Form No. 3324-552

TORO®

Wheel Horse®

8-25 Rear Engine Rider

Model No. 70122—9900001 and Up

Operator's Manual

CE

International English (GB)

Introduction

Thank you for purchasing a Toro product.

All of us at Toro want you to be completely satisfied with your new product, so feel free to contact your local Authorized Service Dealer for help with service, genuine replacement parts, or other information you may require.

Whenever you contact your Authorized Service Dealer or the factory, always know the model and serial numbers of your product. These numbers will help the Service Dealer or Service Representative provide exact information about your specific product. You will find the model and serial number plate located in a unique place on the product as shown below.

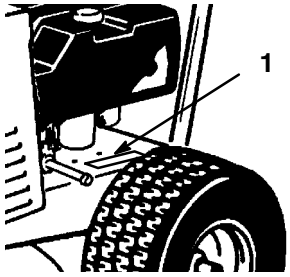

1. Model and Serial Number Plate (on left frame)

For your convenience, write the product model and serial numbers in the space below.

Model No: _____

Serial No. _____

Read this manual carefully to learn how to operate and maintain your product correctly. Reading this manual will help you and others avoid personal injury and damage to the product. Although we design, produce and market safe, state-of-the-art products, you are responsible for using the product properly and safely. You are also responsible for training persons, who you allow to use the product, about safe operation.

The warning system in this manual identifies potential hazards and has special safety messages that help you and others avoid personal injury, even death. DANGER, WARNING and CAUTION are signal words used to identify the level of hazard. However, regardless of the hazard, be extremely careful.

DANGER signals an extreme hazard that will cause serious injury or death if the recommended precautions are not followed.

WARNING signals a hazard that may cause serious injury or death if the recommended precautions are not followed.

CAUTION signals a hazard that may cause minor or moderate injury if the recommended precautions are not followed.

Two other words are also used to highlight information. “Important” calls attention to special mechanical information and “Note” emphasizes general information worthy of special attention.

The left and right side of the machine is determined by sitting on the seat in the normal operator’s position.

©The Toro Comany - 2000
All Rights Reserved

Contents

	Page
Safety	3
Safe Operation Practices for Ride-on (riding) Rotary Lawnmower Machines	3
Safe Operating Practices	3
Sound Pressure Level	5
Sound Power Level	5
Vibration Level	5
Slope Chart	7
Symbols Glossary	9
Gasoline and Oil	12
Recommended Gasoline	12
Using Stabilizer/Conditioner	13
Filling the Fuel Tank	13
Check Engine Oil Level	13
Assembly	14
Loose Parts	14
Install Steering Wheel	15
Install Seat	15
Activate the Battery	16
Fill Crankcase with Oil	17
Check Tire Pressure	17
Operation	18
Think Safety First	18
Controls	18
Gear Shift	18
Deck Engagement Lever (Power take off [PTO])	18
Throttle Control	18
Key Choice™	18
Ignition Switch	18
Height-of-Cut Control	18
Clutch Pedal	19
Brake Pedal	19
Parking Brake	19
Starting and Stopping the Engine	19
Break-In	20
Adjusting Height-of-Cut	20
Operating Procedure	20
The Safety Interlock System	21
Operating-in-Reverse	21
Driving Forward or Backward	23
Stopping the Machine	24
Positioning the Seat	24
Side Discharge	25
Tips for Mowing Grass	25
Tips For Cutting Leaves	26
Maintenance	27
Service Interval Chart	27
Air Cleaner	28
Engine Oil	29
Spark Plug	30
Greasing and Lubrication	31
Tire Pressure	32
Brake	33
Fuel Tank	34
Battery	34
Servicing Cutter Blade	36
Removing/Installing Cutting Unit	38
Replacing Blade Drive Belt	39
Checking/Adjusting Drive Chain	41
Wiring Diagram	43
Cleaning and Storage	44
Washing Underside of Mower	45
Troubleshooting	46

The enclosed Engine Owner's Manual is supplied for information regarding emission systems, maintenance and warranty.
Keep this engine Owner's Manual with your unit. Should this engine Owner's Manual become damaged or illegible, replace immediately. Replacements may be ordered through the engine manufacturer.

Safety

Safe Operation Practices for Ride-on (riding) Rotary Lawnmower Machines

This machine meets or exceeds European Standards in effect at the time of production. However, improper use or maintenance by the operator or owner can result in injury. To reduce the potential for injury, comply with these safety instructions and always pay attention to the safety alert ⚠ symbol, which means CAUTION, WARNING, or DANGER—"personal safety instruction." Failure to comply with the instruction may result in personal injury or death.

Safe Operating Practices

This product is capable of amputating hands and feet and throwing objects. Always follow all safety instructions to avoid serious injury or death.

Training

1. Read the instructions carefully. Be familiar with the controls and the proper use of the equipment.
2. Never allow children or people unfamiliar with these instructions to use the lawnmower. Local regulations may restrict the age of the operator.
3. Never mow while people, especially children, or pets are nearby.
4. Keep in mind that the operator or user is responsible for accidents or hazards occurring to other people or their property.
5. Do not carry passengers.
6. All drivers should seek and obtain professional and practical instruction. Such instruction should emphasize:
   - the need for care and concentration when working with ride-on machines;
   - control of a ride-on machine sliding on a slope will not be regained by the application of the brake. The main reasons for loss of control are:
     - insufficient wheel grip;
     - being driven too fast;
     - inadequate braking;
     - the type of machine is unsuitable for its task;
     - lack of awareness of the effects of ground conditions, especially slopes;
     - incorrect hitching and load distribution.

Preparation

1. While mowing, always wear substantial footwear and long trousers. Do not operate the equipment when barefoot or wearing open sandals.
2. Thoroughly inspect the area where the equipment is to be used and remove all objects which may be thrown by the machine.
3. WARNING – Fuel is highly flammable.
   - Store fuel in containers specifically designed for this purpose.
   - Refuel outdoors only and do not smoke while refuelling.
   - Add fuel before starting the engine. Never remove the cap of the fuel tank or add fuel while the engine is running or when the engine is hot.

- If fuel is spilled, do not attempt to start the engine but move the machine away from the are of spillage and avoid creating any source of ignition until petrol vapors have dissipated.
- Replace all fuel tanks and container caps securely.

4. Replace faulty silencers.

5. Before using, always visually inspect to see that the blades, blade bolts and cutter assembly are not worn or damaged. Replace worn or damaged blades and bolts in sets to preserve balance.

6. On multi-bladed machines, take care as rotating one blade can cause other blades to rotate.

Operation

1. Do not operate the engine in a confined space where dangerous carbon monoxide fumes can collect.

2. Mow only in daylight or in good artificial light.

3. Before attempting to start the engine, disengage all blade attachment clutches and shift into neutral.

4. Use care when pulling loads or using heavy equipment.

- Use only approved drawbar hitch points.
- Limit loads to those you can safely control.
- Do not turn sharply. Use care when reversing.
- Use counterweight(s) or wheel weights when suggested in the instruction handbook.

5. Watch out for traffic when crossing or near roadways.

6. Stop the blades before crossing surfaces other than grass.

7. When using any attachments, never direct discharge of material toward bystanders nor allow anyone near the machine while in operation.

8. Never operate the lawnmower with damaged guards or without safety protective devices in place.

9. Do not change the engine governor settings or overspeed the engine. Operating the engine at excessive speeds may increase the hazard of personal injury.

10. Before leaving the operator's position:

- disengage the power take-off and lower the attachments;
- change into neutral and set the parking brake;
- stop the engine and remove the ignition and "Key Choice" keys.

11. Disengage drive to attachments, stop the engine, and disconnect the spark plug wire(s) or remove the ignition key

- before cleaning blockages or unclogging chute;
- before checking, cleaning or working on the lawnmower;
- after striking a foreign object. Inspect the lawnmower for damage and make repairs before restarting and operating the equipment;
- if the machine starts to vibrate abnormally (check immediately).

12. Disengage drive to attachments when transporting or not in use.

13. Stop the engine and disengage drive to attachment

- before refuelling;
- before removing the grass catcher;

- before making height adjustment unless adjustment can be made from the operator's position.

14. Reduce the throttle setting during engine run-out and, if the engine is provided with a shut-off valve, turn the fuel off at the conclusion of mowing.

Slope Operation

1. For operation on slopes:

- Never mow side hills over 5°
- Never mow uphill over 10°
- Never mow downhill over 15°

2. Remember there is no such thing as a "safe" slope. Travel on grass slopes requires particular care. To guard against overturning:

- do not stop or start suddenly when going up or downhill;
- engage clutch slowly, always keep machine in gear, especially when travelling downhill;
- machine speeds should be kept low on slopes and during tight turns;
- stay alert for bumps and hollows and other hidden hazards;
- never mow across the face of the slope, unless the lawnmower is designed for this purpose.

Maintenance and storage

1. Keep all nuts, bolts and screws tight to be sure the equipment is in safe working condition.

2. Never store the equipment with fuel in the tank inside a building where fumes may reach an open flame or spark.

3. Allow the engine to cool before storing in any enclosure.

4. To reduce the fire hazard, keep the engine, silencer, battery compartment and petrol storage area free of grass, leaves, or excessive grease.

5. Check the grass catcher frequently for wear or deterioration.

6. Replace worn or damaged parts for safety.

7. If the fuel tank has to be drained, this should be done outdoors.

8. On multi-bladed machines, take care as rotating one blade can cause other blades to rotate.

9. When machine is to be parked, stored or left unattended, lower the cutting means unless a positive mechanical lock is used.

Sound Pressure Level

This unit has an equivalent continuous A-weighted sound pressure at the operator ear of: dB(A), based on measurements of identical machines per Directive 84/538/EEC and amendments.

Sound Power Level

This unit has a sound power level of: 100 Lwa, based on measurements of identical machines per procedures outlined in Directive 84/538/EEC and amendments.

Vibration Level

This unit has a maximum hand-arm vibration level of 4.3 m/s^2 and whole body vibration level of 0.5 m/s^2, based on measurements of identical machines per EN 1033 and EN 1032.

Slope Chart

Read all safety instructions on pages 3-11.

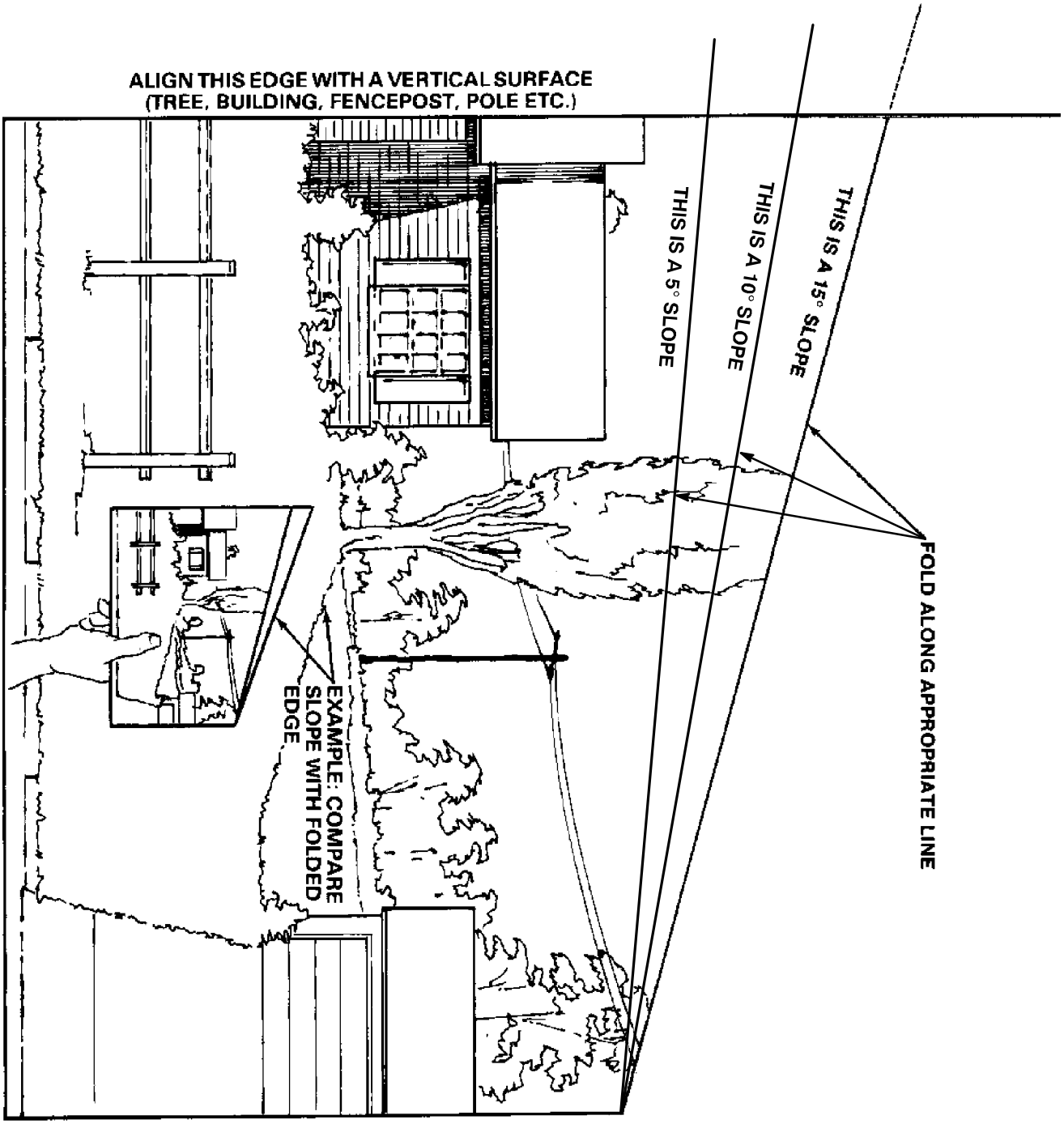

Symbols Glossary

Safety alert symbol



Safety alert symbol



Read operator's manual



Consult Technical Manual for proper service procedures



Thrown or flying objects-Whole body exposure



Thrown or flying objects-Rotary side-mounted mower. Keep deflector shield in place

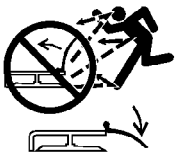

Severing toes or foot-mower blade



Severing fingers or hand-mower blade



Rotating blade can cut off toes or fingers. Stay clear of blade as long as engine is running



Do not open or remove safety shields while engine is running

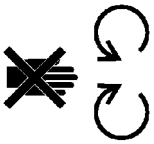

Dismemberment-Mower in rearward motion



Stay a safe distance from the machine

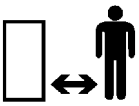

Stay a safe distance from the mower

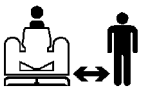

Keep children a safe distance from machine



Machine rollover side hill



Machine rollover up hill



Machine rollover down hill



Machine rollover



Operating in reverse not allowed unless deactivated by Key Choice switch



Symbols Glossary

Cutting element-basic symbol



Cutting element-height adjustment



Cutting unit-lower

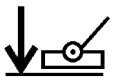

Cutting unit-raised

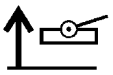

Cutting or entanglement of foot-Rotating auger



Severing of fingers or hand-impeller blade



Keep a safe distance from snowthrower



Stay a safe distance from the snowthrower



Tractors must be equipped with 45kg rear wheel weight with this attachment installed



Machine rollover ROPS snowthrower



Severing of hand-Rotating knives



Severing of foot-Rotating knives



Riding on this machine is allowed only on a passenger seat & only if the driver's view is not hindered



Crushing of fingers or hands-Force applied from side



Kickback or upward motion-Stored energy



Shut off engine & remove key before performing maintenance or repair work



Machine travel direction-combined



Low L

High H

Reverse R

Neutral N

First gear 1

Second gear 2

Third gear up to maximum # of forward gears 3

Symbols Glossary

Fast

Slow

Decreasing/Increasing

On/Run

Off/Stop

Engine

Engine start

Engine stop

Choke

Engine temperature

Engine lubricating oil pressure

Engine lubricating oil level

Key Choice Switch

Fuel

Fuel level

Volume empty

Volume full

Battery charging conditin

**Head lights-
Main/high beam**

Brake system

Parking brake

Clutch

PTO (Power Take Off)

Engage

Disengage

Unlock

Lock

Gasoline and Oil

Recommended Gasoline

Use UNLEADED Regular Gasoline suitable for automotive use (85 pump octane minimum). Leaded regular gasoline may be used if unleaded regular is not available.

IMPORTANT: Never use methanol, gasoline containing methanol, or gasohol containing more than 10% ethanol because the fuel system could be damaged. Do not mix oil with gasoline.

⚠ DANGER

POTENTIAL HAZARD
- **In certain conditions gasoline is extremely flammable and highly explosive.**

WHAT CAN HAPPEN
- **A fire or explosion from gasoline can burn you, others, and cause property damage.**

HOW TO AVOID THE HAZARD
- **Use a funnel and fill the fuel tank outdoors, in an open area, when the engine is cold. Wipe up any gasoline that spills.**
- **Do not fill the fuel tank completely full. Add gasoline to the fuel tank until the level is 1/4" to 1/2" (6 mm to 13 mm) below the bottom of the filler neck. This empty space in the tank allows gasoline to expand.**
- **Never smoke when handling gasoline, and stay away from an open flame or where gasoline fumes may be ignited by a spark.**
- **Store gasoline in an approved container and keep it out of the reach of children. Never buy more than a 30-day supply of gasoline.**

⚠ DANGER

POTENTIAL HAZARD
- **In certain conditions gasoline is extremely flammable and highly explosive.**

WHAT CAN HAPPEN
- **A fire or explosion from gasoline can burn you, others, and cause property damage.**

HOW TO AVOID THE HAZARD
- **Always place gasoline containers on the ground away from your vehicle before filling.**
- **Do not fill gasoline containers inside a vehicle or on a truck or trailer bed because interior carpets or plastic truck bed liners may insulate the container and slow the loss of any static charge.**
- **When practical, remove gas-powered equipment from the truck or trailer and refuel the equipment with its wheels on the ground.**
- **If this is not possible, then refuel such equipment on a truck or trailer from a portable container, rather than from a gasoline dispenser nozzle.**
- **If a gasoline dispenser nozzle must be used, keep the nozzle in contact with the rim of the fuel tank or container opening at all times until fueling is complete.**

Using Stabilizer/Conditioner

Use a fuel stabilizer/conditioner in the machine to provide the following benefits:

- Keeps gasoline fresh during storage of 90 days or less. For longer storage, drain the fuel tank.
- Cleans the engine while it runs
- Eliminates gum-like varnish buildup in the fuel system, which causes hard starting

IMPORTANT: Do not use fuel additives containing methanol or ethanol.

Add the correct amount of gas stabilizer/conditioner to the gas.

Note: A fuel stabilizer/conditioner is most effective when mixed with fresh gasoline. To minimize the chance of varnish deposits in the fuel system, use fuel stabilizer at all times.

Filling the Fuel Tank

1. Shut the engine off and set the parking brake.
2. Clean around fuel tank cap and remove the cap. Add unleaded regular gasoline to fuel tank, until the level is 1/4 to 1/2 inch (6 mm to 13 mm) below the bottom of the filler neck. This space in the tank allows gasoline to expand. Do not fill the fuel tank completely full.
3. Install fuel tank cap securely. Wipe up any gasoline that may have spilled.

Check Engine Oil Level

Before you start the engine and use the machine, check the oil level in the engine crankcase; refer to Checking Oil Level, page 29.

Assembly

Loose Parts

Note: Use the chart below to verify all parts have been shipped.

DESCRIPTION	QTY.	USE
Seat Clamp Washer Capscrew	1 1 4 4	Install seat.
Steering Wheel Roll Pin Spacer	1 1 1	Install steering wheel.
Key	2	Use in ignition and “key choice” switch.
Capscrew, 1/4-20 x 3/4″ Wing Nut, 1/4 x 20	2 2	Secure battery cables to battery.
Operator‘s Manual	1	Read manual before operating rider.
Registration Card	1	Fill out and mail to Toro.
Hang Tag	1	Read for warranty information.

Install Steering Wheel

1. Position wheels in straight ahead direction.
2. Slip spacer onto steering shaft until groove in spacer fits over roll pin in shaft (Fig. 1).
3. Slip steering wheel over shaft and line the steering wheel mount hole with the shaft mounting hole (Fig. 1). Toro logo on steering wheel insert should be readable from operator's position.

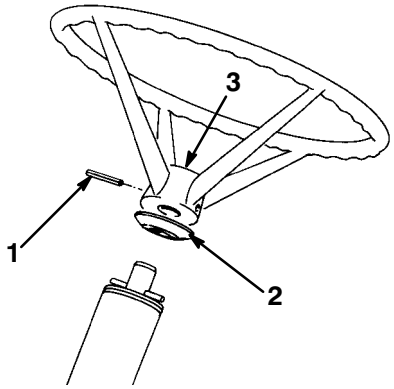

Figure 1

1. Roll pin
2. Spacer
3. Steering wheel insert

4. Insert a drift punch partially through the holes to maintain alignment and insert the roll pin in from the opposite side.
5. Drive the roll pin in until it is flush with the outside of the wheel (Fig. 1).

Install Seat

1. Position seat onto seat base, inserting the seat switch cable through the slot and aligning the mounting holes (Fig. 2).
2. Slide wire clamp over seat switch wire (Fig. 2).
3. Using left front mounting slot in seat base, loosely secure wire clamp and seat to seat base with a capscrew and lock washer (Fig. 2).
4. Mount seat to seat base with (3) remaining capscrews and lock washers.

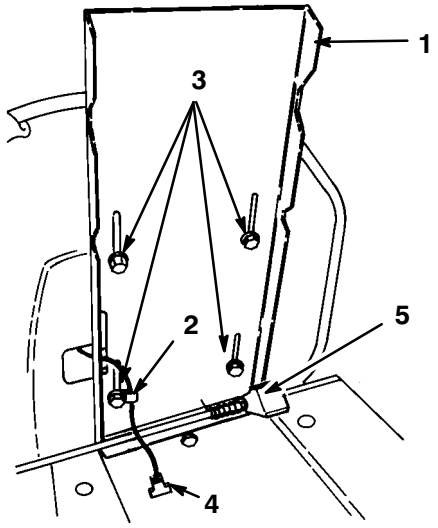

Figure 2

1. Seat base
2. Clamp
3. Capscrews and washers
4. Connector
5. Seat prop latch

Note: Seat may be adjusted for operator comfort by positioning seat as desired in seat base slots.

5. Tighten all locknuts.
6. Insert seat switch connector into wire harness connector.

Activate the Battery

The battery must be removed from the machine so it can be filled with electrolyte and charged. Bulk electrolyte with 1.260 specific gravity must be purchased from a local battery supply outlet. Remove the battery and activate it as follows:

1. Remove wing nut securing battery hold downs to rider chassis (Fig. 3).

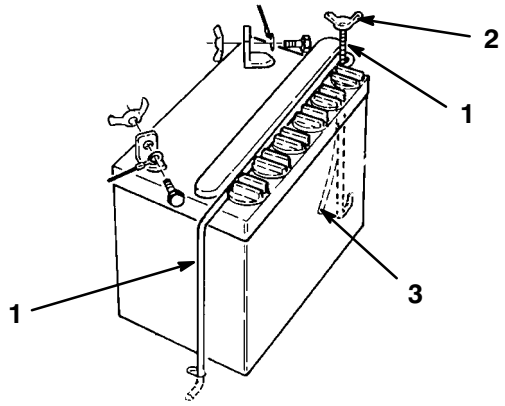

Figure 3

1. Battery hold-down
2. Wing nut
3. Vent tube

2. Remove battery from chassis and set it aside.

3. Remove filler caps from battery and slowly fill each cell until electrolyte is just above the "LOWER" fill line.

4. Leave filler caps off and connect a 3-4 amp battery charger to battery posts. Charge battery at a rate of 4 amperes or less for 4 hours (12 volt).

⚠ WARNING

POTENTIAL HAZARD
- **Charging battery produces gasses.**

WHAT CAN HAPPEN
- **Battery gasses can explode.**

HOW TO AVOID THE HAZARD
- **Keep cigarettes, sparks and flames away from battery.**

5. When battery is charged, disconnect charger from electrical outlet and battery posts.

6. Slowly add electrolyte or distilled water to each cell until level is just below the "UPPER" fill line. Reinstall filler caps. Once battery is in service, distilled water only should be added; never add more electrolyte.

   IMPORTANT: Do not overfill battery. Electrolyte will overflow onto other parts and severe corrosion and deterioration will result.

7. Install the battery with the terminal posts toward the inside of the machine and vent tube thru hole in the frame.

8. Reinstall battery hold downs.

⚠ WARNING

POTENTIAL HAZARD
- **The battery terminals could short against the battery hold-down or metal tractor components.**

WHAT CAN HAPPEN
- **Sparks can cause the battery gasses to explode.**

HOW TO AVOID THE HAZARD
- **When removing or installing the battery, do not allow the battery terminals to touch any metal parts of the tractor.**
- **Always keep the battery hold-down rods in place to protect and secure the battery.**

9. Install the red positive cable to the positive (+) terminal and the negative cable (black) to the negative (–) terminal of the battery and secure with capscrews and wing nuts.

Fill Crankcase with Oil

The rider is shipped from the factory without oil in the crankcase.

1. Place rider on a level surface.

2. Unscrew and remove the dipstick from the oil fill tube (Fig. 4).

3. Insert a funnel into the tube and slowly add engine oil into the crankcase, using oil fill chart below. Use a high quality detergent oil classified "For Service SF, SG, SH". Oil viscosity (weight) must be selected according to anticipated ambient temperature. See table below.

4. **Oil Fill Chart**

8–25	Rear Engine Rider	36 (1.06 l) ounces of oil

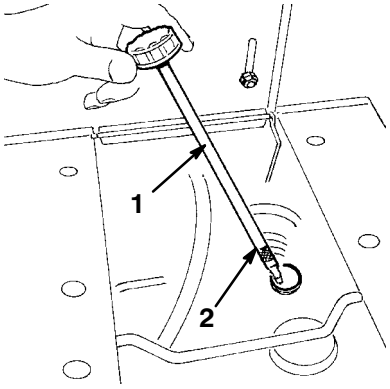

Figure 4

1. Dipstick 2. Full mark

USE THESE SAE VISCOSITY OILS

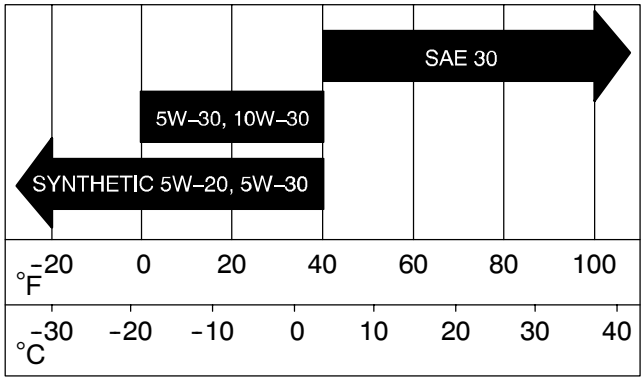

5. Ensure the oil level is to the full mark on the dipstick when it is fully installed. Do not overfill or engine damage may result.

6. Insert the dipstick and turn it clockwise to secure it in the fill tube.

Note: Check the oil level every 5 operating hours or each time rider is used. Initially, drain the oil and replace it after the first 5 hours of operation to remove the contaminants produced by normal engine break-in; thereafter, under normal conditions, change oil after every 25 hours of operation. Change the oil more frequently when the engine is operated in dusty or dirty conditions.

Check Tire Pressure

1. Check the front and rear tires for proper inflation; refer to Operator's Manual, maintenance section under Tire Pressure.

Operation

Think Safety First

Please carefully read all the safety instructions on pages 3-11. Knowing this information could help you, your family, pets or bystanders avoid injury.

Controls

Become familiar with all the controls (Fig. 5) before you start the engine and operate the machine.

Gear Shift

(Fig. 5)—Transaxle has five forward speeds, neutral and reverse. The gear shift lever is located at right side of operator. An interlock switch prevents engine from being started when transaxle is in any gear except neutral.

Deck Engagement Lever (Power take off [PTO])

(Fig. 5)—Engages and disengages the cutter blade. An interlock switch prevents engine from starting when control is in the ENGAGE position. Engine will start when control is in DISENGAGE position only.

Throttle Control

(Fig. 5)—Connects to and operates carburetor mounted throttle and choke. Control has four positions: IDLE, HOT RESTART, OPERATE and CHOKE. Push control slightly to the left and upward to obtain CHOKE position.

Key Choice™

(Fig. 5)—Turn and release switch used for deactivating the "Operating-In-Reverse" interlock feature. Located on the right hand side panel, below and to the rear of the seat.

Ignition Switch

(Fig. 5)—Switch is part of engine ignition system, and it has three positions: OFF, ON and START. Key automatically returns to ON position from START position when released after engine starts.

Height-of-Cut Control

(Fig. 5)—Control varies the cutting height from approximately 1-1/2 to 3-1/2 inches (38 to 89 mm) in five increments.

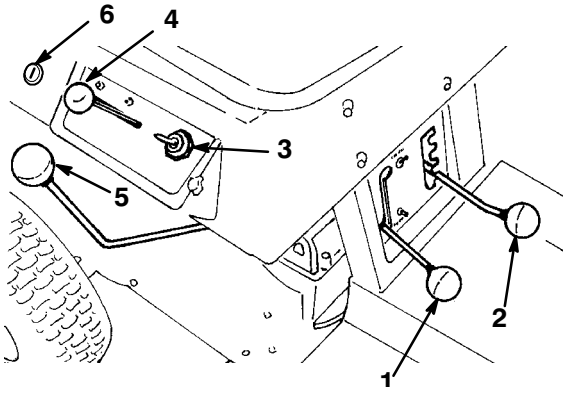

Figure 5

1. Deck engagement lever (PTO)
2. Height-of-cut control
3. Ignition switch
4. Throttle control
5. Gear shift
6. "Key choice" switch

Clutch Pedal

(Fig. 6)—Used in conjunction with gear shift. Depress clutch pedal fully when shifting gears and whenever brake is used.

Brake Pedal

(Fig. 6)—Must be depressed to slow down or stop the rider. When pedal is depressed, a caliper engages the brake disc at side of transaxle. Remember to depress clutch pedal when using brake.

Note: Avoid depressing brake pedal while clutch is engaged because premature brake wear will occur. Do not rest foot on pedal while mowing.

Parking Brake

Always set the parking brake when you stop the machine or leave it unattended.

(Fig. 6)—Parking brake must be used in conjunction with brake pedal. When pedal is depressed, end of parking brake lever holds brake pedal in depressed position and a caliper engages the brake disc at side of transaxle.

Setting the Parking Brake

1. Depress brake pedal fully and shift transaxle to neutral.
2. Move parking brake control sideward and release brake pedal.

Releasing the Parking Brake

1. To release the parking brake, depress brake pedal, and parking brake lever will return it to its disengaged position. Release brake pedal slowly.

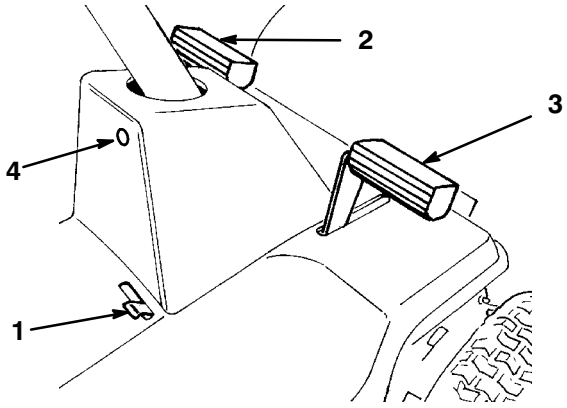

Figure 6

1. Parking brake
2. Clutch pedal
3. Brake pedal
4. Operating-in-Reverse light

Starting and Stopping the Engine

Starting

1. Shift into neutral (N), move deck engagement lever to DISENGAGE. Lock the parking brake.

   Note: An interlock switch on the transmission and deck engagement (PTO) prevents the engine from starting unless the operator is sitting on the seat, the gear shift is in neutral and the deck engagement lever is in the DISENGAGE detent.

2. Move the throttle control to CHOKE position (Fig. 5) when starting a cold engine. However, a hot engine requires no choking. Move throttle to FAST position for starting.

3. Rotate ignition key (Fig. 5) to START position. When engine starts, release the key and move throttle between FAST and SLOW if choke was used for starting. Operate the rider with throttle control in FAST (full throttle) position for best performance.

4. Select desired height-of-cut and move deck engagement lever to ENGAGE. Release parking brake (if necessary), depress clutch pedal and shift into gear.

5. Release clutch pedal slowly and smoothly.

Stopping

1. Depress clutch and brake pedals, move throttle control lever to SLOW position, move deck engagement lever to DISENGAGE.

2. Shift transaxle to neutral and engage parking brake. Rotate the ignition key to OFF.

3. Remove the ignition and "key choice" keys. Wait for all moving parts to stop before getting off seat.

Break-In

The engine requires no special break-in other than changing oil after the first five hours of operation. Operate the transaxle in all gears to ensure that drive system is functioning correctly. After the first five hours of operation, check the condition of the belts.

Adjusting Height-of-Cut

The height-of-cut may be set in one of five positions from approximately 1-1/2 to 3-1/2 inches (38 to 89 mm).

1. Ensure the deck engagement (PTO) lever is in DISENGAGE position.

2. Move height-of-cut control into desired setting.

3. To engage blade for cutting, move deck engagement lever to ENGAGE.

Operating Procedure

1. Move the deck engagement (PTO) lever to DISENGAGE.

2. Start the engine: refer to Starting/Stopping Instructions, page 19.

   IMPORTANT: When rider is used for the first time, operate the transaxle in all gears to ensure that drive system is functioning correctly, and become familiar with the controls and operating characteristics. Never shift while the machine is moving or without first depressing the clutch pedal; transaxle damage could result.

3. Depress clutch pedal and shift transaxle into selected gear. Then release pedal slowly until traction drive engages.

   IMPORTANT: To avoid a jerky start and putting a heavy load on the transaxle, release clutch pedal slowly. If shifting into reverse gear is difficult, jog clutch pedal in and out to get gears to mesh. Do not force the gear shift because damage may result. Should you encounter a jerking or grabbing condition during operation, contact your local Authorized TORO Service Dealer for assistance.

4. To engage blade for cutting, move height-of-cut control to the desired setting. Place throttle in OPERATE position. Then move deck engagement (PTO) lever to ENGAGE position.

5. To stop engine, in sequence, depress clutch and brake pedals, move throttle control to IDLE, deck engagement lever into DISENGAGE, gear shift into neutral, engage parking brake, and rotate the ignition key to OFF position after allowing the engine to idle a short period.

The Safety Interlock System

Understanding the Safety Interlock System

The safety interlock system is designed to prevent the engine from starting unless:

- The power take off (PTO) is “OFF.”
- The gear shift lever is in “N” neutral.

The safety system is designed to stop the engine if:

- You rise from the seat when the clutch/brake pedal is released.
- You rise from the seat when the blade (PTO) is “ENGAGED.”
- You shift into reverse with the power take off (PTO) engaged and the operating-in-reverse interlock not deactivated.

Operating-in-Reverse

An interlock feature is provided that prevents the Power Take Off (PTO) from operating while the tractor is traveling in reverse. If the unit is shifted into reverse while the mower blade or other PTO driven attachment is engaged, the engine will stop.

Do not mow while backing up unless it is absolutely necessary. If you need to mow while in reverse gear or use other PTO driven attachments (such as a snowthrower), this no operating-in-reverse interlock may be temporarily deactivated.

Before deactivating this interlock, be sure there are no children present on or near the property where you are using the tractor, and that none are likely to appear while you are mowing or operating an attachment. Be extra observant after you have chosen to deactivate the interlock because the sound of the tractor’s engine might prevent you from being aware that a child or a bystander has entered the area where you are operating the tractor.

If you are certain that you can safely mow in reverse or operate an attachment, deactivate the no operating-in-reverse interlock by turning the “Key Choice” switch (Fig. 7), located on the seat bracket on the right hand side just below the seat, after engaging the blade (PTO). A red light on the front console (Fig. 8) will turn on as a reminder that the no operating-in-reverse interlock has been deactivated. Once the interlock is deactivated it stays in this mode—with your mower blade or PTO-driven attachment operating whenever you back up—and the console light stays on until either the blade (PTO) is disengaged, or the engine is turned off.

Note: Do not insert the “Key Choice” key unless it is absolutely necessary to mow in reverse or operate an attachment. The “Key Choice” key should also be removed from the unit if it will be operated by someone other than a responsible, experienced operator. This will prevent the unit from operating in reverse with the mower blade or other PTO attachment engaged. Always remove both the ignition and the “Key Choice” keys and put them in a safe place out of the reach of children when leaving the unit unattended.

⚠ DANGER

POTENTIAL HAZARD

- **A child or bystander could be backed over by a riding mower with its blade(s) engaged.**

WHAT CAN HAPPEN

- **Blade contact will cause serious personal injury or death.**

HOW TO AVOID THE HAZARD

- **Do not mow in reverse unless absolutely necessary.**
- **Always look backward and down before backing up.**
- **Use "Key Choice" switch only if you are certain no children or other bystanders will appear in the mowing area.**
- **Always remove both the ignition and "Key Choice" keys and put them in a safe place out of the reach of children or unauthorized users when leaving the unit unattended.**

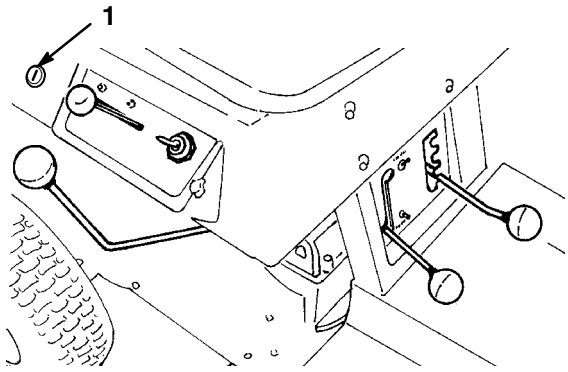

Figure 7

1. "Key choice" switch

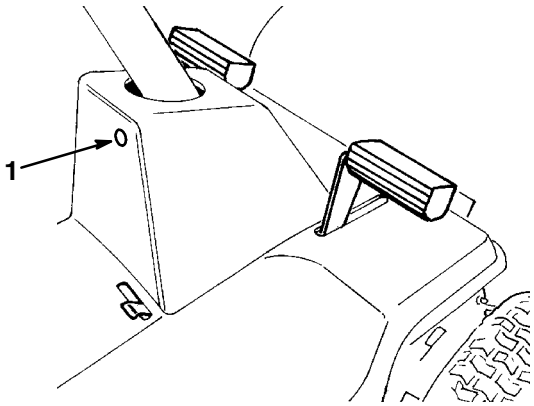

Figure 8

1. Operating–in–Reverse light

Testing the Safety Interlock System

Test the safety interlock system before you use the machine each time. If the safety system does not operate as described below, have an Authorized Service Dealer repair the safety system immediately.

1. Move gear shift into neutral.

2. Move the deck engagement lever into ENGAGE. Sit on the seat and rotate ignition key to START. Engine should not crank; but if it does, the interlock system is malfunctioning and it must be repaired by an Authorized TORO Service Dealer. If the engine does not crank, proceed to step 3.

3. Move deck engagement lever into DISENGAGE. Sit on the seat, depress the brake and clutch pedals, engage the parking brake and shift into gear. Rotate ignition key to START. Engine should not crank; but if it does, the interlock system is malfunctioning and must be repaired by an Authorized TORO Service Dealer. If engine does not crank, proceed to step 4.

4. Sit on the seat, move gear shift into neutral, deck engagement lever into DISENGAGE and ensure parking brake is engaged. Rotate ignition key to START. Engine should start and continue to run. Then engage deck engagement lever and carefully raise off the seat: the engine should stop. If engine does not stop running, shut engine off and have interlock system repaired by an Authorized TORO Service Dealer. If engine shuts off when you raised off the seat, the interlock system is functioning correctly and the rider can be operated safely.

5. Put the PTO lever in the “disengage” position and the gear shifter in neutral. Now start the engine. While the engine is running, move the PTO lever to the “engage” position, push in the clutch and put the gear shifter in reverse. The engine should stop.

6. Put the PTO lever in the “disengage” position and the gear shifter in neutral. Now start the engine. Move the PTO lever to the “engage” position and turn the “Key Choice” key and release. The “Key Choice” warning light should illuminate. Move the PTO lever to the “disengage” position and the “Key Choice” warning light should turn off.

Driving Forward or Backward

The throttle control regulates the engine speed as measured in rpm (revolutions per minute). Place the throttle control in the “FAST” position for best performance while mowing.

To go forward push the clutch in and place the gear shifter in a forward gear, release the parking brake: refer to Releasing the Parking Brake, page 19 and slowly release the clutch. To go in reverse push the clutch in to stop and after stopping completely, place the gear shifter in reverse. Slowly release the clutch.

Note: For reverse motion, with the PTO engaged, the operating-in-reverse feature must be deactivated by the “key choice” switch located on the right hand side panel just below and to the rear of the seat.

Stopping the Machine

To stop the machine, push the clutch in and shift to neutral (“N”). Disengage the power take off (PTO), and turn the ignition key to “OFF” to stop the engine. Also set the parking brake if you leave the machine unattended; refer to Setting the Parking Brake, page 19. Remember to remove the keys from the ignition and “key choice” switches.

⚠ CAUTION

POTENTIAL HAZARD

- **Someone could move or attempt to operate the tractor while it is unattended.**

WHAT CAN HAPPEN

- **Children or bystanders may be injured if they use the tractor.**

HOW TO AVOID THE HAZARD

- **Always remove the ignition and “key choice” keys and set the parking brake when leaving the machine unattended, even if just for a few minutes.**

IMPORTANT: To prevent brake wear, do not “Ride the Brakes.” Shift to a lower speed for slower ground speed. Choose a slow speed so that you will not have to stop or shift while on the slope.

Positioning the Seat

The seat can move forward and backward. Position the seat where you have the best control of the machine and are most comfortable.

1. Raise the seat and loosen the lock nuts (Fig. 9).
2. Slide the seat to the desired position and tighten the lock nuts.

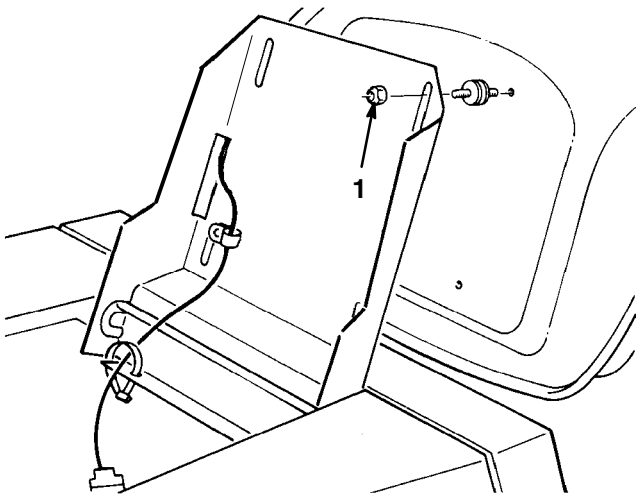

Figure 9

1. Lock nuts

Side Discharge

The mower has a hinged grass deflector that disperses clippings to the side and down toward the turf.

⚠ DANGER

POTENTIAL HAZARD

- **Without the grass deflector or complete grass catcher assembly mounted in place, you and others are exposed to blade contact and thrown debris.**

WHAT CAN HAPPEN

- **Contact with rotating mower blade(s) and thrown debris will cause injury or death.**

HOW TO AVOID THE HAZARD

- **NEVER remove the grass deflector from the mower because the grass deflector routes material down toward the turf. If the grass deflector is ever damaged, replace it immediately.**
- **Never put your hands or feet under the mower.**
- **Never try to clear discharge area or mower blades unless you move the power take off (PTO) to "OFF" and rotate the ignition key to "OFF." Also remove the ignition key and pull the wire(s) off the spark plug(s).**

Tips for Mowing Grass

Fast Throttle Setting

For best mowing and maximum air circulation, operate the engine at "FAST." Air is required to thoroughly cut grass clippings, so do not set the height-of-cut so low as to totally surround the mower by uncut grass. Always try to have one side of the mower free from uncut grass, which allows air to be drawn into the mower.

Using the Mower for the First Time

Cut grass slightly longer than normal to ensure the cutting height of the mower does not scalp any uneven ground. However, the cutting height used in the past is generally the best one to use. When cutting grass longer than six inches tall, you may want to cut the lawn twice to assure an acceptable quality-of-cut.

Cut 1/3 of the Grass Blade

It is best to cut only about 1/3 of the grass blade. Cutting more than that is not recommended, unless grass is sparse or it is late fall when grass grows more slowly.

Mowing Direction

Alternate mowing direction to keep the grass standing straight. This also helps disperse clippings which enhances decomposition and fertilization.

Mow at Correct Intervals

Normally, mow every four days. But remember, grass grows at different rates at different times. So to maintain the same cutting height, which is a good practice, mow more often in early spring. As the grass growth rate slows in mid summer, mow less frequently. If you cannot mow for an extended period, first mow at a high cutting height; then mow again two days later at a lower height setting.

Ground Speed

To improve cut quality, use slower ground speed.

Avoid Cutting Too Low

If the cutting width of the mower is wider than the mower you previously used, raise the cutting height one notch to ensure uneven turf is not cut too short.

Long Grass

If the grass is ever allowed to grow slightly longer than normal, or if it contains a high degree of moisture, raise the cutting height higher than usual and cut the grass at this setting. Then cut the grass again using the lower, normal setting.

When Stopping

If the machine's forward motion must be stopped while mowing, a clump of grass clippings may drop onto your lawn. To avoid this:

1. With the blade(s) "ENGAGED," move onto a previously cut area.
2. To disperse the clippings evenly, raise the mower one or two height-of-cut settings while driving forward with the blade(s) "ENGAGED."

Keep the Underside of the Mower Clean

Use the washout port to clean clippings and dirt from the underside of the mower after each use. If grass and dirt build up inside the mower, cutting quality will eventually become unsatisfactory.

Blade Maintenance

Maintain a sharp blade throughout the cutting season because a sharp blade cuts cleanly without tearing or shredding the grass blades. Tearing and shredding turns grass brown at the edges, which slows growth and increases the chance of disease. Every 30 days, check the cutter blade(s) for sharpness and file down any nicks.

Tips For Cutting Leaves

In the fall, you can cut your leaves up into finely cut particles and inject the particles down into the grass. When spring arrives, the leaf particles will have decomposed and restored valuable nutrients to the soil.

- When cutting is complete, always be sure that 50% of the lawn shows through the finely cut leaf cover. This may require one or more passes over the leaves.
- If there are more than five inches of leaves on lawn, raise the deck one or two notches higher. This makes it easier to feed leaves under mower deck.
- If leaves are not cut up finely enough to be hidden down in the grass, make a second pass 90 degrees to the first pass.
- If you cut up a lot of oak leaves, you might want to add lime to your grass in the spring. Lime reduces the acidity of oak leaves.

Maintenance

Service Interval Chart

Service Operation	5 Hours	25 Hours	Storage Service	Spring Service	2 Years	Notes
Change Oil (Initial)	X					
Change Oil (Periodic)		X	X			
Check Safety Interlock	X	X		X	X	Before each use
Check Cutter Blade	X	X	X			
Check Brake	X		X	X		
Grease Front Axle Spindles		X	X			More often in dusty, dirty, conditions
Lubricate Pivot Points		X	X			
Service Air Cleaner		X	X			
Check Spark Plug		X	X	X		
Check Blade Drive Belt			X			
Check Traction Drive Belt			X			
Check Drive Chain	X	X	X			More often in dusty, dirty, conditions
Drain Gasoline			X			
Clean Outside of Engine		X	X			
Clean Mower Housing	X		X			
Clean Blower Screen On Engine		X	X	X		
Paint Chipped Surfaces			X			
Replace Interlock Switches					X	

⚠ CAUTION

POTENTIAL HAZARD

- **If you leave the key in the ignition switch, someone could start the engine.**

WHAT CAN HAPPEN

- **Accidental starting of the engine could seriously injure you or other bystanders.**

HOW TO AVOID THE HAZARD

- **Remove the key from the ignition switch and pull the wire(s) off the spark plug(s) before you do any maintenance. Also push the wire(s) aside so it does not accidentally contact the spark plug(s).**

Air Cleaner

Service Interval/Specification

Foam Element: Clean and re-oil after every 25 operating hours, or yearly, whichever occurs first. Paper Element: Replace after every 100 operating hours or yearly, whichever occurs first. Service the air cleaner more frequently (every few hours) if operating conditions are extremely dusty or sandy.

1. Remove the wire from the spark plug (Fig. 15).

2. Remove the knob and air cleaner cover (Fig. 12).

3. Every 25 hours the foam pre-cleaner should be cleaned (Fig. 12). Remove foam pre-cleaner by sliding it off the paper cartridge (Fig. 12).

A. Wash the foam pre-cleaner in liquid soap and warm water. Rinse thoroughly in clear water.

B. Wrap the foam pre-cleaner in cloth and squeeze it dry

C. Saturate the foam in engine oil. Squeeze it to remove excess oil.

4. The paper air cleaner cartridge should be replaced every 100 hours. Remove the nut from the top of the paper cartridge (Fig. 12).

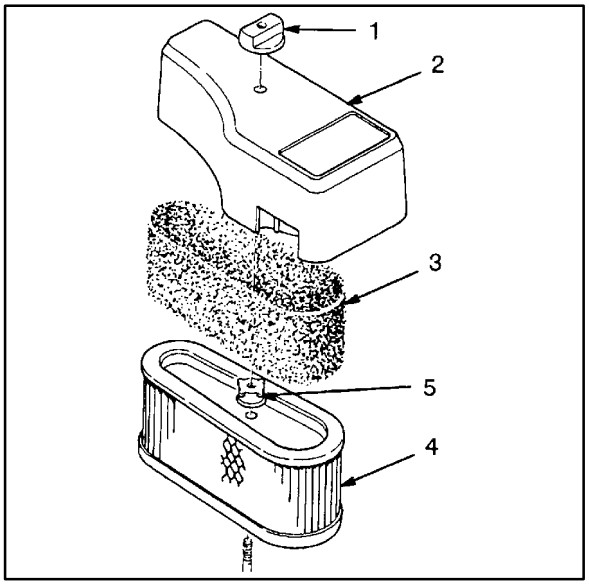

Figure 12

1. Knob
2. Air cleaner cover
3. Foam pre-cleaner
4. Paper cartridge
5. Nut

5. Clean the air cleaner body carefully to prevent dirt from entering carburetor. Remove and discard the paper cartridge.

6. Insert a new paper cartridge into the air cleaner body. Reassemble the air cleaner.

IMPORTANT: Petroleum solvents, such as kerosene, are not to be used to clean the paper cartridge. They may cause deterioration of the cartridge. DO NOT OIL THE CARTRIDGE. DO NOT USE PRESSURIZED AIR TO CLEAN THE CARTRIDGE.

IMPORTANT: Always operate the engine with the air cleaner element in place or engine damage will result.

Engine Oil

Service Interval/Specification

Change oil:

- After the first 5 operating hours.
- After every 25 operating hours.

Note: Change oil more frequently when operating conditions are extremely dusty or sandy.

Oil Type: Detergent oil (API service SF, SG, SH)

Crankcase Capacity: 36 oz. (1.06 l)

Viscosity: See table below

USE THESE SAE VISCOSITY OILS

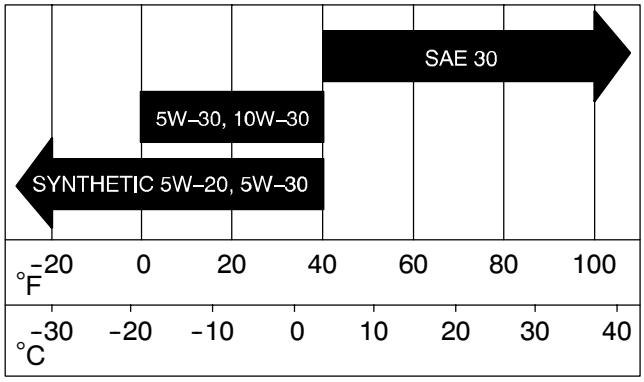

Checking Oil Level

1. Park the machine on a level surface, disengage the power take off (PTO), set the parking brake, and turn the ignition key to “OFF” to stop the engine. Remove the key.
2. Clean around the oil dipstick (Fig. 13) so dirt cannot fall into the filler hole and damage the engine.
3. Unscrew the oil dipstick and wipe the metal end clean (Fig. 13).
4. Screw dipstick fully into filler neck; then remove it and check oil level on dipstick. If level is low, add only enough oil to raise level to FULL mark. Do not overfill or engine damage may result.

IMPORTANT: Do not overfill the crankcase with oil because the engine may be damaged.

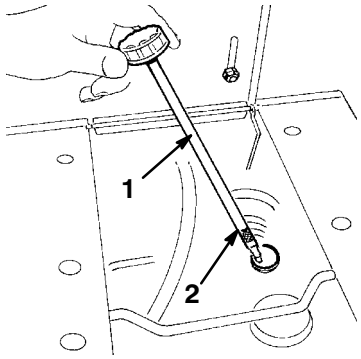

Figure 13

1. Oil dipstick 2. Full mark

Changing/Draining Oil

1. Start the engine and let it run five minutes. This warms the oil so it drains better.
2. Park the machine so that the drain side is slightly lower than the opposite side to assure the oil drains completely. Then disengage the power take off (PTO), set the parking brake, and turn the ignition key to “OFF” to stop the engine. Remove the ignition and “Key Choice” key.
3. Move the PTO into DISENGAGE detent and set height-of-cut in lowest position.
4. Place a drain pan below drain plug (Fig. 14). Remove drain cap. Allow all oil to flow into drain pan.
5. Reinstall drain cap after oil stops flowing.

Note: Dispose of the used oil at a certified recycling center.

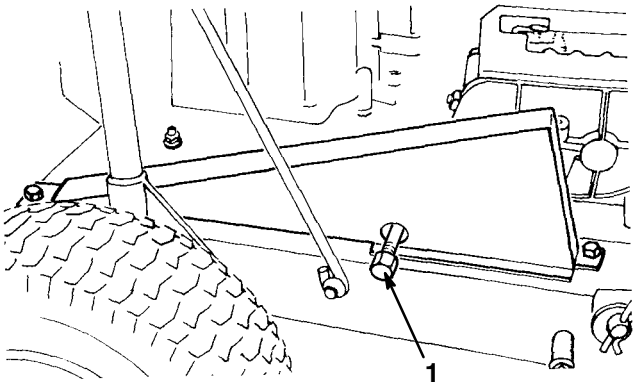

Figure 14

1. Drain cap

6. Unscrew dipstick and add oil to crankcase. Refer to Fill Crankcase With Oil, page 17. Crankcase capacity is 36 oz. (1.06 l). **Do not overfill** or engine damage may result.

Spark Plug

Service Interval/Specification

Since air gap between center and side electrodes of the spark plug increases gradually during normal operation of the engine, check condition of electrodes after every 25 operating hours. Recommended air gap is 0.030 of an inch (0.762 mm). Correct spark plug to use is: Champion RJ-19LM.

Note: The spark plug usually lasts a long time; however, the plug should be removed and checked whenever the engine malfunctions.

Removing the Spark Plug(s)

1. Disengage the power take off (PTO), set the parking brake, and turn the ignition key to "OFF" to stop the engine. Remove the ignition key.

2. Pull the wire off the spark plug (Fig. 15).

3. Clean area around spark plug so foreign matter cannot fall into cylinder when spark plug is removed.

4. Remove the spark plug(s).

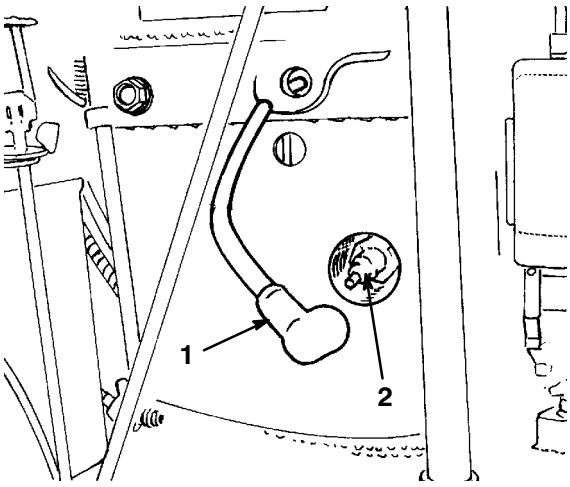

Figure 15

1. Spark plug wire 2. Spark plug

Checking the Spark Plug

1. Look at the center of the spark plug(s) (Fig. 16). If you see light brown or gray on the insulator, the engine is operating properly. A black coating on the insulator usually means the air cleaner is dirty.

   IMPORTANT: Never clean the spark plug(s). Always replace the spark plug(s) when it has: a black coating, worn electrodes, an oily film, or cracks.

2. Check the gap between the center and side electrodes (Fig. 16). Bend the side electrode (Fig. 16) if the gap is not correct.

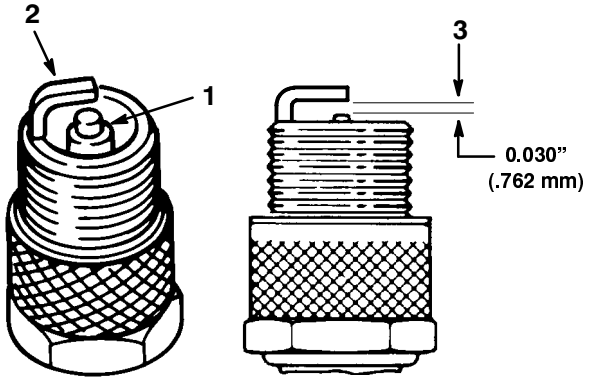

Figure 16

1. Center electrode insulator
2. Side electrode
3. Air gap (not to scale)

Installing the Spark Plug(s)

1. Install the spark plug(s). Make sure the air gap is set correctly.
2. Tighten the spark plug(s) to 15 ft-lb (20.4 Nm).
3. Push the wire(s) onto the spark plug(s) (Fig. 15).

Greasing and Lubrication

Service Interval/Specification

Grease the machine after every 25 operating hours or yearly, whichever occurs first. Grease more frequently when operating conditions are extremely dusty or sandy.

Grease Type: General-purpose grease.

How to Grease

1. Disengage the power take off (PTO), set the parking brake, and turn the ignition key to "OFF" to stop the engine. Remove the ignition keys.
2. Clean the grease fittings with a rag. Make sure to scrape any paint off the front of the fitting(s).
3. Connect a grease gun to the fitting. Pump grease into the fittings until grease begins to ooze out of the bearings.
4. Wipe up any excess grease.

Where to Add Grease

1. Lubricate the front wheels and spindles until grease begins to ooze out of the bearings (Fig. 17).

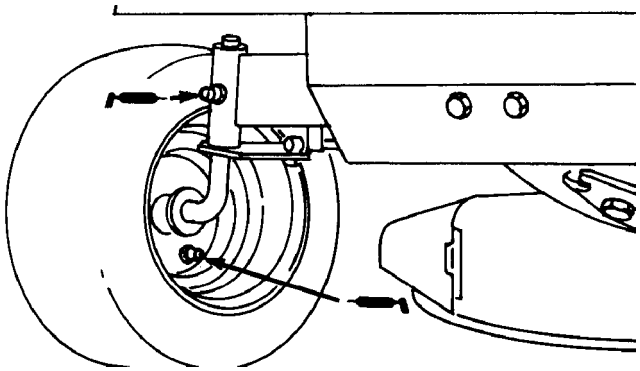

Figure 17

2. The rear wheels should be removed and axles greased once a year to prevent the formation of rust and to simplify future wheel removal.

Lubricate Pivot Points

The mechanical pivot points on the rider must be oiled after every 25 hours of operation; lubricate more frequently when conditions are dusty or sandy.

IMPORTANT: To lubricate all the mechanical pivot points, the rider must be tipped on its rear end. However, before the rider is tipped, drain all gasoline from fuel tank and oil from crankcase. Also remove battery so acid does not spill on the rider.

1. Drain gasoline from fuel tank; refer to Draining Gasoline From Fuel Tank, page 34.
2. Drain oil from crankcase; refer to Changing Crankcase Oil, steps 1-6, page 29.
3. Remove battery from chassis; refer to Activating and Charging Battery, page 16.
4. Shift transmission into 1st gear and engage parking brake.
5. Tip rider up and onto its rear end.
6. Remove mower housing from rider chassis; refer to Removing/Installing Mower Housing, steps 1-10, page 38.
7. Lubricate all mechanical pivot points on rider and mower housing with light oil.
8. Install mower housing onto rider chassis; refer to Removing/Installing Mower Housing, page 38.
9. Tip rider back to its normal operating position.
10. Fill crankcase with oil; refer to Fill Crankcase With Oil, page 17.
11. Fill fuel tank with gasoline; refer to Fill Fuel Tank With Gasoline, page 13.
12. Install the battery; refer to Installing the Battery, page 35

Cleaning Cooling System

Clean cooling system frequently. Remove build-up of grass, dirt or other debris from the cylinder and cylinder head cooling fins, air intake screen on flywheel end, and carburetor-governor levers and linkage. This will help ensure adequate cooling and correct engine speed and reduce the possibility of overheating and mechanical damage.

Tire Pressure

Service Interval/Specification

Maintain the air pressure in the front and rear tires as specified. Check the pressure at the valve stem after every 25 operating hours or monthly, whichever occurs first (Fig. 18). Check the tires when they are cold to get the most accurate pressure reading.

Set pressure to 20 psi (138 kPa) front and rear.

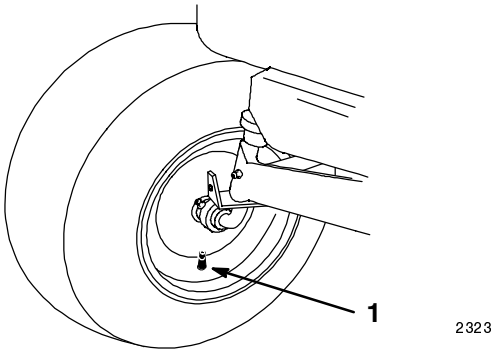

Figure 18

1. Valve stem

Brake

Always set the parking brake when you stop the machine or leave it unattended. If the parking brake does not hold securely, an adjustment is required.

Checking the Brake

1. Park the machine on a level surface, disengage the power take off (PTO), set the parking brake, and turn the ignition key to “OFF” to stop the engine. Remove the ignition key.
2. Rear wheels must lock and skid when you try to push the tractor forward. Adjustment is required if the wheels turn and do not lock; refer to Adjusting the Brake, page 33.
3. Release the brake and push the tractor forward. The wheels should rotate freely.
4. If both conditions are met no adjustment is required.

Adjusting the Brake

Adjust brake pucks if the parking brake does not hold or braking power is not sufficient when brake pedal is depressed. The brake is located on the left side of the transaxle (Fig. 19).

1. Shut engine off and remove wire from spark plug.
2. Remove battery from chassis: refer to Removing the Battery, page 34.
3. Tighten locknut approximately 1/4 turn clockwise (Fig. 19).
4. Check operation of the brake by pushing rider: no brake drag should be evident. If drag is evident, rotate locknut an additional 1/8 turn counter-clockwise or until there is no drag.

   IMPORTANT: With the parking brake released, the rear wheels must rotate freely when you push the mower. If brake action and free wheel rotation cannot be achieved contact your service dealer immediately.

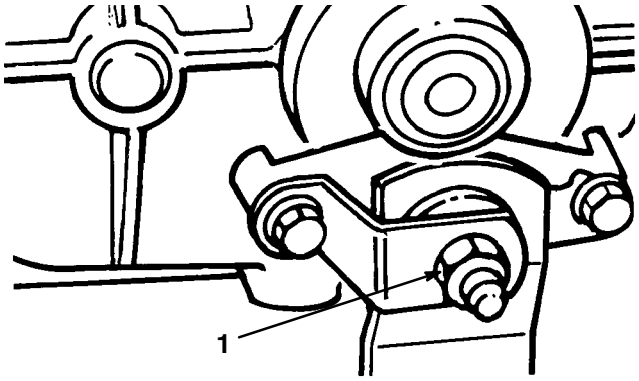

Figure 19

1. Locknut

Fuel Tank

Draining The Fuel Tank

⚠ DANGER

POTENTIAL HAZARD
- **In certain conditions gasoline is extremely flammable and highly explosive.**

WHAT CAN HAPPEN
- **A fire or explosion from gasoline can burn you, others, and cause property damage.**

HOW TO AVOID THE HAZARD
- **Drain gasoline from the fuel tank when the engine is cold. Do this outdoors in an open area. Wipe up any gasoline that spills.**
- **Never drain gasoline near an open flame or where gasoline fumes may be ignited by a spark.**
- **Never smoke a cigarette, cigar or pipe.**

1. Clean area around fuel tank cap so foreign matter cannot enter filler hole when cap is removed. Next, remove cap from fuel tank.

2. Using a pump-type syphon, drain gasoline into a clean gas can.

   Note: There is no other recommended way to drain gasoline from the fuel tank, other than by using a pump-type syphon. An inexpensive syphon can be purchased at a hardware store.

Battery

Service Interval/Specification

Check the electrolyte level in the battery every 5 hours. Always keep the battery clean and fully charged. Use a paper towel to clean the battery case. If the battery terminals are corroded, clean them with a solution of four parts water and one part baking soda. Apply a light coating of grease to the battery terminals to prevent corrosion.

Voltage: 12 v, 160 Cold Cranking Amps

Removing the Battery

1. Disengage the power take off (PTO), set the parking brake, and turn the ignition key to “OFF” to stop the engine. Remove the ignition key.

2. Remove wing nut securing battery hold downs to rider chassis (Fig.20).

3. Disconnect the negative (black) ground cable from the battery post (Fig. 20).

4. Lift the rubber cover up on the positive (red) cable. Disconnect the positive (red) cable from the battery post (Fig. 20).

5. Remove wing nut securing battery hold downs to rider chassis (Fig. 20).

6. Lift up on top battery hold down and pivot rearward

7. Remove battery from chassis.

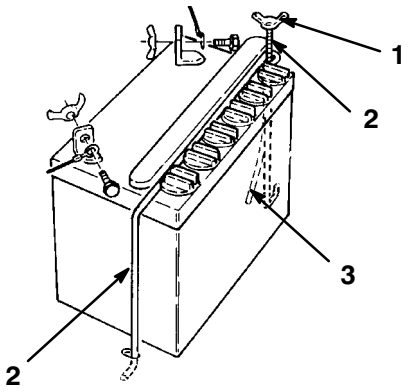

Figure 20

1. Wing nut
2. Battery hold down
3. Vent tube

Installing the Battery

1. Install the battery with the terminal posts toward the inside of the machine and vent tube thru hole in the frame.
2. Secure battery in chassis with hold down rods.
3. Install the red positive cable to the positive (+) terminal and the negative cable (black) to the negative (–) terminal of the battery and secure with capscrews and wing nuts.

Checking Electrolyte Level

1. With the engine off, lift the seat to see the battery.
2. Open covers to see into the cells. The electrolyte must be up to the lower part of the tube (Fig. 21). Do not allow the electrolyte to get below the plates (Fig. 21).
3. If the electrolyte is low, add the required amount of distilled water; refer to Adding Water to the Battery, page 35.

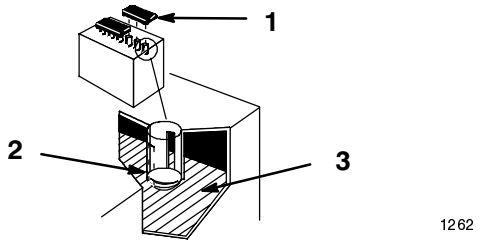

Figure 21

1. Filler caps
2. Lower part of tube
3. Plates

Adding Water to the Battery

The best time to add distilled water to the battery is just before you operate the machine. This lets the water mix thoroughly with the electrolyte solution.

1. Clean the top of the battery with a paper towel.
2. Lift off the filler caps (Fig. 21).
3. Slowly pour distilled water into each battery cell until the level is up to the lower part of the tube (Fig. 21).

   IMPORTANT: Do not overfill the battery because electrolyte (sulfuric acid) can cause severe corrosion and damage to the chassis.
4. Press the filler caps onto the battery.

Charging the Battery

IMPORTANT: Always keep the battery fully charged (1.260 specific gravity). This is especially important to prevent battery damage when the temperature is below 32°F (0°C).

1. Remove the battery from the chassis; refer to Removing the Battery, page 34.
2. Check the electrolyte level; refer to Checking Electrolyte Level, page 35, steps 2-3.
3. Remove the filler caps from the battery and connect a 3 to 4 amp battery charger to the battery posts. Charge the battery at a rate of 4 amperes or less for 4 hours (12 volts). Do not overcharge the battery. Install the filler caps after the battery is fully charged.

⚠ WARNING

POTENTIAL HAZARD
- **Charging the battery produces gasses.**

WHAT CAN HAPPEN
- **Battery gasses can explode.**

HOW TO AVOID THE HAZARD
- **Keep cigarettes, sparks and flames away from battery.**

4. Install the battery in the chassis; refer to Installing the Battery, page 35.

Servicing Cutter Blade

1. Shut off engine and remove wire from spark plug. Remove the ignition key.

   IMPORTANT: To remove blade from spindle shaft, the rider must be tipped on its rear end. Before the rider is tipped, drain all gasoline from fuel tank and oil from crankcase. Also remove battery so acid does not spill onto the rider. (ALL BAGGING ATTACHMENTS MUST BE REMOVED BEFORE TIPPING RIDER.)

2. Drain gasoline from fuel tank: refer to Draining Gasoline From Fuel Tank, page 34.
3. Drain oil from crankcase: refer to Changing Crankcase Oil, steps 1-6, page 29.
4. Remove battery from chassis: refer to Removing the Battery, page 34
5. Shift transmission into 1st gear and engage parking brake. Tip rider onto its rear end.
6. Grasp end of blade using a rag or thickly padded glove; then remove blade bolt, washer and blade (Fig. 22).

   Note: Since blade bolt is tightened to 45-60 ft-lb (61-81 Nm) at the factory, it may be difficult to remove. If the bolt cannot be removed, contact an Authorized TORO Service Dealer or a "service station" for assistance.

7. Using a file, sharpen cutting edge at both ends of the blade (Fig. 23).

IMPORTANT: Sharpen top side of the blade and maintain original cutting angle to ensure a sharp cutting edge. The blade will remain balanced if same amount of material is removed from both cutting edges.

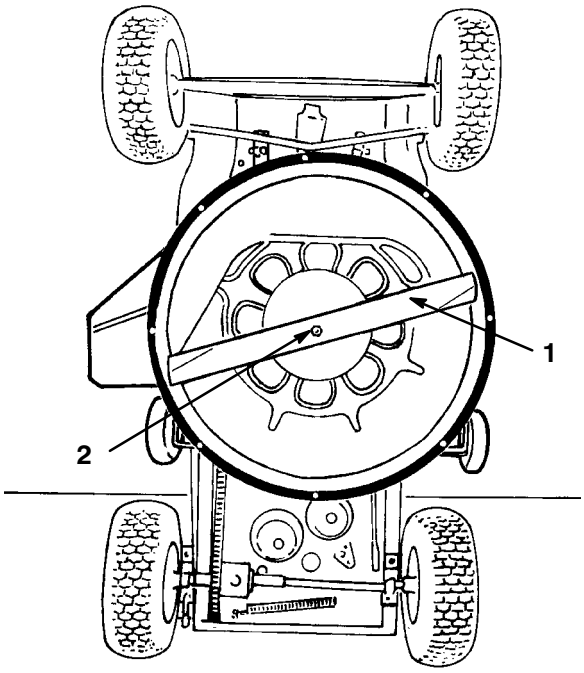

Figure 22

1. Blade
2. Bolt and washer

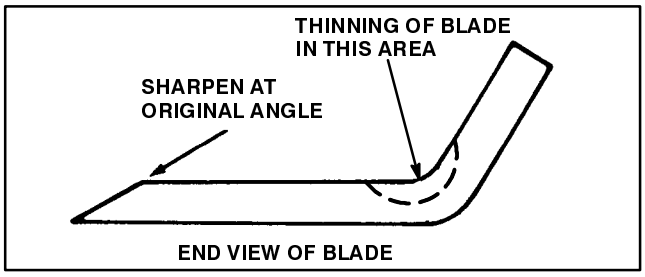

Figure 23

8. Check balance of blade by putting it on a blade balancer. (An inexpensive balancer can be purchased at a hardware store.) A balanced blade will stay in a horizontal position on the balancer. By contrast, a blade that is not balanced will settle to the heavy side. If blade is not balanced, file more material off cutting edge of the blade. Continue to file and check the blade until it is balanced.

9. In sequence, reinstall blade, washer and blade bolt (Fig. 22). Tighten blade bolt to 45–60 ft-lb (61-81 Nm).

IMPORTANT: Make sure cutting edge of blade is away from mower housing

10. Tip rider back to its normal operating position.

11. Fill crankcase with oil: refer to Fill Crankcase with Oil, page 17

12. Fill fuel tank with gasoline: refer to Fill Fuel Tank With Gasoline, page 13.

13. Install the battery; refer to Installing the Battery, page 35

⚠ WARNING

POTENTIAL HAZARD
- **Worn, eroded or cracked blade can be dangerous.**

WHAT CAN HAPPEN
- **Blade can fail and cause personal injury to bystanders.**

HOW TO AVOID THE HAZARD
- **Check blade often.**
- **Replace if bent or out of balance.**
- **Use genuine Toro replacement blade to ensure safety and best performance. NEVER USE A WILL-FIT REPLACEMENT BLADE.**

Removing/Installing Cutting Unit

1. Stop engine and pull wire off spark plug.
2. Shift transmission into 1st gear and engage the parking brake.
3. Move height-of-cut control to lowest position.

   IMPORTANT: To remove mower housing from chassis, rider may be tipped on its rear end. Before rider is tipped, gasoline must be drained from fuel tank and oil from the crankcase. Also, remove the battery so acid does not spill onto the rider

4. Drain gasoline from fuel tank; refer to Draining Gasoline From Fuel Tank, page 34.
5. Drain oil from crankcase; refer to Changing/Draining Oil, steps 1–6, page 29.
6. Remove battery from chassis; refer to Removing the Battery, page 34.
7. Tip rider onto its rear end.
8. Remove blade drive belt; refer to Replacing Blade Drive Belt, page 39.
9. Remove cotter pin and clevis pin securing deck brake rod to idler bracket (Fig. 24).

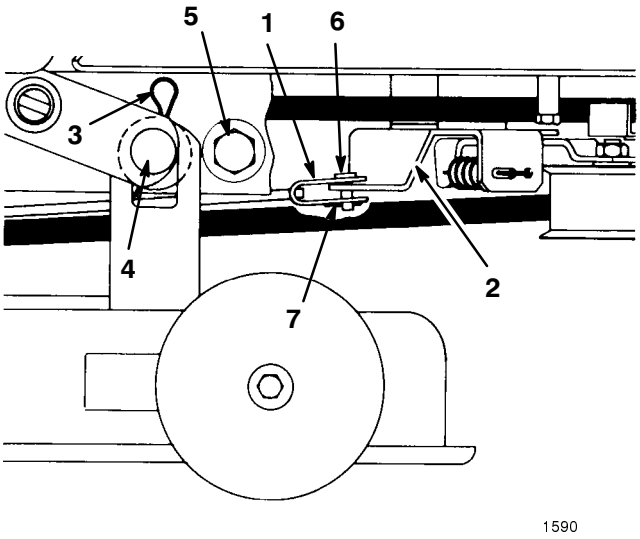

Figure 24

1. Brake rod
2. Idler bracket
3. Hairpin
4. Mounting pin
5. Deck stops
6. Clevis pin
7. Cotter pin

10. Remove (2) hairpin cotters and washers retaining mower housing to mounting pins (Fig. 24). Grasp mower housing and move it to the side until housing slides off pins, then forward to allow front mounts to drop.
11. To reinstall mower housing, reverse removal procedure.
12. Reinstall blade drive belt; refer to Replacing Blade Drive Belt, page 39.
13. Tip rider back to its normal operating position.
14. Fill crankcase with oil; refer to Fill Crankcase With Oil, page 17.
15. Fill fuel tank with gasoline; refer to Fill Fuel Tank With Gasoline, page 13
16. Install the battery; refer to Installing the Battery, page 35.

Replacing Blade Drive Belt

IMPORTANT: To replace the blade drive belt, the rider may be tipped on its rear end. However, before the rider is tipped, drain all gasoline from fuel tank and oil from crankcase. Also remove battery so acid does not spill onto the rider.

1. Drain gasoline from fuel tank; refer to Draining Gasoline From Fuel Tank, page 34.

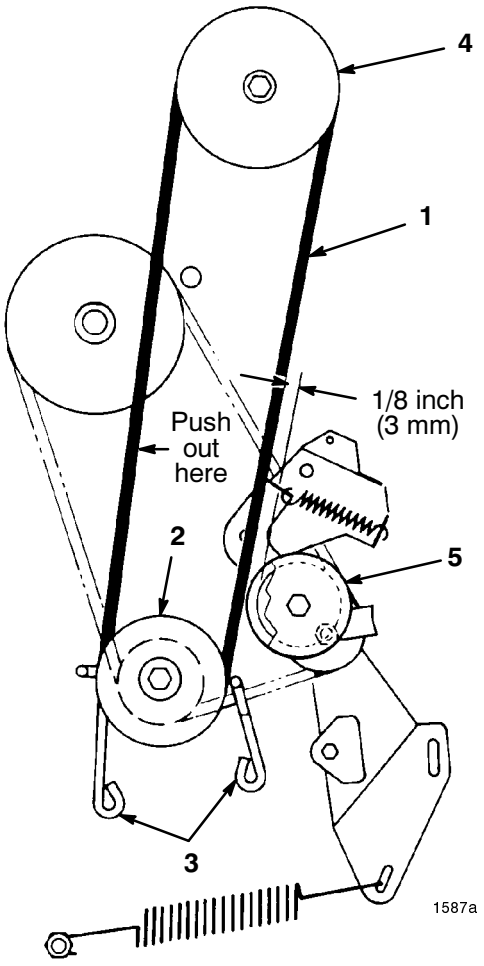

Figure 25

1. Blade drive belt
2. Engine pulley
3. Engine pulley belt guides
4. Mower housing pulley
5. Idler pulley

2. Drain oil from crankcase; refer to Changing Crankcase Oil, steps 1–6, page 29.

3. Remove battery from chassis; refer to Removing the Battery, page 34.

4. Shift transmission into 1st gear and engage the parking brake. Tip rider onto its rear end.

5. Remove capscrews, retainers and locknuts securing deck stops to each side of mower frame (Fig. 24). Slide mower housing rearward to release belt tension.

6. Move height-of-cut control to lowest position.

7. Loosen the capscrews securing (2) engine pulley belt guides and move guides away from pulley. Remove the deck drive belt from engine pulley (Fig. 25).

8. Move the deck engagement lever into ENGAGE detent so brake is away from mower housing pulley.

9. Remove (2) screws securing belt guide to mower housing and remove belt guide. Remove belt from pulley.

10. Make sure deck engagement lever is in ENGAGE detent so brake is away from mower housing pulley and install new belt around pulley. Reinstall belt guide to mower housing.

11. Route belt around engine pulley and reinstall belt guides. Make sure belt guides are within 1/8″ of pulley or belt but not making contact.

12. Pushing out on belt (removing slack), as shown in fig. 25, check clearance between outside of belt and inside of idler pulley (Fig. 25). Clearance should be approximately 1/8 inch (3 mm).

13. If clearance between belt and pulley is correct, proceed to step 16, otherwise proceed to next step for adjustment procedure.

14. Locate deck engagement rod end on left side of transmission (Fig. 26). Remove clevis pin retainer and rotate clevis to lengthen or shorten rod until desired clearance between belt and pulley is attained.

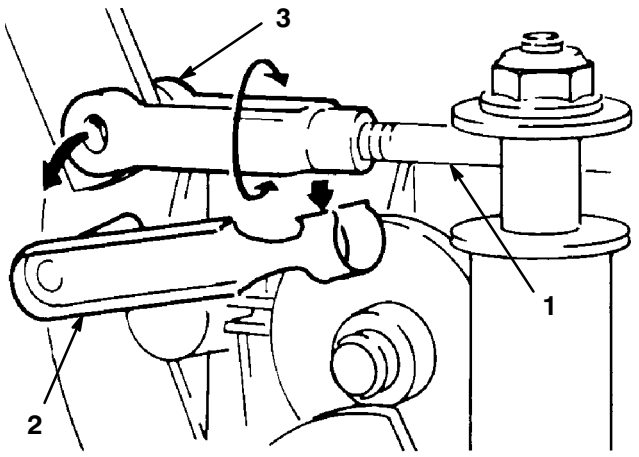

Figure 26

1. Deck engagement rod
2. Clevis pin retainer
3. Clevis

15. Reconnect clevis and recheck adjustment.

16. Tip rider back to its normal position.

17. Fill crankcase with oil; refer to Fill Crankcase with Oil, page 17.

18. Fill fuel tank with gasoline; refer to Fill Fuel Tank With Gasoline, page 13.

19. Install the battery; refer to Installing the Battery, page 35.

Replacing Traction Drive Belt

IMPORTANT: To replace the traction drive belt, the rider may be tipped on its rear end. Before the rider is tipped, drain all gasoline from fuel tank and oil from crankcase. Also remove battery so acid does not spill onto the rider.

1. Drain gasoline from fuel tank; refer to Draining Gasoline From Fuel Tank, page 34.

2. Drain oil from crankcase; refer to Changing Crankcase Oil, steps 1–6, page 29.

3. Remove battery from chassis; refer to Removing the Battery, page 34.

4. Shift transmission into 1st gear and engage the parking brake. Tip rider onto its rear end.

5. Remove blade drive belt; refer to Replacing Blade Drive Belt, page 39.

6. Remove the mower housing; refer to Installing/Removing Housing, page 38.

7. Unhook large traction spring from mounting screw (Fig. 27). Use caution when removing spring as it is heavily tensioned.

8. Unhook idler spring from idler bracket (Fig. 27).

9. Remove locknut and washer securing idler bracket to frame and remove bracket (Fig. 27).

10. Loosen the locknut on pulley until belt guide can be removed (Fig. 27). Remove belt from all pulleys.

11. Reverse procedure to reinstall belt.

Note: When reinstalling belt guide to idler pulley, make sure edge of belt guide is parallel to the frame as shown in Figure 27.

12. Install mower housing; refer to Removing/Installing Mower Housing, steps 11–14, page 38.

13. Tip rider back to its normal operating position.

14. Fill crankcase with oil; refer to Fill Crankcase with Oil, page 17.

15. Fill fuel tank with gasoline; refer to Fill Fuel Tank With Gasoline, page 13.

16. Install the battery; refer to Installing the Battery, page 35.

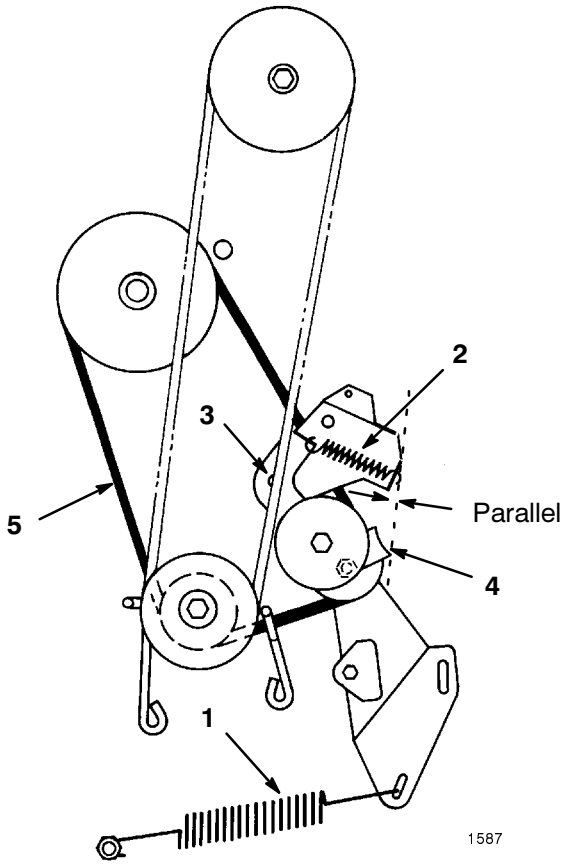

Figure 27

1. Traction spring
2. Idler spring
3. Locknut and washer securing idler bracket
4. Pulley belt guide
5. Traction drive belt

Checking/Adjusting Drive Chain

The drive chain must be adjusted to maintain 1/8 of an inch deflection at mid span between transmission and differential sprockets. Check chain deflection after the first 5 hours of operation and after every 25 hours of operation.

1. Remove two screws securing chain cover to rider chassis and lift off chain cover (Fig. 28).

IMPORTANT: If chain is worn, loose or adjusted incorrectly, chain will make a "popping" sound as it moves over the sprockets, which indicates chain needs adjusting to prevent sprocket damage. If assistance is needed, contact your local authorized Toro Dealer.

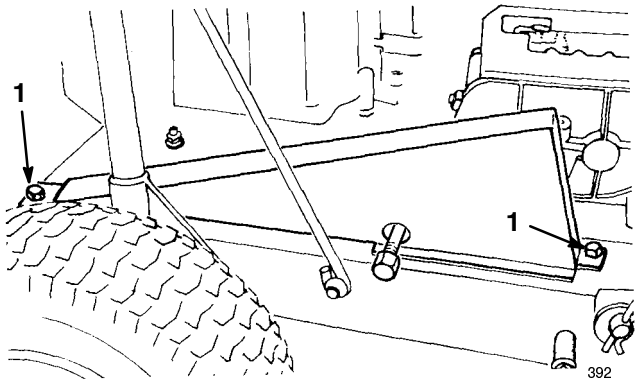

Figure 28

1. Screws

2. Check deflection of drive chain by lifting up and pressing down on chain with moderate pressure at mid span (Fig. 29). There should be 1/8 of an inch (3 mm) total deflection (Fig. 30). If deflection is not as specified, an adjustment is required; see steps 3–13.

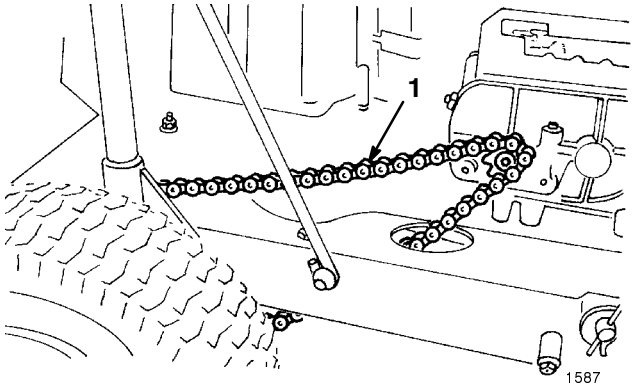

Figure 29

1. Drive chain

IMPORTANT: To adjust drive chain, the rider must be tipped on its rear end. Before the rider is tipped, drain all gasoline from fuel tank and oil from crankcase. Also remove the battery so acid does not spill onto the rider. (ALL BAGGING ATTACHMENTS MUST BE REMOVED BEFORE TIPPING RIDER.)

3. Drain gasoline from fuel tank; refer to Draining Gasoline From Fuel Tank, page 34.

4. Drain oil from crankcase; refer to Changing Crankcase Oil, page 29.

5. Remove battery from chassis; refer to Removing the Battery, page 34.

6. Shift transmission into 1st gear and engage the parking brake. Tip rider onto its rear end so chassis is on top of 2″ x 4″ wood blocks. Wheels must be off the floor so axle can be moved.

7. Loosen four flange nuts securing pillow blocks w/differential axle to the rider frame (Fig. 24).

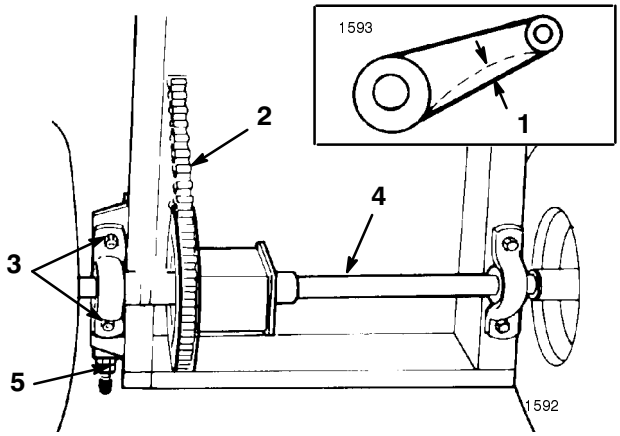

Figure 30

1. 1/8 inch (3 mm)
2. Drive chain
3. Locknuts
4. Axle
5. Chain tensioner

8. Loosen rear jam nut on chain tensioner (Fig. 30).

9. Rotate inside nut on chain tensioner until desired chain deflection is attained.

10. Tighten flange nuts securing right pillow block (chain side) to rider frame.

11. Since axle must be parallel to rear of chassis, measure distance from center of pillow blocks to rear of chassis (Fig. 30). Difference between the two measurements must not exceed 1/8 inch. If difference exceeds 1/8 inch, axle is not parallel with chassis; therefore it must be readjusted.

12. Check the deflection of the drive chain from bottom of rider (refer to step 2).

13. Tip rider back to its normal operating position and install chain cover.

14. Fill crankcase with oil; refer to Fill Crankcase With Oil, page 17.

15. Fill fuel tank with gasoline; refer to Fill Fuel Tank With Gasoline, page 13.

16. Install the battery; refer to Installing the Battery, page 35.

Wiring Diagram

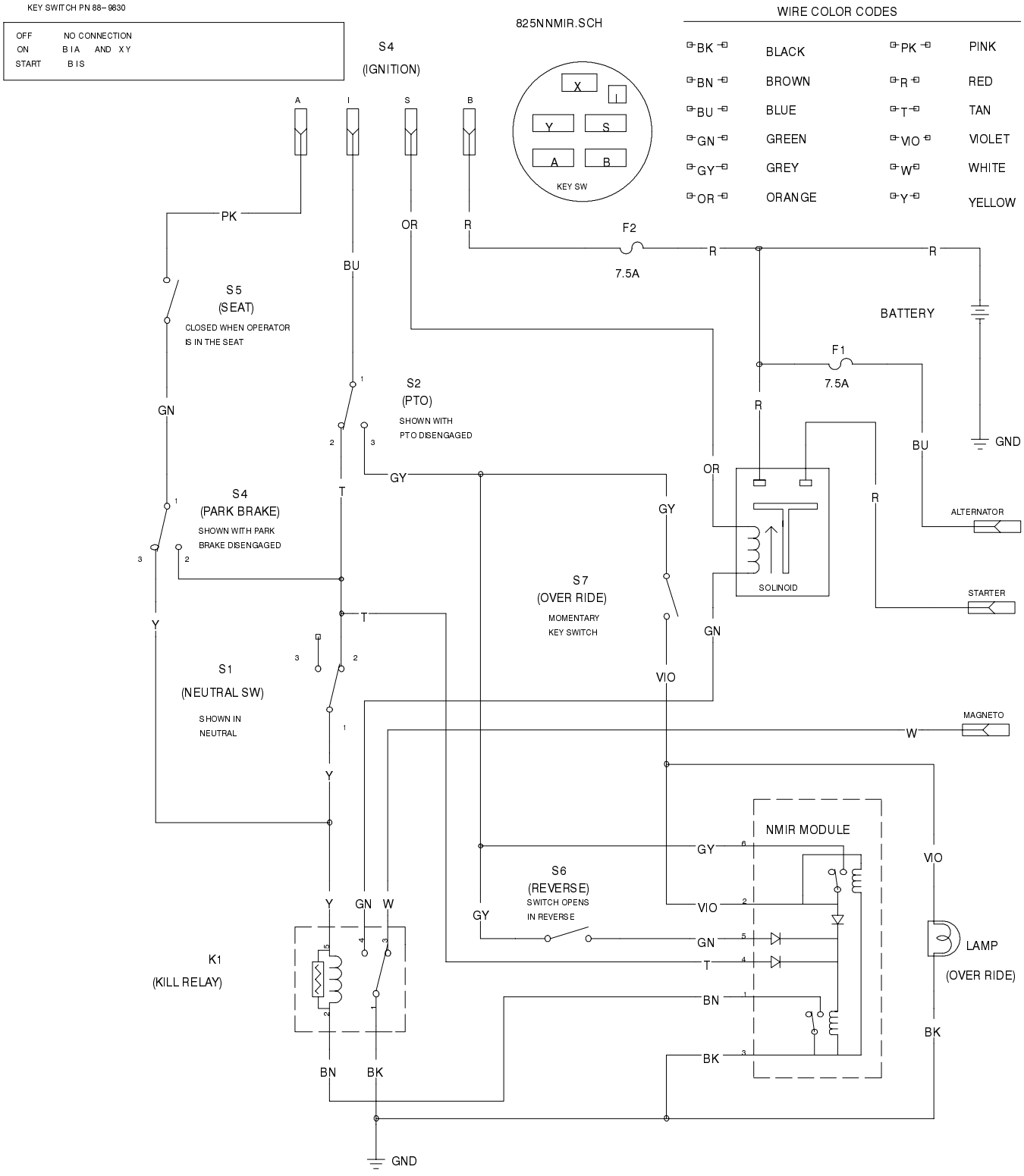

Cleaning and Storage

1. Disengage the power take off (PTO), set the parking brake, and turn the ignition key to "OFF" to stop the engine. Remove the ignition and "Key Choice" keys.

2. Remove grass clippings, dirt, and grime from the external parts of the entire machine, especially the engine. Clean dirt and chaff from the outside of the engine's cylinder head fins and blower housing.

   IMPORTANT: You can wash the machine with mild detergent and water. DO NOT PRESSURE WASH THE MACHINE. Pressure washing may damage the electrical system or wash away necessary grease at friction points. Avoid excessive use of water, especially near the control panel, lights, engine, and the battery.

3. Check the brake; refer to Brake, page 33.

4. Service the air cleaner; refer to Air Cleaner, page 28.

5. Grease the chassis; refer to Greasing and Lubrication, page 31.

6. Change the crankcase oil; refer to Engine Oil, page 29.

7. Check the tire pressure; refer to Tire Pressure, page 32.

8. For storage over 30 days, prepare the traction unit as follows.

   A. Add a petroleum based stabilizer/conditioner to fuel in the tank. Follow mixing instructions from stabilizer manufacturer (1 oz. per gallon). **Do not use an alcohol based stabilizer (ethanol or methanol).**

   Note: A fuel stabilizer/conditioner is most effective when mixed with fresh gasoline and used at all times.

   B. Run the engine to distribute conditioned fuel through the fuel system (5 minutes).

   C. Stop the engine, allow it to cool, and drain the fuel tank; refer to Draining Fuel Tank, page 34.

   D. Restart the engine and run it until it stops.

   E. Choke or prime the engine.

   F. Start and run the engine until it will not start again. Use the primer, if equipped on machine, several times to ensure no fuel remains in primer system.

   G. Dispose of fuel properly. Recycle as per local codes.

   IMPORTANT: Do not store stabilizer/conditioned gasoline over 90 days.

9. Remove the spark plug(s) and check its condition; refer to Spark Plug, page 30. With the spark plug(s) removed from the engine, pour two tablespoons of engine oil into the spark plug hole. Now use the electric starter to crank the engine and distribute the oil inside the cylinder. Install the spark plug(s) and tighten it to 30 ft-lb (40 Nm). Do not install the wire on the spark plug(s).

10. Remove the battery from the chassis, check the electrolyte level, and charge it fully; refer to Battery, page 34. Do not connect the battery cables to the battery posts during storage.

    IMPORTANT: The battery must be fully charged to prevent it from freezing and being damaged at temperatures below 32°F (0°C). A fully charged battery maintains its charge for about 50 days at temperatures lower than 40°F (4°C). If the temperatures will be above 40°F (4°C), check the water level in the battery and charge it every 30 days.

11. Check and tighten all bolts, nuts, and screws. Repair or replace any part that is damaged or defective.

12. Paint all scratched or bare metal surfaces. Paint is available from your Authorized Service Dealer.

13. Store the machine in a clean, dry garage or storage area. Remove the ignition and "Key Choice" keys and keep them in a memorable place. Cover the machine to protect it and keep it clean.

Washing Underside of Mower

After each use wash the underside of the mower to prevent grass build-up for improved mulch action and clipping dispersal

1. Park the machine on a hard level surface, disengage the power take off (PTO) and turn the ignition key to "OFF" to stop the engine.

2. Attach hose coupling to the end of the mower washout fitting, turn water on high (Fig. 31).

3. Lower the mower to the lowest height-of-cut.

4. Sit on the seat and start the engine. Engage power take off (PTO) and let mower run for one to three minutes.

5. Disengage the blade, power take off (PTO) and turn the ignition key to "OFF" to stop the engine. Wait for all moving parts to stop.

6. Turn the water off, remove hose coupling from the washout fitting.

Note: If the mower is not clean after one washing, soak and let stand for 30 minutes. Then repeat process again.

7. Run mower again for one to three minutes to remove excess water.

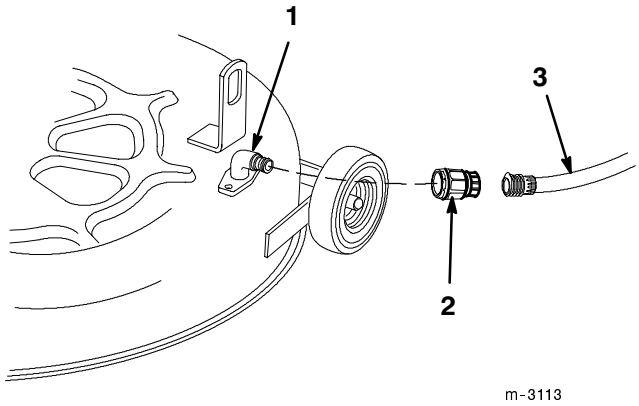

Figure 31

1. Washout port
2. Coupling (not supplied)
3. Hose

⚠ WARNING

POTENTIAL HAZARD

- **A broken or missing washout fitting could expose you and others to thrown objects or blade contact.**

WHAT CAN HAPPEN

- **Contact with thrown debris or blade contact will cause injury or death.**

HOW TO AVOID THE HAZARD

- **Replace broken or missing washout fitting immediately, before using mower again.**
- **Plug any hole(s) in mower with bolts and locknuts.**
- **Never put your hands or feet under the mower or through openings in the mower.**

Troubleshooting

PROBLEM	POSSIBLE CAUSES	CORRECTIVE ACTION
Starter does not crank	1. Deck engagement lever is in ENGAGE.	1. Move deck engagement lever into DISENGAGE.
	2. Battery is dead.	2. Charge the battery.
	3. Electrical connections are corroded or loose.	3. Check electrical connections for good contact.
	4. Transaxle is in gear.	4. Position shift lever in neutral.
	5. Relay or switch is defective.	5. Contact Authorized Service Dealer.
Engine will not start, starts hard, or fails to keep running.	1. Fuel tank is empty.	1. Fill fuel tank with gasoline.
	2. Choke is not ON.	2. Move choke lever to ON.
	3. Air cleaner is dirty.	3. Clean or replace air cleaner element.
	4. Spark plug wire is loose or disconnect.	4. Install wire on spark plug.
	5. Spark plug is loose.	5. Tighten plug to 15 ft-lb (20.4 Nm).
	6. Spark plug is pitted, fouled, or defective.	6. Install new, correctly gapped spark plug.
	7. Spark plug gap is incorrect.	7. Set gap to 0.030″ (.76mm).
	8. Dirt, water, or stale fuel is in the fuel system.	8. Contact Authorized Service Dealer.
	9. Battery is dead.	9. Charge battery.
	10. Vent hole in fuel tank cap is plugged.	10. Clean or replace the fuel cap.
	11. Carburetor is adjusted incorrectly.	11. Adjust the carburetor.
	12. Module or switch is defective.	12. Contact Authorized Service Dealer.
	13. Electrical connections are loose.	13. Check electrical system to ensure good contact.
Engine does not idle or idles poorly	1. Air cleaner is dirty.	1. Clean air cleaner element.
	2. Idle speed is too low.	2. Adjust the carburetor.
	3. Dirt, water, or stale fuel is in the fuel system.	3. Contact Authorized Service Dealer.
	4. Spark plug is pitted, fouled, or defective in some other way.	4. Install new, correctly gapped spark plug.

PROBLEM	POSSIBLE CAUSES	CORRECTIVE ACTION
Blade does not rotate	1. Blade drive belt is worn, loose or broken. 2. Blade drive belt is off pulley.	1. Install new blade drive belt. 2. Install blade drive belt and check idler pulley and belt guides for correct position.
Engine loses power.	1. Engine load is excessive. 2. Air cleaner is dirty. 3. Oil level in crankcase is low. 4. Cooling fins and air passages under engine blower housing are plugged. 5. Spark plug is pitted, fouled, or gap is incorrect. 6. Vent hole in fuel cap is plugged. 7. Carburetor is adjusted incorrectly. 8. Dirt, water, or stale fuel is in fuel system.	1. Reduce ground speed. 2. Clean air cleaner element. 3. Add oil to crankcase. 4. Remove obstruction from cooling fins and air passages. 5. Install new, correctly gapped spark plug. 6. Clean or replace the fuel cap. 7. Adjust the carburetor. 8. Contact Authorized Service Dealer.
Engine overheats.	1. Engine load is excessive. 2. Oil level in crankcase is low. 3. Cooling fins and air passages under engine blower housing are plugged. 4. Carburetor is adjusted incorrectly.	1. Reduce ground speed. 2. Add oil to crankcase. 3. Remove obstruction from cooling fins and air passages. 4. Adjust the carburetor.
Abnormal vibration.	1. Engine mounting bolts are loose. 2. Loose engine pulley, idler pulley, or blade pulley. 3. Engine pulley is damaged. 4. Cutter blade is unbalanced, bent, or loose. 5. Blade bolt is loose. 6. Drive belt is damaged.	1. Tighten engine mounting bolts. 2. Tighten the appropriate pulley. 3. Contact Authorized Service Dealer. 4. Install new cutter blade. 5. Tighten bolt to 45–60 ft-lb (61–81 Nm). 6. Install blade drive belt and check idler pulley and belt guides for correct position.

PROBLEM	POSSIBLE CAUSES	CORRECTIVE ACTION
Machine does not drive.	1. Traction idler is adjusted incorrectly.	1. Adjust traction drive belt.
	2. Traction belt is worn, loose, or broken.	2. Contact Authorized Service Dealer.
	3. Traction belt is off pulley.	3. Contact Authorized Service Dealer.
	4. Transaxle not shifting gears.	4. Contact Authorized Service Dealer.
	5. Drive chain is off sprockets.	5. Install and adjust drive chain.


TORO®