Form No. 3322-816 Rev B

924, 1028, and 1332 Power Shift®

Snowthrower

Model No. 38547—200000001 and Up
Model No. 38560—200000001 and Up
Model No. 38592—200000001 and Up

Operator's Manual

Pour obtenir gratuitement une version en français de ce manuel, écrivez à l'adresse ci-dessous. N'oubliez pas d'indiquer les numéros de modèle et de série de votre produit.

The Toro Company, Attn: Parts Dept., 8111 Lyndale Ave S, Bloomington, MN 55420-1196

Contents

	Page
Introduction	2
Safety	3
General Snowthrower Safety	3
Toro Snowthrower Safety	4
Safety and Instruction Decals	6
Assembly	6
Loose Parts	6
Installing the Auger/Impeller Housing	7
Installing the Shift Rod	8
Installing the Discharge Chute	8
Installing the Chute Control Gear	8
Checking the Tire Pressure	9
Installing the Skids	9
Before Starting	10
Filling the Engine with Oil	10
Filling the Fuel Tank	10
Operation	11
Controls	11
Starting and Stopping the Engine	13
Operating the Power Shift Feature	14
Freewheeling or Self-propelled Drive	14
Operating the Differential	15
Snowthrower Tips	15
Maintenance	16
Recommended Maintenance Schedule	16
Checking the Engine Oil Level	17
Changing the Engine Oil	18
Checking/Adding Auger Gear Box Oil	18
Adjusting the Traction Drive Belt	18
Adjusting the Auger/Impeller Drive Belt	18
Replacing the Drive Belts	19
Adjusting the Scraper and Skids	20
Adjusting the Drive Chain	21
Lubricating the Snowthrower	21
Replacing the Spark Plug	22
Emptying the Fuel Tank	22
Storage	22
Preparing the Fuel System	22
Preparing the Engine	23
Preparing the Snowthrower	23
Accessories	23
Warranty	Back Cover

WARNING

The engine exhaust from this product contains chemicals known to the State of California to cause cancer, birth defects, or other reproductive harm.

Introduction

Thank you for choosing a Toro product. We want you to be completely satisfied with your new purchase.

Read this manual carefully to learn how to operate and maintain your product properly. The information in this manual can help you and others avoid injury and product damage. Although Toro designs and produces safe products, you are responsible for operating the product properly and safely.

Whenever you contact your Authorized Service Dealer or the factory for help with service, genuine Toro parts, or additional information, have the model number and the serial number of your product handy. You will find the model number and serial number decal on the product as illustrated in Figure 1.

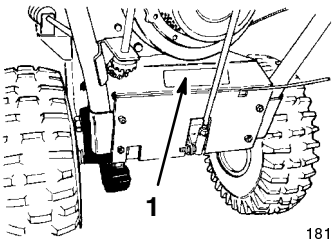

Figure 1

1. Model and serial number decal

For your convenience, write the product model number and serial number in the space below:

Model No. _____

Serial No. _____

This manual identifies potential hazards and has special safety messages that help you and others avoid personal injury and even death. DANGER, WARNING, and CAUTION are words used to identify the level of hazard.

©2000 The Toro Company
All Rights Reserved

Printed in USA

DANGER signals an extreme hazard that will cause serious injury or death if you do not follow the recommended precautions.

WARNING signals a hazard that may cause serious injury or death if you do not follow the recommended precautions.

CAUTION signals a hazard that may cause minor or moderate injury if you do not follow the recommended precautions.

This manual uses two other words to highlight information. **Important** calls attention to special mechanical information and **Note** emphasizes general information worthy of special attention.

Safety

To ensure maximum safety, best performance, and to gain knowledge of the product, it is essential that you and any other operator of the snowthrower read and understand the contents of this manual before the motor is ever started. Pay particular attention to the safety alert symbol ⚠ which means CAUTION, WARNING, OR DANGER — "personal safety instruction." Read and understand the instruction because it has to do with safety. Failure to comply with instruction may result in personal injury.

The snowthrower is designed and tested to offer reasonably safe service; however, **failure to comply with the following instructions may result in personal injury.**

General Snowthrower Safety

The following instructions have been adapted from the ANSI/OPEI standard B71.3—1995 and ISO standard 8437:1989. Information or terminology specific to Toro snowthrowers is enclosed in parenthesis.

Training

- Read the operator's manual carefully. Be thoroughly familiar with the controls and the proper use of the equipment. Know how to stop the unit and disengage the controls quickly.
- Never allow children to operate the equipment. Never allow adults to operate the equipment without proper instruction.
- Keep the area of operation clear of all persons, particularly small children and pets.
- Exercise caution to avoid slipping or falling, especially when operating in reverse.

Preparation

- Thoroughly inspect the area where the equipment is to be used and remove all doormats, sleds, boards, wires, and other foreign objects.
- Disengage all clutches and shift into neutral before starting the engine.
- Do not operate the equipment without wearing adequate winter garments. Wear footwear which will improve footing on slippery surfaces.
- Handle fuel with care; it is highly flammable.
  - Use an approved fuel container.
  - Never add fuel to a running or hot engine.
  - Fill fuel tank outdoors with extreme care. Never fill fuel tank indoors.
  - Replace gasoline caps securely and wipe up spilled fuel.
- Use only the power cord supplied with the snowthrower and a receptacle appropriate for use with the cord for electric starting motors.
- Adjust the collector (auger) housing height to clear gravel or crushed rock surface (this is not necessary on single-stage snowthrowers).
- Never attempt to make any adjustments while the engine is running, except where specifically recommended by manufacturer (Toro).
- Let engine and machine adjust to outdoor temperatures before starting to clear snow.
- The operation of any powered machine can result in foreign objects being thrown into the eyes. Always wear safety glasses or eye shields during operation or while performing an adjustment or repair.

Operation

- Do not put hands or feet near or under rotating parts. Keep clear of the discharge opening at all times.
- Exercise extreme caution when operating on or crossing gravel drives, walks, or roads. Stay alert for hidden hazards or traffic.
- After striking a foreign object, stop the engine, remove the wire from the spark plug, thoroughly inspect the snowthrower for any damage, and repair the damage before restarting and operating the snowthrower.
- If the unit should start to vibrate abnormally, stop the engine and check immediately for the cause. Vibration is generally a warning of trouble.

- Stop the engine whenever you leave the operating position, before unclogging the collector (auger)/impeller housing or discharge guide (chute), and when making any repairs, adjustments, or inspections.
- When cleaning, repairing, or inspecting, make certain the collector/impeller (auger/impeller or rotor blades) and all moving parts have stopped. Disconnect the spark-plug wire, and keep the wire away from the plug to prevent someone from accidentally starting the engine. Disconnect the cable on electric motors.
- Do not run the engine indoors, except when starting it and for moving the snowthrower in or out of the building. Open the outside doors; exhaust fumes are dangerous.
- Do not clear snow across the face of slopes. Exercise extreme caution when changing direction on slopes. Do not attempt to clear steep slopes.
- Never operate the snowthrower without proper guards. plates or other safety protective devices in place.
- Never operate the snowthrower near glass enclosures, automobiles, window wells, drop-offs, etc. without proper adjustment of the snow discharge angle. Keep children and pets away.
- Do not overload the machine capacity by attempting to clear snow at too fast a rate.
- Never operate the machine at high transport speeds on slippery surfaces. Look behind and use care when moving in reverse.
- Never direct discharge at bystanders or allow anyone in front of the unit.
- Disengage power to the collector/impeller (auger/impeller or rotor blades) when snowthrower is transported or not in use.
- Use only attachments and accessories approved by the manufacturer of snowthrower (Toro), such as wheel weights, counterweights, cabs, etc. (Refer to your Authorized Service Dealer for accessories available for your snowthrower.)
- Never operate the snowthrower without good visibility or light. Always be sure of your footing, and keep a firm hold on the handles. Walk; never run.

Maintenance and storage

- Check all fasteners at frequent intervals for proper tightness to be sure the equipment is in safe working condition.
- Never store the machine with fuel in the fuel tank inside a building where ignition sources are present such as hot water and space heaters, clothes dryers, etc. Allow the engine to cool before storing in any enclosure.
- Always refer to this operator's manual for important details if the snowthrower is to be stored for an extended period.
- Maintain or replace safety and instruction labels, as necessary.
- Run the machine a few minutes after throwing snow to prevent freeze-up of the collector (auger)/impeller. (With the engine running, pull the recoil starter handle several times.)

Toro Snowthrower Safety

The following list contains safety information specific to Toro products or other safety information that you must know that is not included in the ANSI or ISO standards.

- **The rotating impeller/auger or rotor blades can cut off or injure fingers or hands.** Stay behind the handles and away from the discharge opening while operating the snowthrower. **Keep your face hands, feet, and any other part of your body or clothing away from concealed, moving, or rotating parts.**
- Before adjusting, cleaning, repairing, and inspecting the snowthrower, and before unclogging the discharge chute, **stop the engine, remove the key, and wait for all moving parts to stop**. Also, pull the wire off of the spark plug and keep it away from the plug to prevent someone from accidentally starting the engine.
- Use a stick, **not your hands** to remove obstructions from the discharge chute.
- **Before** leaving the operator's position behind the handles, stop the engine, remove the key, and wait for all moving parts to stop.
- Do not wear loose fitting clothing that could possibly get caught in moving parts.
- If a shield, safely device, or decal is damaged, illegible, or lost, repair or replace it before beginning operation. Also, tighten any loose fasteners.
- **Do not** smoke while handling gasoline.
- For two-stage snowthrowers, use the lower gear and, if applicable, the rear wheel position when operating on slopes.
- **Do not** use the snowthrower on a roof.
- Do not touch the engine while it is running or soon after it is stopped because the engine will be hot enough to cause a burn. Do not add oil or check the oil level in the crankcase when the engine is running.

- Perform only those maintenance instructions described in this manual. Before performing any maintenance, service, or adjustment, stop the engine, remove the key and pull the wire from the spark plug, keeping it away from the plug to prevent somone from accidentally starting the engine. If major repairs are ever needed, contact your Authorized Toro Service Dealer.
- Do not over speed the engine by changing the governor settings.
- When storing the snowthrower for more than 30 days, drain the gasoline from the fuel tank to prevent a potential hazard. Store gasoline in a safety approved, red container. Remove the key from the ignition switch before storing the snowthrower.
- To ensure the best performance and safety, purchase only genuine Toro replacement parts and accessories to keep the Toro all Toro. **Do not use "Will Fit" replacement parts and accessories as they could cause a safety hazard.**

Before Operating

Read and understand the contents of this manual before operating the snowthrower. Become familiar with all controls and know how to stop the engine quickly.



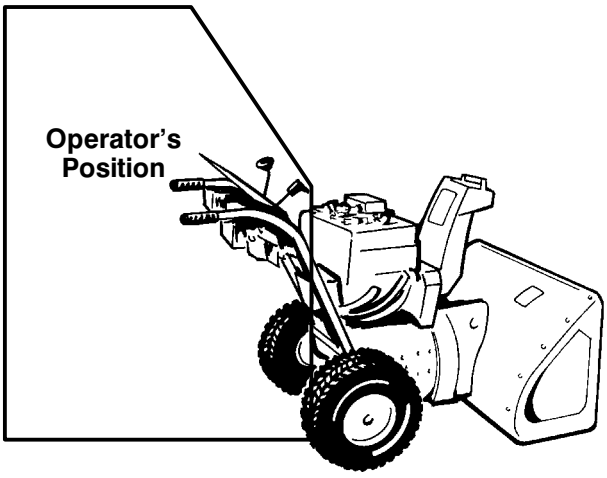

472

Caution: Improper use may result in loss of fingers, hands, or feet.

There is a high-speed impeller within two inches of the opening.



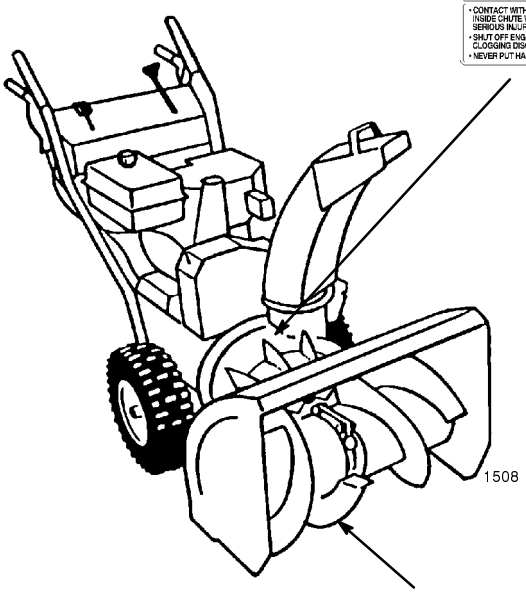

The low-speed auger has a moving pinch point close to the opening.



Safety and Instruction Decals

Safety decals and instructions are easily visible to the operator and are located near any area of potential danger. Replace any decal that is damaged or lost. Decals with Tecumseh part numbers must be obtained from Tecumseh Products Company. Decals with Toro part numbers must be obtained from the Toro Company.



On Auger Housing (Toro Part No. 53-7670)

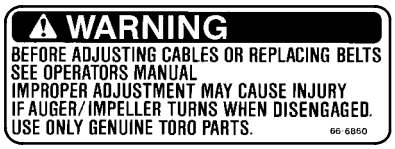

On Engine Base and Right Handle (Toro Part No. 66-6860)

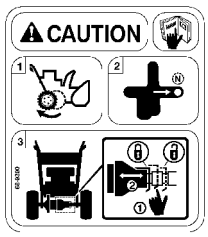

On Rear of Traction Unit (Toro Part No. 68-9390)



On Chute (Toro Part No. 94-8079)



On Engine (Tecumseh Part No. 37119)



Alongside Throttle (Tecumseh Part No. 35703)



Next to Primer (Tecumseh Part No. 36501)



On Lever (Toro Part No. 63-3050)

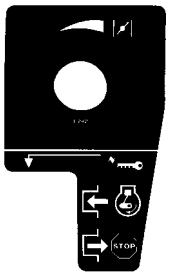

On Engine (Tecumseh Part No. 36253)

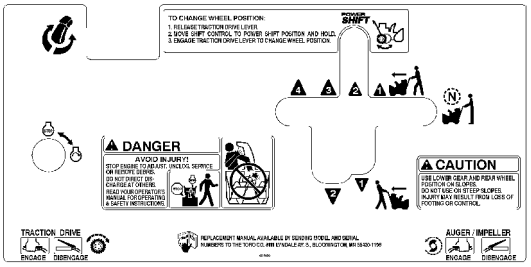

On Control Panel (Toro Part No. 99-3230)

Assembly

Note: Determine the left and right sides of your snowthrower by standing in the normal operating position.

Loose Parts

Part	Qty	Use
Flange head capscrews—3/4 in. (1.9 cm)	6	Mounting the auger/impeller housing
Lower belt cover	1	
Flange head capscrews—1/2 in. (1.3 cm)	5	
Cable cover	1	
Shift rod	1	Installing the shift rod
Locknuts	2	
Discharge chute	1	Installing the discharge chute

Part	Qty	Use
Worm gear	1	Installing the chute control gear
Gear bracket	1	
Carriage bolt—1 in. (2.5 cm)	1	
Flat washer	1	
Locknut	1	
Skids	2	Installing the skids
Flange head capscrews—3/4 in. (1.9 cm)	2	
Flat washers	2	
Locknuts	2	
Key	1	Starting and stopping the engine

Specifications and design are subject to change without notice.

Installing the Auger/Impeller Housing

1. Remove the two flange head capscrews that secure the idler pulley assembly to the engine frame, and remove the idler pulley assembly (Fig. 2).

IMPORTANT: Remove the idler assembly at this point to prevent damaging it before continuing this procedure.

2. Align the auger/impeller housing and the engine frame mounting holes (Fig. 2).

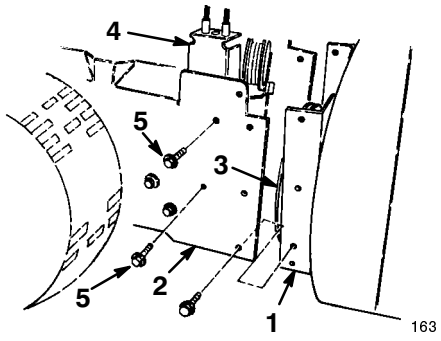

Figure 2

1. Auger housing
2. Engine frame
3. Impeller pulley
4. Idler pulley assembly
5. Mounting screws

3. Route the impeller belt around the impeller pulley (Fig. 2).

4. Secure the auger/impeller housing to the engine frame with six 3/4 in. (1.9 cm) flange head capscrews.

5. Install the idler pulley assembly, aligning the idler pulleys with the belts (Fig. 2).

6. Tip the snowthrower up on the front edge of the auger/impeller housing, and block it in place.

7. Install the lower belt cover on the underside of the auger/impeller housing and the engine frame with two 1/2 in. (1.2 cm) flange head capscrews (Fig. 3).

   Position the belt cover mounting tabs to the rear of the engine frame member.

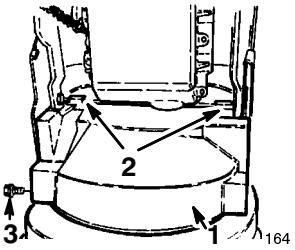

Figure 3

1. Lower belt cover (shown from bottom)
2. Mounting tabs
3. Flange head capscrew

8. Check the adjustment of the impeller cable; see step 3 of *Adjusting the Auger/Impeller Drive Belt* on page 18.

9. Mount the upper belt cover to the engine frame with three 1/2 in. (1.3 cm) flange head capscrews (Fig. 4).

10. Slide the cable cover onto the cables and into the hole in the belt cover (Fig. 4).

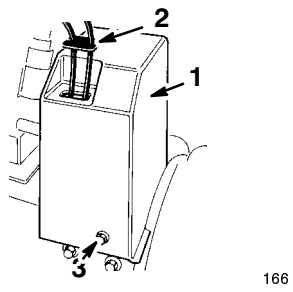

Figure 4

1. Upper belt cover
2. Cable cover
3. Flange head capscrew

Installing the Shift Rod

1. Insert the upper shift rod ball joint stud through the front of the shift bracket and secure it with a locknut (Fig. 5).

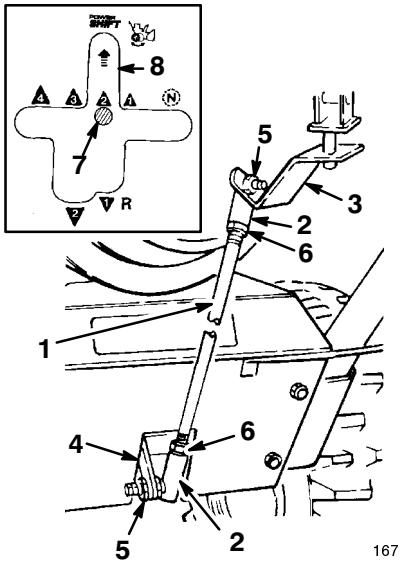

Figure 5

1. Shift rod
2. Ball joint
3. Shift bracket
4. Transmission lever
5. Locknut
6. Jam nut
7. Gear shift lever
8. Power Shift slot

Note: Position the shift rod with the bend rearward.

2. Insert the bottom ball joint stud through the right side of the transmission lever and secure it with a locknut (Fig. 5).
3. Shift into second gear and check the shift rod alignment with the Power Shift slot.

If the gear shift lever is not aligned with the Power Shift slot in the control panel (see inset in Fig. 5), adjust the shift rod length as follows:

1. Disconnect the ball joint from the transmission lever and loosen the jam nut (Fig. 5).
2. Rotate the ball joint up or down, until the gear shift lever is aligned with the Power Shift slot (Fig. 5).
3. Install the ball joint to the transmission lever and tighten the jam nut (Fig. 5).

Installing the Discharge Chute

1. Apply a light coat of low-temperature grease to the chute ring (Fig. 6).
2. Set the discharge chute (open side forward) onto the auger/impeller discharge opening so that the plastic chute retainers are on the chute ring (Fig. 6).
3. Ensure that the chute retainer guide pins are in the holes in the chute gear
4. Tighten the machine screw and the locknut on the left side to position the chute retainer plate against the plastic chute retainer and to secure the discharge chute to the chute ring (Fig. 6).
5. Push the chute retainers on the right side toward the discharge chute and tighten the machine screw (Fig. 6).
6. Ensure that the chute rotates freely on the ring. If the chute binds, move the right hand retainer outward (Fig. 6).

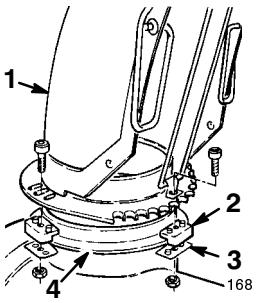

Figure 6

1. Discharge chute
2. Plastic chute retainer
3. Chute retainer plate
4. Chute ring

Installing the Chute Control Gear

1. Insert the 1 in. (2.5 cm) carriage bolt into the gear bracket mounting hole (Fig. 7).
2. Position the worm gear into the bracket, align the holes, and insert the chute gear rod through the bracket and the gear (Fig. 7).

3. Loosely mount the worm gear and the bracket to the mounting flange with a carriage bolt, a flat washer, and a locknut (Fig. 7).

4. Slide the worm gear into the teeth of the chute gear and tighten the locknut (Fig. 7).

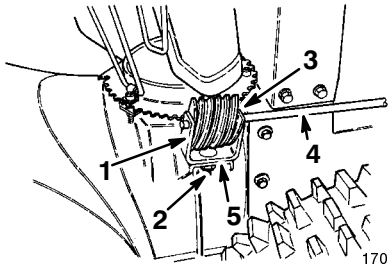

Figure 7

1. Gear bracket
2. Carriage bolt, flat washer, and locknut
3. Worm gear
4. Chute gear rod
5. Mounting flange

5. Check the operation of the chute control.

6. Move the gear slightly outward if it binds.

Checking the Tire Pressure

Check the pressure of the tires because they are over-inflated at the factory for shipping. Reduce the pressure equally in both tires to between 7 and 15 psi (43 and 103 kPa).

Installing the Skids

1. Check the air pressure in the tires; refer to *Checking the Tire Pressure* on page 9.

2. Move the snowthrower onto a flat surface and check if the scraper (Fig. 8) is parallel to the ground. If it is not, adjust the scraper; refer to *Adjusting the Scraper and Skids* on page 20.

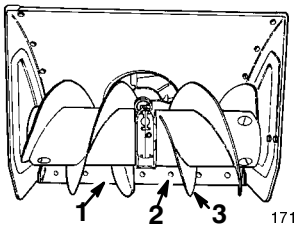

Figure 8

1. Scraper
2. Carriage bolt
3. Auger blades

3. Remove two flange bolts and washers that secure the ends of the scraper to the side plates (Fig. 9).

4. Install the bolts through the rear slots in the skids with the **washers between the skids and the sideplates** (Fig. 9). Do not tighten the bolts.

5. Install the flange bolts through the front slots of both skids and through the sideplates with the **washers between the skids and the sideplates** (Fig. 9). Do not tighten the bolts.

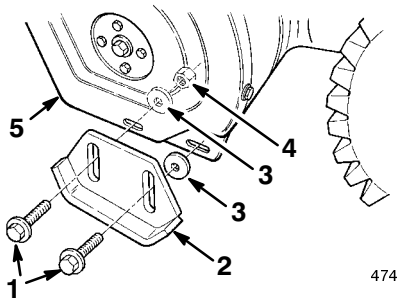

Figure 9

1. Flange bolts
2. Skid
3. Flat washers
4. Locknut
5. Sideplate

To adjust the skids for paved surfaces, complete the following steps. For gravel or crushed rock surfaces, refer to *Adjusting the Scraper and Skids* on page 20.

6. Manually move the wheels to the the **rear** Power Shift position by lifting up on the handles and moving the shift control fully forward to the Power Shift position (Fig. 10).

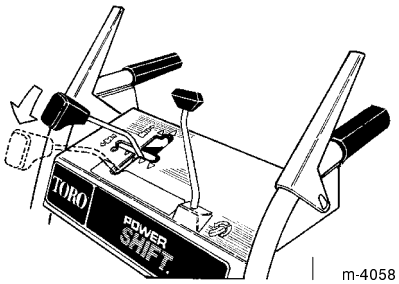

Figure 10

7. Support the auger housing so that the scraper is 1/8 in. (3 mm) above a level surface.

Note: Support the scraper higher than 1/8 in. (3 mm) above the pavement if the pavement surfaces are cracked, rough, or uneven.

8. Move the skids down to sit flat on the ground and tighten the four flange bolts that secure both skids.

Before Starting

Filling the Engine with Oil

The engine comes from the factory with only a few ounces of oil in the crankcase. Before starting the engine, add oil. The crankcase of models 38547 and 38560 hold 26 ounces (0.77 liters) of oil. and the crankcase of model 38592 holds 28 ounces (0.83 liters) of oil. However, because there is some oil in the crankcase, do not add the full amount at one time. Gradually add the oil according to the following procedure:

1. Move the snowthrower to a level surface to ensure an accurate oil level reading.
2. Clean the area around the dipstick (Fig. 11).
3. Remove the dipstick from the crankcase (Fig. 11).
4. Slowly pour 3/4 of the total capacity of oil into the crankcase through the filler hole.

   Slowly pour 3/4 of the total capacity of oil into the crankcase. Use only a high-quality, SAE 5W-30 weight detergent oil, having the American Petroleum Institute (API) "service classification"—SE, SF or SG. For extreme cold conditions (below 0°F or -18°C), use 0W-30 weight detergent oil, having the American Petroleum Institute (API) "service classification"—SE, SF or SG.

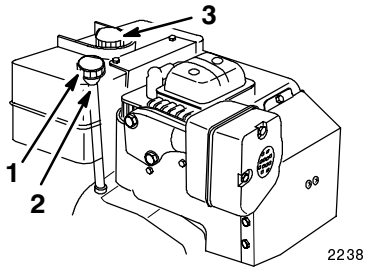

Figure 11

1. Dipstick
2. Filler hole
3. Fuel tank cap

5. Wipe the dipstick clean with a clean cloth.
6. Fully install the dipstick.

Note: To ensure an accurate oil level reading, you must fully install the dipstick.

7. Remove the dipstick.
8. Read the oil level on the dipstick.
9. If the oil level is below the Full mark, slowly add oil, checking the level frequently (steps 5 through 8), until the dipstick reads Full.

IMPORTANT: Do not overfill the crankcase and run the engine; engine damage will result. Drain the excess oil until the oil level on the dipstick reads Full.

Filling the Fuel Tank

Use clean, fresh lead-free gasoline, including *oxygenated* or *reformulated* gasoline, with an octane rating of 87 or higher. To ensure freshness, purchase only the quantity of gasoline that you expect to use in 30 days. Using unleaded gasoline results in fewer combustion chamber deposits and longer spark plug life.

Engines certified to comply with California and U.S. EPA emission regulations for ULGE engines are certified to operate on regular unleaded gasoline, include EM and TWC (if so equipped) emission control systems, and do not include any user adjustable features.

DANGER

POTENTIAL HAZARD
- **In certain conditions gasoline is extremely flammable and highly explosive.**

WHAT CAN HAPPEN
- **A fire or explosion from gasoline can burn you, others, and cause property damage.**

HOW TO AVOID THE HAZARD
- **Use a funnel and fill the fuel tank outdoors, in an open area, when the engine is cold. Wipe up any gasoline that spills.**
- **Do not fill the fuel tank completely full. Add gasoline to the fuel tank until the level is 1/4" to 1/2" (6 mm to 13 mm) below the bottom of the filler neck. This empty space in the tank allows gasoline to expand.**
- **Never smoke when handling gasoline, and stay away from an open flame or where gasoline fumes may be ignited by a spark.**
- **Store gasoline in an approved container and keep it out of the reach of children.**
- **Never buy more than a 30-day supply of gasoline.**

DANGER

POTENTIAL HAZARD
- **When fueling, under certain circumstances, a static charge can develop, igniting the gasoline.**

WHAT CAN HAPPEN
- **A fire or explosion from gasoline can burn you and others and cause property damage.**

HOW TO AVOID THE HAZARD
- **Always place gasoline containers on the ground away from your vehicle before filling.**
- **Do not fill gasoline containers inside a vehicle or on a truck or trailer bed because interior carpets or plastic truck bed liners may insulate the container and slow the loss of any static charge.**
- **When practical, remove gas-powered equipment from the truck or trailer and refuel the equipment with its wheels on the ground.**
- **If this is not possible, then refuel such equipment on a truck or trailer from a portable container, rather than from a gasoline dispenser nozzle.**
- **If a gasoline dispenser nozzle must be used, keep the nozzle in contact with the rim of the fuel tank or container opening at all times until fueling is complete.**

IMPORTANT: Do not use methanol, gasoline containing methanol, gasohol containing more than 10% ethanol, premium gasoline, or white gas. Using these fuels can damage the engine's fuel system.

Use a fuel stabilizer/conditioner regularly during operation and storage. A stabilizer/conditioner cleans the engine during operation and prevents gum-like varnish deposits from forming in the engine during periods of storage.

IMPORTANT: Do not use fuel additives other than a fuel stabilizer/conditioner. Do not use fuel stabilizers with an alcohol base such as ethanol, methanol, or isopropanol.

1. Clean the area around the fuel tank cap (Fig. 11).
2. Remove the cap from fuel tank.
3. Using unleaded, regular gasoline, fill the tank to within 1/4 to 1/2 in. (6 to 13 mm) from the top of the tank.

IMPORTANT: Do not fill the tank with gasoline into the filler neck. This space is for fuel expansion. Do not fill the fuel tank completely full.

4. Install the fuel tank cap.

Operation

Controls

- **Auger/Impeller Drive Control Lever** (Fig. 12)—To engage both the auger and impeller, press the lever against the right handgrip. To disengage, release the lever.
- **Traction Control Lever** (Fig. 12)—To engage the traction (wheel drive), press the lever against left handgrip. To stop traction, release the lever.
- **Speed Shift Control** (Fig. 12)—The control has a neutral position, four forward speeds, and two reverse speeds. It also controls the power shifting of the wheels. To select a speed, move the shift control to the desired position.

  Before shifting the gears into or out of reverse, or when using the Power Shift feature, release the traction drive control. You can use on-the-go shifting feature with any of the **forward** speeds without releasing the traction drive control lever.
- **Auger/impeller Lock-Up**—When you press both the auger/impeller control lever and traction drive control lever, the traction control lever locks the auger/impeller control lever down. Release the traction control lever to release both levers.
- **Discharge Chute Control** (Fig. 12)—Rotate the discharge chute control clockwise to move the discharge chute to the right and counterclockwise to move the chute to the left.

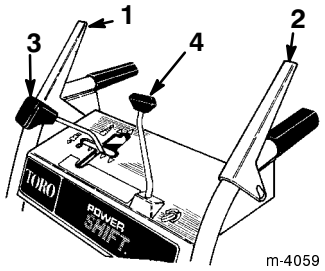

Figure 12

1. Auger/impeller control
2. Traction drive control
3. Speed shift control
4. Discharge chute control

- **Ignition Switch** (Fig. 13)—Insert the key before starting the engine with the recoil starter. To stop the engine, remove the key.
- **Throttle** (Fig. 13)—Move the throttle upward to increase engine speed and downward to decrease engine speed.
- **Choke** (Fig. 13)—Rotate the choke to the Full choke position to start a cold engine. As engine warms up, move choke gradually to Off.

- **Primer** (Fig. 13)—Press the primer to pump a small amount of gasoline into the engine to improve cold weather starting.

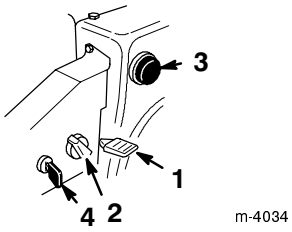

Figure 13

1. Throttle
2. Choke
3. Primer
4. Ignition switch

- **Fuel Shut-Off Valve** (Fig. 14)—The valve is located under fuel tank. Close the valve to stop the fuel flow from the fuel tank and open the valve to allow the fuel to flow to the carburetor. Close the valve you are not using the snowthrower.

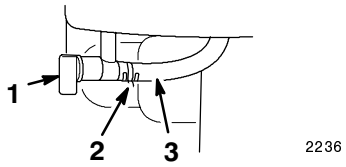

Figure 14

1. Fuel shut-off valve
2. Hose clamp
3. Fuel line

- **Chute Deflector Handle** (Fig. 15)—Move the deflector handle forward to move the snow stream down and rearward to more the snow stream up.

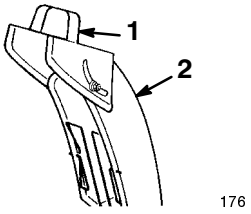

Figure 15

1. Deflector handle
2. Discharge chute

- **Recoil Starter** (Fig. 16)—Pull the recoil starter to start the engine.

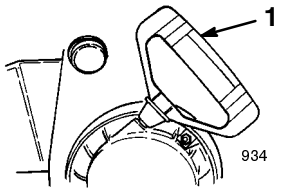

Figure 16

1. Recoil starter

- **Electric Starter** (Fig. 17)—Push the starter button to start the engine.
- **Power Cord** (Fig. 17)—Connect to the electric starter and an electrical outlet when starting the engine.

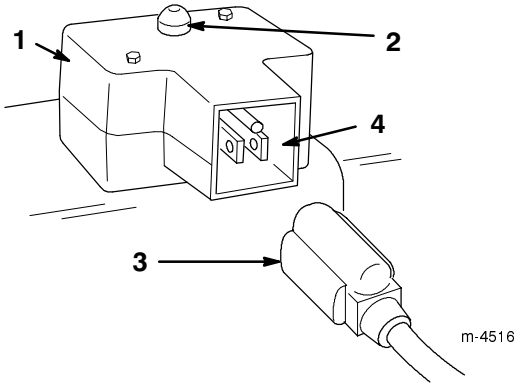

Figure 17

1. Electric starter
2. Starter button
3. Power cord
4. Receptacle

Starting and Stopping the Engine

DANGER

POTENTIAL HAZARD
- **When the snowthrower is in operation, the impeller and auger can be rotating.**

WHAT CAN HAPPEN
- **The rotating auger/impeller can cut off or injure hands and feet.**

HOW TO AVOID THE HAZARD
- **Before adjusting, cleaning, repairing and inspecting the snowthrower, and before unclogging the discharge chute, *shut the engine off and wait for all moving parts to stop.* Also, pull the wire off of the spark plug and keep it away from the plug to prevent someone from accidentally starting the engine.**
- **Use a stick, *not your hands*, to remove an obstruction from the discharge chute.**
- **Stay behind the handles and away from the discharge opening while operating the snowthrower.**
- **Keep face, hands, feet, and any other part of your body or clothing away from concealed, moving or rotating parts.**

Removing the Heater Box

If you operate the engine when the air temperature is above 40°F (4°C), remove the carburetor heater box (Fig. 18). Replace the heater box when the air temperature falls below 40°F (4°C).

1. Pull the choke knob off of the choke rod.
2. Remove two Phillips screws and three hex head screws that secure the heater box in place (Fig. 18).

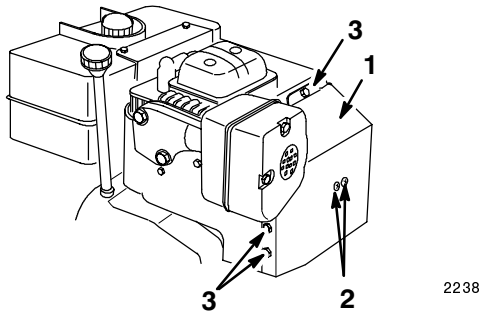

Figure 18

1. Carburetor heater box
2. Phillips screws
3. Hex head screw

3. Lift the heater box up and away from the engine.
4. Install the choke knob on the choke rod.

Starting the Engine

IMPORTANT: Check the auger and impeller to ensure that both parts are not frozen but free to rotate. Also, ensure that the discharge chute is not obstructed. *Use a stick, not your hand, to remove an obstruction from the discharge chute.*

1. Move the speed shift control to the N (neutral) position and the throttle (Fig. 12) to the Fast position.
2. Ensure that the auger/impeller control and the traction drive control levers are disengaged.
3. Open the fuel shut-off valve (Fig. 14) by rotating it to the left.
4. Rotate the choke (Fig. 13) to full choke position.
5. Cover the hole in center of the primer with your thumb and push the primer slowly three times, pausing for two seconds between each push.

IMPORTANT: Do not use the primer if the engine has been running and is hot. Excessive priming may cause flooding of the engine and failure to start.

6. Insert the ignition key (Fig. 13).
7. **For a recoil starter:**

   A. Grasp the recoil starter handle (Fig. 16) and pull it out slowly until positive engagement results; then pull vigorously to start the engine.

   B. Keep a firm grip on the starter handle and return the rope slowly.

   For an electric starter:

   A. Connect the power cord to the snothrower (Fig. 17) and to a standard household power outlet.

   B. Push the starter button (Fig. 17).

   Run the electric starter no more than ten times at intervals of five seconds on, then five seconds off. If the engine does not start after this attempt, wait at least 40 minutes to allow the starter to cool before attempting to start it again.

IMPORTANT: Running the electric starter extensively can overheat and damage the starter.

   If the engine does not start after the second attempt, bring the snowthrower to an Authorized Service Dealer for service.

   C. When the engine starts, disconnect the power cord from the snowthrower and the outlet.

Note: If engine does not start or if the temperature is -10°F (-23°C) or below, the engine may need additional priming. After each push of the primer, try to start the engine before priming again.

8. After the engine starts, immediately rotate choke (Fig. 13) to the 3/4 position.

9. As the engine warms up, rotate the choke to the 1/2 position; then to the Off position.

   If the engine falters, return the choke to the 1/2 position until the engine warms sufficiently, then rotate the choke to the Off position.

Before Stopping the Engine

1. Release the traction and auger/impeller drive control levers.

2. Engage the auger/impeller to clear any remaining snow from inside the housing.

3. Run the engine for a few minutes to help dry off any moisture which may have accumulated.

4. With the engine running, pull the recoil starter with a rapid, continuous, full arm stroke three or four times. This helps prevent the recoil starter from freezing up.

Note: Pulling the starter rope produces a clattering sound. This does not harm the engine or the starter.

Stopping the Engine

1. Release the traction and auger/impeller control levers (Fig. 12).

2. Move the throttle to the Slow position (Fig. 13).

3. Remove the ignition key (Fig. 13).

4. Wait for all moving parts to stop before leaving the operating position.

Operating the Power Shift Feature

Move the wheels to the rear Power Shift position in heavy and/or drifted snow. Leave the wheels in the front position for light snow or for transporting the snowthrower.

1. Release the traction drive control lever.

2. To move the wheels to the front or the rear position, move the speed shift control fully forward to the Power Shift position and hold it there (Fig. 19).

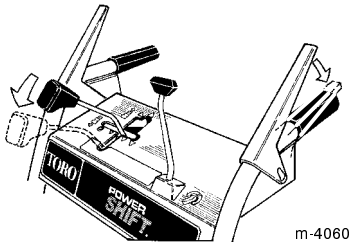

Figure 19

3. Fully engage the traction drive lever to move the wheels into the alternate position (Figs. 19 and 20).

Note: When shifting, you may need to slightly raise the handle to assist wheel movement.

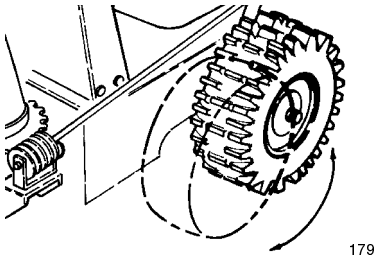

Figure 20

4. Release the speed shift control.

Note: To shift wheels manually if engine is not running, follow steps 1 and 2 and then lift up on the handles to unlock wheels.

Note: If wheels do not move in desired direction when power shifting, repeat the procedure.

Freewheeling or Self-propelled Drive

You can operate the snowthrower with the self-propelling feature engaged or disengaged (freewheeling). There are two holes in each end of the axle. When you insert the axle pins through the outer axle holes and not through the wheel hubs (Fig. 21), the snowthrower freewheels. When you insert both pins through the holes in the wheel hubs and the inner axle holes (Fig. 21) and engage the traction control lever, the snowthrower propels itself.

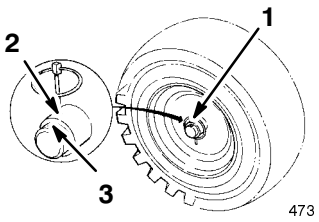

Figure 21

1. Axle pin
2. Inner axle hole
3. Outer axle hole and wheel hub

Operating the Differential

For maximum maneuverability, keep the differential in the unlocked position. When you need additional traction, shift the differential to the locked position.

IMPORTANT: Ensure that the snowthrower is not on a steep slope or incline when performing this procedure.

1. Move the wheels to the rear position (Fig. 22).

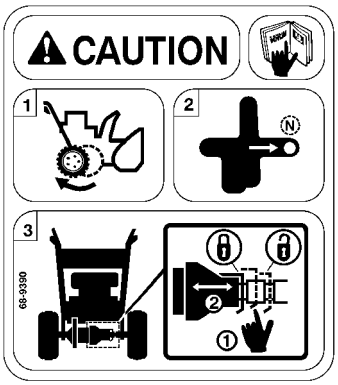

Figure 22

1. Move wheels to rear
2. Shift transmission to neutral
3. Push lock spring up to disengage from shaft groove; then slide coupling to desired position.

2. Shift the speed shift control to the Neutral position (Fig. 22).

3. Push lightly on the release tab of the lock spring to disengage it from the shaft groove and slide the coupling to the desired position (Fig. 22).

- **Lock position**—Slide the coupling lock spring into the left-hand shaft groove (Fig. 23).
- **Unlock position**—Slide the coupling lock spring into the right-hand shaft groove (Fig. 23).

Note: When sliding the coupling from unlock to lock position, you may need to swivel the snowthrower slightly to allow the coupling to clear the differential body bolt heads.

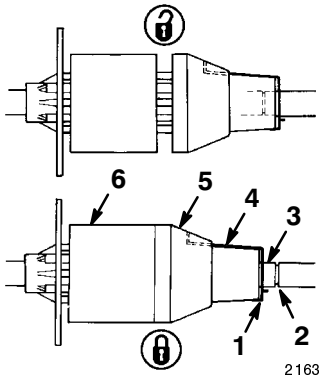

Figure 23

1. Release tab – lock spring
2. Right hand shaft groove (unlock position)
3. Left hand shaft groove (lock position)
4. Lock spring
5. Coupling
6. Differential

Snowthrower Tips

DANGER

POTENTIAL HAZARD

- **When the snowthrower is in operation, the impeller and auger can be rotating.**

WHAT CAN HAPPEN

- **The rotating auger/impeller can cut off or injure hands and feet.**

HOW TO AVOID THE HAZARD

- **Before adjusting, cleaning, repairing and inspecting the snowthrower, and before unclogging the discharge chute, *shut the engine off and wait for all moving parts to stop*. Also, pull the wire off of the spark plug and keep it away from the plug to prevent someone from accidentally starting the engine.**
- **Use a stick, *not your hands*, to remove an obstruction from the discharge chute.**
- **Stay behind the handles and away from the discharge opening while operating the snowthrower.**
- **Keep face, hands, feet, and any other part of your body or clothing away from concealed, moving or rotating parts.**

WARNING

POTENTIAL HAZARD
- **Stones, toys and other foreign objects may be picked up and thrown by the rotor blades.**

WHAT CAN HAPPEN
- **Thrown objects can cause serious personal injury to operator or bystanders.**

HOW TO AVOID THE HAZARD
- **Keep the area to be cleared free of all objects that could be picked up and thrown by rotor blades.**
- **Keep all children and pets away from area of operation.**

- When the snowthrower is not being used, close the fuel shut-off valve and remove the key.
- Remove snow as soon as possible after it falls. This produces best snow removal results.
- Adjust the skids to match the type of surface being cleaned. Refer to *Adjusting the Scraper and Skids* on page 20.
- The snowthrower is designed to clean snow down to the contact surface, but there are times when the front of the snowthrower may tend to ride up. If this happens, reduce forward speed by shifting into a lower gear. If the front still tends to ride up, lift up on both handles to hold down the front of snowthrower.
- Discharge the snow downwind whenever possible.
- Overlap each swath to ensure complete snow removal.
- If the wheels slip, shift into a lower gear to reduce forward speed.
- Do not overload the snowthrower by clearing snow at too fast a rate. If the engine slows down, shift to a lower gear to reduce forward speed.
- Always use full throttle (maximum engine speed) when throwing snow.
- In wet or slushy conditions, maintain maximum engine speed and do not overload the engine to prevent clogging the discharge chute.
- In some winter weather conditions, controls and moving parts may freeze. Therefore, when any control becomes hard to operate, stop the engine and wait for all moving parts to stop; then check all parts for freeze up. **Do not use excessive force or try to operate the controls when they are frozen.**
- When in the rear Power Shift position, push down on the handles to increase traction if necessary.
- Move the wheels to the rear Power Shift position and shift to a lower gear in heavy and/or drifted snow to prevent the auger/impeller housing from riding up over the snow.

Maintenance

Recommended Maintenance Schedule

Service Item	Service Operation	Initial	5 Hours	10 Hours	15 Hours	25 Hours	100 Hours	At Storage
Check the engine oil level	Check the oil level **before each use** and add oil if necessary.	X	X		X	X		X
Change the engine oil	Change the engine oil.					X		X
Auger gear box	Check the auger gear box oil. Add grease if necessary.	X		X				X
Adjust the traction drive	Adjust the traction drive.	X	X		X	X		
Replace the traction drive belt	Replace the traction drive belt as needed.							

Service Item	Service Operation	Initial	5 Hours	10 Hours	15 Hours	25 Hours	100 Hours	At Storage
Adjust the auger/impeller drive belt	Adjust the auger/impeller drive belt as needed.		X		X	X		
Replace the auger/impeller drive belt	Replace the auger/impeller drive belt as needed.							
Scraper and the skids	Adjust the scraper and the skids.	X			X			
Lubricating the snowthrower	Oil and grease the internal moving parts.				X			X
Spark plug	Clean, inspect, and gap. Replace if necessary.						X	
Fuel tank	Drain the gasoline and run the engine to dry out the tank and the carburetor.							X

CAUTION

POTENTIAL HAZARD
- **If you leave the wire on the spark plug, someone could start the engine.**

WHAT CAN HAPPEN
- **Someone accidentally starting the engine could seriously injure you or other bystanders.**

HOW TO AVOID THE HAZARD
- **Pull the wire off of the spark plug before you do any maintenance. Also, push it aside so it does not accidentally contact the spark plug.**

Checking the Engine Oil Level

Check the oil level every five operating hours or each time you use the snowthrower.

1. Move the snowthrower to a level surface.
2. Clean the area around the dipstick (Fig. 11).
3. Remove the dipstick from the crankcase (Fig. 11).
4. Wipe the dipstick clean with a clean cloth.
5. Fully install the dipstick.

Note: To ensure an accurate oil level reading, you must fully install the dipstick.

6. Remove the dipstick (Fig. 11).
7. Read the oil level on the dipstick.
8. If the oil level is below the Full mark, slowly add oil, checking the level frequently, until the dipstick reads Full.

   Use only a high-quality, SAE 5W-30 or SAE 10 weight detergent oil having the American Petroleum Institute (API) “service classification”—SE, SF or SG. For extreme cold conditions (below 0°F or -18°C), use 0W-30 weight detergent oil, having the American Petroleum Institute (API) “service classification”—SE, SF or SG.

IMPORTANT: Do not overfill the crankcase and run the engine; engine damage will result. Drain the excess oil until the oil level on the dipstick reads Full.

9. Install the dipstick.

Changing the Engine Oil

Change the oil after the first two hours of operation and then every 25 hours of operation or annually, whichever comes first. Run the engine just before changing oil because warm oil flows better and carries more contaminants.

1. Pull the wire off of the spark plug and ensure that the wire does not contact the plug.

2. Clean the area around the oil drain plug (Fig. 24).

3. Slide the oil drain pan below the drain extension and remove oil drain plug (Fig. 24).

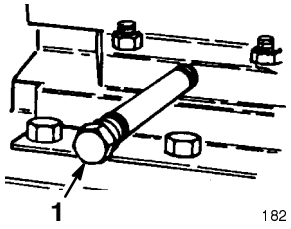

Figure 24

1. Drain plug

4. After draining the oil, install the oil drain plug.

5. Fill the crankcase with oil. Refer to *Filling the Engine with Oil* on page 10.

6. Wipe up any spilled oil.

Checking/Adding Auger Gear Box Oil

Check the auger gear box oil level after assembling the snowthrower, and as given in the *Recommended Maintenance Schedule* on page 16.

1. Pull the wire the off of the spark plug and ensure that the wire does not contact the plug.

2. Position the snowthrower on a level surface.

3. Clean the area around the pipe plug (Fig. 25).

4. Remove the pipe plug from the gear box (Fig. 25).

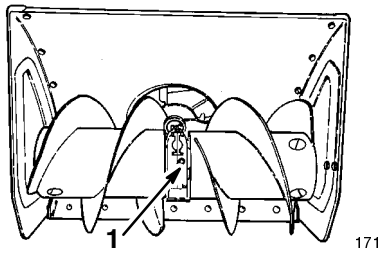

Figure 25

1. Pipe plug

5. Check the oil level in the gear box. The oil must be at the point of overflowing in the filler opening.

6. If the oil level is low, add *GL-5 or GL-6 SAE 85-95 EP* transmission oil to the gear box until the point of overflow. **Do not use synthetic gear oil.**

7. Install the pipe plug in the gear box.

Adjusting the Traction Drive Belt

If the wheels do not turn when you depress the traction lever, increase the traction belt tension. **Whenever you replace the belt, adjust it.**

1. Loosen the upper jam nut that secures the traction cable to the mounting bracket.

2. Rotate the bottom jam nut upward to increase the belt tension.

Note: When adjusting the cable, always rotate the nut one full turn at a time.

3. Tighten the upper jam nut against the bracket.

4. Check the tension of belt by operating the snowthrower.

The snowthrower should begin to move forward when traction lever is pressed approximately halfway down toward handle grip.

5. Stop the engine and repeat steps 1 through 4 until the proper adjustment is achieved.

IMPORTANT: Do not adjust the belt too tight because it may cause snowthrower to creep when traction lever is in disengaged position. If this occurs, decrease the belt tension.

Adjusting the Auger/Impeller Drive Belt

An auger/impeller belt that slips results in decreased snowthrowing performance and requires either an adjustment or a new belt.

IMPORTANT: After five to ten hours of snowthrower operation with a new auger/impeller drive belt, check the belt to ensure the proper tension.

1. Pull the wire the off of the spark plug and ensure that the wire does not contact the plug.
2. Remove the three flange head capscrews that secure the belt cover to the engine frame and slide the belt cover up the cables (Fig. 4).
3. Depress the auger/impeller control lever on the right hand grip.
4. Hold the lever and insert a .010 in. (.25 mm) feeler gauge between a coil in the center of the spring (Fig. 26).

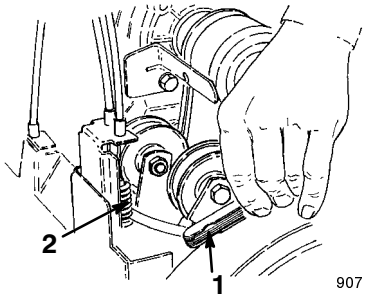

Figure 26

1. Feeler gauge
2. Center of spring

5. If the space between coils is not .010 in. (.25 mm), adjust the cables as follows:
   A. Loosen the upper jam nut that secures the auger/impeller cable to the mounting bracket (Fig. 27).
   B. Rotate the bottom jam nut upward to increase the belt tension.
   C. Tighten the upper jam nut against the bracket.

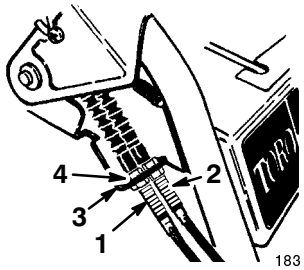

Figure 27

1. Auger/impeller cable (outer cable)
2. Traction cable (inner cable)
3. Mounting bracket
4. Jam nut

6. Repeat steps 3 through 5.
7. Check the impeller brake arm clearance by releasing the auger/impeller lever.

   With the lever released, there should be more than 1/8 in. (3 mm) clearance between tab on impeller idler arm and brake arm (Fig. 28).

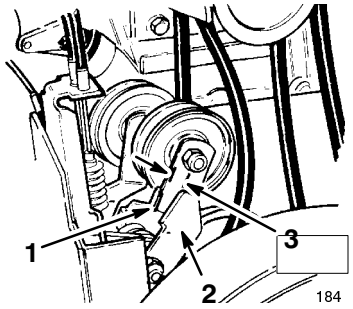

Figure 28

1. Impeller idler arm
2. Brake arm
3. 1/8 in. (3 mm) minimum

8. **If there is less than 1/8 in. (0.32 cm) clearance, replace the belt.** Refer to *Replacing the Drive Belts* on page 19.

DANGER

POTENTIAL HAZARD
- **Improper adjustment may cause injury if the auger/impeller turns when disengaged.**

WHAT CAN HAPPEN
- **The rotating impeller or auger can cut off or injure fingers or hands.**

HOW TO AVOID THE HAZARD
- **Keep your face, hands, feet, and any other part of your body or clothing away from concealed, moving, or rotating parts.**
- **Ensure that the impeller brake arm clearance is maintained.**
- **Do not adjust the auger/impeller drive belt too tight because it may cause the auger/impeller to turn when the control lever is in the disengaged position. If this occurs, decrease belt tension.**

9. Install the belt and the cable covers.
10. Check the belt tension by operating the auger/impeller.
11. **If belt still slips, replace the belt.** Refer to *Replacing the Drive Belts* on page 19.

Replacing the Drive Belts

If the auger/impeller or traction drive belts become worn, glazed, stretched, oil-soaked or otherwise defective, replace the damaged belt.

1. Pull the wire the off of the spark plug and ensure that the wire does not contact the plug.
2. Remove the three flange head capscrews securing the belt cover to the engine frame and slide the belt cover up the cables (Fig. 4).
3. Move the speed shift control to the N (neutral) position.
4. Remove the two flange head capscrews that secure the idler pulley assembly to the engine frame and remove idler pulley assembly (Fig. 29).
5. Remove the capscrew and lockwasher that secures the half sheave to front of the pulley assembly (Fig. 29).
6. Slide the half sheave and auger/impeller belt off of the crankshaft and remove the belt from the impeller pulley (Fig. 29).
7. If the traction drive belt needs replacement, slide the middle pulley section and belt off of the crankshaft and remove the belt from the transmission pulley (Fig. 29).

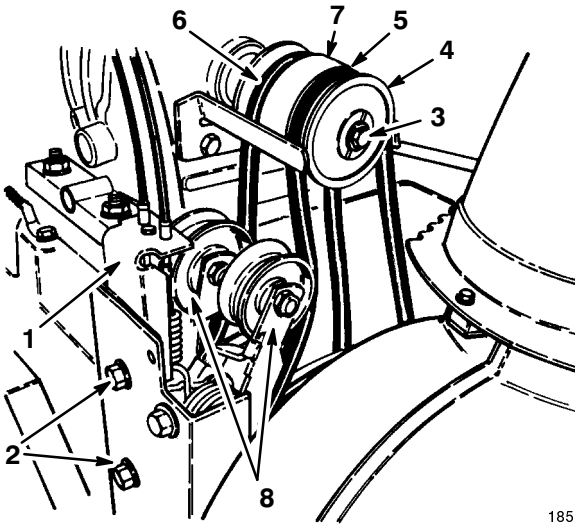

Figure 29

1. Idler pulley assembly
2. Flange head capscrews
3. Capscrew and lockwasher
4. Half sheave
5. Auger/impeller belt
6. Traction belt
7. Middle pulley section
8. Idler pulley

8. On the control cable which corresponds to the belt being replaced, loosen the jam nuts that secures the cable to the bracket (Fig. 27).

Note: The cable must slide freely in the bracket when changing belts.

9. If replacing the traction drive belt, install the belt around the transmission and the middle pulley and slide the middle pulley onto the crankshaft (Fig. 29).
10. Install the belt on the idler pulley (Fig. 29).
11. Install the auger/impeller belt around the half sheave and slide the half sheave onto the crankshaft (Fig. 29).

Note: Ensure that the tabs on the half sheave are inserted into the mounting grooves in the middle pulley.

12. Install the capscrew and lockwasher that secures the half sheave to the front of the pulley assembly.
13. Install the idler pulley assembly on the engine frame and secure it with the two flange head capscrews (Fig. 29).

Note: Ensure that the idler pulleys are aligned with the belts when installing the idler pulley assembly.

14. Install the belt and cable covers.
15. Adjust the belts, refer to *Adjusting the Auger/Impeller Drive Belt* on page 18, or *Adjusting the Traction Drive Belt* on page 18.

Adjusting the Scraper and Skids

Adjust the scraper to compensate for wear and to ensure that the auger does not contact the pavement.

1. Pull the wire off of the spark plug and ensure that the wire does not contact the plug.
2. Check the air pressure in the tires; refer to *Checking the Tire Pressure* on page 9.
3. Move the snowthrower onto a level surface and shift the wheels to the front position.
4. Loosen the four flange bolts that secures both skids to the auger side plates (Fig. 9).
5. Loosen the carriage bolts that secure the scraper to the auger housing (Fig. 8).
6. Support the **auger blades** so that the auger is 1/8 to 1/4 in. (3 to 6 mm) off the ground.
7. Move the scraper so that it contacts the flat surface all the way across and then tighten the two rear flanged capscrews that secure the scraper and skids to the side plates.
8. Tighten all of the scraper fasteners.

For Concrete or Asphalt Surfaces

If the snowthrower is not cleaning up the snow close enough to the pavement, adjust the skids to lower the scraper; if the scraper catches on cracks in the pavement, adjust the skids to raise the scraper.

1. Move the wheels to the rear Power Shift position.
2. Support the scraper 1/8 in. (3 mm) above a level surface.

Note: The scraper should be higher than 3/16 in. (5 mm) above the pavement if the pavement surfaces are cracked, rough, or uneven.

3. Move the skids down to sit flat on the ground.
4. Tighten the four flange bolts that secure both skids (Fig. 9).

For Gravel Surfaces

For gravel or crushed rock surfaces, adjust the skids to prevent picking up rocks.

1. Support the auger a few inches (centimeters) above the ground.
2. Slide the skids down as far as possible.
3. Tighten the flange bolts that secure the skids to the scraper (Fig. 9).

Adjusting the Drive Chain

Adjust the drive chain to maintain a 1/8 to 3/8 in. (3 to 10 mm) deflection mid span between the transmission and the axle sprocket. Check the chain deflection after every 25 hours of operation.

1. Pull the wire the off of the spark plug and ensure that the wire does not contact the plug.
2. Drain the gasoline from the fuel tank. Refer to *Emptying the Fuel Tank* on page 22.
3. Shift the wheels into the rear position, **move the speed shift control into second gear**, and tip snowthrower up onto the front edge of the auger/impeller housing.
4. Check the deflection of the chain by lifting up on chain with moderate pressure at the mid span. There should be 1/8 to 3/8 in. (3 to 10 mm) deflection (Fig. 30).

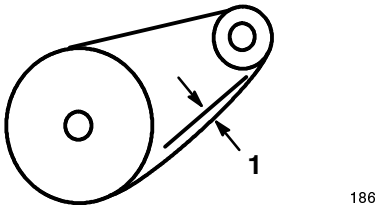

Figure 30

1. 1/8 to 3/8 in. (0.32 to 0.95 cm) deflection

5. If the deflection is not as specified, go to step 6; otherwise, return the snowthrower to the upright position.
6. Loosen the four flange head capscrews (two on each side) that secure the transmission frame to the engine frame (Figs. 31 and 32).

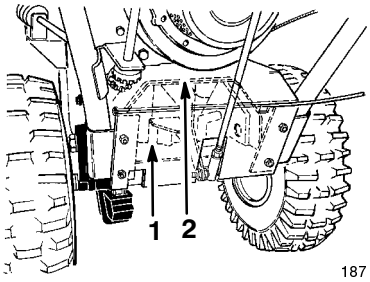

Figure 31

1. Transmission
2. Transmission frame

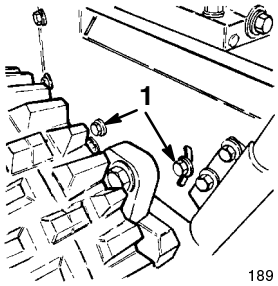

Figure 32

1. Flange head capscrews

7. Pivot the rear of the transmission frame until the chain deflection is 1/8 to 3/8 in. (3 to 10 mm).
8. Tighten the flange head capscrews.
9. Check the chain deflection.

IMPORTANT: Excessive chain tension may cause transmission damage.

10. Check the speed shift control alignment with the Power Shift slot. If the gear shift lever is not aligned with the Power Shift slot in the control panel (see inset in Fig. 5), adjust the shift rod length as follows:
    A. Disconnect the ball joint from the transmission lever and loosen the jam nut.
    B. Rotate the ball joint up or down, until the gear shift lever is aligned with the Power Shift slot.
    C. Install the ball joint to the transmission lever and tighten the jam nut.

Lubricating the Snowthrower

Lubricate the snowthrower periodically as given in the *Recommended Maintenance Schedule* on page 16.

1. Pull the wire off of the spark plug and ensure that the wire does not contact the plug.
2. Lightly lubricate the drive chain with chain lubricant (Fig. 33).

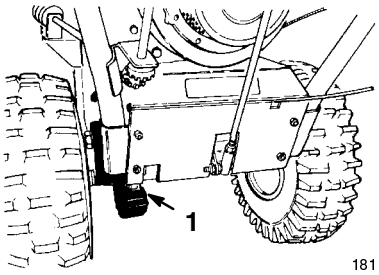

Figure 33

1. Drive chain

3. Wipe up any excess oil.

Replacing the Spark Plug

Check the spark plug periodically as given in the *Recommended Maintenance Schedule* on page 16. If the electrodes in the center of the plug are dark or have deteriorated, install a new Champion RJ-19LM spark plug or equivalent.

1. Clean the area around the spark plug.

2. Pull the wire off of the spark plug (Fig. 34) and remove the plug from the cylinder head.

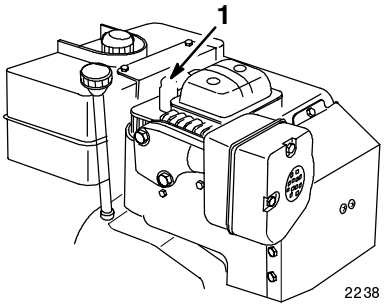

Figure 34

1. Spark plug wire

IMPORTANT: Replace a cracked, fouled, or dirty spark plug. Do not sand blast, scrape or clean the spark plug because dirt and grit can fall into the cylinder and cause engine damage.

3. Set the air gap between the electrodes of the spark plug at 0.030 in. (0.76 mm) (Fig. 35).

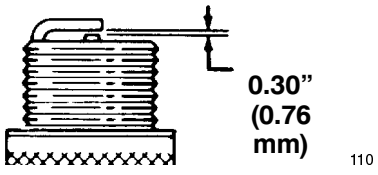

Figure 35

4. Install the spark plug in the cylinder head.

5. Torque the plug to 15 ft-lb (20.4 N·m).

6. Push the wire onto the spark plug (Fig. 34).

Emptying the Fuel Tank

1. Pull the wire off of the spark plug and ensure that the wire does not contact the plug.

2. Close the fuel shut-off valve located under the fuel tank by rotating valve to the left (Fig. 14).

WARNING

POTENTIAL HAZARD
- **Gasoline is highly flammable.**

WHAT CAN HAPPEN
- **Gasoline can be ignited and cause serious personal injury.**

HOW TO AVOID THE HAZARD
- **Drain gasoline outdoors.**
- **Drain gasoline from a cold engine only.**
- **Wipe up any gasoline that may have spilled.**
- **Do not drain gasoline near any open flame or where gasoline fumes may be ignited by a spark.**
- **Do not smoke a cigar, cigarette or pipe when handling gasoline.**

3. Place a clean drain pan under the shut-off valve.

4. Loosen the hose clamp that secures the fuel line to the valve and slide the line off of the valve (Fig. 14).

5. Open the valve by rotating it to the right. This allows the fuel to flow into the drain pan.

6. Install the fuel line and secure it with the hose clamp.

7. Install the spark plug wire.

8. Start the engine and run it until it stops.

Storage

Preparing the Fuel System

1. Add stabilizer/conditioner to the fuel tank as directed.

Note: A fuel stabilizer/conditioner works best when you mix it with fresh gasoline.

2. Run the engine for ten minutes to distribute conditioned fuel through the fuel system.

3. Stop the engine, allow it to cool, and drain the fuel tank.

4. Start the engine again and run it until it stops.

5. Prime the engine, start it a third time, and run the engine until it will not start.
6. Dispose of fuel properly. Recycle per local codes.

Note: Do not store stabilized gasoline over 90 days.

Preparing the Engine

1. Remove the spark plug from the cylinder head.
2. Pour two teaspoons of oil into the spark plug hole.
3. Install the spark plug, but do not install the wire on the plug.
4. Pull the recoil starter slowly to distribute the oil on the inside of the cylinder.
5. Change the engine oil. Refer to *Changing the Engine Oil* on page 18.

Preparing the Snowthrower

1. Lubricate the snowthrower. Refer to *Lubricating the Snowthrower* on page 21.
2. Clean the snowthrower.
3. Touch up chipped surfaces with paint. Paint is available from an Authorized Service Dealer. Sand affected areas before painting, and use a rust preventative to prevent the metal parts from rusting.
4. Tighten all screws and nuts. Repair or replace damaged parts.
5. Cover the snowthrower and store it in a clean, dry place out of the reach of children. Allow the engine to cool before storing it in any enclosure.

WARNING

POTENTIAL HAZARD
- **Gasoline is highly flammable, explosive, and dangerous if inhaled.**

WHAT CAN HAPPEN
- **If gasoline contacts a flame or is inhaled, serious personal injury can occur.**

HOW TO AVOID THE HAZARD
- **Do not store the snowthrower in a house (living area), basement, or any other area where ignition sources may be present, such as hot water and space heaters, clothes dryers, furnaces, and other like appliances.**
- **Allow the engine to cool before storing the snowthrower in an enclosure.**

Accessories

You can obtain the following snowthrower accessories from your Authorized Service Dealer:

- 110 Vac Electric Starter Kit
- Tire Chain Kit (for std. axle; not for use with Differential Kit)
- Snow Cab
- Weight Kit
- Drift Breaker
- Light Kit

Gas Powered
Snow
Products

The Toro Total Coverage Guarantee

A Full Two-Year Warranty
(Limited Warranty for Commercial Use)

What Is Covered By This Express Warranty?

The Toro Company promises to repair any Toro Product used for normal residential purposes* if defective in materials or workmanship for a period of two years from the date of purchase. For single stage snowthrowers, the cost of parts and labor is included, but the customer pays the transportation costs.

Transportation within a 15 mile radius of the servicing dealer is covered under this warranty for two-stage snowthrowers.

What Products Are Covered By This Warranty?

This warranty applies to all gasoline powered snow products.

How About Commercial Use?

Toro Consumer Products used for commercial, institutional or rental use are covered by a limited warranty for 45 days from the date of purchase.

How Do You Get Warranty Service?

Should you feel your Toro Product contains a defect in material or workmanship, contact the dealer who sold you the product or any Authorized Toro Service Dealer or Toro Master Service Dealer. The Yellow Pages of your telephone directory is a good reference source. The dealer will either arrange service at his/her dealership or recommend another Authorized Service Dealer who may be more convenient. You may need proof of purchase (copy of registration card, sales receipt, etc.) for warranty validation.

If for any reason you are dissatisfied with the Service Dealer's analysis of the defect in materials or workmanship or if you need a referral to a Toro Service Dealer, please feel free to contact us at the following address:

Toro Customer Service Department
8111 Lyndale Avenue South
Bloomington, MN 55420-1196
612-888-8801
800-348-2424

What Must You Do To Keep The Warranty In Effect?

You must maintain your Toro Product by following the maintenance procedures described in the operator's manual. Such routine maintenance, whether performed by a dealer or by you, is at your expense.

What Does This Warranty Not Cover? and How Does Your State Law Relate To This Warranty?

There is no other express warranty except for special emission system coverage on some products and the Toro Starting Guarantee on GTS Engines. This express warranty does not cover:

- Cost of regular maintenance service or parts, such as filters, fuel, lubricants, tune-up parts, blade sharpening, brake and clutch adjustments.

- Any product or part which has been altered or misused or required replacement or repair due to normal wear, accidents, or lack of proper maintenance.

- Repairs necessary due to improper fuel, contaminants in the fuel system, or failure to properly prepare the fuel system prior to any period of non-use over three months.

- Pickup and delivery charges for distances beyond a 15 mile radius from an Authorized Toro Service Dealer (covered products only).

All repairs covered by this warranty must be performed by an Authorized Toro Service Dealer using Toro approved replacement parts.

Repair by an Authorized Toro Service Dealer is your sole remedy under this warranty.

The Toro Company is not liable for indirect, incidental or consequential damages in connection with the use of the Toro Products covered by this warranty, including any cost or expense of providing substitute equipment or service during reasonable periods of malfunction or non-use pending completion of repairs under this warranty. Some states do not allow exclusions of incidental or consequential damages, so the above exclusion may not apply to you.

This warranty gives you specific legal rights, and you may also have other rights which vary from state to state.

* Normal residential purposes means removing snow on the same lot as your home. Use at more than one location is considered commercial use and the commercial use warranty would apply.

Countries Other than the United States or Canada

Customers who have purchased Toro Products exported from the United States or Canada should contact their Toro Distributor (Dealer) to obtain guarantee policies for your country, province, or state. If for any reason you are dissatisfied with your Distributor's service or have difficulty obtaining guarantee information, contact the Toro importer. If all other remedies fail, you may contact us at The Toro Company.

Rev. 5/17/1999