1972

TORO®

MODEL NO. 58010-200001 & UP

PARTS CATALOG

3 H.P. TILLER

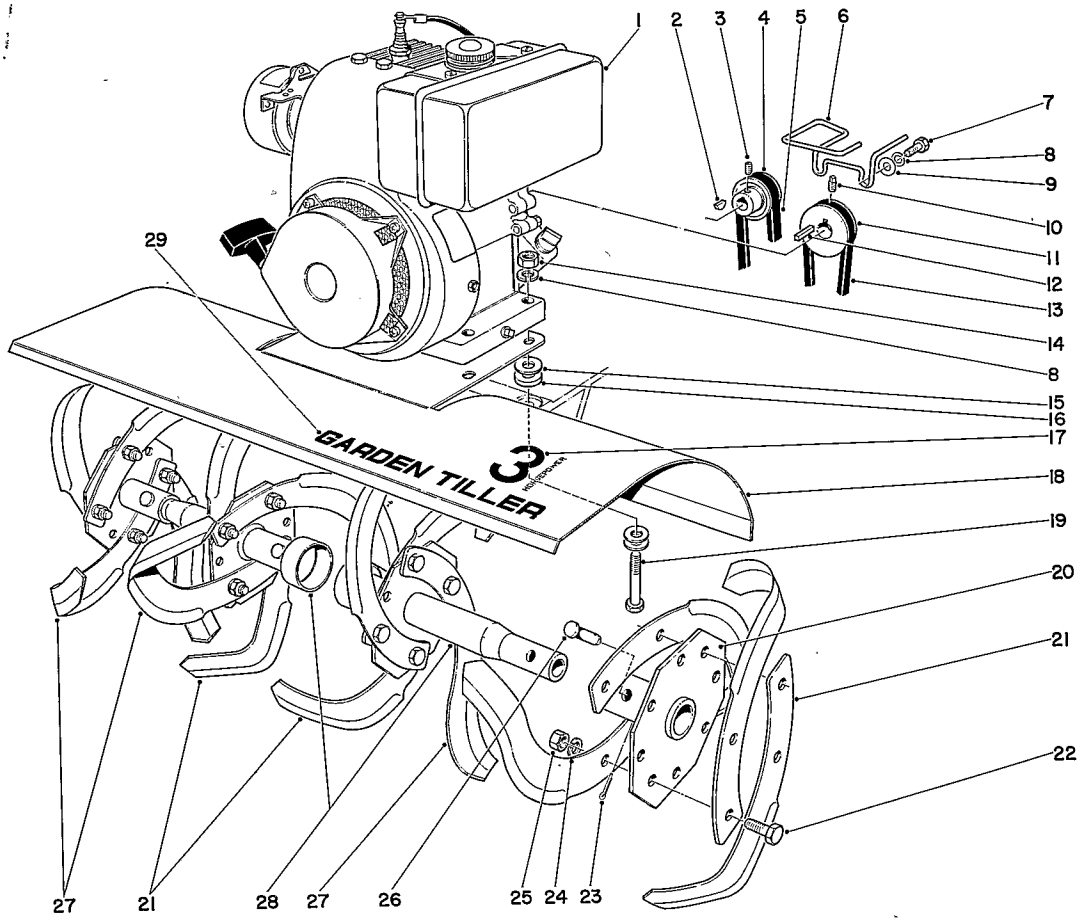

TINE AND ENGINE ASSEMBLY

Ref. No.	Part No.	Description	No. Used
1	221-294	Engine	1
2	3257-24	Woodruff Key	1
3	3245-7	Set Screw	1
4	7-0071	Pulley, Reverse	1
5	7-0074	Belt	1
6	7-3364	Guide, Belt	1
7	3210-2	Capscrew	2
8	3253-4	Lockwasher	6
9	3256-3	Washer	2
10	3246-2	Set Screw	1
11	7-0346	Pulley, Engine	1
12	7-0036	Key	1
13	7-0354	Belt	1
14	3217-6	Nut	4
15	3256-3	Washer	12

Ref. No.	Part No.	Description	No. Used
16	7-0081	Washer	4
17	7-9410	Decal "3 HP"	1
18	7-0072	Shield, Plant	1
19	322-11	Capscrew	4
20	7-0105	Hub, Axle	2
21	7-0103	Tine, R.H.	8
22	323-6	Capscrew	16
23	3272-7	Pin, Cotter	4
24	3253-21	Lockwasher	16
25	3217-7	Nut	16
26	283-15	Pin, Tine	4
27	7-0102	Tine, L.H.	8
28	7-0104	Shaft, Axle	2
29	7-9400	Decal	1

Copyright 1971 By
Toro Manufacturing Corporation
Minneapolis, Minnesota 55420 U.S.A.

Price $1.00

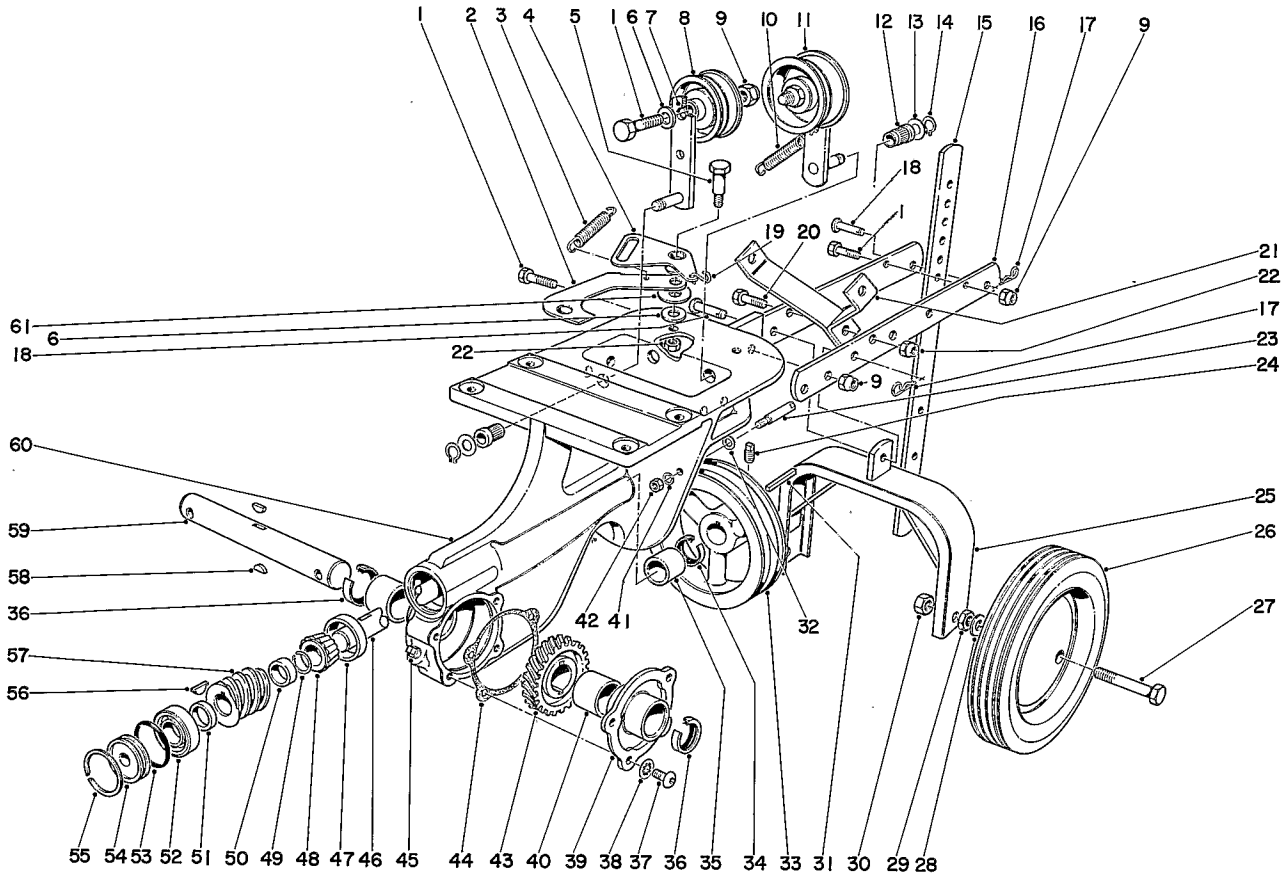

CHASSIS ASSEMBLY

Ref. No.	Part No.	Description	No. Used
1	323-8	Capscrew	5
2	7-0028	Link, Reverse	1
3	7-1322	Spring, Reverse Return	1
4	7-0027	Bellcrank	1
5	7-0030	Bolt, Shoulder	1
6	3256-24	Washer	4
7	7-0050	Arm, Idler	2
8	7-0056	Pulley, Idler	1
9	32152-2	Nut	5
10	7-0025	Spring	1
11	3-4244	Pulley	1
12	7-0023	Bearing, Idler	2
13	3256-23	Washer	2
14	32120-35	Snap Ring	2
15	7-0076	Gauge, Depth	1
16	7-0037	Drawbar	2
17	3290-255	Cotter, Hairpin	2
18	7-0040	Pin, Clevis	2
19	7-3618	S-Hook	1
20	322-7	Capscrew	1
21	7-9340	Handle Support	2
22	32152-1	Locknut	2
23	7-0347	Guide, Belt	2
24	3246-2	Set Screw	1

Ref. No.	Part No.	Description	No. Used
25	7-0038	Bracket, Wheel	1
26	7-0075	Wheel Assembly	2
27	7-3552	Bolt, Wheel	2
28	3256-6	Washer	2
29	3218-5	Jam Nut	2
30	32152-3	Locknut	2
31	7-0036	Key	1
32	3256-16	Washer	2
33	7-0350	Pulley, Worm Shaft	1
34	253-84	Oil Seal	1
35	256-167	Bearing	1
36	7-0045	Oil Seal	2
37	3274-31	Screw, Button Head	4
38	3254-8	Lockwasher	4
39	7-0048	Cover	1
40	252-52	Bearing, Needle	2
41	3255-7	Lockwasher	2
42	3218-1	Jam Nut	2
43	7-0047	Worm Gear	1
44	7-0020	Gasket	1
45	281-1	Pipe Plug	1
46	7-0012	Shaft	1
47	254-89	Bearing Cup	1
48	254-88	Bearing Cone	1

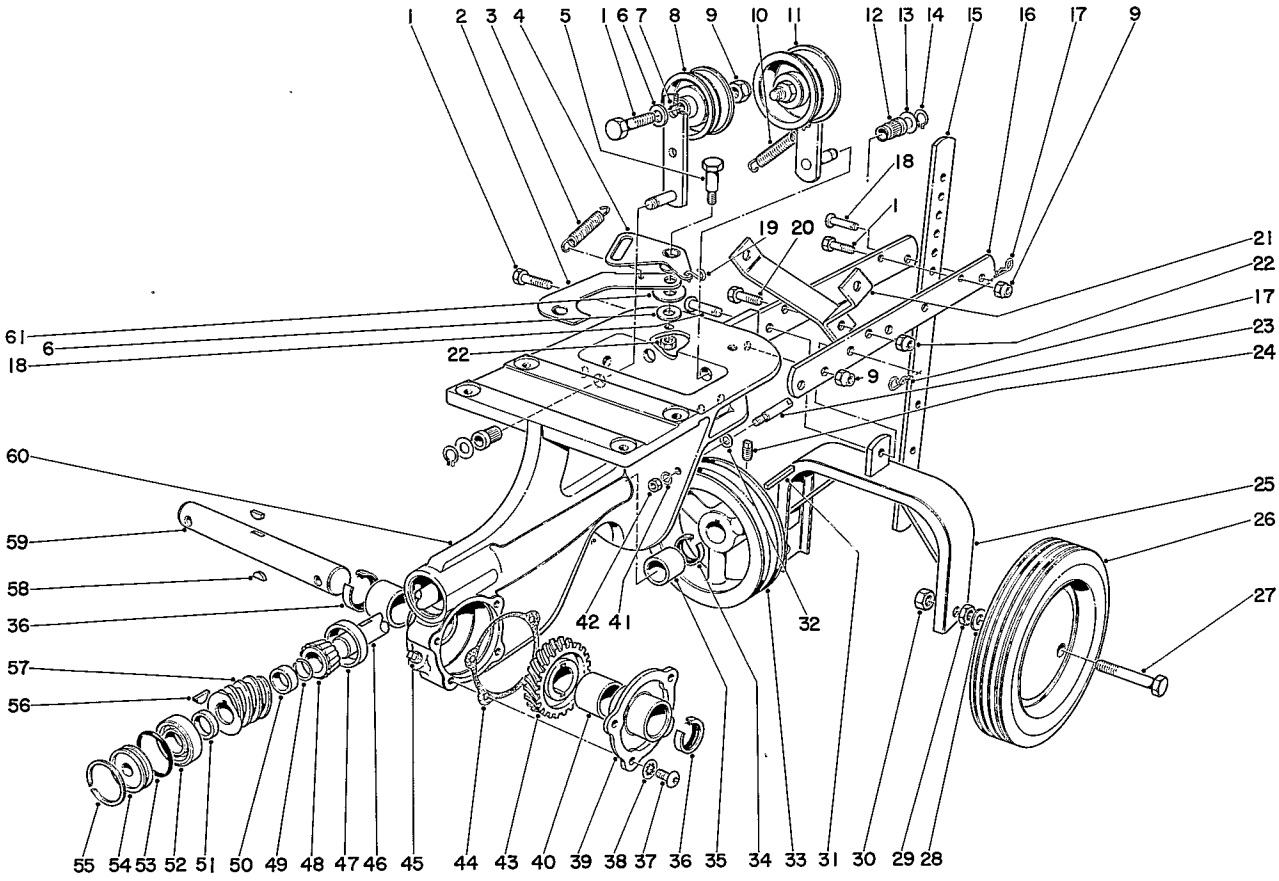

CHASSIS ASSEMBLY (Continued)

Ref. No.	Part No.	Description	No. Used
49	7-0013	Snap Ring	1
50	7-0014	Rear Spacer	1
51	7-0015	Front Spacer	1
52	251-207	Bearing	1
53	237-71	"O" Ring	1
54	7-0017	Plug	1
55	7-0018	Snap Ring	1

Ref. No.	Part No.	Description	No. Used
56	3257-23	Woodruff Key	1
57	7-0016	Worm Gear	1
58	3257-33	Woodruff Key	2
59	7-0046	Worm Shaft	1
60	7-0043	Chassis	1
61	3256-25	Washer	2

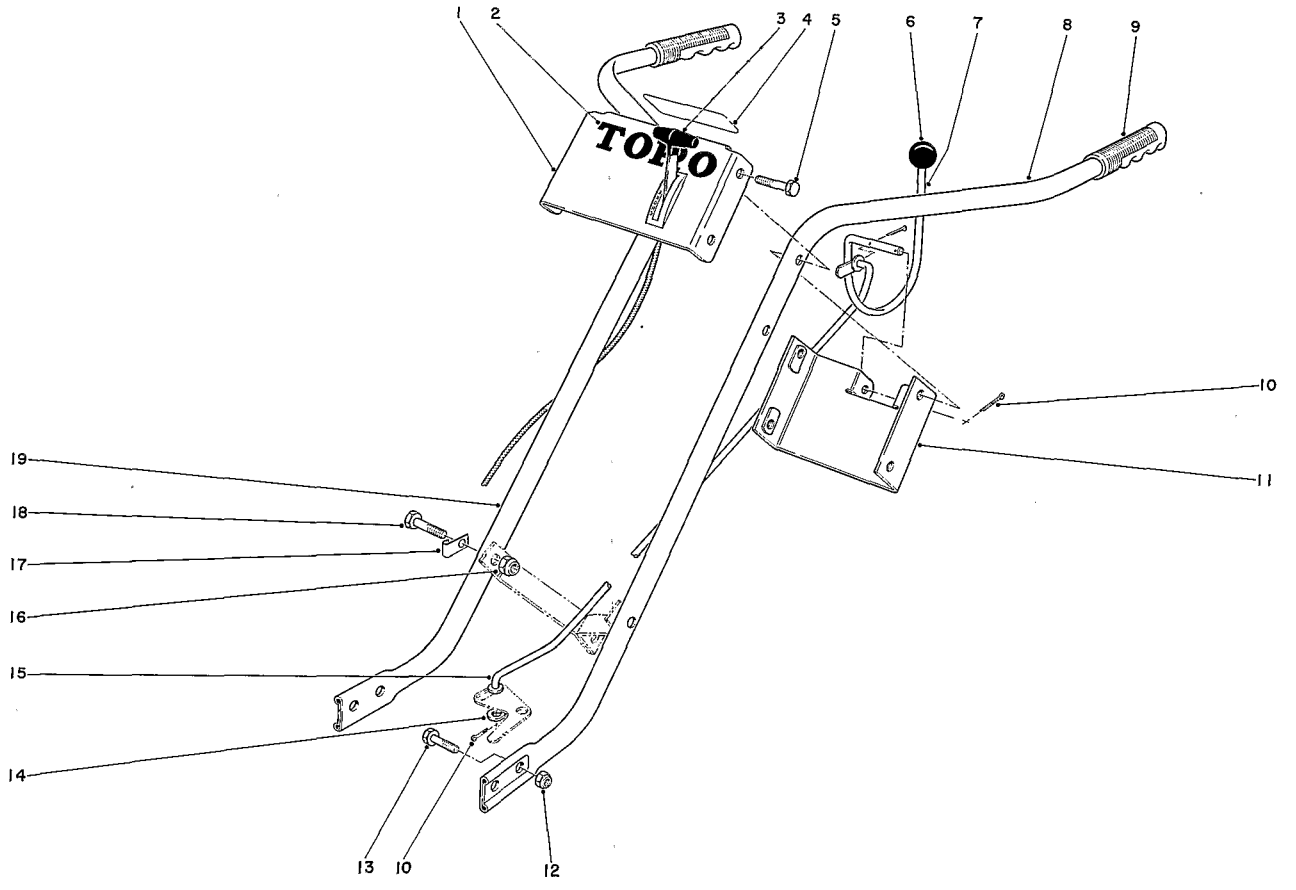

HANDLE ASSEMBLY

Ref. No.	Part No.	Description	No. Used
1	7-9290	Control Plate	1
2	7-9440	Decal, Toro	1
3	7-3361	Throttle Control	1
4	7-9450	Decal, Clutch	1
5	322-9	Capscrew	4
6	233-22	Knob	1
7	7-9320	Clutch Control	1
8	7-9270	Handle, L. H.	1
9	235-19	Handle Grip	2
10	3272-7	Cotter Pin	4

Ref. No.	Part No.	Description	No. Used
11	7-9300	Handle Brace	1
12	32152-2	Locknut	4
13	323-6	Capscrew	4
14	3256-24	Washer	1
15	7-0078	Clutch Rod	1
16	32152-1	Locknut	2
17	7-0077	Clip	1
18	322-11	Capscrew	2
19	7-9280	Handle, R.H.	1

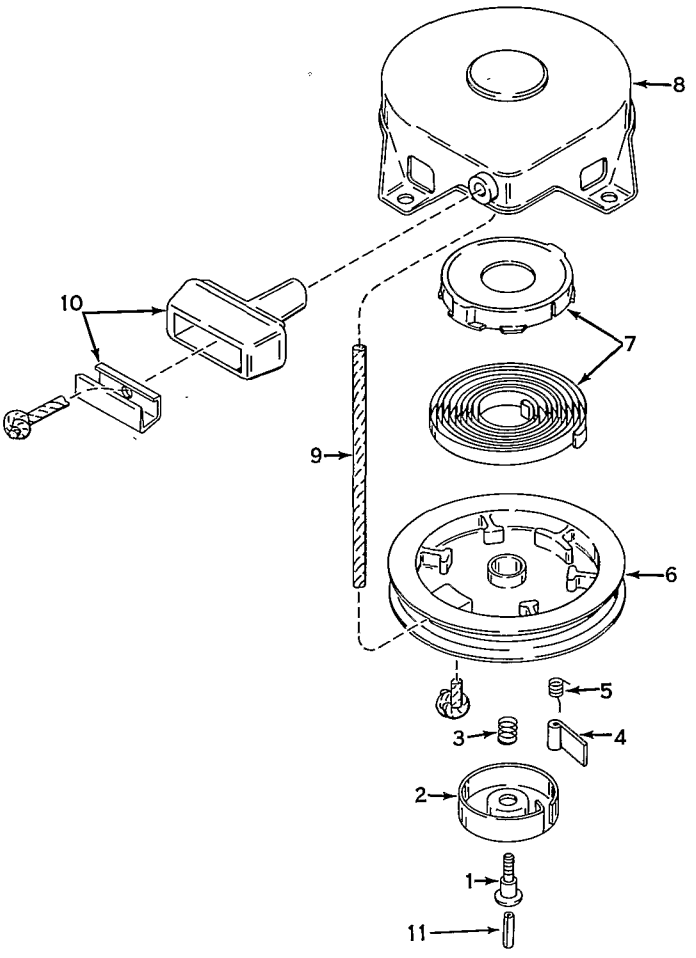

REWIND STARTER MODEL NO. 590420

Ref. No.	Part No.	Description	No. Used
1	590409	Screw, Retainer	1
2	590410	Retainer, R.H.	1
3	590411	Spring, Brake	1
4	590148	Dog, Starter	1
5	590412	Spring, R.H. Dog	1
6	590413A	Pulley	1

Ref. No.	Part No.	Description	No. Used
7	590414	Spring & Keeper Assy.	1
8	590415	Housing Assy., Starter	1
9	590386	Rope, Starter	1
10	590387	Handle Assy., Starter	1
11	590459	Pin, Centering	1

ENGINE TECUMSEH MODEL NO. H30-35168H

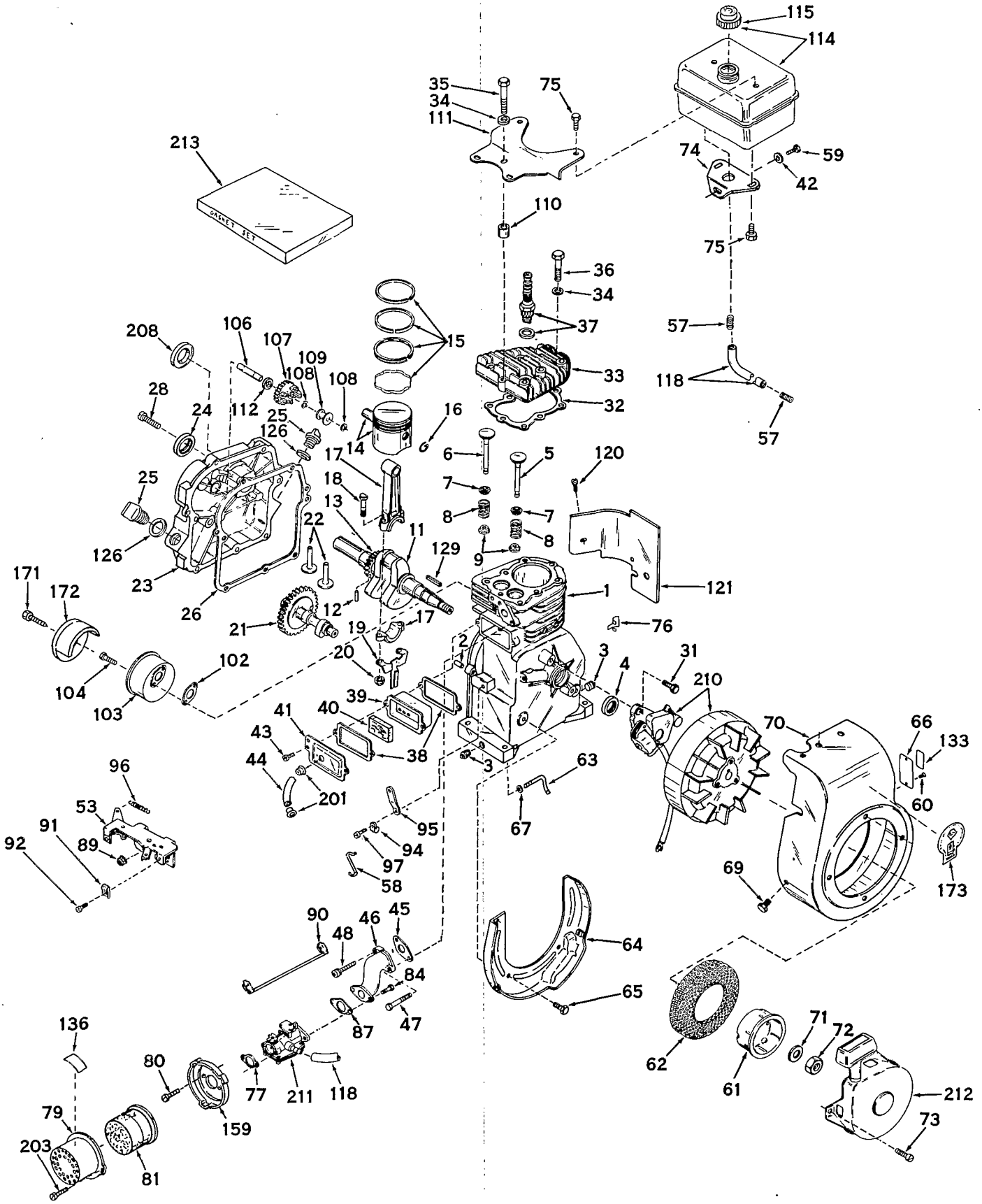

ENGINE TECUMSEH MODEL NO. H30-35168H

Ref. No.	Part No.	Description	No. Used
1	32668	Cylinder Assy. (Incl. Nos. 2, 3 & 4)	1
2	26727	Pin, Dowel	2
3	27642	Plug, Sq. hd. pipe (Oil Drain)	2
4	*29183	Seal, Oil	1
5	29314A	Valve, Intake (Standard) (Incl. Nos. 7, 8 & 9)	1
5	29316A	Valve, Intake (1/32" oversize) (Incl. Nos. 7, 8 & 9)	1
6	29313A	Valve, Exhaust (Standard) (Incl. Nos. 7, 8 & 9)	1
6	29315A	Valve, Exhaust (1/32" oversize) (Incl. Nos. 7, 8 & 9)	1
7	31671	Cap, Upper Valve Spring	2
8	31672	Spring, Valve	2
9	31673	Cap, Lower valve spring	2
11	31737	Crankshaft Assy. (Incl. Nos. 12 & 13)	1
12	29783	Pin, Crankshaft Gear	1
13	27613	Gear, Crankshaft	1
14	31761	Piston & Pin Assy. (Standard) (Incl. 2 of No. 16)	1
14	32662	Piston & Pin Assy. (Incl. 2 of No. 16) (.010 oversize)	1
14	32663	Piston & Pin Assy. (Incl. 2 of No. 16) (.020 oversize)	1
15	27565	Ring Set, Piston (Standard)	1
15	27566	Ring Set, Piston (.010 oversize)	1
15	27567	Ring Set, Piston (.020 oversize)	1
16	20381	Ring, Piston Pin Retaining	2
17	30963B	Rod Assy., Connecting (Incl. Nos. 18, 19 & 20)	1
18	26706	Bolt, Connecting Rod	2
19	28594	Dipper, Oil	1
20	27573	Nut, Lock	2
21	33159	Camshaft, BCR, Extended	1
22	27241	Lifter, Valve	2
23	30757A	Cover, Cylinder (Incl. Nos. 24, 25, 26, 106, 126 & 208)	1
24	*30256	Seal, Oil	1
25	27625	Plug, Oil Filler	2
26	*27677	Gasket, Cylinder Cover	1
28	30564	Screw, Hex hd. Sems	7
31	650489	Screw, Hex hd. Sems	2
32	*29953B	Gasket, Cylinder Head	1
33	30579	Head, Cylinder	1
34	26073	Washer	8
35	650694	Screw, Hex hd. Cap.	5
36	6021	Screw, Hex hd. Cap.	3
37	21943	Plug, Spark (Champion J-8 or equiv.)	1
38	*27234	Gasket, Valve Spring Cover	2
39	27666	Breather Assy. (Incl. Nos. 38 & 40)	1
40	27233	Element, Breather	1
41	27667	Cover, Valve Spring	1
42	650675	Washer, Flat	1
43	650128	Screw, Fil. hd. Sems	2
44	32447	Tube, Breather	1
45	*26754	Gasket, Intake	1
46	28416	Pipe, Intake	1
47	30647	Screw, Fil. hd. Sems	1
48	30646	Screw, Fil. hd. Sems	1
53	33114	Bracket Control	1
57	28819	Spring, Coil	2
58	31858	Link, Governor-to-Throttle	1

Ref. No.	Part No.	Description	No. Used
59	650561	Screw, Hex hd. Sems	1
60	29309	Stud, Drive	2
61	590416	Cup, Starter	1
62	590417	Screen, Starter Cup	1
63	31334	Rod, Governor	1
64	30658	Baffle, Blower Housing	1
65	650561	Screw, Hex hd. Sems	2
66	31345	Plate, Identification	1
67	28277	Washer, Flat	1
69	650556	Screw, Hex hd. Sems	2
70	**30655	Housing, Blower	1
71	650490	Washer, Belleville	1
72	650607	Nut, Crankshaft	1
73	**29716	Screw, Fil. hd. P.C.R. with Shakeproof washer	4
74	32762	Bracket, Fuel Tank (Lower)	1
75	650665	Screw & Lockwasher, Hex hd. Cap	4
76	29443	Fuel, Line Clip	1
77	*27272	Gasket, Air Cleaner	1
79	31692	Body, Air Cleaner	1
80	28820	Screw, Phil. Fil. hd. Sems	2
81	31700	Element, Air Cleaner	1
84	6202	Screw, Hex hd. Cap	2
87	*26756	Gasket, Carburetor	1
89	29752	Nut, Hex	2
90	28468	Wire Assy., Ground	1
91	27793	Clip, Conduit	1
92	28942	Screw, Slotted Hex hd. Sems	1
94	31335	Clamp, Governor Lever	1
95	31510	Lever, Governor	1
96	31426	Spring, Extension	1
97	650548	Screw, Hex Slotted Washer hd.	1
102	*30081	Gasket, Muffler	1
103	30996	Muffler	1
104	650493	Screw, Hex hd. Sems	2
106	30574	Shaft, Mechanical Governor	1
107	30591	Gear Assy., Governor	1
108	29193	Ring, Retaining	2
109	30588A	Spool, Governor	1
110	28212	Spacer	2
111	28371A	Bracket, Fuel Tank	1
112	30590A	Washer, Spacer	1
114	33120	Tank Assy., Fuel (Incl. No. 115)	1
115	33032	Cap, Fuel Tank	1
118	30705	Line, Fuel	1
120	650128	Screw, Fil. hd. Sems	1
121	29745	Extension, Blower Housing	1
126	*29673	Gasket, Oil Filler	2
129	27247	Key, Flywheel	1
133	30586	Decal, Instruction	1
136	31871	Decal, Air Cleaner	1
159	31708	Bracket, Air Cleaner	1
171	650539	Screw, Muffler	1
172	30997	Cover, Muffler	1
173	30597	Decal, Name & H.P.	1
201	32446	Grommet, Breather Tube	2
203	650152	Screw, Fil. hd. Sems	2
208	30318	Seal, Oil Camshaft	1
210	610690A	Magneto	1
211	631144	Carburetor	1
212	**590420	Starter, Rewind	1
213	31346E	Gasket Set (Incl. items marked*)	1

**In original production the starter is riveted to the blower housing. If either the starter or blower housing requires replacement, both will have to be ordered. Also order 4 screws illustrated to attach replacement starter to replacement blower housing.

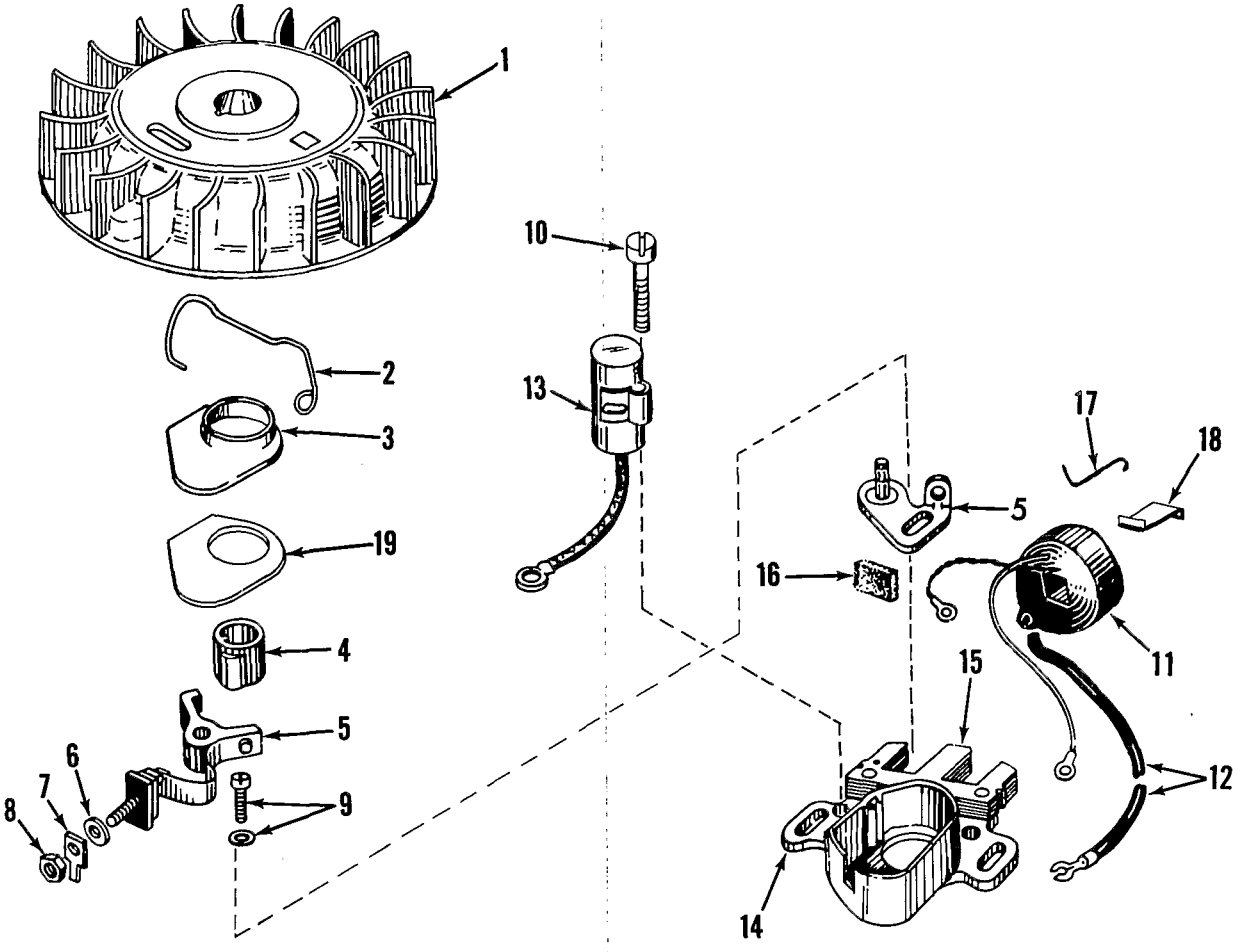

MAGNETO MODEL NO. 610690A

Ref. No.	Part No.	Description	No. Used
1	31332	Flywheel	1
2	30551	Spring, Breaker Box	1
3	30550	Cover, Breaker Box Dust	1
4	30552	Cam, Breaker	1
5	30547A	Contact Assy., Breaker	1
6	610385	Washer, Terminal	1
7	30843	Tab, Ground Terminal	1
8	610408	Nut, Terminal	1
9	29181	Screw & Washer, Breaker	1
10	610593	Screw, Condenser Fastening	1
11	30560	Coil Assy., (Incl. Ref. Nos. 12, 13 & 18)	1

Ref. No.	Part No.	Description	No. Used
12	30554	Wire, Lead	1
13	30548A	Condenser	1
14	30545	Core & Plate	1
15	30561A	Stator Assy., (Incl. Nos. 2, 3, 5 thru 14 & 16 thru 19)	1
16	30549	Felt, Cam Wiper	1
17	31311	Clip, Coil Locking	1
18	29629	Spring, Coil Wedge	1
19	32052	Gasket, Dust Cover	1

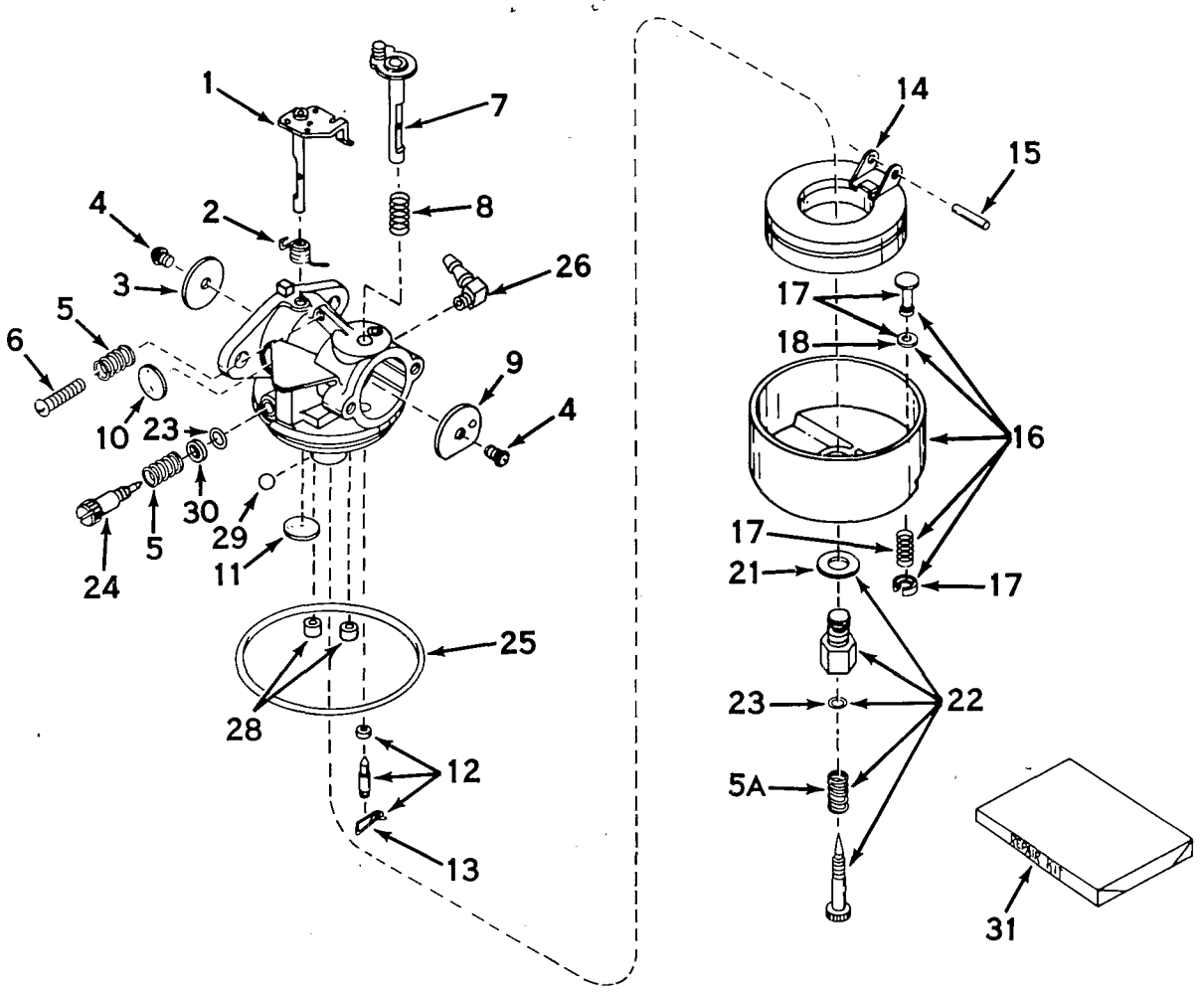

CARBURETOR MODEL NO. 631144

Ref. No.	Part No.	Description	No. Used
	630983	Shaft & Lever Assy., Throttle	1
	631279	Spring, Throttle return	1
	631036	Shutter, Throttle	1
	650506	Screw, Rd. hd.	2
	630766	Spring, Idle regulating screw	2
	630738	Spring, Main adjustment screw	1
	650417	Screw, Idle regulating	1
	31842	Shaft & Lever Assy., Choke	1
	630757	Spring, Choke return	1
	31837	Shutter, Choke	1
	630748	Plug, Welch	1
	631027	Plug, Welch	1
	*631021	Inlet Needle, Seat & Clip Assy. (Incl. No. 13)	1
	631022	Clip, Inlet needle	1
	631023	Float, Carburetor	1
	*631024	Shaft, Float	1

Ref. No.	Part No.	Description	No. Used
16	631025	Bowl & Drain Assy., Float (Incl. Nos. 17 & 18)	1
17	27136	Plunger Assy., Drain (Incl. No. 18)	1
18	27554	Gasket, Drain plunger	1
21	*27110	Gasket, Bowl-to-body	1
22	*31839	Adjustment Screw Assy., Main (Incl. Nos. 5A, 21 & 23)	1
23	630740	"O" Ring, Adjustment screw	1
24	*631078	Screw, Idle adjustment	1
25	*631028	Gasket, Bowl-to-body	1
26	631038	Fitting, Fuel inlet	1
28	630747	Plug, Cup	2
29	631081	Ball, Aluminum	1
30	630739	Washer, Flat	1
31	31840	Repair Kit (Incl. items marked*)	1

PRODUCT CHANGES

In an effort to make improvements available to Toro owners as quickly as possible, minor changes are incorporated into Toro's products from time to time that do not become immediately shown in the Parts Catalog. If such a change apparently has been made in your unit, which is not reflected in your manual, see your Toro distributor or his authorized Toro service dealer for information and part numbers.

THE TORO PROMISE

It is Toro's policy to design and produce Toro products to provide our customers with a high level of performance and durability in normal operation. Our products, however, are produced in high volume, and it is inevitable that occasionally a unit will reach a customer with a defect in materials or workmanship which causes that unit to fall below the normal high level of Toro performance. Invariably, such a defect will be noticed in a residential product within one year, and in an institutional product within ninety days after purchase. Recognizing this possibility, Toro has established a simple guarantee policy and procedure that is intended to assure customer satisfaction. This guarantee statement is as follows:

The Toro Promise

Toro Manufacturing Corporation promises to repair any TORO product for the original purchaser if defective in materials or workmanship. The following time periods from the date of purchase apply:

Residential products . . . . . 1 year
Residential products used commercially. . . 45 days
Institutional products . . . . . 90 days

The costs of parts and labor are included, but the customer pays the transportation costs. Just return any residential product to a TORO Service Dealer, or any institutional product to a TORO distributor.

Should you feel that a product is defective, and wish to rely on The Toro Promise, the following procedure is recommended:

1. Contact any TORO dealer or distributor, but preferably the dealer or distributor from whom you purchased the product.
2. He will instruct you to either return the product to him, or tell you the name and address of your nearest TORO Service Dealer if the product is to be returned to such dealer.
3. Take the product and your original sales slip, or other evidence of purchase date, to the servicing dealer.
4. The servicing dealer will inspect the unit, advise you whether the product is defective and, if so, make all repairs necessary to correct the defect without extra charge to you.

If for any reason you are dissatisfied with the dealer's analysis of the defect or the service he performs, we urge you to contact us. Write:

TORO "Customer Care" Department
8111 Lyndale Avenue South
Minneapolis, Minnesota 55420

MAINTENANCE RECORD

MAINTENANCE RECORD
