FORM NO. 3324-586

Traction Cable Support Kit

for Greensmaster® 3200 & 3250

Part No. 104-2059

Installation Instructions

1. Park traction unit on a level surface, set parking brake and stop engine. Remove the key from ignition.

⚠ CAUTION

POTENTIAL HAZARD
- **If you leave the key in the ignition switch, someone could start the engine.**

WHAT CAN HAPPEN
- **Accidental starting of the engine could seriously injure you or other bystanders.**

HOW TO AVOID THE HAZARD
- **Remove the key from the ignition switch before you do any maintenance.**

2. Loosen jam nuts securing adjusting pin to spring bracket (Fig. 1).

3. Unhook spring from neutral arm.(Fig. 1).

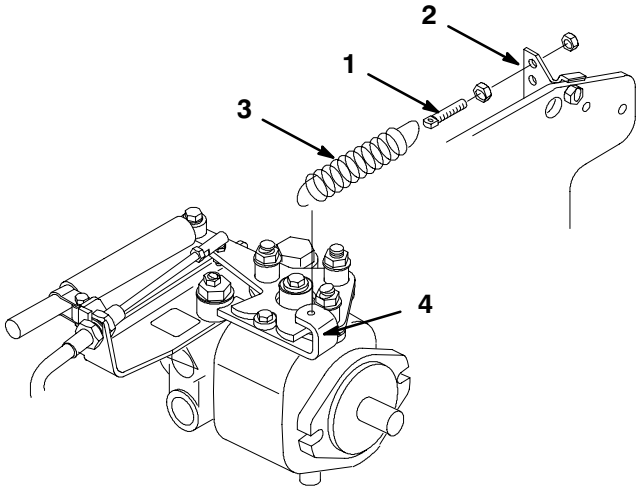

Figure 1

1. Adjusting pin
2. Spring bracket
3. Spring
4. Neutral arm

4. Remove nut, tube spacer, (2) washers and capscrew securing lever damper to cable support (Fig. 2).

5. Remove nut, pivot spacer, washer and capscrew securing other end of lever damper to pump lever (Fig. 2).

6. Loosen jam nuts securing traction cable to cable support (Fig. 2).

7. Remove lock nut securing traction cable ball joint to pump lever (Fig. 2).

©The Toro Company - 2000
All Rights Reserved

Printed in USA

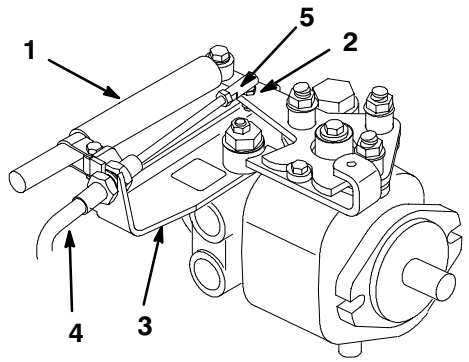

Figure 2

1. Lever damper
2. Pump lever
3. Cable support
4. Traction cable
5. Traction cable ball joint

8. Remove lock nut securing traction stud, thrust washer and neutral arm to cable support (Fig. 3). Remove and retain components.

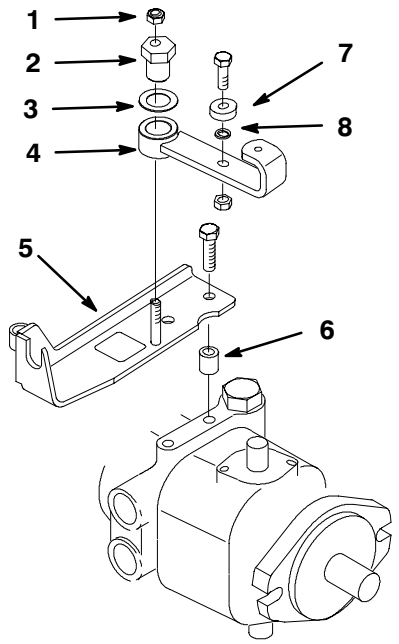

Figure 3

1. Locknut
2. Traction stud
3. Thrust washer
4. Neutral arm
5. Cable support
6. Spacer
7. Ball bearing
8. Spacer

9. Remove (2) capscrews securing spacers and cable support to pump (Fig. 3).Discard cable support, spacers and capscrews.

10. Remove capscrew and nut securing ball bearing and spacer to neutral arm (Fig. 3).

11. With new M8-1.25x25 capscrew, re-install ball bearing and new bearing spacer to neutral arm with existing nut (Fig. 4).

12. Mount new cable support to pump with (2) 3/8-16 x 3/4" lg. capscrews (Fig. 4).

13. Reinstall neutral arm to new cable support with thrust washer, traction stud and locknut previously removed (Fig. 4).

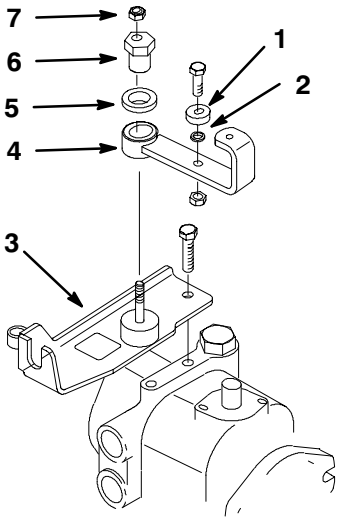

Figure 4

1. Ball bearing
2. New bearing spacer
3. New cable support
4. Neutral arm
5. Thrust washer
6. Traction stud
7. Locknut

14. Rotate traction cable ball joint 180° and secure to **underside** of pump lever with locknut previously removed (Fig. 5).

15. Secure traction cable to cable support with jam nuts previously removed (Fig. 5).

16. Secure lever damper to **underside** of pump lever with capscrew, washer, pivot spacer and nut previously removed (Fig. 5).

17. Mount lever damper to cable support with capscrew, (2) washers, tube spacer and nut previously removed (Fig. 5).

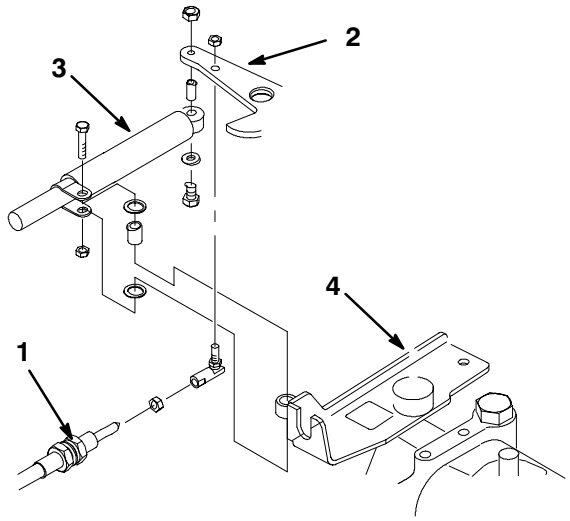

Figure 5

1. Traction cable
2. Pump lever
3. Lever damper
4. Cable support

18. Thread a jam nut onto adjusting pin until the outer edge, of nut, is 1/2” from head of adjusting pin (Fig. 6).

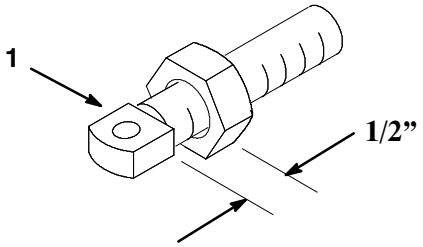

Figure 6

1. Adjusting pin

19. Hook spring onto neutral arm and adjusting pin (Fig. 7).

20. Secure adjusting pin to spring bracket with jam nut (Fig. 7).

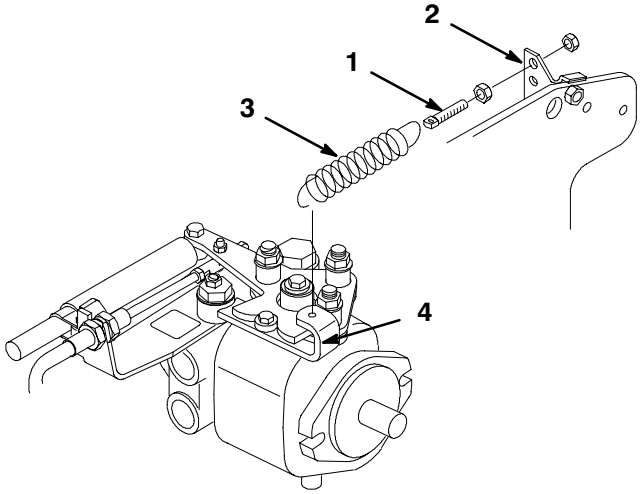

Figure 7

1. Adjusting pin
2. Spring bracket
3. Spring
4. Neutral arm

Adjusting the Transmission for Neutral

If the machine “creeps” when the traction control pedal is in the neutral position, the neutral return mechanism must be adjusted.

1. Block up under the frame so one of the front wheels is off the floor.

2. Start the engine, move the throttle to SLOW, and check the front wheel that is off the floor; it must not be rotating.

3. If the wheel is rotating, stop the engine and proceed as follows:

A. Loosen both jam nuts securing the traction control cable to the cable support on the pump (Fig. 8). Make sure the jam nuts are loosened equally and sufficiently to allow adjustment.

B. Loosen the nut securing the traction stud (eccentric) to the top of the pump (Fig. 8).

C. Move the functional control lever to neutral and the throttle to slow. Start the engine.

D. Rotate the eccentric until creep does not occur in either direction. When the wheel stops rotating, tighten the nut locking the eccentric and adjustment (Fig. 8). Verify the adjustment with the throttle in the SLOW and FAST position.

E. From each side of the cable support, tighten the locknuts **evenly**, securing the traction cable to the cable support (Fig. 8). Do not twist the cable.

Note: If cable tension exists when in neutral, the machine may creep when the functional control lever is moved to the Mow or Transport position.

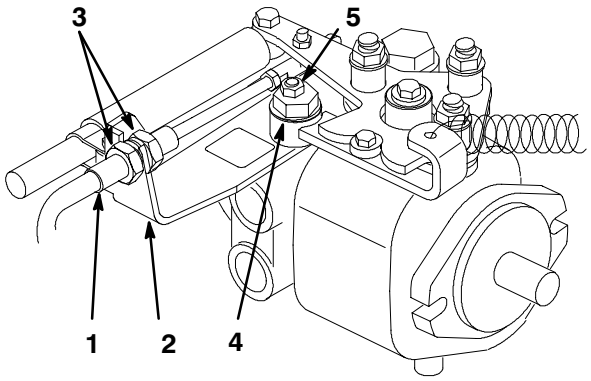

Figure 8

1. Traction cable
2. Cable support
3. Jam nuts
4. Traction stud (eccentric)
5. Locknut