Form No. 3324-604

TORO®

53 cm Lawn Mower

Walk Power Lawn Mower

Model No. 20711—200000001 and Up

Operator's Manual

CE

International English (GB)

Contents

	Page
Introduction	2
Safety	3
General Lawn Mower Safety	3
Sound Pressure Level	5
Sound Power Level	5
Vibration Level	5
Symbol Glossary	5
Assembly	8
Installing the Handle	8
Adjusting the Handle Height	8
Installing the Cover Plate and the Guard Plate	9
Before Starting	10
Mixing Gasoline and Oil	10
Operation	11
Controls	12
Starting the Engine	12
Stopping the Engine	12
Using the Self-propel Drive	12
Adjusting the Cutting Height	13
Operating Tips	13
Maintenance	15
Recommended Maintenance Schedule	15
Servicing the Air Filter	16
Maintaining the Spark Plug	16
Cleaning the Underside of the Lawn Mower Housing	17
Adjusting the Self-propel Drive Cable	17
Lubricating the Self-propel Drive	18
Cleaning the Self-propel Drive	18
Maintaining the Blade	19
Cleaning the Exhaust Ports	21
Emptying the Fuel Tank	22
Troubleshooting	22
Storage	23
Preparing the Fuel System	23
Preparing the Engine	23
Folding the Handle	24
Removing the Lawn Mower from Storage	24
Accessories	24

Introduction

Thank you for choosing a Toro product. We want you to be completely satisfied with your new purchase.

Read this manual carefully to learn how to operate and maintain your product properly. The information in this manual can help you and others avoid injury and product damage. Although Toro designs and produces safe products, you are responsible for operating the product properly and safely.

Whenever you contact your Authorized Service Dealer or the factory for help with service, genuine Toro parts, or additional information, have the model number and the serial number of your product handy. You will find the model number and serial number decal on the product as illustrated in Figure 1.

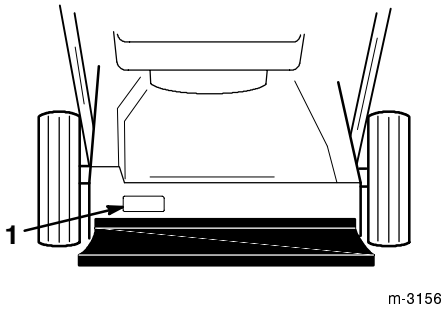

Figure 1

1. Model number and serial number decal

Write the product model number and serial number in the space below:

Model No. _____

Serial No. _____

This manual identifies potential hazards and has special safety messages that help you and others avoid personal injury and even death. DANGER, WARNING, and CAUTION are words used to identify the level of hazard.

DANGER signals an extreme hazard that will cause serious injury or death if you do not follow the recommended precautions.

WARNING signals a hazard that may cause serious injury or death if you do not follow the recommended precautions.

©2000 **The Toro Company**
All Rights Reserved

Printed in USA

CAUTION signals a hazard that may cause minor or moderate injury if you do not follow the recommended precautions.

This manual uses two other words to highlight information. **Important** calls attention to special mechanical information and **Note** emphasizes general information worthy of special attention.

Safety

Toro designed this lawn mower for cutting grass, or, when equipped with a grass bag, for catching cut grass. Any use for purposes other than these could prove dangerous to the operator or to bystanders.

WARNING

POTENTIAL HAZARD
- **Engine exhaust contains carbon monoxide, which is an odorless, deadly poison.**

WHAT CAN HAPPEN
- **Carbon monoxide can kill you.**

HOW TO AVOID THE HAZARD
- **Do not run the engine indoors or in an enclosed area.**

To ensure maximum safety, best performance, and to gain knowledge of the product, it is essential that you and any other operator of the lawn mower read and understand the contents of this manual before the engine is ever started. Pay particular attention to the safety alert symbol ⚠ which means CAUTION, WARNING, OR DANGER — "personal safety instruction." Read and understand the instruction because it has to do with safety. Failure to comply with instruction may result in personal injury.

General Lawn Mower Safety

The following instructions have been adapted from the ANSI/OPEI standard B71.1—1998 and ISO standard 5395:1990(E). Information or terminology specific to Toro lawn mowers is enclosed in parenthesis.

This cutting machine is capable of amputating hands and feet and throwing objects. Failure to observe the following safety instructions could result in serious injury or death.

Training

- Read the instructions carefully. Be familiar with the controls and the proper use of the equipment before starting.
- See manufacturer's instructions for proper operation and installation of accessories. Only use accessories approved by the manufacturer.
- Never allow children or people unfamiliar with these instructions to use the mower. Local regulations may restrict the age of the operator.
- Never mow while people, especially children, or pets are nearby. Stop mower if anyone enters the area.

Tragic accidents can occur if the operator is not alert to the presence of children. Children are often attracted to the mower and the mowing activity. **Never** assume that children will remain where you last saw them.

- Keep children out of the mowing area and under the watchful care of a responsible adult.
- Be alert and turn mower off if children enter the area.
- Use extra care when approaching blind corners, shrubs, trees, or other objects that may obscure vision.
- Keep in mind that the operator or user is responsible for accidents or hazards occurring to other people or their property.

Preparation

- While mowing, always wear substantial footwear and long trousers.
- Do not operate the equipment when barefoot or wearing open sandals.
- Always wear safety goggles or safety glasses with side shields when operating mower.
- Thoroughly inspect the area where the equipment is to be used and remove all stones, sticks, wires, bones, and other foreign objects.
- **Warning: Gasoline is highly flammable.** Take the following precautions:
  - Store fuel in containers specifically designed for this purpose.
  - Refuel outdoors only and do not smoke while refuelling.
  - Add fuel before starting the engine. Never remove the cap of the fuel tank or add gasoline while the engine is running or when the engine is hot.
  - If gasoline is spilled, do not attempt to start the engine but move the machine away from the area of spillage and avoid creating any source of ignition until gasoline vapors have dissipated.
  - Replace all fuel tank and container caps securely.
  - If the fuel tank has to be drained, do this outdoors.
- Replace faulty mufflers.

- Before using, always visually inspect to see that the blades, blade bolts, and cutter assembly are not worn or damaged. Replace worn or damaged blades and bolts in sets to preserve balance.
- On multibladed machines, take care as rotating one blade can cause other blades to rotate.

Operation

- Do not operate the engine in a confined space where dangerous carbon monoxide fumes can collect.
- Mow only in daylight or in good artificial light.
- Always be sure of your footing on slopes.
- Walk; never run.
- Keep a firm hold on the handle.
- For wheeled rotary machines, mow across the face of slopes, never up and down.
- Exercise extreme caution when changing direction on slopes.
- Do not mow excessively steep slopes.
- Use extreme caution when reversing or pulling the mower toward you.
- Before and while moving backward, look behind and down for small children.
- Stop the blade(s) if the mower has to be tilted for transportation when crossing surfaces other than grass and when transporting the mower to and from the area to be mowed.
- Never operate the mower with damaged or missing guards or shields, or without safety devices; for example, deflectors and/or grass catchers in place.
- Do not change the engine governor settings or overspeed the engine.
- Disengage all blade and drive clutches before starting the engine.
- Start the engine carefully according to instructions and with feet well away from the blade(s).
- Do not tilt when starting the engine, unless the mower has to be tilted for starting. In this case, do not tilt it more than absolutely necessary and lift only the part which is away from the operator.
- Do not start the engine when standing in front of the discharge chute.
- Do not put hands or feet near or under rotating parts. Keep clear of the discharge opening at all times.
- Never pick up or carry a mower while the engine is running.
- Stop the engine and disconnect the spark plug lead
  - before clearing blockages or unclogging chute;
  - before checking, cleaning, or working on the mower;
  - after striking a foreign object. Inspect the mower for damage and make repairs before restarting and operating the mower;
  - if mower starts to vibrate abnormally (check immediately).
- Stop the engine
  - whenever you leave the mower;
  - before refuelling.
- Reduce the throttle setting during engine run-out and, if the engine is provided with a shut-off valve, turn the fuel off at the conclusion of mowing.
- Stop the blade(s) when crossing gravel drives, walks, or roads.
- Shut the engine off and wait until the blade comes to complete stop before removing grass catcher.
- Do not operate the mower while under the influence of alcohol or drugs.
- If the equipment should start to vibrate abnormally, stop the engine and check immediately for the cause. Vibration is generally a warning of trouble.

Slopes are a major factor related to slip and fall accidents which can result in a severe injury. If you feel uneasy on a slope, do not mow it.

- Watch for holes, ruts, or bumps. Tall grass can hide obstacles.
- **Do not** mow near drop-offs, ditches, or embankments. The operator could lose footing or balance.
- **Do not** mow on wet grass. Reduced footing could cause slipping.

Maintenance and Storage

- Keep all nuts, bolts (especially blade attachment bolts), and screws tight to be sure the equipment is in safe working condition.
- Never store the equipment with gasoline in the tank inside a building where fumes may reach an open flame or spark.
- Allow the engine to cool before storing in any enclosure.
- To reduce the fire hazard, keep the engine, muffler, battery compartment, and gasoline storage area free of grass, leaves, or excessive grease.

- Check the grass catcher frequently for wear or deterioration.
- Replace worn or damaged parts for safety.
- Use extra care when handling gasoline; vapors are explosive.
- Never tamper with safety devices. Check their proper operation regularly.
- Keep the mower free of grass, leaves, or other debris build-up. Clean up oil or fuel spillage.
- Stop and inspect the equipment if you strike an object. Repair, if necessary, before restarting.
- Never attempt to make wheel height adjustments while the engine is running.
- Always disconnect electric mowers (live operated) before cleaning, repairing, or adjusting.
- Grass catcher components are subject to wear, damage, and deterioration, which could expose moving parts or allow objects to be thrown. Frequently check components and replace with manufacturer's recommended parts when necessary.
- Mower blades are sharp and can cut. Wrap the blade(s) or wear gloves, and use extra caution when servicing them.
- Do not change the engine governor setting or overspeed the engine.
- To ensure the best performance and safety, purchase only genuine Toro replacement parts and accessories. **Do not use "will fit" parts and accessories; they may cause a safety hazard.**

Sound Pressure Level

This unit has an equivalent continuous A-weighted sound pressure at the operator ear of 88.5 dB(A), based on measurements of identical machines per ANSI B71.5-1984 procedures.

Sound Power Level

This unit has a sound power level of 100 dB(A)/1 pW, based on measurements of identical machines per Directive 84/538/EEC and amendments.

Vibration Level

This unit has a maximum hand-arm vibration level of 10.51 m/s2, based on measurement of identical machines per ISO 5349 procedures.

Symbol Glossary

Safety alert triangle — symbol within triangle indicates a hazard.



Safety alert symbol



Read operator's manual.



Consult technical manual for proper service procedures.



Do not open or remove safety shields while engine is running.

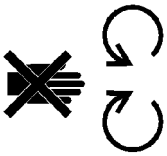

Rotating blade can cut off toes or fingers. Stay clear of mower blade as long as engine is running.



To avoid blade failure when mulching, use blade stiffener when mower is equipped with mulching plug.

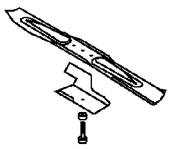

Transmission

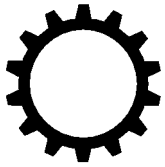

Stay a safe distance from the machine.

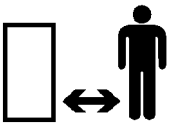

Stay a safe distance from the mower.

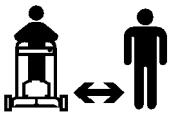

Throw or flying objects — Whole body exposure



Thrown or flying objects — Rotary side-mounted mower. Keep deflector shield in place.

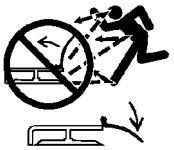

Stop engine before leaving operator position.



Hourmeter/elapsed operating hours

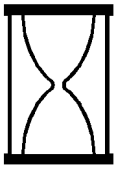

Fast



Slow



Decreasing/Increasing



Oil



On/Run



Engage

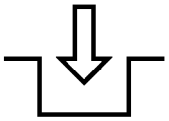

Disengage

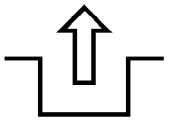

Battery charging condition

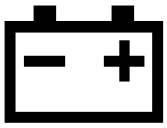

Fuel



Neutral



First gear



Second gear



Grease lubrication point



Engine start

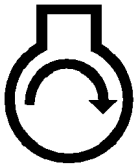

Engine stop



Choke

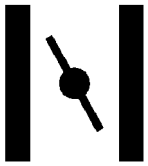

Primer (start aid)

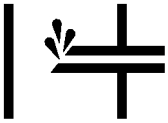

Push primer three times.

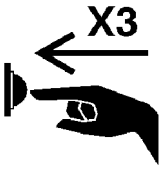

Properly dispose of batteries.



Insert key in ignition switch.



Turn key in ignition switch.



Third gear



Cutting element — basic symbol



Cutting element — height adjustment



Pull rope.

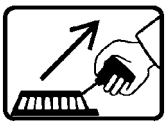

Wheel



Wheel traction



Lower control bar.



Raise control bar.



Raise/lower control bar.



Move control.



Move control forward.

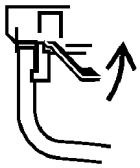

Move control rearward.

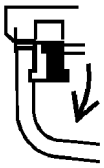

Raise/lower control bar.

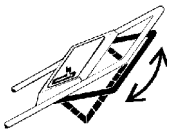

Raise control bar.



Assembly

Note: Determine the left and right sides of the lawn mower by standing in the operating position.

Installing the Handle

WARNING

POTENTIAL HAZARD
- **Folding or unfolding the handle improperly can pinch, stretch, or damage one or more of the cables.**

WHAT CAN HAPPEN
- **Any pinched, stretched, or damaged cable may cause an operational failure that results in an unsafe operating condition.**

HOW TO AVOID THE HAZARD
- **Do not pinch, stretch, or damage the cables.**
- **Handle the cables with care when folding or unfolding the handle.**
- **Do not use the lawn mower if one or more of the cables are pinched, stretched, or damaged. Contact your Authorized Service Dealer.**

1. Loosen the handle knobs and lift the top handle half in an arc until the handle halves are in line and nest together (Fig. 2).

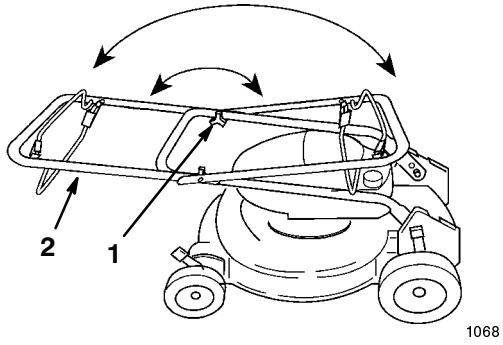

Figure 2

1. Knob (2)
2. Top handle half

2. Tighten the knobs securely.

Note: Rotate the handle toward the rear of the lawn mower until it snaps into the stops in the handle brackets.

Adjusting the Handle Height

The handle has two height settings: high and low (Fig. 3). Select the handle height position that is most comfortable for you.

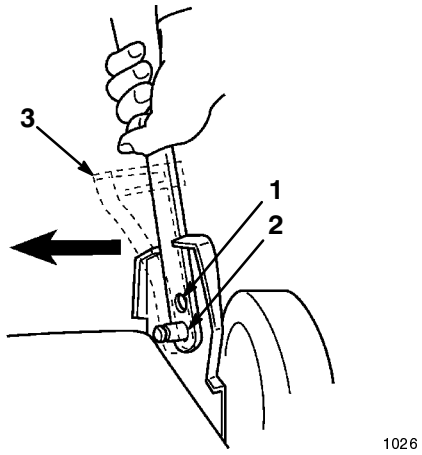

Figure 3

1. Low setting
2. High setting
3. Cable anchor

1. Squeeze the bottom handle section together and align the holes over the pins inside the handle brackets.

Note: You may need to loosen and slightly move the belt cover out of the away to make enough room to set the handle to the high setting.

2. Slide the cable anchor on the handle to align the hole and locate it over the pin inside the handle bracket.

3. Adjust the self-propel drive cable. See *Adjusting the Self-propel Drive Cable* on page 17.

Installing the Cover Plate and the Guard Plate

Toro shipped your lawn mower with a cover plate and a guard plate. To use the side discharge, install the cover plate in the deck opening and the guard plate over the side discharge opening.

WARNING

POTENTIAL HAZARD

- **Leaving the discharge opening uncovered allows the lawn mower to throw objects in the operator's or bystander's direction. Also, contact with the blade can occur.**

WHAT CAN HAPPEN

- **Thrown objects or blade contact can cause serious injury.**

HOW TO AVOID THE HAZARD

- **Never operate the lawn mower unless you install the cover plate, the guard plate, or the optional grass chute and catcher.**

1. Stop the engine and wait for all moving parts to stop.

2. Disconnect the spark plug wire (Fig. 4)

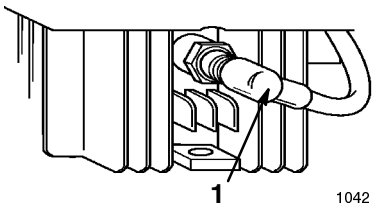

Figure 4

1. Spark plug wire

3. Remove the screw that fastens the cover plate to the housing (Fig. 5).

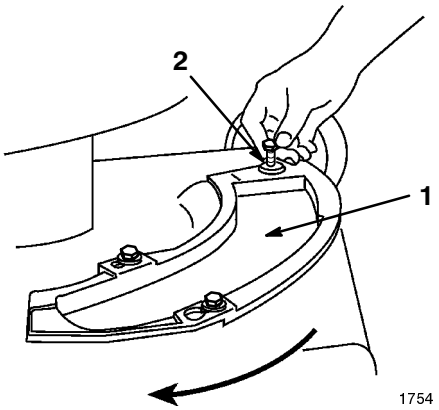

Figure 5

1. Cover plate
2. Screw

Note: You do not need to loosen or remove the two shoulder bolts on the housing that protrude through the slotted holes in the cover plate. The cover plate moves over the shoulder bolt heads (Fig. 6).

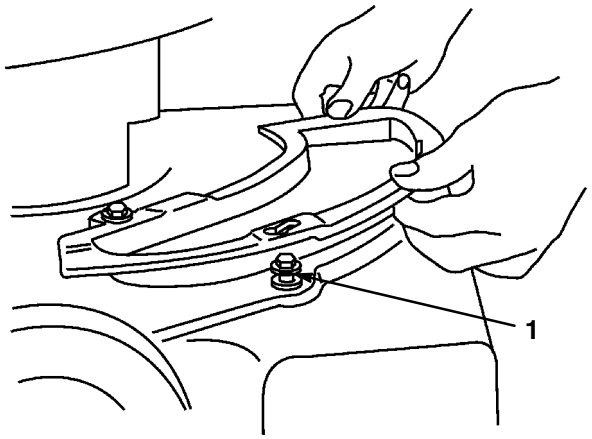

Figure 6

1. Shoulder bolt

4. Slide the cover plate clockwise to install it or counterclockwise to remove it.

5. Secure the cover plate with the screw.

6. Install the guard plate over the side discharge opening (Fig. 7).

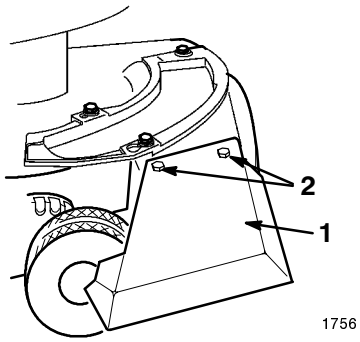

Figure 7

1. Guard plate 2. Bolt and nut

7. Secure the guard plate with two bolts and nuts.

8. Connect the wire to the spark plug.

Before Starting

Mixing Gasoline and Oil

Your Toro lawn mower is powered by a two-cycle engine which requires a 32:1 mixture of gasoline and oil.

Use only clean, fresh, lead-free gasoline (including oxygenated or reformulated gasoline) with an octane rating of 87 or higher. To ensure freshness, purchase only the amount of gasoline you expect to use in 30 days. Using unleaded gasoline results in fewer combustion chamber deposits and longer spark plug life.

IMPORTANT: Do not use methanol, gasoline containing methanol, gasohol containing more than 10% ethanol, premium gasoline, or white gas. Using these fuels can damage the engine's fuel system.

DANGER

POTENTIAL HAZARD
- **In certain conditions, gasoline is extremely flammable and highly explosive.**

WHAT CAN HAPPEN
- **A fire or explosion from gasoline can burn you and others and can damage property.**

HOW TO AVOID THE HAZARD
- **Fill the fuel tank outdoors, in an open area, and when the engine is cold. Wipe up any gasoline that spills.**
- **Do not fill the fuel tank completely full. Add gasoline to the fuel tank until the level is 1/4 to 1/2 inch (6 to 13 mm) below the bottom of the filler neck. This empty space in the tank allows gasoline to expand.**
- **Never smoke when handling gasoline, and stay away from an open flame or where a spark may ignite the gasoline fumes.**
- **Store gasoline in an approved container and keep it out of the reach of children.**
- **Never buy more than a 30-day supply of gasoline.**

DANGER

POTENTIAL HAZARD
- **When fueling under certain circumstances, a static charge can develop, igniting the gasoline.**

WHAT CAN HAPPEN
- **A fire or explosion from gasoline can burn you and others and damage property.**

HOW TO AVOID THE HAZARD
- **Always place gasoline containers on the ground away from your vehicle before filling.**
- **Do not fill gasoline containers inside a vehicle or on a truck or trailer bed because interior carpets or plastic truck bed liners may insulate the container and slow the loss of any static charge.**
- **When practical, remove gasoline-powered equipment from the truck or trailer and refuel the equipment with its wheels on the round.**
- **If this is not possible, then refuel such equipment on a truck or trailer from a portable container, rather than from a gasoline dispenser nozzle.**
- **If you must use a gasoline dispenser nozzle, keep the nozzle in contact with the rim of the fuel tank or container opening at all times until fueling is complete.**

Use the a fuel stabilizer/conditioner regularly in all Toro gasoline-powered products during operation and storage. A stabilizer/conditioner cleans the engine during operation and prevents gum-like varnish deposits from forming in the engine during periods of storage.

IMPORTANT: Do not use fuel additives except a fuel stabilizer during storage. Do not use fuel stabilizers with an alcohol base such as ethanol, methanol, or isopropanol. You do not need a stabilizer if you use a two-cycle oil with added stabilizer.

Use *Toro 2-Cycle 32:1 Engine Oil* or an equivalent premium grade, NMMA TCW III-certified two-cycle oil. *Toro 2-Cycle 32:1 Engine Oil* is formulated specifically for Toro two-cycle engines to provide superior lubrication, easy starting, and long engine life.

IMPORTANT: Do not use automotive oil (i.e., SAE 30 or 10W30), a two-cycle oil that is not NMMA TCW III-certified, or a fuel mixed at the wrong gasoline/oil ratio. This can cause engine damage not covered under the Toro warranty.

Substitute oils may produce more exhaust smoke, require more frequent engine service, and reduce engine life.

Note: Failing to use the proper oil or the 32:1 gasoline-to-oil mixture ratio can result in serious engine damage.

Add *Toro 2-Cycle 32:1 Engine Oil* or an equivalent oil to fresh, unleaded gasoline according to the chart below:

32:1 Gasoline-to-Oil Ratio Mixing Chart	
Gasoline	Oil
1 gallon (3.8 liters)	4 ounces (118 ml)
2 gallons (7.6 liters)	8 ounces (237 ml)
5 gallons (19 liters)	20 ounces (591 ml)

To properly mix the gasoline and oil:

1. Pour half of the desired amount of fresh, unleaded gasoline into a clean, approved gasoline container.
2. Add the full amount of *Toro 2-Cycle 32:1 Engine Oil* or an equivalent oil to the gasoline.
3. Install the cap on the gasoline container.
4. Shake the gasoline-and-oil mixture thoroughly.
5. Slowly remove the cap and add the remaining amount of gasoline.

Note: Do not mix gasoline and oil in the fuel tank. Oil at room temperature mixes easier and more thoroughly than cold oil. Oil below 32°F (0°C) requires additional mixing.

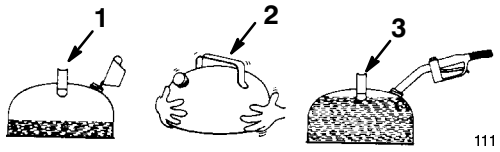

Figure 8

1. Add oil to half of the gasoline
2. Install the cap and shake the can to mix
3. Add the remaining amount of gasoline

IMPORTANT: Do not overfill the fuel tank. The gasoline/oil mix must have room to expand.

6. Clean around the fuel tank cap (Fig. 9).

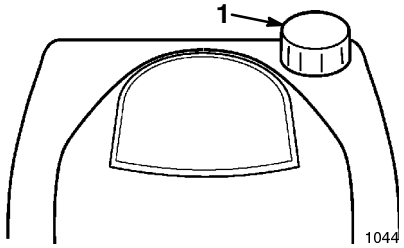

Figure 9

1. Fuel tank cap

7. Remove the fuel tank cap and fill the fuel tank with the gasoline-and-oil mixture to within 1/4 inch (6 mm) from the top of the tank. **Do not fill into the filler neck.**
8. Install the fuel tank cap securely and wipe up any spilled fuel.

Operation

Each time before you mow, make sure that the self-propel drive and the blade control bail operate properly. When you release the blade control bail, the engine and the blade should stop. If they do not, contact an Authorized Service Dealer.

Controls

The starter handle and the blade control bail are on the upper handle as shown in Figure 10.

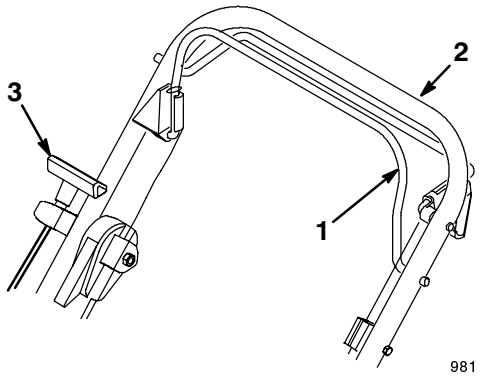

Figure 10

1. Blade control bail
2. Upper handle
3. Starter handle

Starting the Engine

1. Move the throttle lever to the (*Fast*) position (Fig. 11).

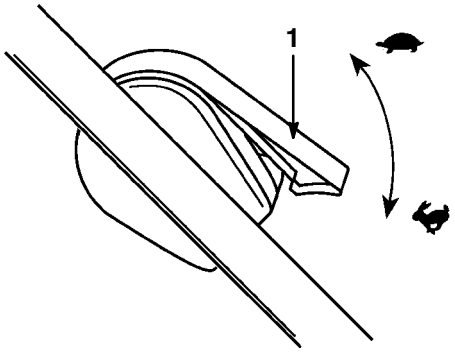

Figure 11

1. Throttle lever

2. Push the primer three times (Fig. 12), waiting about two seconds between each push.

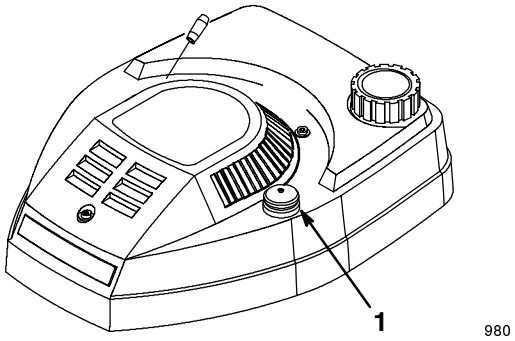

Figure 12

1. Primer

IMPORTANT: Do not use the primer to start a warm engine after a brief shutdown.

3. Hold the blade control bail against the upper handle (Fig. 10).

4. Pull the starter handle lightly until you feel resistance, then pull it sharply (Fig. 10). Allow the rope to return to the handle slowly.

Note: If the engine fails to start after three pulls, repeat steps 2 through 4.

Stopping the Engine

1. Move the throttle lever to the (*Slow*) position (Fig. 11).

2. Release the blade control bail. Both the engine and the blade should stop. If they do not stop properly, contact your Authorized Service Dealer.

Using the Self-propel Drive

1. To engage the self-propel drive, squeeze the self-propel drive bail against the handle and hold it (Fig. 13).

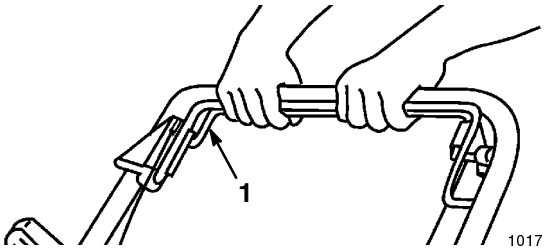

Figure 13

1. Self-propel drive bail

Note: The maximum self-propel ground speed is fixed. To reduce the ground speed, increase the space between the self-propel drive bail and the handle.

2. To disengage self-propel drive, release self-propelled bail (Fig. 14).

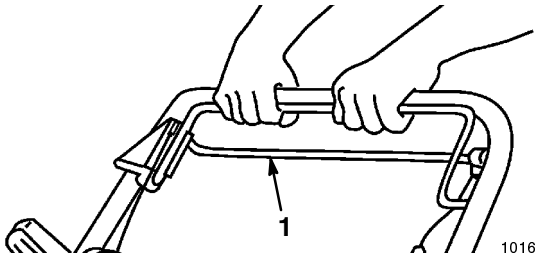

Figure 14

1. Self-propel drive bail

Note: The lawn mower comes with freewheeling clutches that make it easier for you to pull the lawn mower backward. To disengage the clutches, you may need to push the lawn mower forward one inch after you release the self-propel drive bail.

Adjusting the Cutting Height

You can adjust each wheel individually with a wheel height adjustment lever. Cutting heights are 1 inch (25 mm); 1-1/2 inches (38 mm); 2 inches (51 mm); 2-1/2 inches (64 mm); 3 inches (76 mm); and 3-1/2 inches (89 mm).

DANGER

POTENTIAL HAZARD
- **Adjusting the height-of-cut levers could bring your hands into contact with the moving blade.**

WHAT CAN HAPPEN
- **Contact with a rotating blade can cause serious injury.**

HOW TO AVOID THE HAZARD
- **Stop the engine and wait for all movement to stop before adjusting the cutting height.**
- **Do not put your fingers under the lawn mower housing when adjusting the cutting height.**

1. Pull the wheel height adjustment lever toward the wheel and move it to the desired position (Fig. 15).

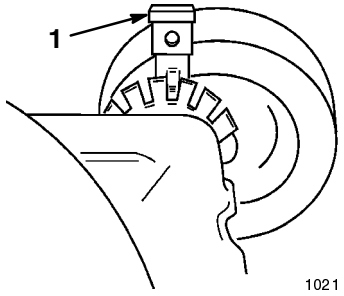

Figure 15

1. Wheel height adjustment lever

2. Release the wheel height adjustment lever and seat it securely in the notch.

Note: Set all four wheels at the same height.

Operating Tips

- Review the safety instructions and read this manual carefully before operating the lawn mower.
- Clear the area of sticks, stones, wire, branches, and other debris that the lawn mower could pick up or the blade could hit and throw objects.

- Keep everyone, especially children and pets, away from the area of operation.
- Avoid striking trees, walls, curbs, or other solid objects. Never deliberately mow over any object.
- If the lawn mower strikes an object or starts to vibrate, immediately stop the engine, disconnect the spark plug wire, and examine the lawn mower for damage.
- Maintain a **sharp blade** throughout the cutting season. Periodically file down nicks on the blade.
- Replace the blade when necessary with an original Toro replacement blade.
- Mow only dry grass or leaves. Wet grass and leaves tend to clump on the yard and can cause the lawn mower to plug or the engine to stall.

WARNING

POTENTIAL HAZARD
- **Wet grass or leaves can cause you to slip and contact the blade.**

WHAT CAN HAPPEN
- **Blade contact can seriously injure you.**

HOW TO AVOID THE HAZARD
- **Mow only in dry conditions.**

- Clean the clippings or leaves from the underside of the lawn mower deck after each mowing. See *Cleaning the Underside of the Lawn Mower Housing* on page 17.
- Keep the engine in good running condition.

WARNING

POTENTIAL HAZARD
- **Operating a lawn mower with its engine running at a speed greater than the factory setting can cause an unsafe operating condition.**

WHAT CAN HAPPEN
- **The lawn mower could throw a part of the blade or engine into the operator's or bystander's area and cause serious personal injury or death.**

HOW TO AVOID THE HAZARD
- **Do not change the engine speed setting.**
- **If you suspect the engine speed is faster than normal, contact your Authorized Service Dealer.**

Cutting Grass

- Grass grows at different rates at different times of the year. In the summer heat, it is best to cut grass at the 2-, 2-1/2-, or 3-inch cutting height settings. Cut only about a third of the grass blade at a time. Do not cut below the 2-inch setting unless the grass is sparse or it is late fall when grass growth begins to slow down.
- When cutting grass over six inches tall, first mow using the highest cutting height setting and walking slower; then mow again at a lower setting for best lawn appearance. If the grass is too long and the leaves clump on top of the lawn, the lawn mower may plug and cause the engine to stall.
- Alternate the mowing direction. This helps disperse the clippings over the lawn for even fertilization.

If the finished cut lawn appearance is unsatisfactory, try one or more of the following:

- Sharpen the blade.
- Walk at a slower pace while mowing.
- Raise the cutting height setting on your lawn mower.
- Cut the grass more frequently.
- Overlap cutting swaths instead of cutting a full swath with each pass.
- Mow across the marginal areas a second time.
- Set the cutting height on the front wheels one notch lower than the rear wheels.

Cutting Leaves

- After cutting the lawn, make sure that half of the lawn shows through the cut leaf cover. You may need to make one or more passes over the leaves.
- For light leaf coverage, set all the wheels at the same cutting height setting.
- If there are more than five inches (12.7 cm) of leaves on the lawn, set the front wheels one or two notches higher than the rear wheels. This makes it easier to feed the leaves under the lawn mower deck.
- Slow down your mowing speed if the lawn mower does not cut the leaves finely enough.
- If you cut up a lot of oak leaves, you can add lime to your grass in the spring to reduce the acidity of the oak leaves.

Maintenance

Recommended Maintenance Schedule

Service Item	Service Operation	5 Hours	25 Hours	50 Hours	100 Hours
Fasteners	Check the blade and the engine mounting fasteners frequently. Keep all nuts, bolts, and screws tight to ensure safe operation.	X			
Air Filter	Remove and clean the air filter each season or every 25 hours. **Clean the filter more frequently in dusty operating conditions.**		X		
Spark Plug	Clean, inspect, and gap the spark plug. Replace it if necessary.		X		
Housing	Clean any built-up grass clippings and dirt.		X		
Self-propel Drive	Clean the grass clippings and debris under the belt cover and the drive belt.		X		
Blade	Sharpen or replace the blade; maintain it more frequently if the edge dulls quickly in rough or sandy conditions.			X	
Blade Brake	Check the stopping time every 50 hours or at the start of each lawn mowing season. The blade must stop within three seconds of releasing the bail; if it does not, see your Authorized Service Dealer for repair.			X	
Lubrication	Grease the rear height adjustor brackets.			X	
Exhaust Ports	Check the exhaust ports every 50 hours or at least once each season.			X	
Fuel System	Check for leakage and/or a deteriorating fuel hose. Replace it if necessary.			X	
Cooling System	Clean any grass clippings, debris, or dirt that clog engine air cooling fins and starter. Clean it more frequently under dirty or high chaff conditions.				X

CAUTION

POTENTIAL HAZARD
- **If you leave the wire on the spark plug, someone could start the engine.**

WHAT CAN HAPPEN
- **Someone accidentally starting the engine could seriously injure you or other bystanders.**

HOW TO AVOID THE HAZARD
- **Remove the wire from the spark plug before you do any maintenance. Set the wire aside so it does not accidentally contact the spark plug.**

Servicing the Air Filter

Clean the air filter once every season or every 25 operating hours; clean it more frequently under dusty conditions.

IMPORTANT: Do not operate the engine without the air filter element; extreme engine wear or damage will occur.

1. Snap the cover latch open, swing the cover to the side, and unhook it (Fig. 16).

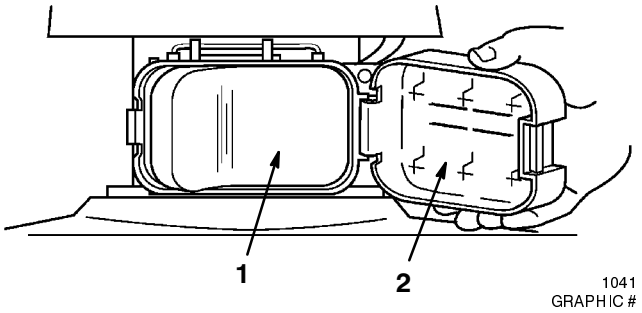

Figure 16

1. Filter
2. Cover

2. Remove the air filter.
3. Wash the air filter in laundry detergent or kerosene (Fig. 17).

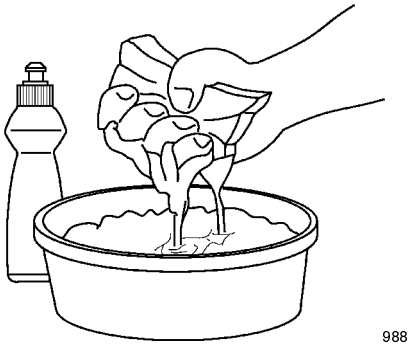

Figure 17

4. Squeeze the filter to remove the excess liquid and blot it dry with a paper towel or rag.
5. Apply one tablespoon of *SAE 30W* oil to the air filter (Fig. 18).

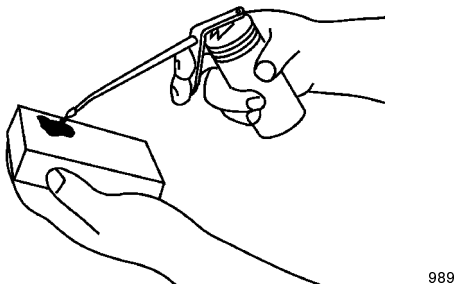

Figure 18

6. Squeeze the filter until the oil is distributed evenly throughout the filter. Blot the filter lightly with a paper towel to remove the excess oil.
7. Replace the filter with the cleanest side facing the carburetor.

Note: Be sure that the filter fully seats into the air box and is smooth and not folded over, allowing air and dirt to directly pass through.

Maintaining the Spark Plug

Use a *Champion RJ12C* spark plug or equivalent. Set the gap to 0.035 inch (0.89 mm). Remove the spark plug and check its condition once each season or after every 25 operating hours.

1. Stop the engine and wait for all moving parts to stop.
2. Disconnect the wire from the spark plug (Fig. 19).

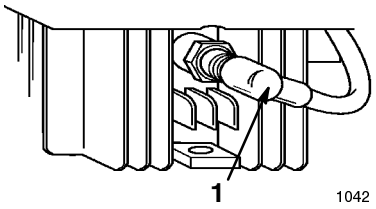

Figure 19

1. Spark plug wire

3. Clean around the spark plug and remove it from the cylinder head.

IMPORTANT: Replace a cracked, fouled, or dirty spark plug. Do not clean the electrodes because engine damage could result from grit entering the cylinder.

4. Set the gap on the new plug as shown in Figure 20.

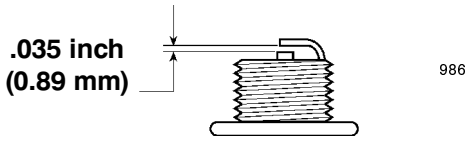

Figure 20

5. Install the spark plug by hand; then torque the spark plug to 15 ft-lb (180 in-lb or 20 N·m).
6. Connect the wire to the spark plug.

Cleaning the Underside of the Lawn Mower Housing

A clean lawn mower housing provides the best cutting performance. Check for grass buildup and clean it after each use.

Washing Method

1. Move the lawn mower to a flat concrete or asphalt surface near a garden hose.
2. Start the engine.
3. Hold the running garden hose at handle level and direct the water to flow on the ground just in front of the right rear tire (Fig. 21).

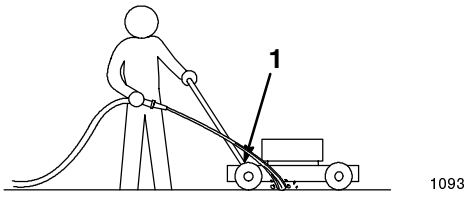

Figure 21

1. Rear right wheel

The blade will draw in water and wash out clippings. Let the water run until the clippings no longer come out from under the housing.

4. Stop the engine and wait for all moving parts to stop.
5. Turn off the garden hose.
6. Start the lawn mower and let it run for a few minutes to dry out the moisture on the lawn mower and its components.
7. While the engine runs, engage and disengage the traction drive several times to dry it out.

Scraping Method

If washing does not remove all debris from under the lawn mower, tip it and scrape it clean.

1. Disconnect the wire from the spark plug (Fig. 19).
2. Drain the fuel from the fuel tank. Refer to the *Emptying the Fuel Tank* on page 22.

WARNING

POTENTIAL HAZARD
- **Gasoline is extremely flammable, highly explosive and under certain conditions can cause personal injury or property damage.**

WHAT CAN HAPPEN
- **Tipping the lawn mower may cause fuel leakage from the carburetor or fuel tank.**

HOW TO AVOID THE HAZARD
- **Avoid fuel spills by running the engine dry or removing the fuel with a hand pump; never siphon.**

3. Tip the lawn mower onto its side (Fig. 22).

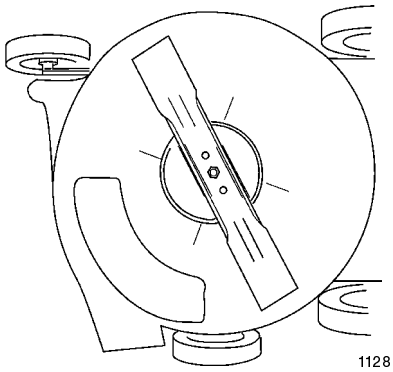

Figure 22

4. Remove dirt and grass clippings with a hardwood scraper. Avoid burrs and sharp edges.

IMPORTANT: Move the blade as little as possible to avoid starting problems.

5. Turn the lawn mower upright.
6. Fill the fuel tank with a fresh gasoline-and-oil mixture.
7. Connect the spark plug wire.

Adjusting the Self-propel Drive Cable

If the top speed begins to decrease on the lawn mower, adjust the self-propel drive cable.

1. Stop the engine and wait for all moving parts to stop.
2. Loosen the cable support nut (Fig. 23).

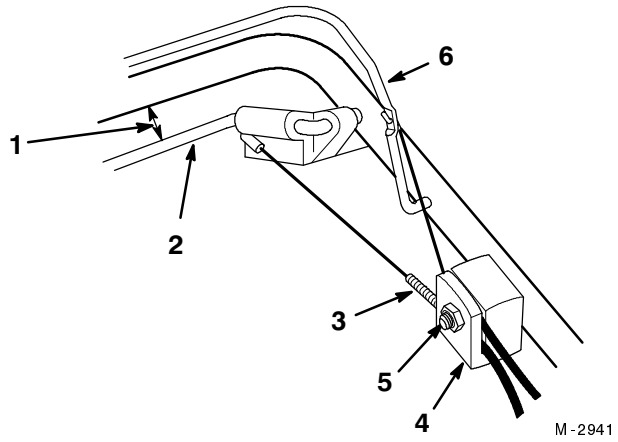

Figure 23

1. 1 to 1 1/2 in. (25 to 38 mm)
2. Self-propel drive control
3. Cable jacket
4. Cable support
5. Nut
6. Blade brake control

3. Hold the self-propel drive control 1 to 1 1/2 inches (25 to 38 mm) from the handle (Fig. 23).
4. Pull the cable jacket down (away from the control) to remove the slack in the cable (Fig. 23).
5. Tighten the cable support nut.
6. Release the bail and check to see that the cable is loose.

Note: The cable must be loose when you release the bail; otherwise, the lawn mower may creep forward when you disengage the bail.

Lubricating the Self-propel Drive

1. Wipe the grease fittings on the rear wheel height adjustment levers (Fig. 24) with a clean rag.

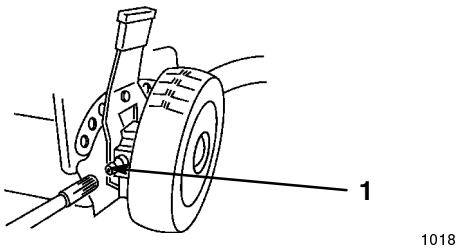

Figure 24

1. Grease fitting

2. Install a grease gun onto each fitting in turn and gently apply one or two pumps of #2 multi-purpose lithium grease to each.

IMPORTANT: Excess grease may damage the seals and prevent the wheel clutch from properly operating.

Cleaning the Self-propel Drive

Clippings can collect under the belt drive cover and in the pulley groove. This can cause the belt to slip and the self-propel drive to lose power or fail to disengage. Clean the grass clippings and debris from under the belt cover every 25 operating hours.

1. Remove the screw and slide the belt cover to the rear, unhooking the tab on front of the cover from the deck opening (Figs. 25 and 26).

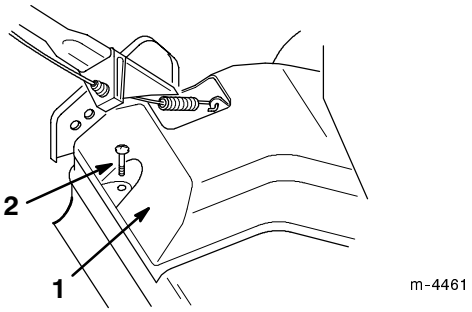

Figure 25

1. Belt cover
2. Screw

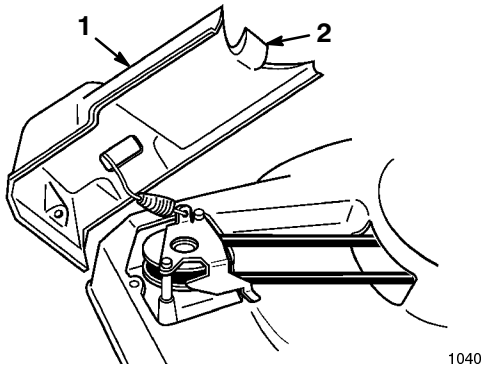

Figure 26

1. Belt cover
2. Tab

2. Tilt the cover up to the side and remove the debris from under the cover and the pulley groove (Fig. 26).
3. Reverse the procedure to install the belt cover.

Maintaining the Blade

A straight, sharp blade provides the best cutting performance. Regularly inspect and sharpen the blade.

WARNING

POTENTIAL HAZARD
- **The blade is sharp.**

WHAT CAN HAPPEN
- **Contact with a sharp blade can cause serious personal injury.**

HOW TO AVOID THE HAZARD
- **Wear gloves or wrap the sharp edges of the blade with a rag.**

1. Stop the engine and wait for all moving parts to stop.
2. Disconnect the wire from the spark plug (Fig. 19).

WARNING

POTENTIAL HAZARD
- **Gasoline is extremely flammable, highly explosive and under certain conditions can cause personal injury or property damage.**

WHAT CAN HAPPEN
- **Tipping the lawn mower may cause fuel leakage from the carburetor or fuel tank.**

HOW TO AVOID THE HAZARD
- **Avoid fuel spills by running the engine dry or removing the fuel with a hand pump; never siphon.**

3. Drain the fuel from the fuel tank. Refer to the *Emptying the Fuel Tank* on page 22.
4. Tip the lawn mower onto its side (Fig. 27).

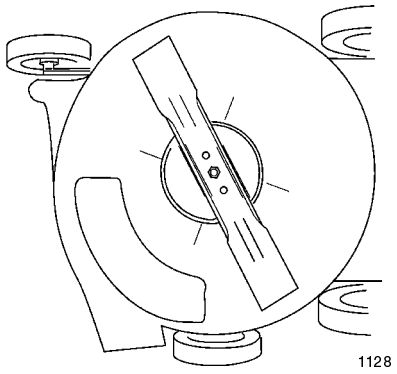

Figure 27

Inspecting the Blade

Carefully examine the blade for sharpness and wear, especially where the flat and the curved parts meet (Fig. 28A). Because sand and abrasive material can wear away the metal that connects the flat and curved parts of the blade, check the blade before using the lawn mower. If you notice a slot or wear (Figs. 28B and 28C), replace the blade; refer to *Removing the Blade* on page 19.

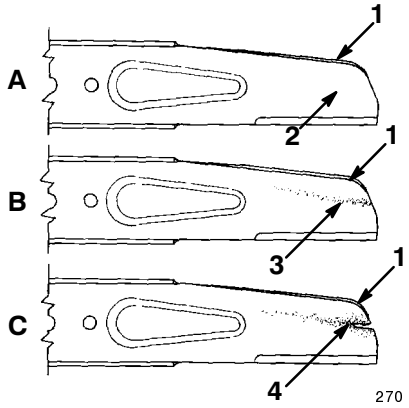

Figure 28

1. Sail
2. Flat part of blade
3. Wear
4. Slot formed

Note: For the best performance, install a new blade before the cutting season begins. During the year, file down any small nicks to maintain the cutting edge.

DANGER

POTENTIAL HAZARD
- **A worn or damaged blade could break and a piece of the blade could be thrown into the operator's or bystander's area.**

WHAT CAN HAPPEN
- **A thrown piece of the blade could cause serious personal injury or death to the operator or bystanders.**

HOW TO AVOID THE HAZARD
- **Inspect the blade periodically for wear or damage.**
- **Replace a worn or damaged blade.**

Removing the Blade

1. Grasp the end of the blade using a rag or a thickly padded glove.
2. Remove the blade nut (Fig. 29).

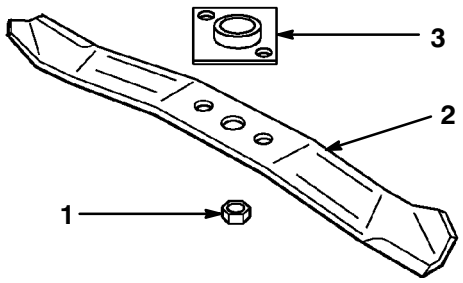

Figure 29

1. Blade nut
2. Blade
3. Blade driver

3. Remove the blade from the blade driver (Fig. 29).
4. Examine the blade cutting edges for nicks, cutting angle, and sharpness. Sharpen or replace the blade if necessary.
5. Examine the blade driver for bent or sheared drive lugs. Replace them if necessary.

Sharpening the Blade

File the top side of the blade to maintain its original cutting angle (Fig. 30A) and inner cutting edge radius (Fig. 30B). The blade will remain balanced if you remove the same amount of material from both cutting edges.

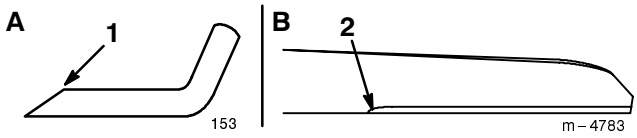

Figure 30

1. Sharpen at this angle only
2. Maintain the original radius here

Note: Do not grind the blade more than 5 inches (127 mm) from the outside ends and no less than 2 inches (51 mm) from the trailing edge (Fig. 31).

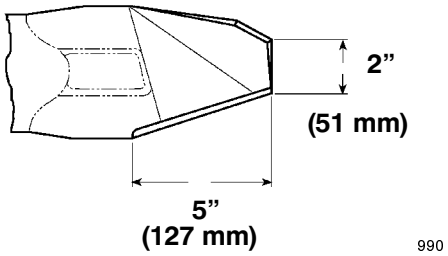

Figure 31

Balancing the Blade

1. Check the balance of the blade by placing the center hole of the blade over a nail or screwdriver shank clamped horizontally in a vise (Fig. 32).

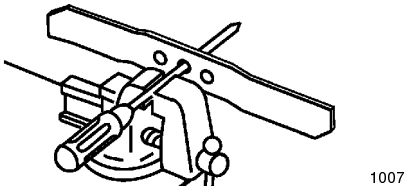

Figure 32

Note: You can also check the balance using a commercially manufactured, blade balancer.

2. If either end of the blade rotates downward, file that end (not the cutting edge or the end near the cutting edge). The blade is properly balanced when neither end drops.

Installing the Blade

1. Install the blade driver onto the crankshaft (Fig. 29).
2. Position the blade over the blade driver lugs with the curved ends facing toward the lawn mower housing (Fig. 29).
3. Secure the blade with the blade nut (Fig. 29).
4. Tighten the blade nut to 47 ft-lb (63 N·m).

Note: Replace the blade nut after installing and removing it four times. Otherwise, the locking feature decreases and the nut may come loose.

5. Connect the wire to the spark plug.

Cleaning the Exhaust Ports

Carbon deposit buildup causes excessive engine wear and a loss of power. Check and clean the exhaust ports as recommended in the *Recommended Maintenance Schedule* on page 15.

1. Remove the spark plug (Fig. 19).
2. Drain the fuel from the fuel tank; refer to *Emptying the Fuel Tank* on page 22.
3. Tip the lawn mower onto its side.

WARNING

POTENTIAL HAZARD
- **Gasoline is extremely flammable, highly explosive, and, under certain conditions, can cause personal injury or property damage.**

WHAT CAN HAPPEN
- **Tipping the lawn mower may cause the fuel to leak from the carburetor or the fuel tank.**

HOW TO AVOID THE HAZARD
- **Avoid spilling fuel by running the engine dry or remove the fuel with a hand pump; never siphon the fuel.**

4. Remove the blade nut and the blade (Fig. 29). Refer to *Removing the Blade* on page 19.
5. Remove the blade driver by tapping it with a plastic or fiber hammer in the direction of rotation (Fig. 33). This loosens the blade driver from the taper on the crankshaft.

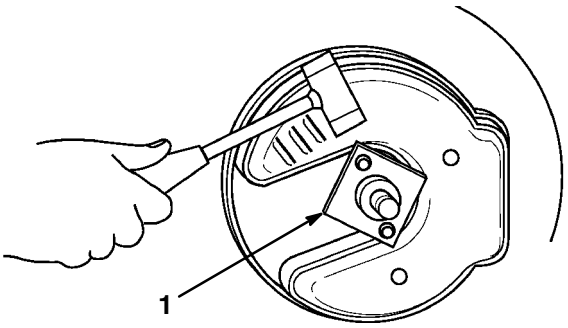

Figure 33

1. Blade driver

6. Remove the capscrews that attach the muffler cover and the baffle plate to the engine mounting plate (Fig. 34).

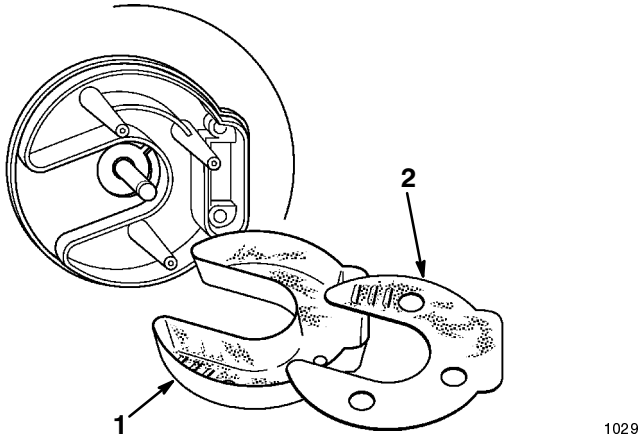

Figure 34

1. Muffler cover 2. Baffle plate

7. Clean the carbon deposits from the muffler cover and the baffle plate with a wire brush; make sure that the exhaust vents are clear. Wipe the muffler clean with a paper towel or rag.
8. Rotate the crankshaft slowly until the piston covers the exhaust ports (Fig. 35).

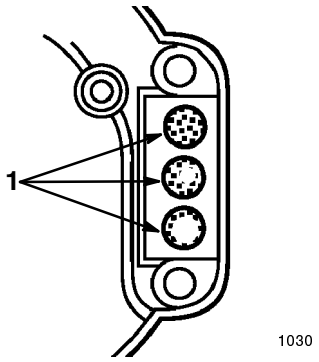

Figure 35

1. Exhaust ports

9. Use a 3/8-inch wooden dowel to loosen the carbon deposits by inserting the dowel into the ports.

Note: Do not use metal tools; they can scratch the piston.

10. Set the lawn mower upright.
11. Hold the blade control bail against the upper handle (Fig. 10) and pull the starter rope several times to blow out the loose carbon.
12. Install the baffle and the muffler cover to the engine mounting plate (Fig. 34). Torque the muffler capscrews to 155 in-lb (13 ft-lb or 18 N·m).
13. Attach the blade driver and the blade with the blade nut. Refer to *Installing the Blade* on page 20.
14. Tip the lawn mower upright.

15. Connect wire to the spark plug wire.

16. Fill the fuel tank with a clean, fresh gasoline-and-oil mixture.

Emptying the Fuel Tank

1. Stop the engine and wait for it to cool.

IMPORTANT: Drain the fuel from a cold engine only.

2. Disconnect the wire from the spark plug (Fig. 19).

3. Remove the cap from the fuel tank (Fig. 9).

4. Use a pump-type syphon to drain the fuel into a clean approved fuel container.

5. Connect the wire onto the spark plug.

6. Run the engine until it stops.

7. Start the engine again to make sure that all the fuel is out of the carburetor.

Troubleshooting

Toro designed and built your lawn mower for trouble-free operation. Check the following components and items carefully. If a problem continues, see your Authorized Service Dealer.

PROBLEM	CORRECTIVE ACTION
Engine will not start	1. Fill the fuel tank with a fresh gasoline-and-oil mixture. 2. Move the throttle lever to the *Fast* position. 3. Press the primer three times. 4. Connect the wire to the spark plug. 5. Clean the spark plug, check the spark plug gap, and replace the spark plug if it is damaged.
Engine starts hard or loses power	1. Drain and fill the fuel tank with a fresh gasoline-and-oil mixture. 2. Clean the fuel tank cap vent hole or replace the fuel tank cap. 3. Clean or replace the air filter element. 4. Clean the lawn mower discharge chute. 5. Clean the underside of the lawn mower deck. 6. Clean the spark plug, check the spark plug gap, and replace the spark plug if it is damaged.
Engine runs rough	1. Connect the wire to the spark plug. 2. Clean the spark plug, check the spark plug gap, and replace the spark plug if it is damaged. 3. Move the throttle lever from the *Slow* to the *Fast* position. 4. Clean or replace the air filter element.
Lawn mower or engine vibrates excessively	1. Balance the blade. 2. Tighten the blade mounting nut. 3. Clean the lawn mower discharge chute. 4. Clean the underside of the lawn mower deck. 5. Tighten the engine mounting bolts.

PROBLEM	CORRECTIVE ACTION
Uneven cutting pattern	1. Place all four wheels at the same height. 2. Sharpen and balance the blade. 3. Change the mowing pattern. 4. Clean the underside of lawn mower deck.
Discharge chute plugs	1. Move throttle lever from the *Slow* to the *Fast* position. 2. Raise the cutting height. 3. Allow the grass to dry before mowing. 4. Clean the underside of lawn mower deck.
Lawn Mower will not self-propel	1. Adjust the self-propel drive cable. 2. Clean the debris under the belt cover.

Storage

To prepare the lawn mower for off-season storage, perform the recommended maintenance procedures. Refer to *Maintenance* on page 15.

Store the lawn mower in a cool, dry place. Cover the lawn mower to keep it clean and protected.

Preparing the Fuel System

WARNING

POTENTIAL HAZARD
- **Gasoline can vaporize if you store it over long periods of time.**

WHAT CAN HAPPEN
- **Vaporized gasoline can explode if it comes into contact with an open flame.**

HOW TO AVOID THE HAZARD
- **Do not store gasoline over long periods of time.**
- **Do not store the lawn mower with gasoline in the fuel tank or the carburetor in an enclosure with an open flame. (For example, a furnace or a water heater pilot light.)**
- **Allow the engine to cool before storing it in any enclosure.**

We recommend a fuel conditioner to stabilize the fuel for storage. If possible, treat the last fuel fill of the season with a fuel conditioner.

1. Add a petroleum distillate-based fuel stabilizer to the fuel tank according to the manufacturer's instructions (typically one ounce per gallon of fuel).

IMPORTANT: Do not use a fuel stabilizer with an alcohol base such as ethanol, methanol, or isopropanol.

2. Run the engine for five minutes to distribute the conditioned fuel throughout the fuel system.
3. Stop the engine and allow it to cool.
4. Drain the fuel from the fuel tank; refer to *Emptying the Fuel Tank* on page 22.
5. Dispose of the fuel properly. Recycle it according to local codes, or use it in your automobile.
6. Start the engine and run it until it stops from running out of fuel.
7. Choke or prime the engine and start it again.
8. Allow the engine to run until it stops. When you can no longer start the engine, it is sufficiently dry.

Note: Do not store stabilized gasoline for more than 90 days.

Preparing the Engine

1. Remove the spark plug.
2. Using an oil can, add about one tablespoon of oil to the engine through the spark plug hole (Fig. 36).

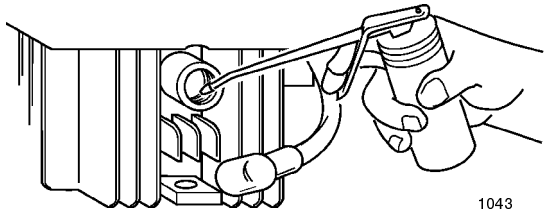

Figure 36

3. Slowly rotate the engine several times, using the starter rope, to distribute the oil.
4. Install the spark plug but **do not** connect the wire to the spark plug.

Folding the Handle

WARNING

POTENTIAL HAZARD
- **Folding or unfolding the handle improperly can pinch, stretch, or damage one or more of the cables.**

WHAT CAN HAPPEN
- **Any pinched, stretched, or damaged cable may cause an operational failure that results in an unsafe operating condition.**

HOW TO AVOID THE HAZARD
- **Do not pinch, stretch, or damage the cables.**
- **Handle the cables with care when folding or unfolding the handle.**
- **Do not use the lawn mower if one or more of the cables are pinched, stretched, or damaged. Contact your Authorized Service Dealer.**

1. Squeeze the bottom handle section together and slide it past the stops of the handle brackets (Fig. 37).

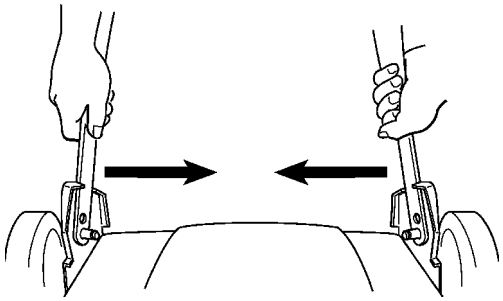

Figure 37

2. Rotate the handle toward the front of the lawn mower (Fig. 38).

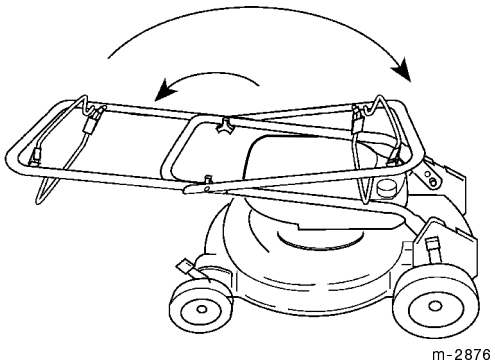

Figure 38

3. Loosen the knobs that secure the top handle section to the bottom section.
4. Fold the top handle section back toward the rear of the lawn mower into its storage position.

Removing the Lawn Mower from Storage

1. Unfold the handle. Refer to *Installing the Handle* on page 8.

WARNING

POTENTIAL HAZARD
- **Folding or unfolding the handle improperly can pinch, stretch, or damage one or more of the cables.**

WHAT CAN HAPPEN
- **Any pinched, stretched, or damaged cable may cause an operational failure that results in an unsafe operating condition.**

HOW TO AVOID THE HAZARD
- **Do not pinch, stretch, or damage the cables.**
- **Handle the cables with care when folding or unfolding the handle.**
- **Do not use the lawn mower if one or more of the cables are pinched, stretched, or damaged. Contact your Authorized Service Dealer.**

2. Check and tighten all fasteners.
3. Remove the spark plug (Fig. 19) and spin the engine rapidly using the starter to blow out the excess oil from the cylinder.
4. Clean the spark plug or replace it if it is cracked, broken, or if the electrodes are worn.
5. Install the spark plug and torque it to 180-in-lb (15 ft-lb or 20 N·m).
6. Perform the recommended maintenance procedures; refer to *Maintenance* on page 15.
7. Fill the fuel tank with a fresh, clean gasoline-and-oil mixture.
8. Connect the wire to the spark plug.

Accessories

Accessories may have come with your lawn mower or are available from your Authorized Service Dealer:

- Rear Bag Kit