Form No. 3424-142 Rev B

TORO®

Count on it.

Parts Catalog

Pro Sweep®

Turf Sweeper

Model No. 07068—Serial No. 403380001 and Up

Register at www.Toro.com.
Original Instructions (EN)

CE

3424-142 B

Ordering Replacement Parts

To order replacement parts, please supply the part number, the quantity, and the description of each part desired.

Understanding Reference Numbers

Each identified part in an illustration has a reference number. The reference number for a part also appears in the parts list, along with other information about the part.

This catalog uses two special reference number formats, one to indicate parts in a service assembly and another to indicate the quantity of a given part in an illustration.

Service Assembly Reference Numbers

Parts in service assemblies have reference numbers in the form a:b. The a represents the reference number of the entire service assembly and the b represents a sequential number unique to each part within the service assembly.

For example, a wheel assembly might be identified by reference number 6, the tire by 6:1, the valve by 6:2, and the wheel by 6:3. When you order the assembly identified by reference number 6, you receive all parts identified by reference numbers 6:1,6:2, and 6:3. However, you may also order any part individually. Reference numbers of this type appear in illustration and in parts lists.

Reference Numbers Indicating Quantity

In an illustration, if a reference number indicates more than one part, the reference number has the form nX y. The n represents the quantity of the part, the X is the multiplication symbol, and the y represents the reference number.

For example, in an illustration, the reference number 2X 37 means that two of the parts identified by reference number 37 are indicated.

Contents

Main Frame and Axle Assembly 4
Trailer Axle Assembly No. 107-1529. 5
Pitch Frame and Cylinder Assembly 6
Hydraulic Cylinder Assembly No. 138-5901 7
Saddle Frame Assembly 8
Brush Housing Assembly 9
Brush, Motor and Shield Assembly 10
Hydraulic Motor Assembly No. 105-9455. 11
Brush Assembly No. 117-8310 12
Roller Assembly 13
Hopper and Baffle Assembly 14
Hopper Lid and Baffle Assembly 15
Hydraulic Manifold Valve and Hose Routing Assembly 16
Hydraulic Manifold Assembly No. 117-8366 17
Hydraulic Manifold Assembly No. 112-6752 18
Hydraulic Fitting Assembly 19
Cable Tie Assembly 20
Tongue Assembly. 21
Hydraulic Cylinder Assembly No. 138-5902 22
Electrical Assembly 23
Proximity Sensor System Assembly 24
Windrow Assembly. 25
Attachments and Accessories 26

© 2020—The Toro® Company
8111 Lyndale Avenue South
Bloomington, MN 55420

Contact us at www.Toro.com.
Printed in the USA.
All Rights Reserved

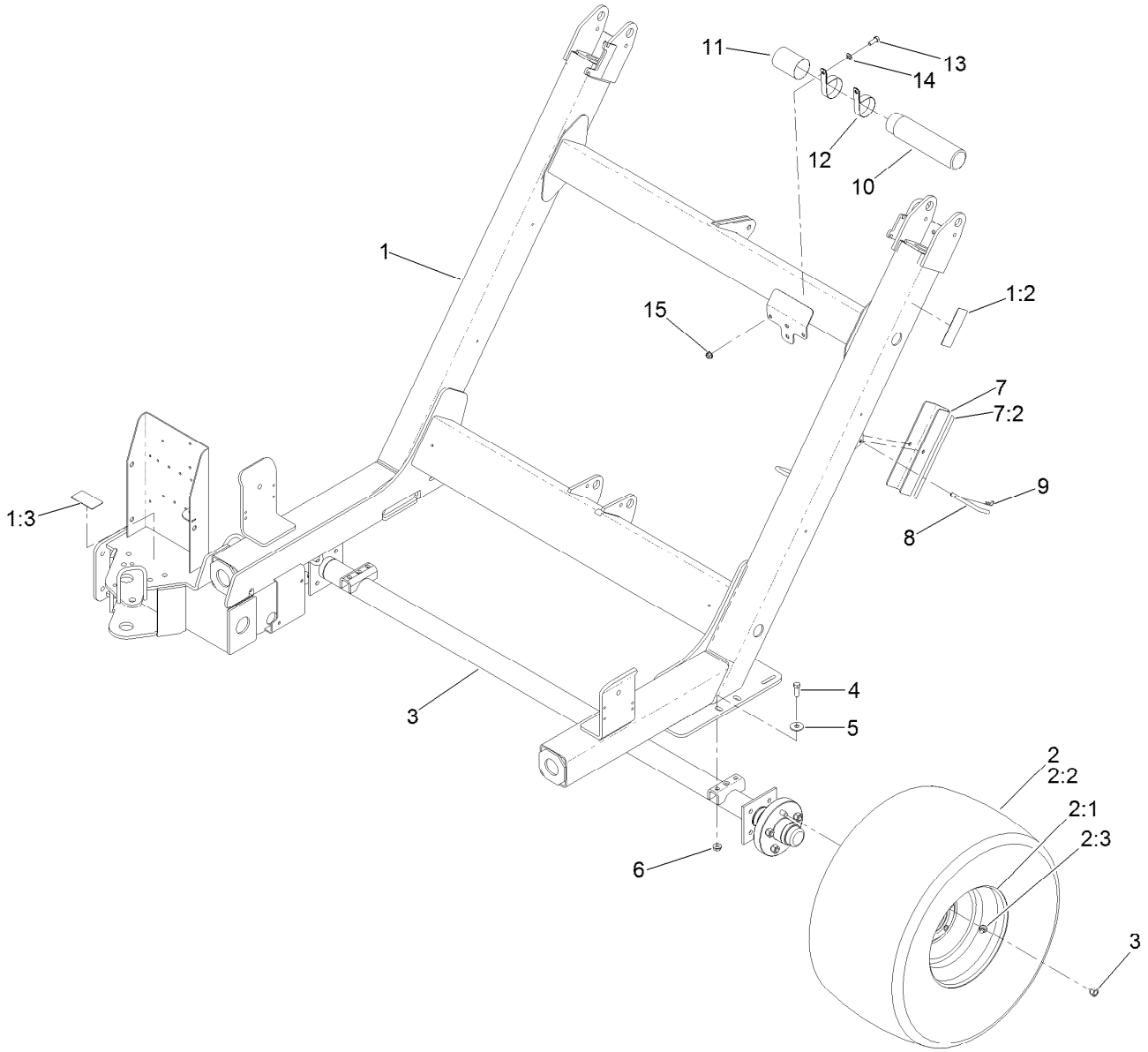

Main Frame and Axle Assembly

Ref.	Part Number	Qty.	Description
1	115-8985	1	Frame-Main
1:2	108-0865	2	Decal-Pinchpoint
1:3	108-0866	1	Decal-Pinchpoint
2	137-6608	2	Wheel And Tire ASM
2:1	137-6607	1	Rim
2:2	117-5196	1	Tire
2:3	232-24	1	Stem-Valve
3	107-1529	1	Trailer Axle ASM
4	324-5	4	Screw-HH
5	63-3340	4	Washer-Support
6	32128-42	4	Nut-HF

Ref.	Part Number	Qty.	Description
7	108-0777	1	Stop-Cylinder
7:2	93-9852	1	Decal-Warning
8	63-7880	1	Pin-Latch, Brake
9	3290-250	1	Pin-Cotter
10	104-7050	1	Tube-Manual
11	104-7048	1	Cap-Housing
12	2412-133	2	Clamp-R
13	323-6	2	Screw-HH
14	3256-24	2	Washer-Flat
15	104-8301	2	Nut-HF, NI

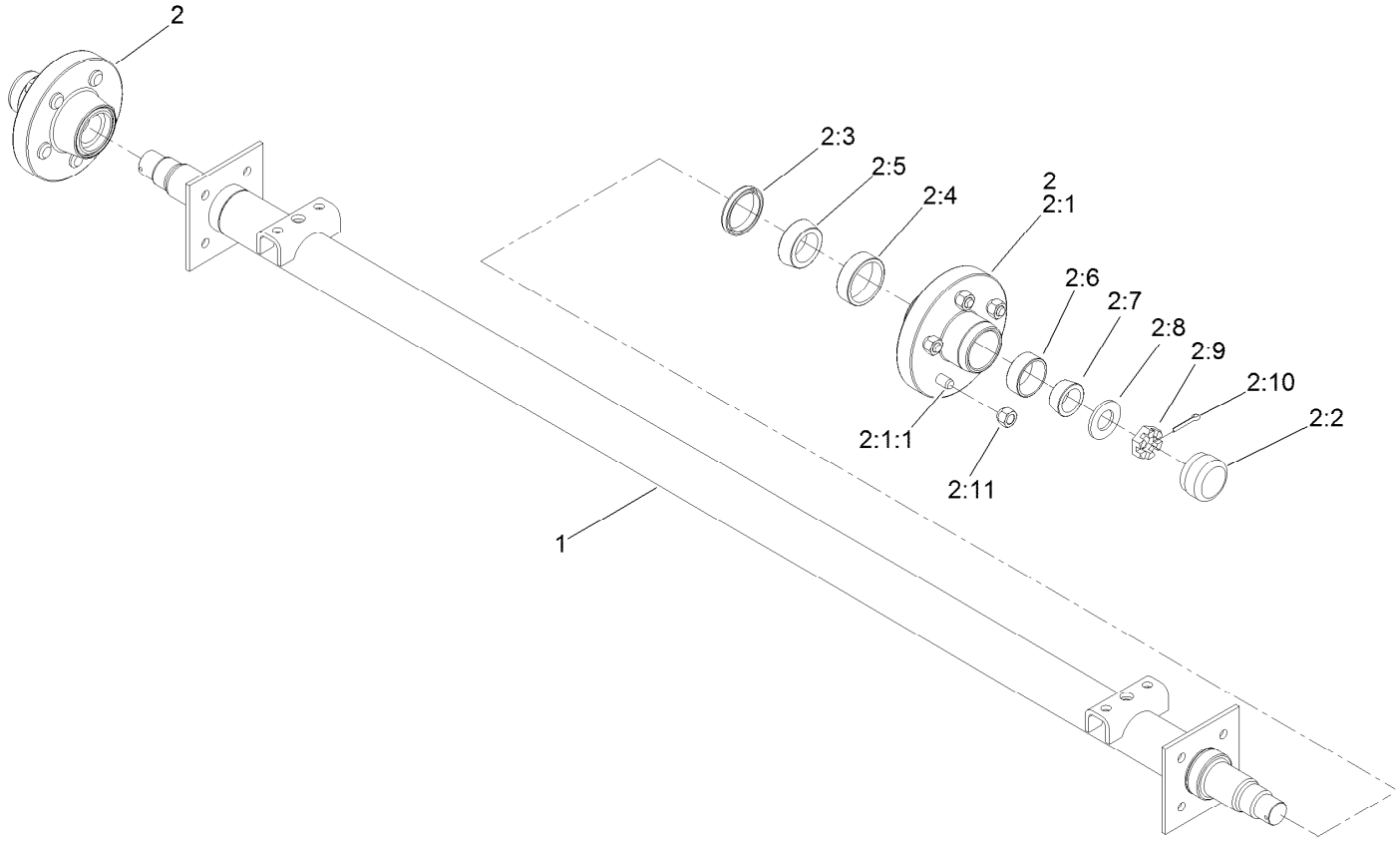

Trailer Axle Assembly No. 107-1529

Ref.	*Part Number*	*Qty.*	*Description*
1	107-1300	1	Axle-Trailer
2	108-0689	2	Wheel Hub Kit
2:1	107-1528	1	Hub-Wheel
2:1:1	107-1503	5	Stud-Wheel
2:2	108-0693	1	Cap-Grease
2:3	108-0694	1	Seal-Grease
2:4	108-0695	1	Cup-Bearing, Inner
2:5	108-0696	1	Cone-Bearing, Inner
2:6	108-0697	1	Cup-Bearing, Outer
2:7	108-0698	1	Cone-Bearing, Outer
2:8	3256-62	1	Washer-Flat
2:9	99-4508	1	Nut-Castle
2:10	3272-22	1	Pin-Cotter
2:11	242-50	5	Nut-Lug

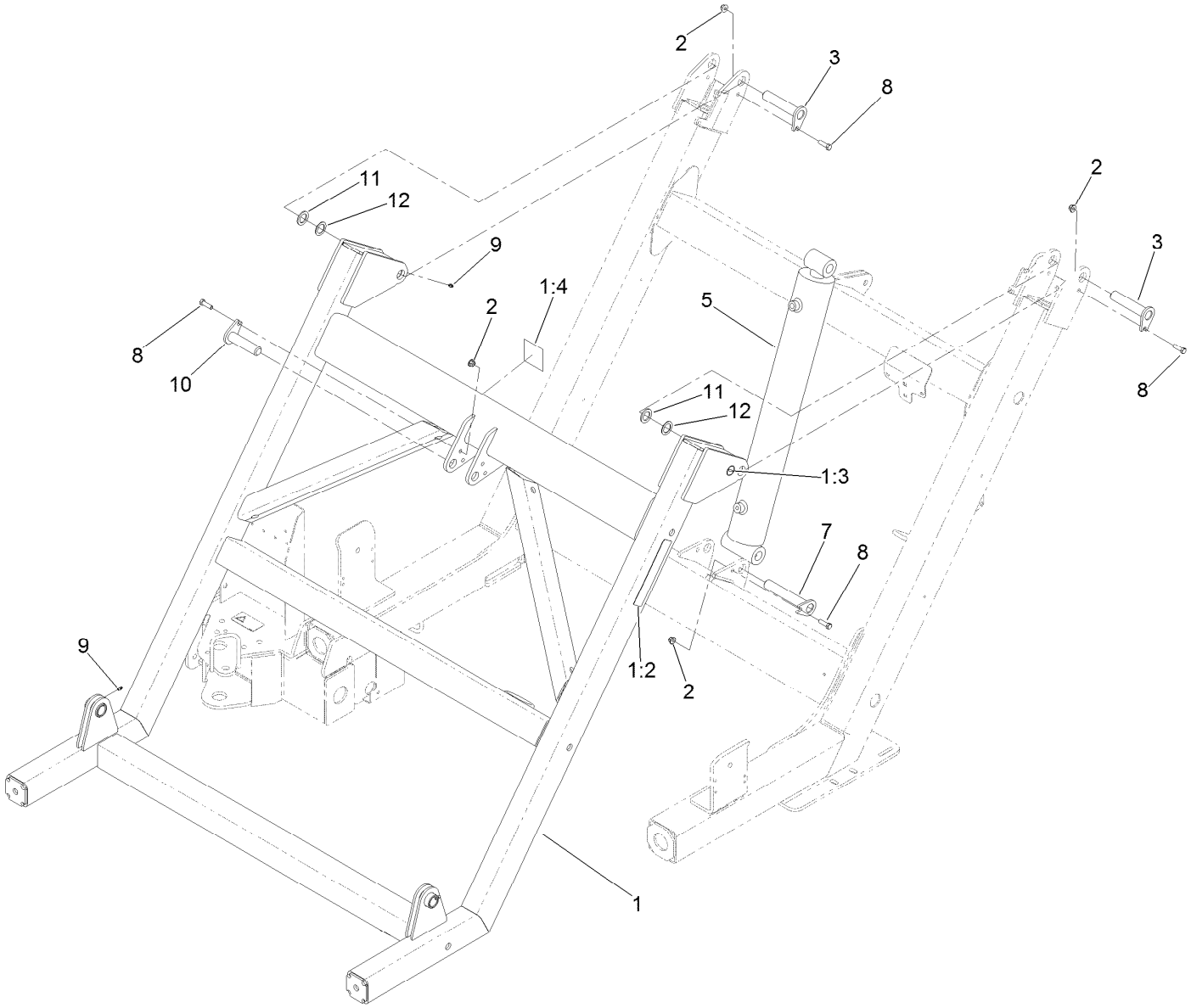

Pitch Frame and Cylinder Assembly

Ref.	*Part Number*	*Qty.*	*Description*
1	108-0778	1	Frame-Pitch
1:2	108-0863	2	Decal-Caution, Bystanders (CE)
1:3	58-6520	2	Decal-Grease
1:4	93-9899	1	Decal-Warning
2	104-8301	4	Nut-HF, NI
3	107-1258	2	Pin-Flag
5	138-5901	1	Cylinder-HYD
7	108-0669	1	Pin-Flag
8	323-7	4	Screw-HH
9	302-5	4	Fitting-Grease
10	108-0826	1	Pin-Flag
11	92-7845	2	Spacer-Hardened
12	10-8110	4	Washer-Thrust

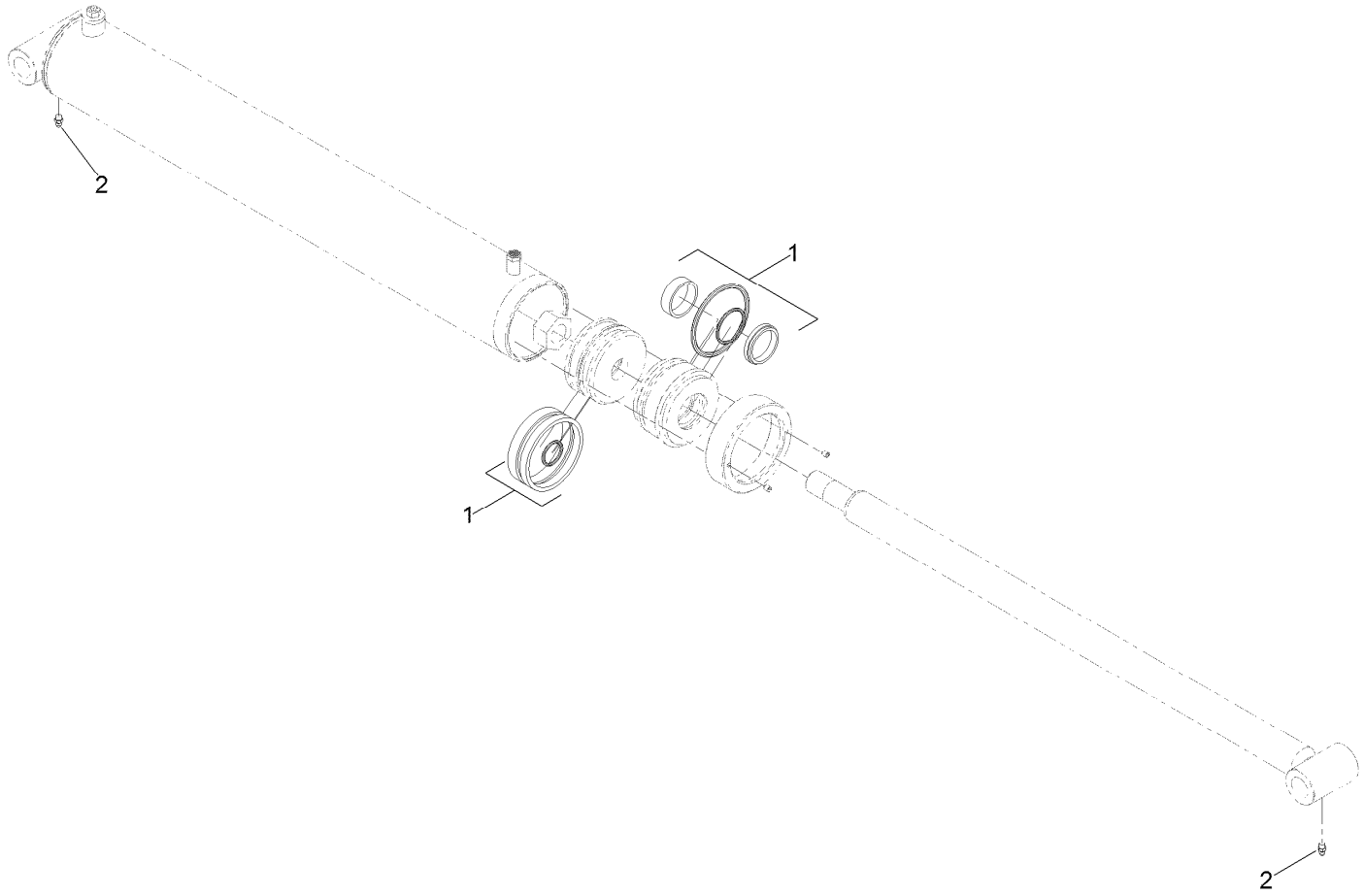

Hydraulic Cylinder Assembly No. 138-5901

Ref.	*Part Number*	*Qty.*	*Description*
1	137-6611	1	Seal Kit
2	302-58	2	Fitting-Straight

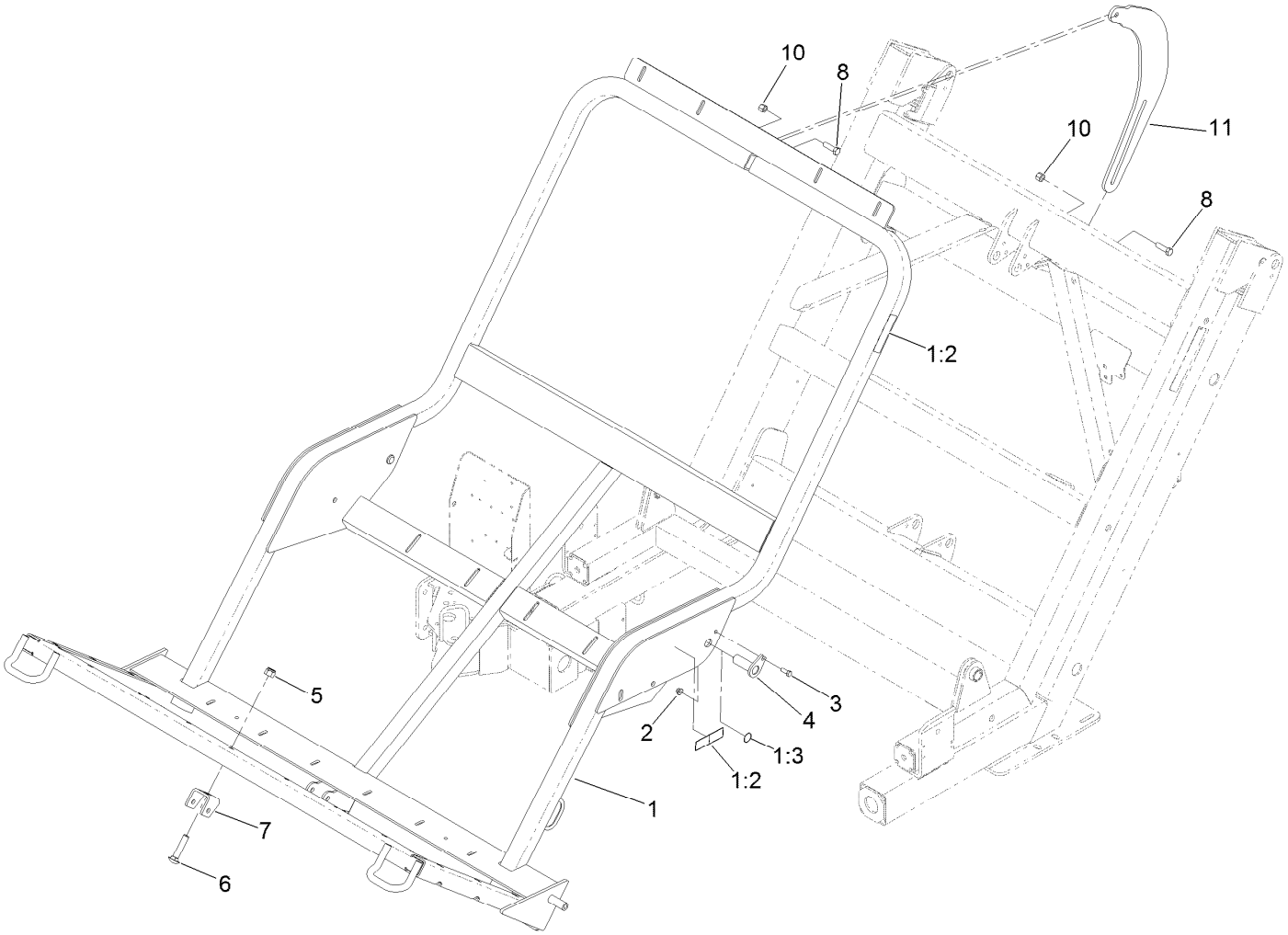

Saddle Frame Assembly

Ref.	*Part Number*	*Qty.*	*Description*
1	117-8320	1	Saddle ASM
1:2	108-0872	4	Decal-Warning
1:3	58-6520	2	Decal-Grease
2	104-8301	2	Nut-HF, NI
3	323-6	2	Screw-HH
4	108-0657	2	Pin-Flag
5	3296-53	1	Nut-Lock, NI
6	3233-32	1	Bolt-Carriage
7	117-8305-03	1	Saddle-Pivot
8	325-7	2	Screw-HH
10	3296-23	2	Nut-Lock, NI
11	108-0759-01	1	Link

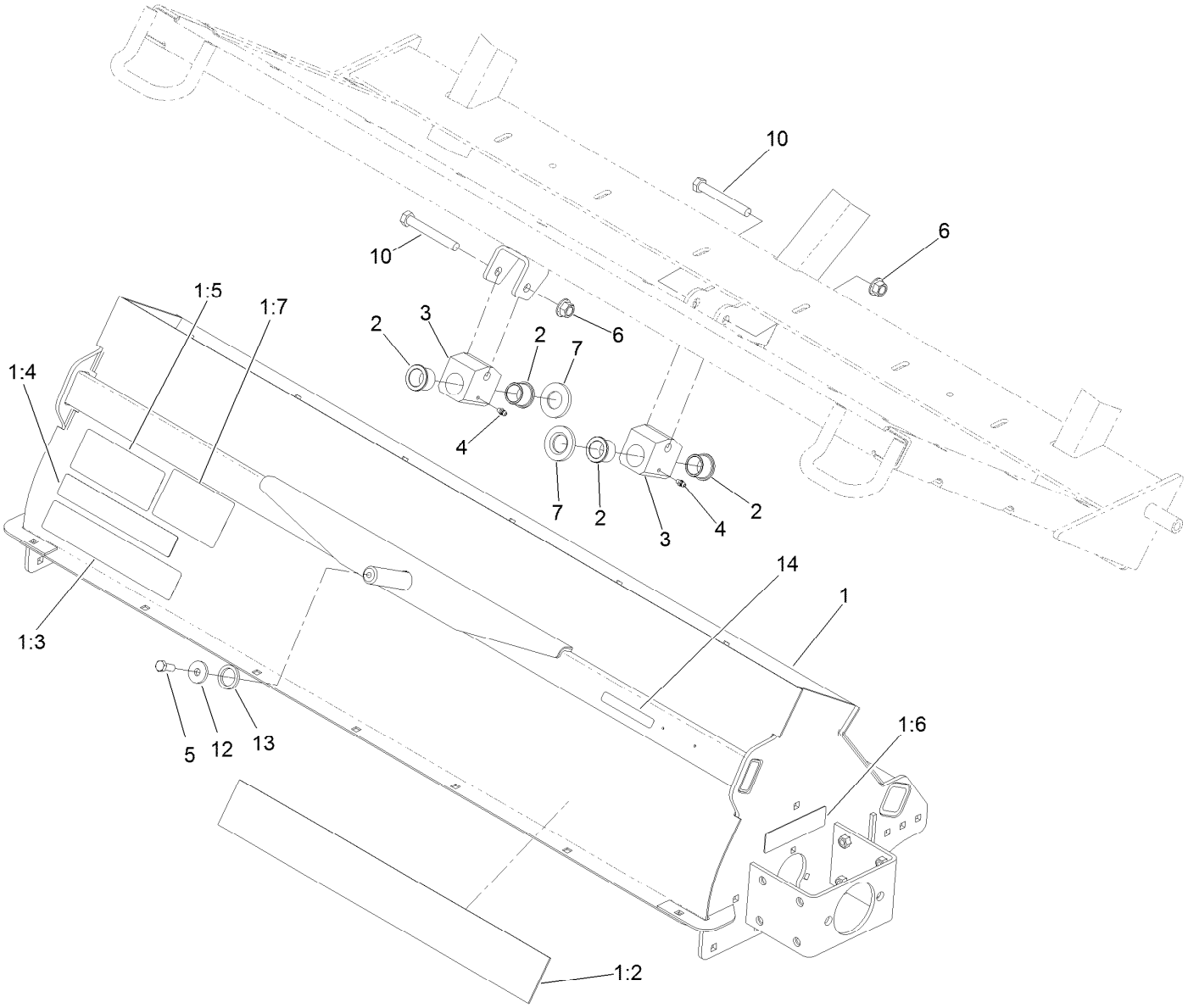

Brush Housing Assembly

Ref.	Part Number	Qty.	Description
1	117-8309	1	Brush Housing ASM
1:2	117-8365	1	Decal
1:3	108-0868	1	Decal-Pinchpoint
1:4	108-0862	1	Decal-Warning, Shields
1:5	108-0873	1	Decal-Danger
1:6	108-0870	1	Decal-Warning, Shields
1:7	110-7999	1	Decal-Warning, Offset Lift
2	94-8949	4	Bushing-Flange
3	117-8307	2	Mount-Pivot

Ref.	Part Number	Qty.	Description
4	302-5	2	Fitting-Grease
5	323-6	1	Screw-HH
6	99-5107	2	Nut-Lock
7	117-8302	2	Washer
10	325-35	2	Screw-HH
12	53-6380	1	Washer-Flat
13	115-5666	1	Spacer-Hardened
14	133-8061	1	Decal-Warning

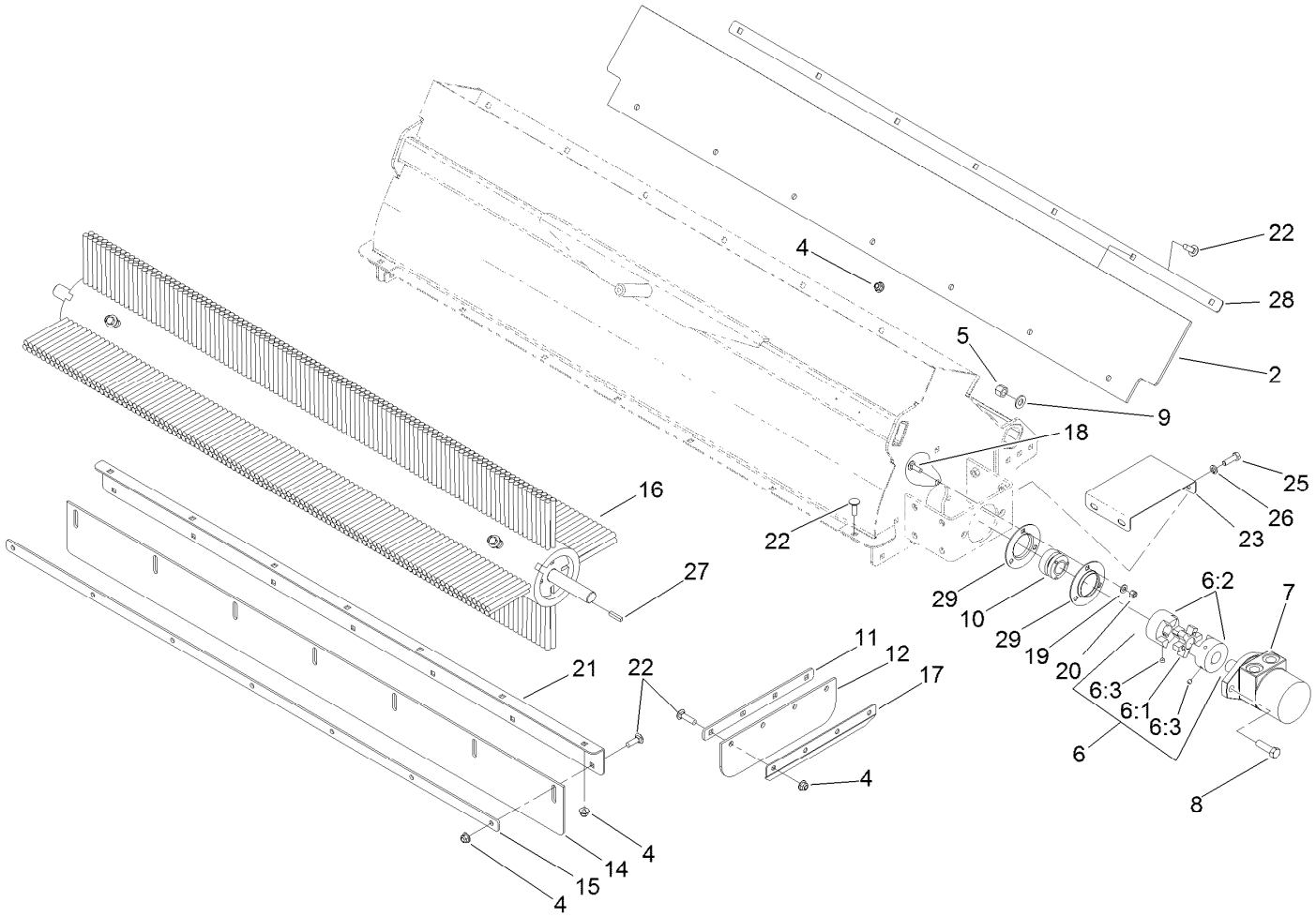

Brush, Motor and Shield Assembly

Ref.	Part Number	Qty.	Description
2	108-0686	1	Shield-Rubber, Top
4	104-8301	29	Nut-HF, NI
5	3296-23	2	Nut-Lock, NI
6	108-0760	1	Coupling-Jaw, Stock
6:1	108-0761	1	Spider-Coupling
6:2	108-0762	2	Coupling-Jaw
6:3	3246-2	4	Screw-Set, HSH
7	105-9455	1	Motor
8	325-7	2	Screw-HH
9	3256-26	2	Washer-Flat
10	115-8975	2	Bearing-Self-Aligning
10:1	110-2735	1	Indicator-Torque ●
10:2	110-2736	1	Wrench-Allen ●
11	108-0668-03	2	Plate-Skirt, Side
12	115-9093	2	Shield, Rubber-Side

Ref.	Part Number	Qty.	Description
14	115-9092	1	Shield, Rubber-Front
15	108-0667-03	1	Plate-Skirt, Front
16	117-8310	1	Brush ASM
17	107-1439-03	2	Plate-Angle
18	3230-2	6	Bolt-CARR
19	3256-23	6	Washer-Plain
20	3296-29	6	Nut-Lock, NI
21	107-1280-01	1	Angle-Front
22	3231-25	29	Bolt-CARR
23	108-0781	2	Cover-Coupler
25	323-6	8	Screw-HH
26	3253-21	8	Washer-Lock
27	13-2840	1	Key-Square
28	108-0844-03	1	Plate-Shield, Top
29	107-1474	4	Flange-3 Bolt

● Not illustrated

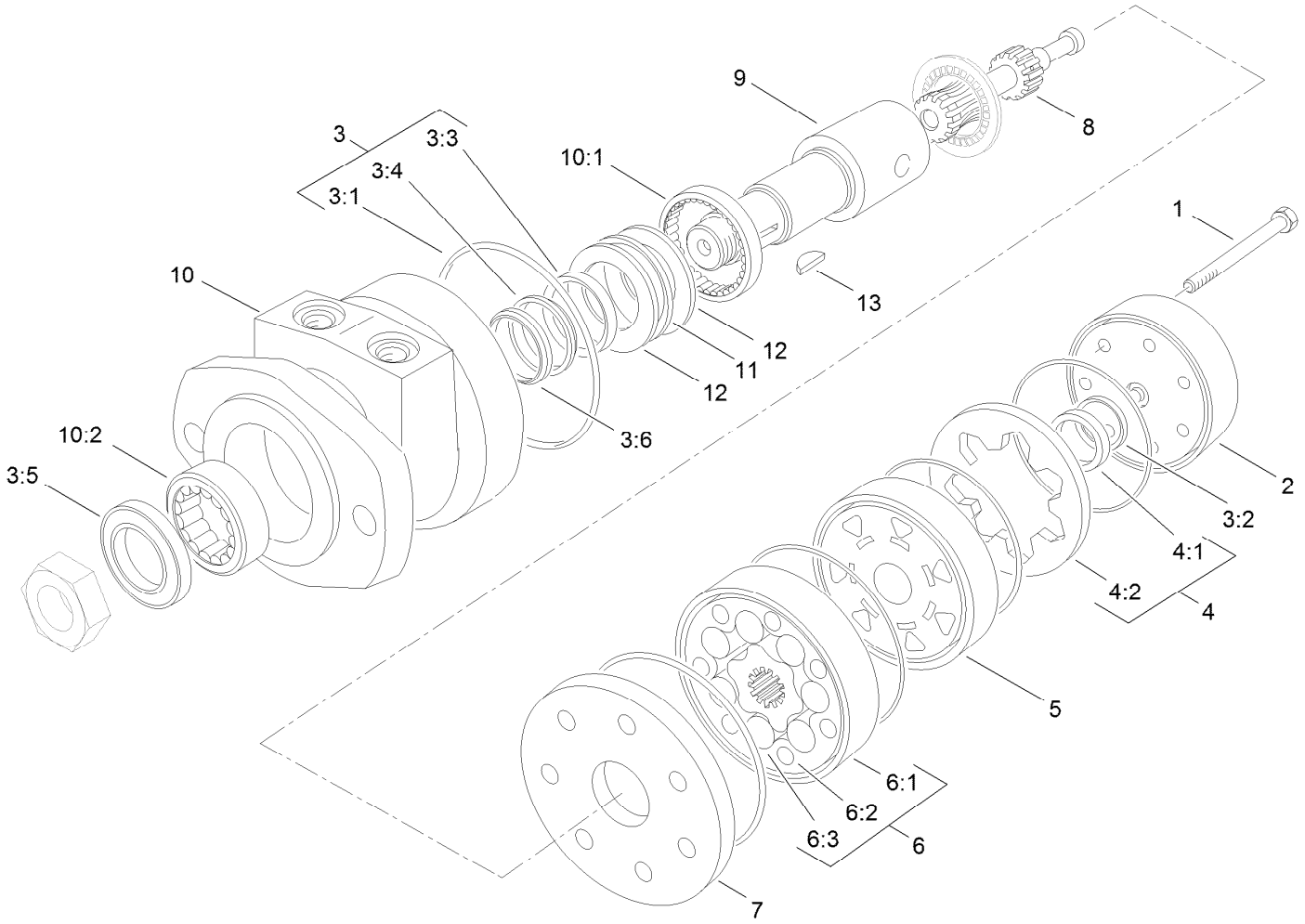

Hydraulic Motor Assembly No. 105-9455

Ref.	Part Number	Qty.	Description
1	322-33	5	Screw-HH
2	106-1981	1	Cover-End
3	106-1989	1	Seal Kit
3:1		6	Seal-Ring ■
3:2		1	Seal-Commutator ■
3:3		1	Seal-Dirt And Water ■
3:4		1	Washer-Backup ■
3:5		1	Seal-Shaft ■
3:6		1	Ring-Back Up ● ■
4	106-1982	1	Commutator ASM
4:1		1	Commutator ■
4:2		1	Ring-Commutator ■
5	106-1983	1	Manifold

Ref.	Part Number	Qty.	Description
6	106-1984	1	Rotor Set
6:1		1	Stator ■
6:2		7	Vane ■
6:3		1	Rotor ■
7	106-1985	1	Plate-Wear
8	106-1986	1	Link-Drive
9	106-1987	1	Shaft-Coupling
10	106-1988	1	Housing ASM
10:1		1	Bearing ■
10:2		1	Bearing ■
11		1	Bearing-Thrust ■
12		1	Washer-Thrust ■
13	106-1990	1	Key-Woodruff

● Not illustrated

■ Not serviced separately

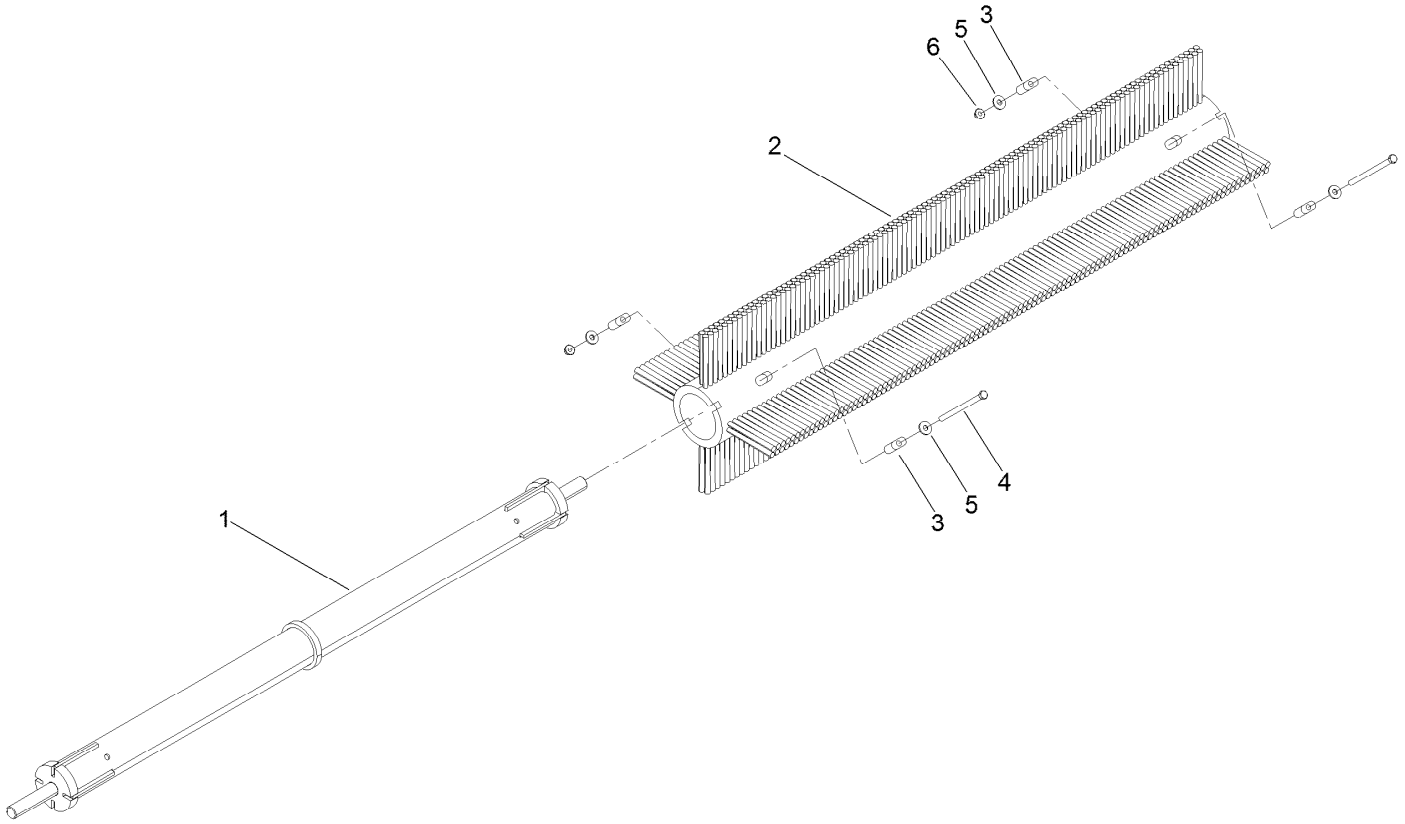

Brush Assembly No. 117-8310

Ref.	*Part Number*	*Qty.*	*Description*
1	115-8930	1	Axle-Brush
2	115-8982	1	Brush-Paddle
3	115-8962	4	Key
4	323-58	2	Bolt-TAP, HH
5	80-6990	4	Washer-Hardened
6	104-8301	2	Nut-HF, NI

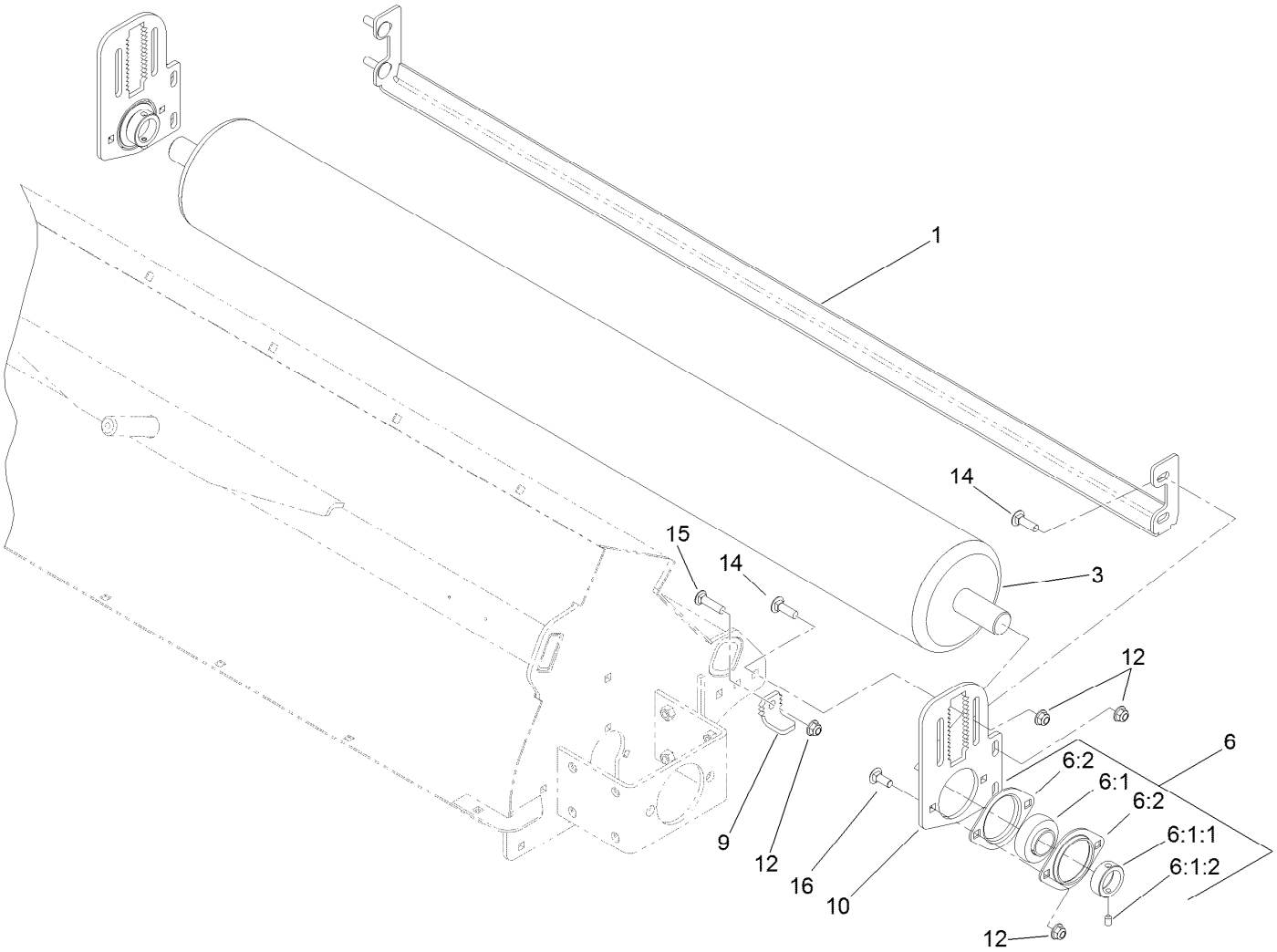

Roller Assembly

Ref.	Part Number	Qty.	Description
1	107-1477-01	1	Angle-Scraper
3	107-1294-03	1	Roller ASM
6	107-1358	2	Bearing-Flange
6:1	107-1357	1	Bearing
6:1:1	251-246	1	Collar W/Set Screws
6:1:2	3246-17	1	Setscrew-HSH
6:2	107-1356	2	Flange-2 Bolt
9	107-1438	2	Key-Adjuster, Bent
10	107-1437-01	2	Plate-Adjuster
12	104-8301	14	Nut-HF, NI
14	3231-25	8	Bolt-CARR
15	3231-4	2	Screw-CARR
16	3231-2	4	Bolt-CARR

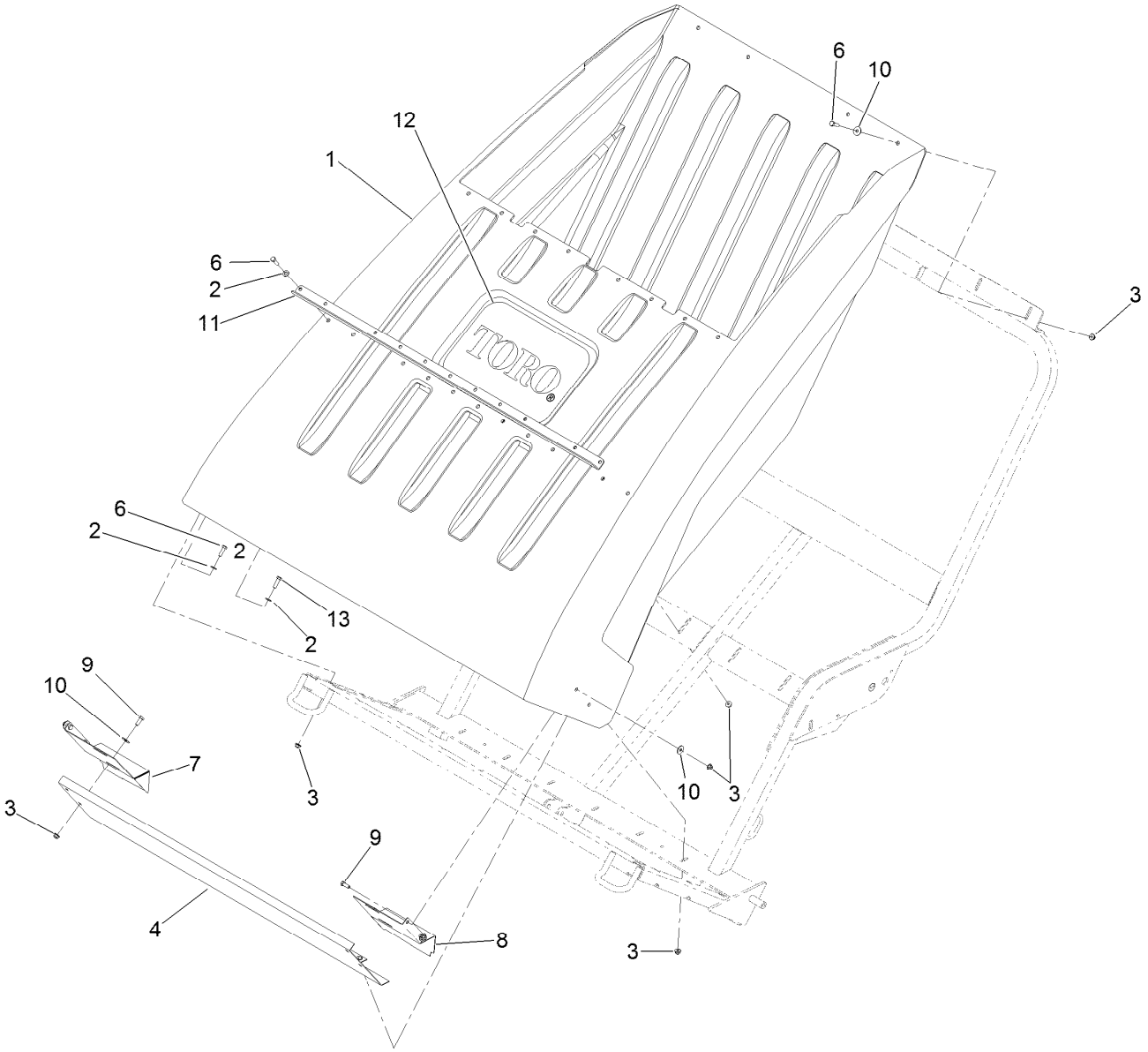

Hopper and Baffle Assembly

Ref.	Part Number	Qty.	Description
1	107-1272	1	Hopper-Dump
2	3256-24	24	Washer-Flat
3	104-8301	45	Nut-HF, NI
4	107-1225-03	1	Baffle-Hopper
6	323-7	30	Screw-HH
7	107-1462-03	1	Plate-Side, Baffle LH
8	107-1442-03	1	Plate-Side, Baffle RH
9	323-6	8	Screw-HH
10	3256-35	24	Washer-Flat
11	115-9063-03	1	Support-Hopper
12	107-1454	1	Decal
13	323-8	2	Screw-HH

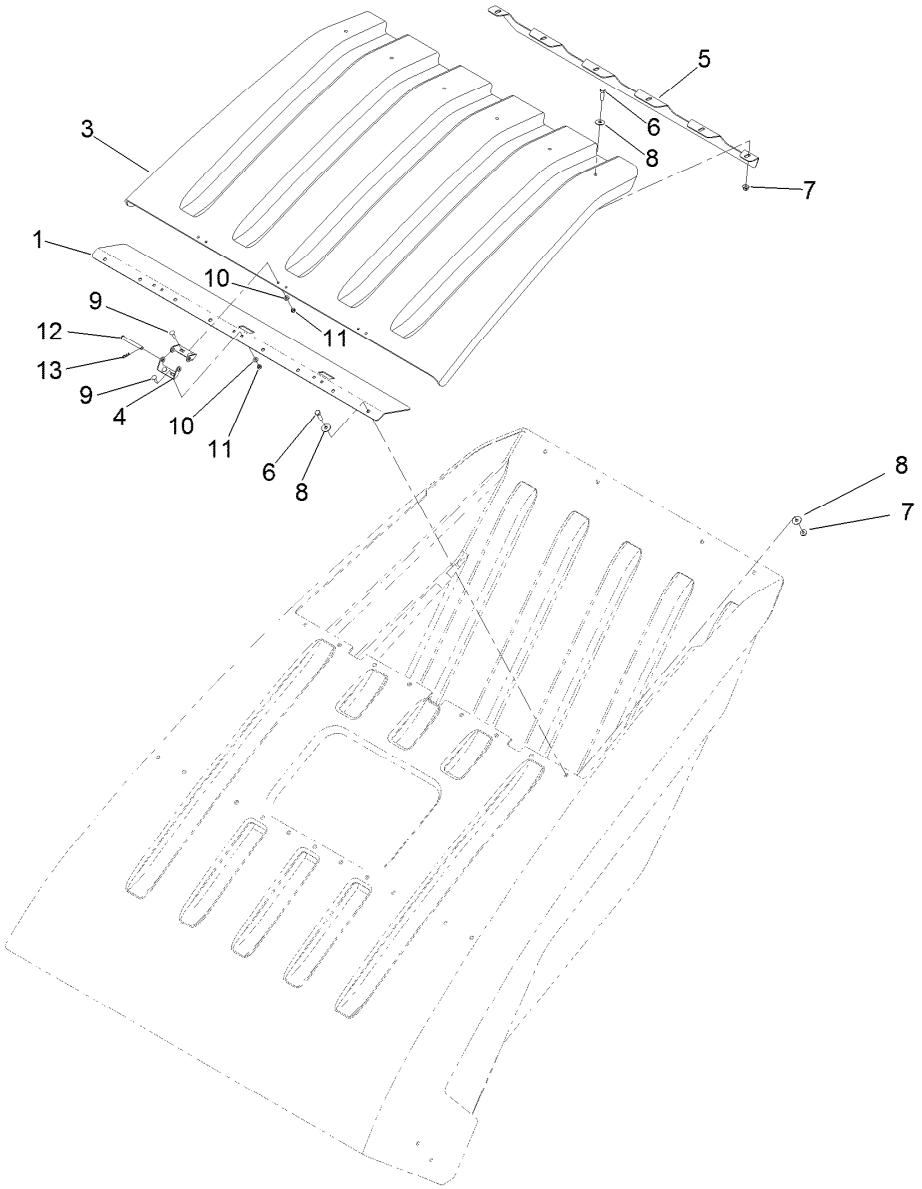

Hopper Lid and Baffle Assembly

Ref.	*Part Number*	*Qty.*	*Description*
1	108-0678-03	1	Plate-Baffle, Hopper
3	107-1273	1	Lid-Hopper
4	107-1549	6	Hinge-Half
5	107-1487-03	1	Door-Baffle
6	323-7	14	Screw-HH
7	104-8301	14	Nut-HF, NI
8	3256-35	22	Washer-Flat
9	3229-2	12	Screw-CARR
10	3256-22	12	Washer-Flat
11	3296-42	12	Nut-Lock, NI
12	80-2570	3	Pin-Clevis
13	3290-307	3	Pin-Cotter

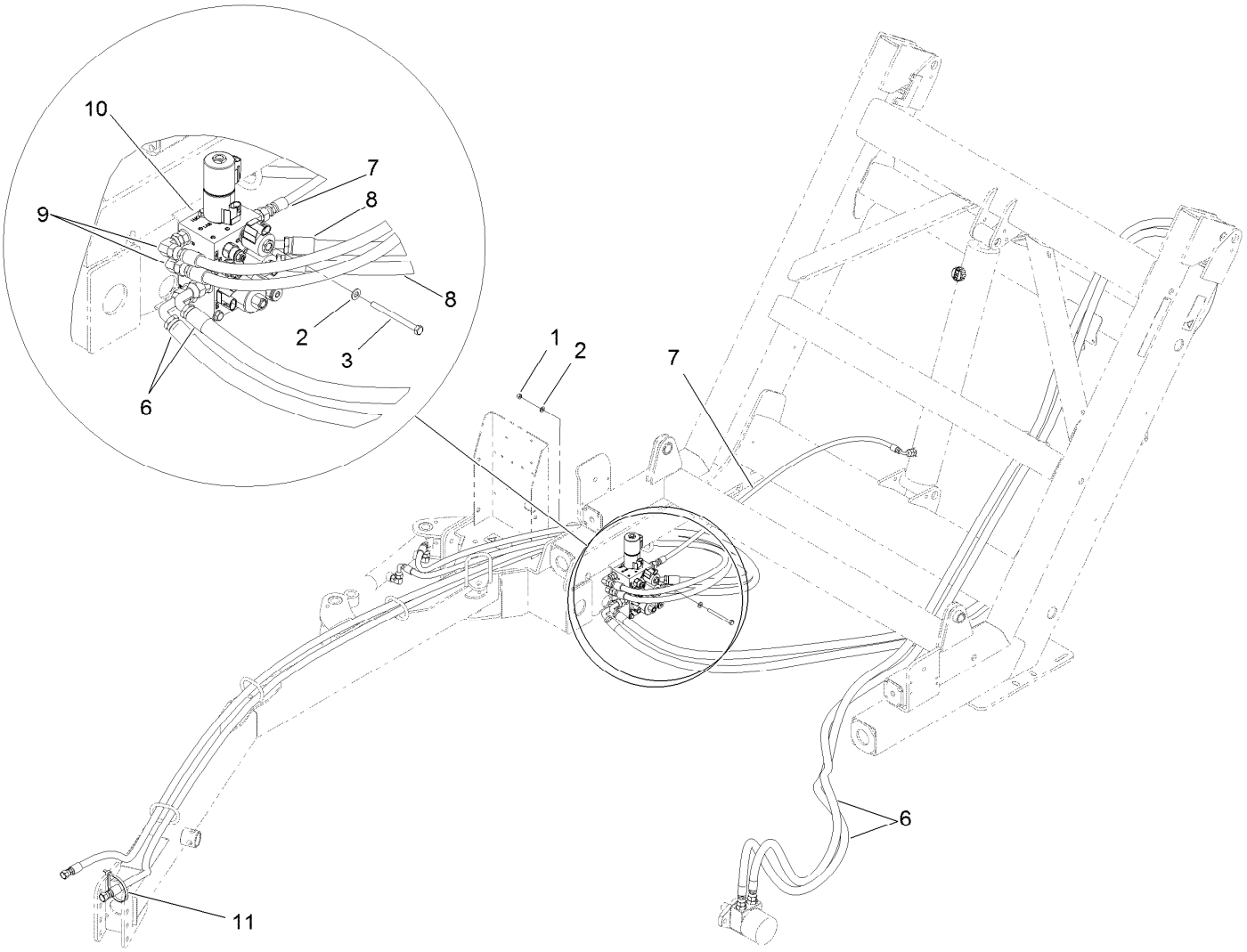

Hydraulic Manifold Valve and Hose Routing Assembly

Ref.	*Part Number*	*Qty.*	*Description*
1	3296-29	2	Nut-Lock, NI
2	3256-23	4	Washer-Plain
3	322-23	2	Screw-HH
6	107-1394	2	HYD Hose ASM
7	107-1396	1	HYD Hose ASM
8	107-1395	2	HYD Hose ASM
9	114-7702	2	Hose-HYD
10	117-8366	1	Hydraulic Manifold ASM
11	3334-945	1	Tie-Cable

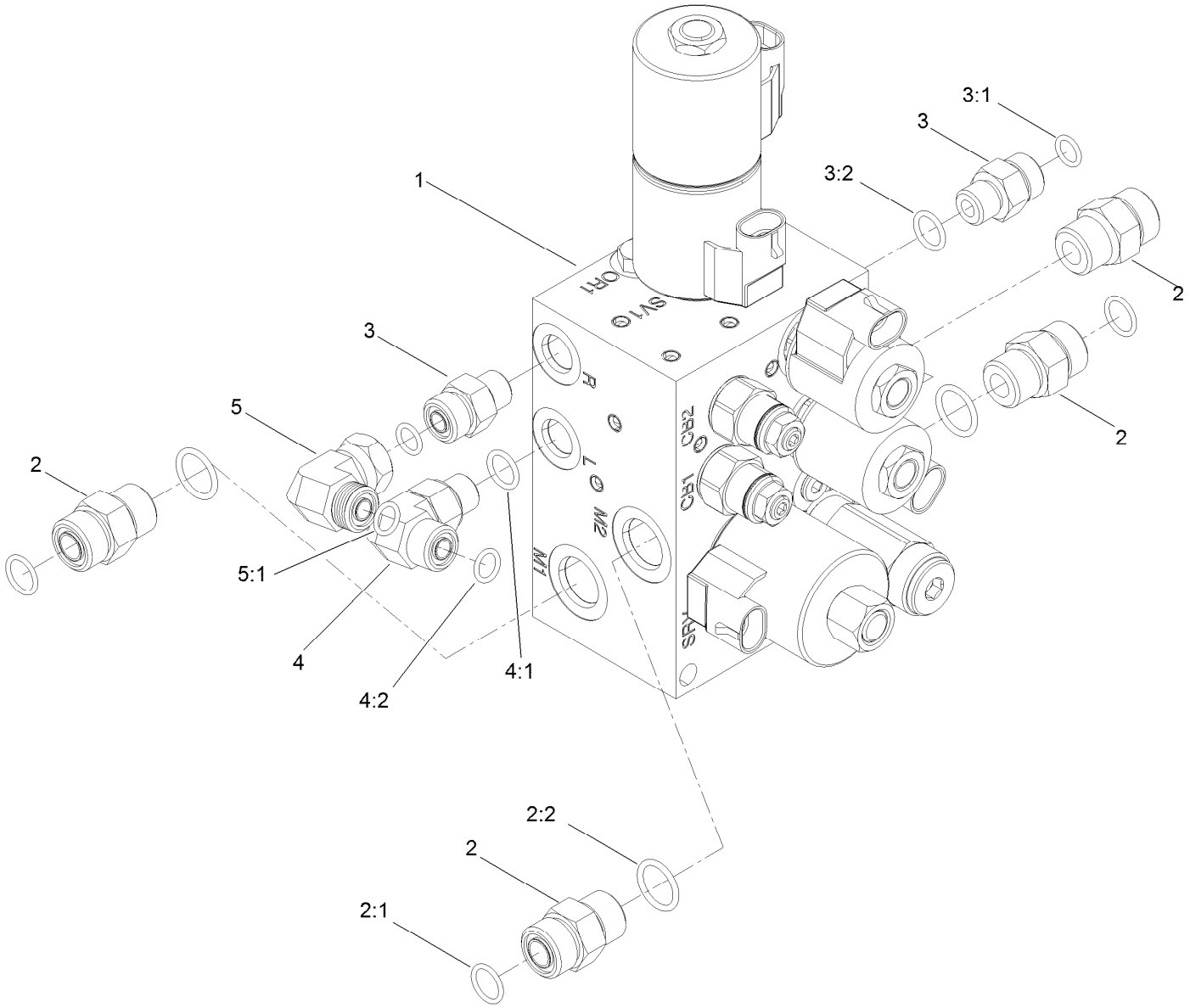

Hydraulic Manifold Assembly No. 117-8366

Ref.	*Part Number*	*Qty.*	*Description*
1	112-6752	1	Manifold-Hydraulic
2	340-4	4	Fitting-Straight
2:1	237-30	1	O-Ring
2:2	237-79	1	O-Ring
3	340-2	2	Fitting-Straight
3:1	237-22	1	O-Ring
3:2	237-42	1	O-Ring
4	340-77	1	Fitting-Elbow, 90 DEG
4:1	237-22	1	O-Ring
4:2	237-42	1	O-Ring
5	340-159	1	Elbow-90
5:1	237-22	2	O-Ring

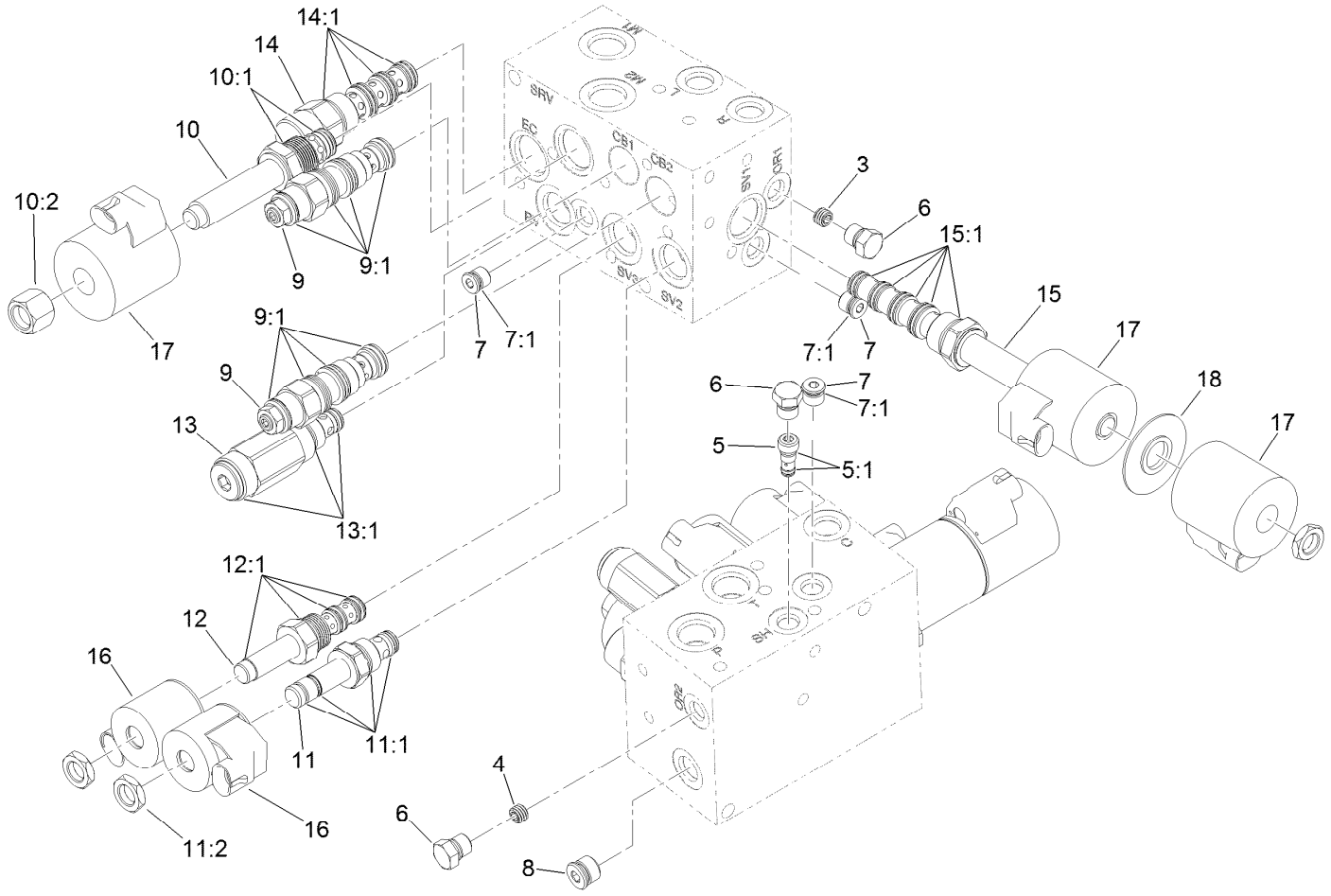

Hydraulic Manifold Assembly No. 112-6752

Ref.	Part Number	Qty.	Description
3	110-0495	1	Plug-Orifice (0.050 Inch)
4	112-9202	1	Orifice-Flow, Control (.060)
5	117-8313	1	Shuttle-Load
5:1	117-7597	1	Seal Kit
6	117-0115	1	Plug
7	353-990	1	Plug ASM
7:1	237-78	1	O-Ring
8	106-1026	1	Plug-HYD
9	114-5082	2	Valve-Balance, Counter
9:1	114-5083	1	Seal Kit
10	110-8768	1	Valve-Relief, Solenoid (3000 PSI)
10:1	110-6316	1	Seal Kit
10:2	130-8181	1	Nut-Coil (1/2-20 Unf-2B)

Ref.	Part Number	Qty.	Description
11	107-7516	1	Solenoid Valve ASM
11:1	105-9156	1	Seal Kit
11:2	110-2634	1	Nut-Coil
12	106-1995	1	Valve-3 Way
12:1	110-8773	1	Seal Kit
13	117-8312	1	Valve-Relief
13:1	105-9156	1	Seal Kit
14	117-8314	1	Compensator-Pressure
14:1	110-8908	1	Spool Valve Seal Kit
15	117-8311	1	Valve-Solenoid
15:1	117-7596	1	Seal Kit
16	105-9333	2	Coil-12Vdc
17	110-2630	3	Coil-12Vdc
18	117-8316	1	Spacer-E Coil

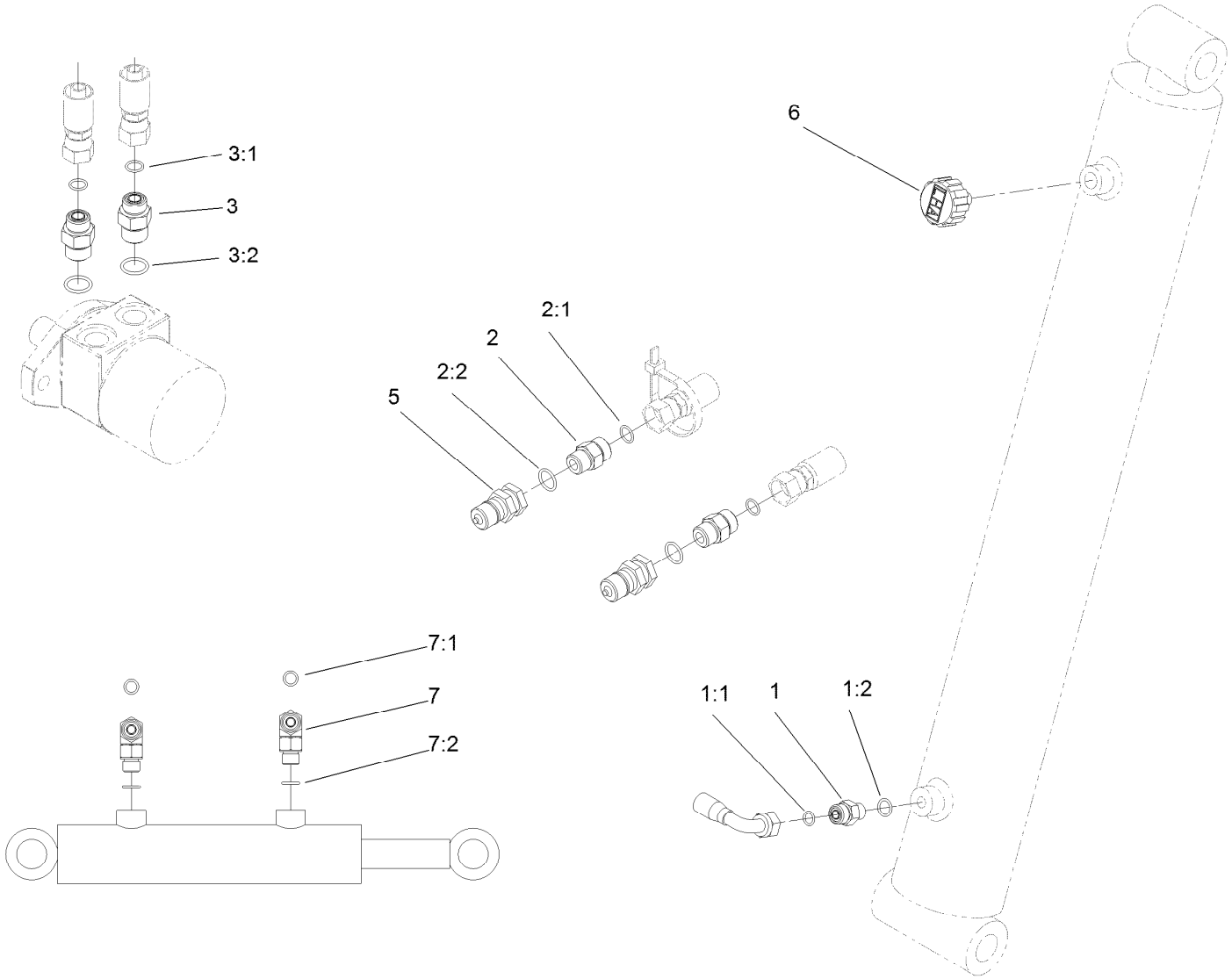

Hydraulic Fitting Assembly

Ref.	*Part Number*	*Qty.*	*Description*
1	107-1463	1	Fitting-Valve, Check
1:1	237-22	1	O-Ring
1:2	237-42	1	O-Ring
2	340-4	2	Fitting-Straight
2:1	237-30	1	O-Ring
2:2	237-79	1	O-Ring
3	340-6	2	Fitting-Straight
3:1	237-30	1	O-Ring
3:2	237-80	1	O-Ring
5	105-4170	2	Coupler-Male
6	68-6150	1	Breather
7	340-77	2	Fitting-Elbow, 90 DEG
7:1	237-22	1	O-Ring
7:2	237-42	1	O-Ring

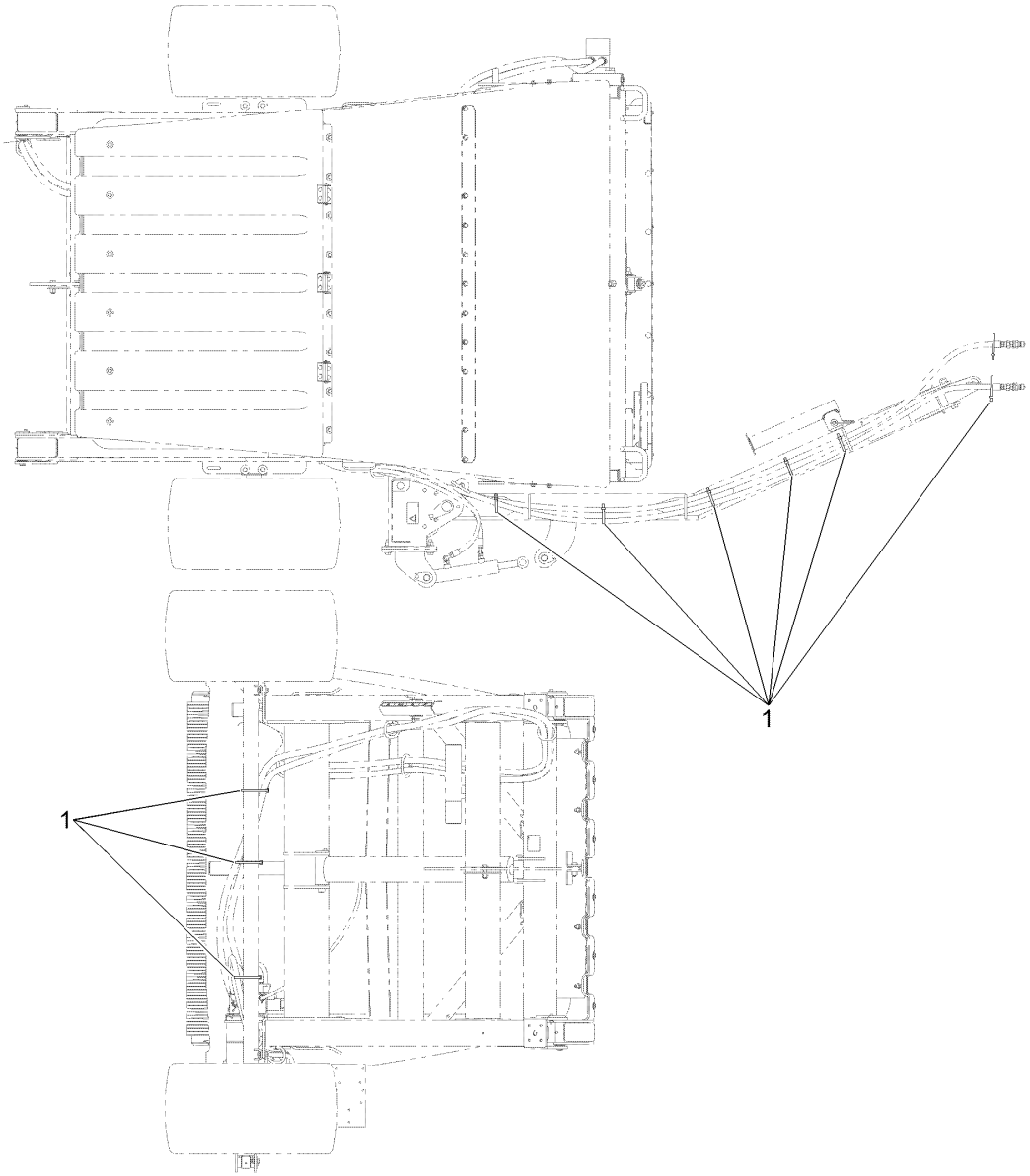

Cable Tie Assembly

Ref.	*Part Number*	*Qty.*	*Description*
1	3334-945	9	Tie-Cable

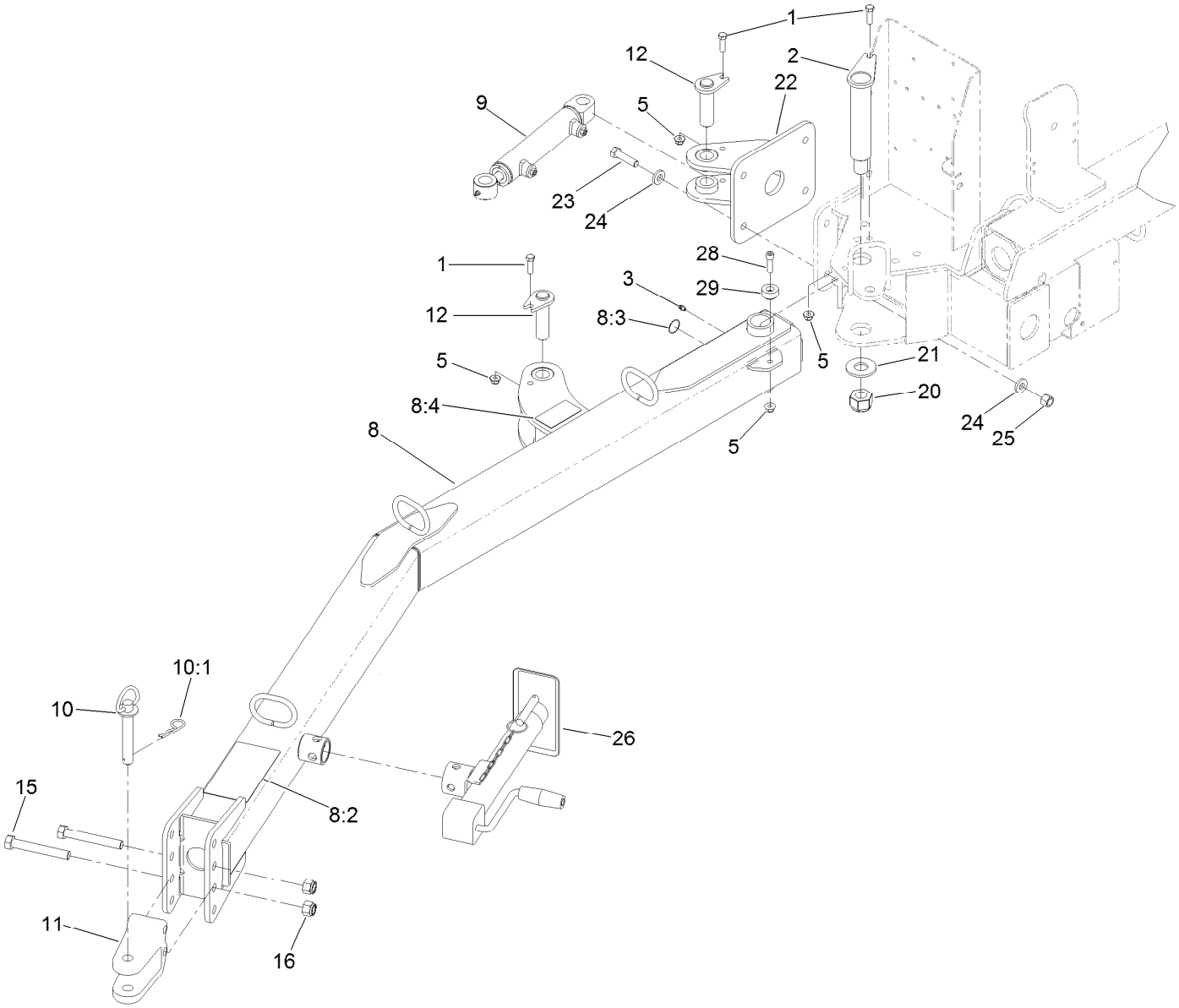

Tongue Assembly

Ref.	Part Number	Qty.	Description
1	323-7	3	Screw-HH
2	115-2927	1	Pin ASM
3	302-5	1	Fitting-Grease
5	104-8301	4	Nut-HF, NI
8	115-8991	1	Tongue-Hitch
8:2	108-0861	1	Decal-Danger, Sweeper
8:3	58-6520	1	Decal-Grease
8:4	108-0866	1	Decal-Pinchpoint
9	138-5902	1	Hydraulic Cylinder ASM
10	13-6200	1	Pin-Hitch, Pointed
10:1	3290-343	1	Pin-Hair
11	131-4381-01	1	Hitch-Clevis

Ref.	Part Number	Qty.	Description
12	115-8934	2	Pin ASM
15	327-23	2	Screw-HH
16	3296-53	2	Nut-Lock, NI
20	104-2024	1	Nut-Hex, NI
21	112-4953	1	Washer-Plain
22	115-9010-01	1	Bracket ASM
23	325-8	4	Screw-HH
24	107-3395	8	Washer-Hardened
25	3296-23	4	Nut-Lock, NI
26	T0000-3423	1	Jack-Sidewind
28	3274-1	1	Screw-HSH
29	117-8533	1	Plate-Sensing

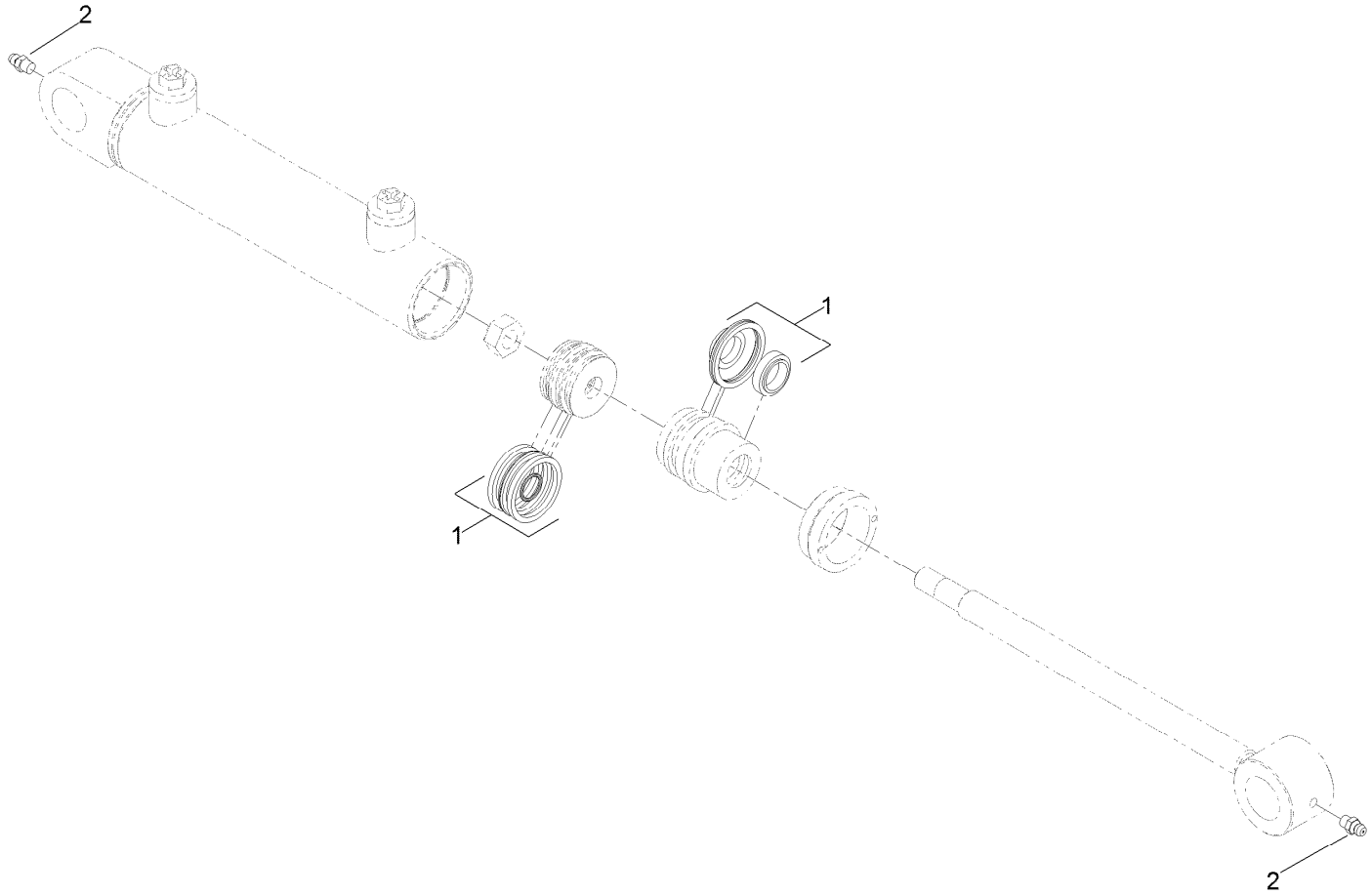

Hydraulic Cylinder Assembly No. 138-5902

Ref.	*Part Number*	*Qty.*	*Description*
1	127-8587	1	Seal Kit
2	302-58	2	Fitting-Straight

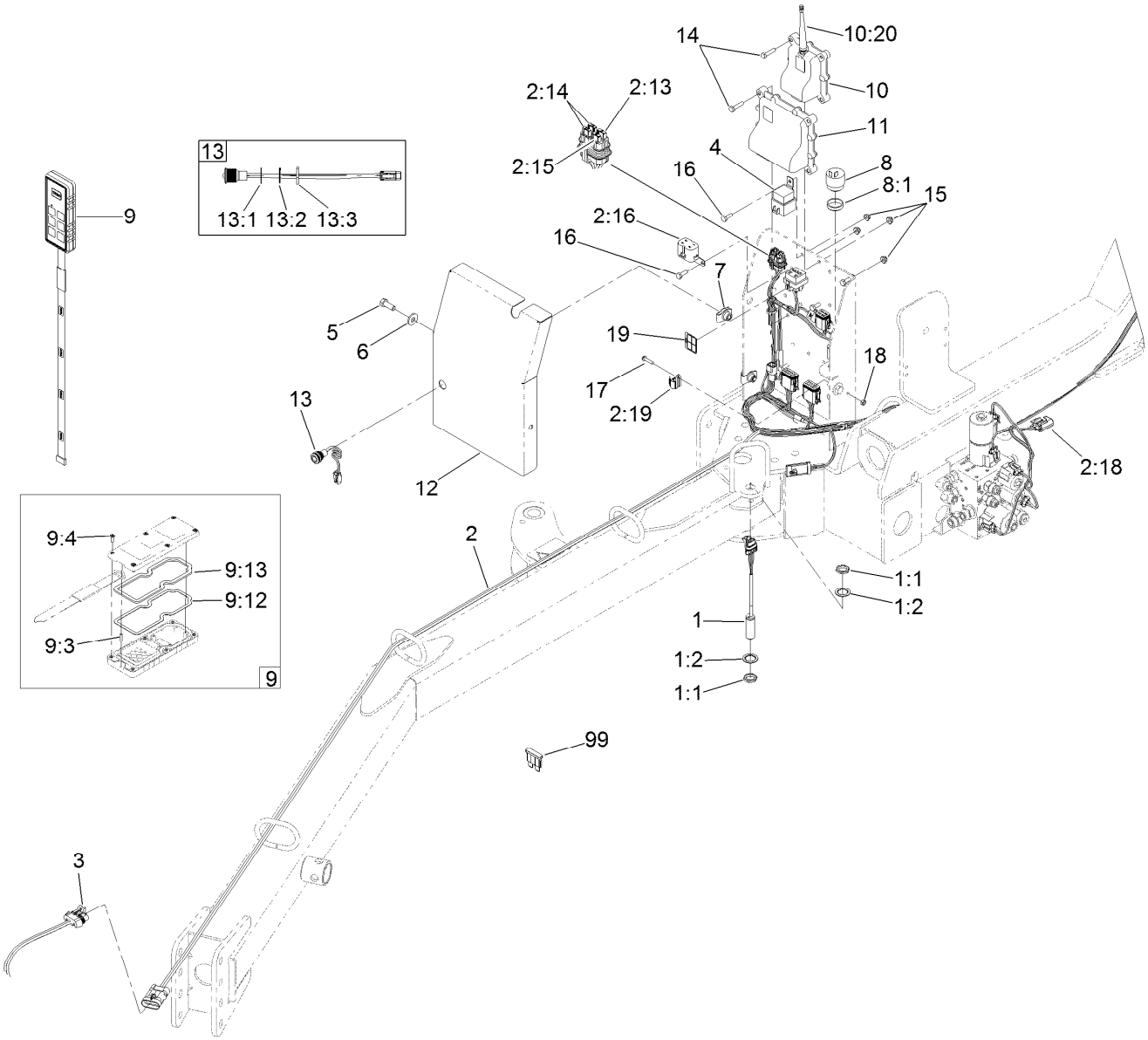

Electrical Assembly

Ref.	Part Number	Qty.	Description
1	115-5300	1	Proximity Switch ASM
1:1	117-3207	2	Nut-Hex
1:2	117-3208	2	Washer-Lock, Internal Tooth
2	122-1503	1	Harness-Wire
2:13	121-8861	1	Fuse-Mini Blade, 2 Amp
2:14	121-8865	2	Fuse-Mini Blade, 7.5 Amp
2:15	121-8867	1	Fuse-Mini Blade, 15 Amp
2:16	32180-179	1	Cover-Bussman
2:18	32180-101	1	Cover-Fuse, Single
2:19	32180-089	1	Cap-Plug, 3 Way
3	115-8141	1	Harness-Wire
4	99-7430	1	Relay-Mini
5	323-6	3	Screw-HH
6	80-6990	3	Washer-Hardened
7	105-4886	3	Nut-Tinnerman
8	80-9330	1	Audio Alarm ASM
8:1	104-5107	1	Nut-Plastic, Knurled
9	125-1300	1	Remote ASM
9:3	121-2906	1	Pin-Lanyard

Ref.	Part Number	Qty.	Description
9:4	121-2908	6	Screw-PPH
9:12	125-1294	1	Backer-Gasket
9:13	125-1295	1	Gasket (HH-Small)
10	132-9600	1	Controller
10:20	140-6605	1	Antenna Service Kit
11	125-1360	1	Controller
12	131-9359-01	1	Cover
13	122-0630	1	Red LED Indicator Lamp ASM
13:1	122-0634	1	Gasket-LED
13:2	122-0633	1	Washer-Locking
13:3	122-0632	1	Nut-Fixing
14	321-7	8	Screw-HH
15	104-7201	11	Nut-HF
16	321-4	3	Screw-HH
17	106-9169	1	Screw-HWH
18	3296-2	1	Nut-Lock, NI
19	131-6766	1	Decal-Fuses
99	109101	1	Fuse-Blade, 20 Amp

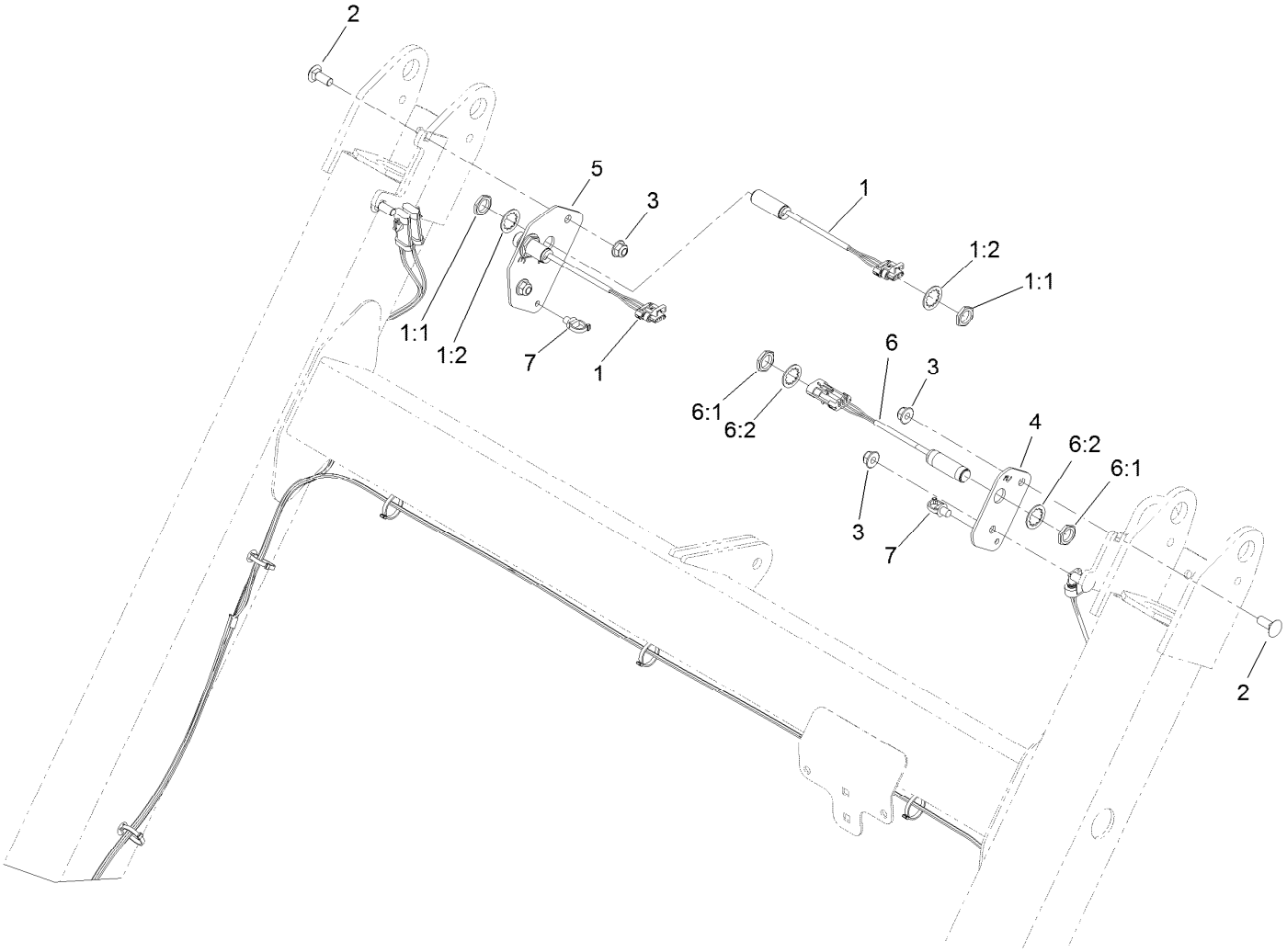

Proximity Sensor System Assembly

Ref.	*Part Number*	*Qty.*	*Description*
1	115-5300	2	Proximity Switch ASM
1:1	117-3207	2	Nut-Hex
1:2	117-3208	2	Washer-Lock, Internal Tooth
2	3231-2	4	Bolt-CARR
3	104-8301	4	Nut-HF, NI
4	131-9352-01	1	Plate-Switch, LH
5	131-9351-01	1	Plate-Switch, RH
6	115-0282	1	Proximity Sensor ASM
6:1	117-3207	2	Nut-Hex
6:2	117-3208	2	Washer-Lock, Internal Tooth
7	32180-030	2	Clip-Tie

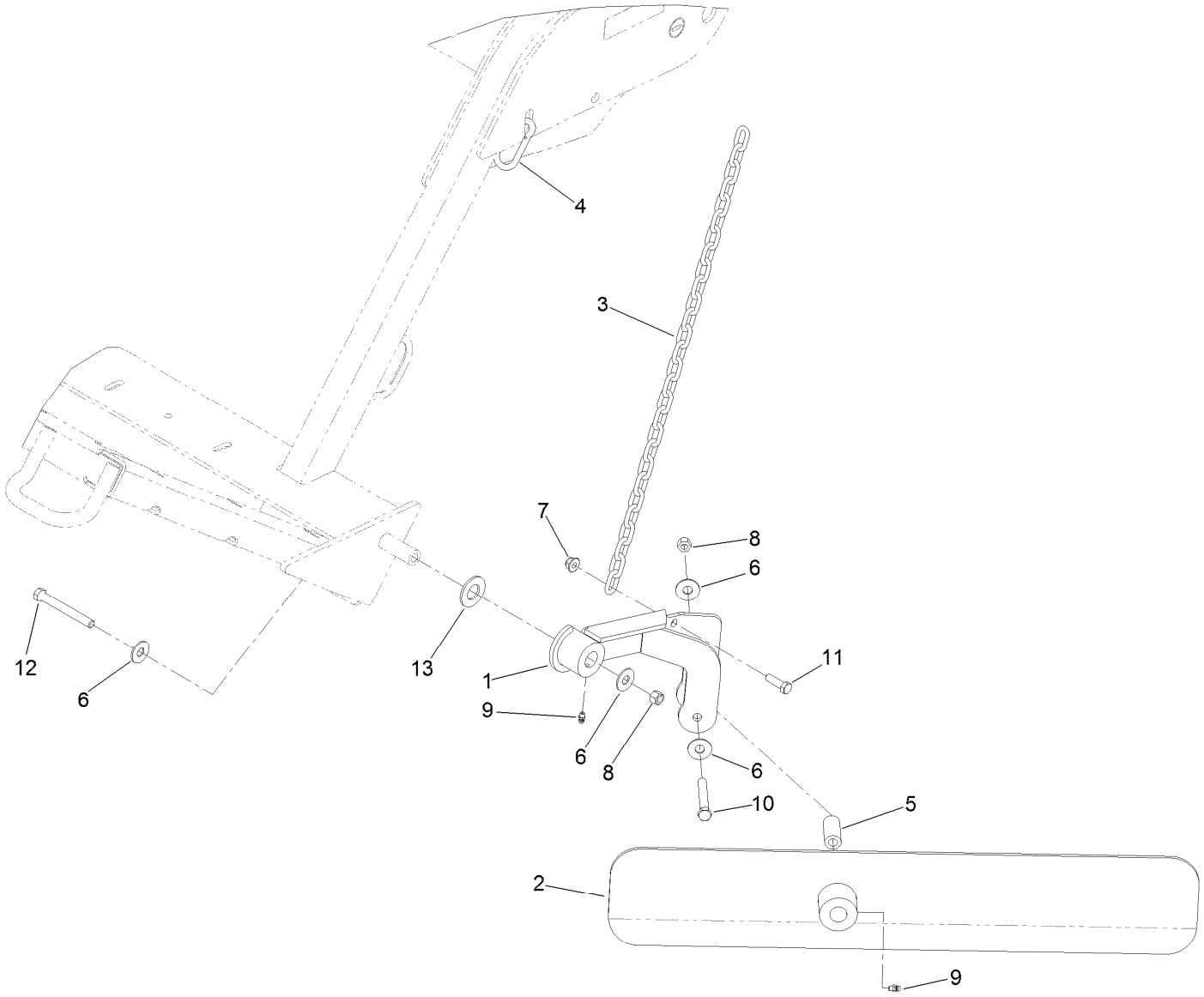

Windrow Assembly

Ref.	Part Number	Qty.	Description
1	107-1506-01	1	Arm ASM
2	108-0836-01	1	Windrow Blade ASM
3	SV139-00	1	Chain-Link
4	107-1507	1	Link-Snap
5	104-0958	1	Spacer-Windrow
6	3256-5	4	Washer-Flat
7	104-8301	1	Nut-HF, NI
8	3296-48	2	Nut-Hex
9	302-5	2	Fitting-Grease
10	324-13	1	Screw-HH
11	323-7	1	Screw-HH
12	324-26	1	Screw-HH
13	104-8076	1	Washer

Attachments and Accessories

For 07068 Pro Sweep Turf Sweeper

Product Name	Model/Part
Brake Kit	07086
Wheel Scraper Kit	107-1370
Slow-Moving Vehicle Sign Kit	107-1372
Wire Harness	115-8141
Sidewind Jack	T0000-3423

Notes:

TORO®

Count on it.