FORM NO. 3310-239 Rev.

TORO

MODEL 57003—200001 thru 300001 & UP (Recoil)
MODEL 57017—200001 thru 300001 & UP (Electric)
MODEL 57025—200001 thru 300001 & UP (Cutting Unit)

# PARTS CATALOG

# 5 H.P. LAWN TRACTOR (Recoil and Electric)

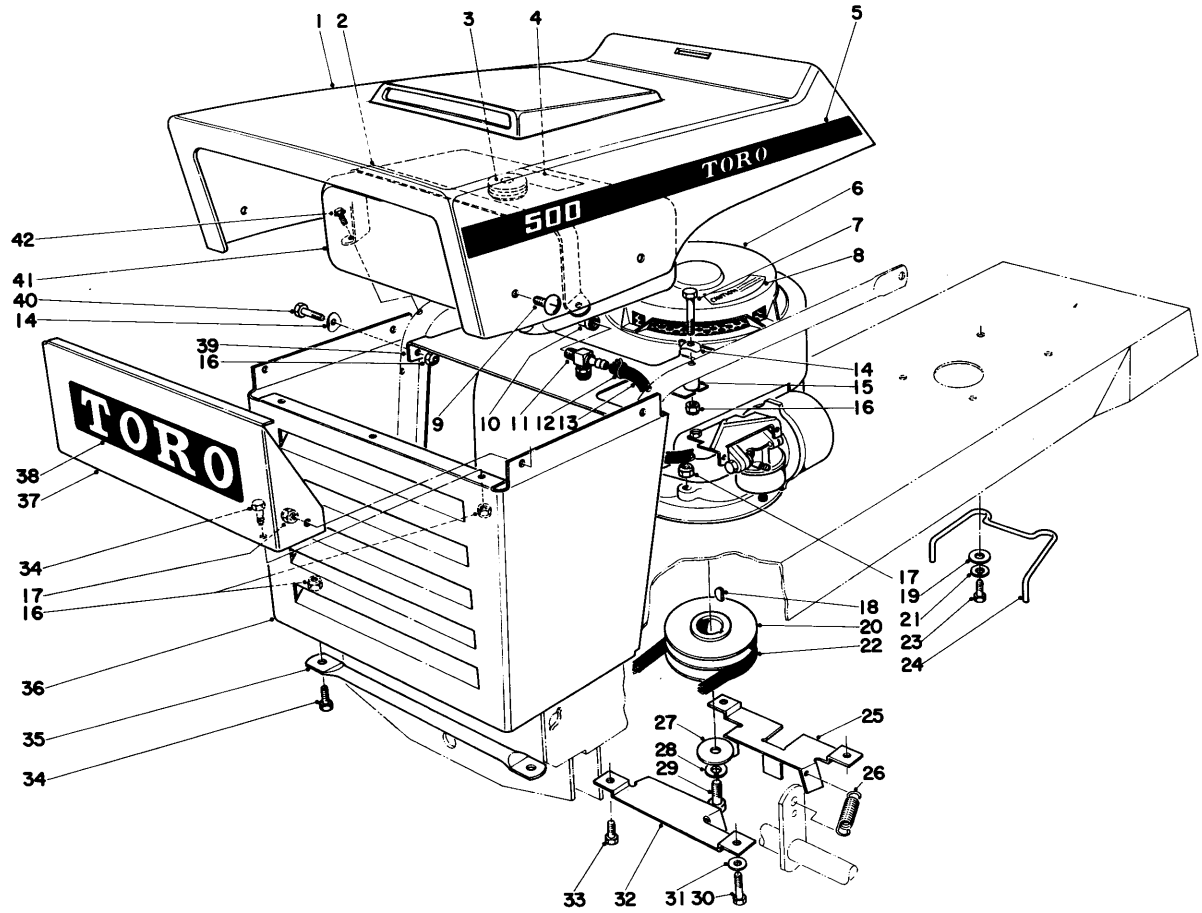


## HOOD AND ENGINE ASSEMBLY

| Ref. No. | Part No. | Description | No. Used |
|---|---|---|---|
| 1 | 7-4980 | Hood | 1 |
| 2 | 17-1140 | Gas Tank Strap | 1 |
| 3 | 222-16 | Cap - Gas Tank | 1 |
| 4 | 7-4600 | Decal - Gas Tank | 1 |
| 5 | 12-4110 | Decal Hood, Left (Model 57003) | 1 |
| * | 12-4120 | Decal Hood, Right (Model 57003) | 1 |
| * | 12-4130 | Decal Hood, Left (Model 57017) | 1 |
| * | 12-4140 | Decal Hood, Right (Model 57017) | 1 |
| 6 | 221-417 | Engine (Model 57003) | 1 |

| Ref. No. | Part No. | Description | No. Used |
|---|---|---|---|
| * | 221-418 | Engine (Model 57017) | 1 |
| 7 | 321-9 | Capscrew | 2 |
| 8 | 12-4040 | Decal, Engine Shroud (Model 57017) | 1 |
| 9 | 3258-158 | Cross Recess Truss-Head Screw | 4 |
| 10 | 7-8180 | Elbow Gas Tank | 1 |
| 11 | 7-7260 | Shut-Off Valve | 1 |
| 12 | 2412-33 | Hose Clamp | 2 |
| 13 | 7-3983 | Gas Hose | 1 |
| 14 | 3-7501 | Curved Washer | 4 |
| 15 | 7-7670 | Spacer | 2 |

*Not illustrated

Copyright 1972 By
The Toro Company
Bloomington, Minnesota 55420 U.S.A.

Price $1.00

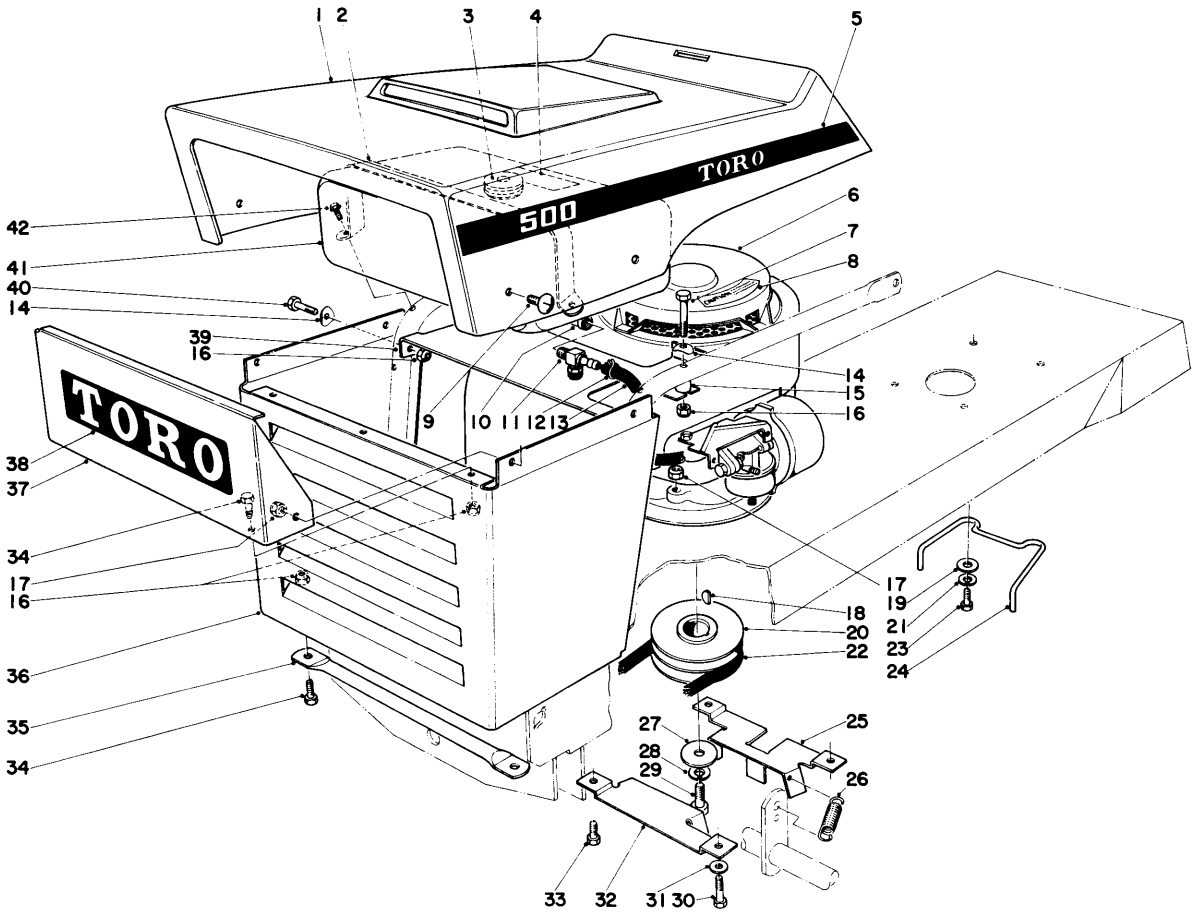


# HOOD AND ENGINE ASSEMBLY (Continued)

| Ref. No. | Part No. | Description | No. Used |
|---|---|---|---|
| 16 | 32152-4 | Locknut | 8 |
| 17 | 32152-1 | Nut | 6 |
| 18 | 3257-3 | Woodruff Key | 1 |
| 19 | 3256-3 | Washer | 2 |
| 20 | 7-3748 | Pulley Engine | 1 |
| 21 | 3253-4 | Lockwasher | 2 |
| 22 | 7-3887 | Belt | 1 |
| 23 | 322-5 | Capscrew | 2 |
| 24 | 7-4310 | Belt Retainer | 1 |
| 25 | 7-5050 | Guide - Belt | 1 |
| 26 | 7-3968 | Spring Tension | 2 |
| 27 | 3256-36 | Flatwasher | 1 |
| 28 | 3253-21 | Lockwasher | 1 |
| 29 | 3211-5 | Capscrew | 1 |

| Ref. No. | Part No. | Description | No. Used |
|---|---|---|---|
| 30 | 322-7 | Capscrew | 2 |
| 31 | 3256-23 | Washer | 2 |
| 32 | 7-3766 | Guide - Belt | 1 |
| 33 | 322-3 | Capscrew | 2 |
| 34 | 321-2 | Capscrew | 4 |
| 35 | 7-3682 | Rod - Grille Mount | 1 |
| 36 | 12-3450 | Grille | 1 |
| 37 | 7-8000 | Panel Grille | 1 |
| 38 | 12-4260 | Decal - Grille Panel | 1 |
| 39 | 7-7290 | Tray, Gas Tank | 1 |
| 40 | 321-8 | Capscrew | 2 |
| 41 | 17-1130 | Gas Tank | 1 |
| 42 | 32104-75 | Self-Tapping Screw | 2 |

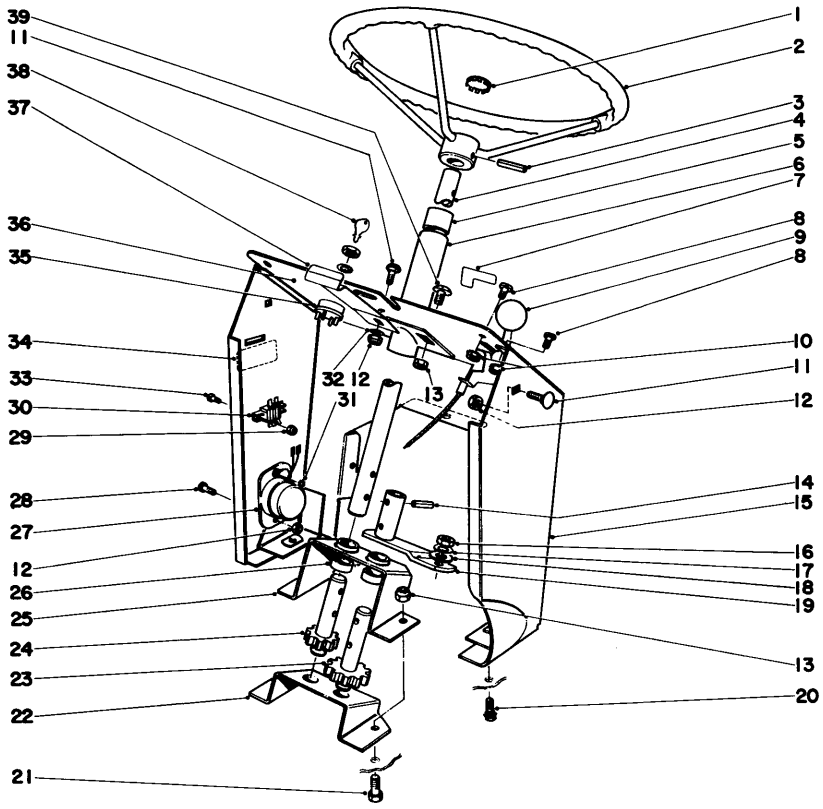


# STEERING AND DASH ASSEMBLY

| Ref. No. | Part No. | Description | No. Used |
|---|---|---|---|
| 1 | 7-3892 | Plug Button | 1 |
| 2 | 7-3722 | Steering Wheel | 1 |
| 3 | 32121-15 | Roll Pin | 1 |
| 4 | 7-3723 | Steering Shaft | 1 |
| 5 | 256-167 | Bushing | 1 |
| 6 | 7-3725 | Steering Tube (Incl. Ref. #5) | 1 |
| 7 | 12-4050 | Decal (Model 57003) | 1 |
| 8 | 3251-2 | Pan-Head Screw | 6 |
| 9 | 12-7620 | Throttle Control | 1 |
| 10 | 32149-7 | Keps Nut | 6 |
| 11 | 3229-22 | Carriage Bolt | 3 |
| 12 | 32146-17 | Locknut | 5 |
| 13 | 32152-1 | Locknut | 3 |
| 14 | 32121-4 | Roll Pin | 3 |
| 15 | 12-3470 | Rear Hood Support (Model 57003) | 1 |
| * | 12-3570 | Rear Hood Support (Model 57017) | 1 |
| 16 | 3219-3 | Nut | 1 |
| 17 | 3253-21 | Lockwasher | 1 |
| 18 | 3256-4 | Washer | 1 |
| 19 | 7-3883 | Steering Arm | 1 |
| 20 | 32140-15 | Sems Self-Tapping Screw | 2 |

| Ref. No. | Part No. | Description | No. Used |
|---|---|---|---|
| 21 | 322-3 | Capscrew | 2 |
| 22 | 7-3710 | Bracket Steering | 1 |
| 23 | 7-3733 | Steering Gear Assembly | 1 |
| 24 | 7-3734 | Pinion Gear Assembly | 1 |
| 25 | 7-3711 | Support Steering | 1 |
| 26 | 7-3747 | Spacer | 2 |
| 27 | 12-3350 | Ignition Interlock | 1 |
| 28 | 3290-145 | Pan-Head Screw | 2 |
| 29 | 3296-52 | Locknut | 2 |
| 30 | 12-6730 | Terminal Block | 1 |
| 31 | 3255-7 | Ext. Lockwasher | 1 |
| 32 | 3256-22 | Washer | 2 |
| 33 | 3290-93 | Pan-Head Screw | 2 |
| 34 | 12-4030 | Decal-Warning (Model 57017) | 1 |
| 35 | 12-2810 | Switch (Model 57003) | 1 |
| * | 12-2820 | Switch (Model 57017) | 1 |
| 36 | 12-4000 | Decal Dash (Model 57003) | 1 |
| * | 12-8350 | Decal Dash (Model 57017) | 1 |
| 37 | 7-5080 | Latch Hood | 1 |
| 38 | 218-412 | Key (Set of 2) | 1 |
| 39 | 3258-158 | Cross Recess Truss-Head Screw | 2 |
| * | 5-5559 | Loose Parts Bag (57017) | 1 |
| * | 5-5529 | Loose Parts Bag (57003) | 1 |

*Not illustrated

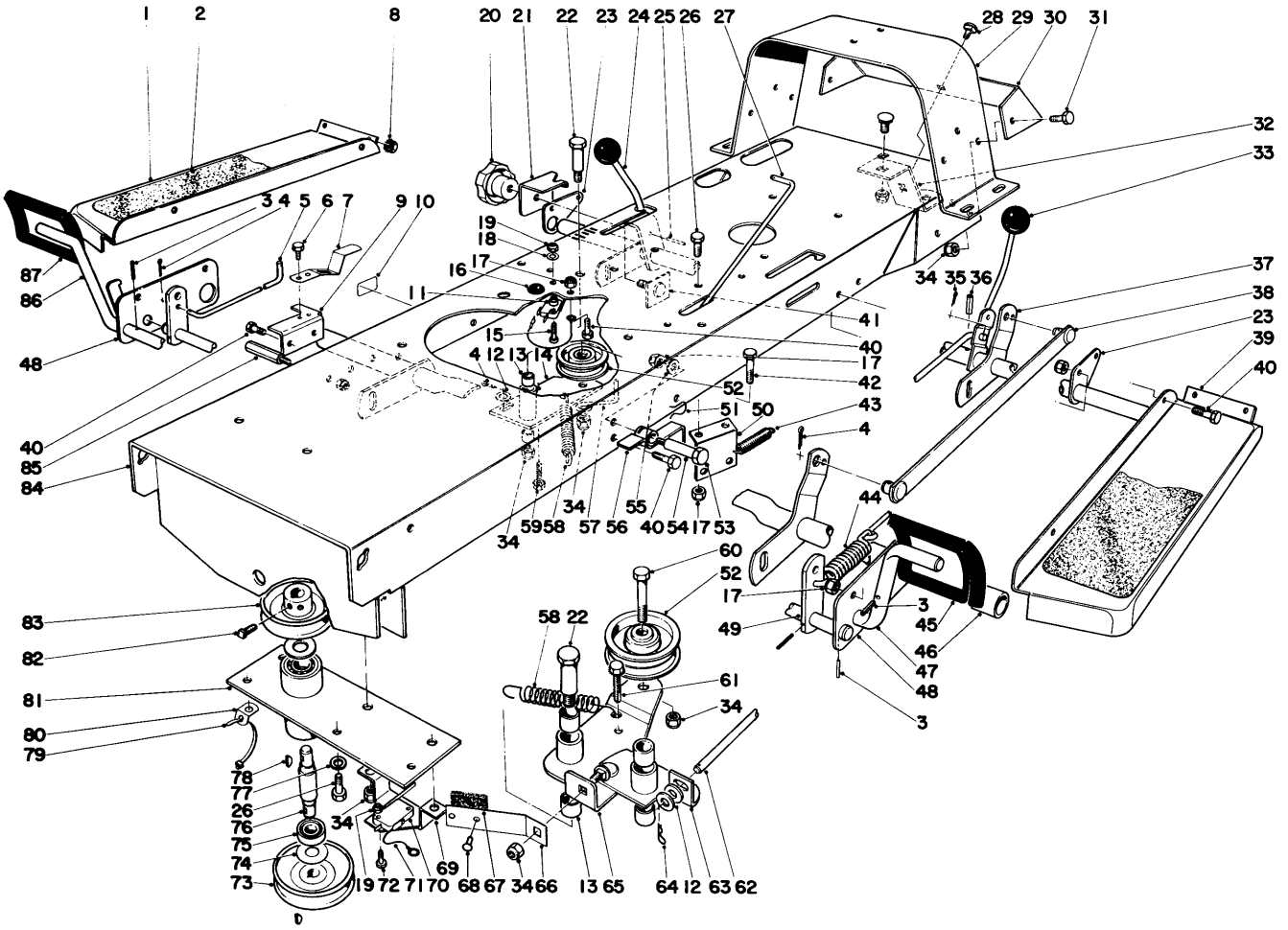

# FRAME ASSEMBLY

| Ref. No. | Part No. | Description | No. Used |
|---|---|---|---|
| 1 | 7-3680 | Footrest | 1 |
| 2 | 7-3894 | Foot Pad | 2 |
| 3 | 32121-45 | Roll Pin | 6 |
| 4 | 3272-6 | Cotter Pin | 4 |
| 5 | 7-3741 | Rod - Clutch | 1 |
| 6 | 32140-66 | Sems Self-Tapping Screw | 2 |
| 7 | 12-5340 | Brake Lock | 1 |
| 8 | 32149-7 | Keps Nut | 4 |
| 9 | 12-5330 | Bracket - Brake Lock | 1 |
| 10 | 12-4020 | Decal - Parking Brake | 1 |
| 11 | 12-3330 | Spacer | 2 |
| 12 | 3256-2 | Flat Washer | 2 |
| 13 | 256-172 | Bushing | 4 |
| 14 | 12-3760 | Idler Arm (Incl. Ref. #13) | 1 |
| 15 | 3290-329 | Screw, Pan-Head | 2 |
| 16 | 237-62 | Grommet | 1 |
| 17 | 32152-1 | Nut | 14 |
| 18 | 5-1254 | Washer | 2 |
| 19 | 3296-52 | Locknut | 4 |
| 20 | 7-3902 | Knob | 1 |
| 21 | 7-3772 | Slide Height Adj. Tube | 1 |
| 22 | 12-7610 | Shoulder Bolt | 3 |
| 23 | 7-3671 | Bracket Tube | 2 |

| Ref. No. | Part No. | Description | No. Used |
|---|---|---|---|
| 24 | 7-3763 | Rod Control Height Adj. | 1 |
| 25 | 32121-51 | Roll Pin | 1 |
| 26 | 322-2 | Capscrew | 9 |
| 27 | 12-5350 | Brake Rod | 1 |
| 28 | 3231-21 | Carriage Bolt | 3 |
| 29 | 7-3735 | Support, Rear | 1 |
| 30 | 7-3790 | Frame Member, Rear | 1 |
| 31 | 323-4 | Capscrew | 6 |
| 32 | 7-3775 | Bracket Hitch | 1 |
| 33 | 233-22 | Knob | 2 |
| 34 | 32152-2 | Nut | 14 |
| 35 | 3272-5 | Cotter Pin | 1 |
| 36 | 32121-29 | Roll Pin | 1 |
| 37 | 7-3758 | Rear Height Adj. Tube | 1 |
| 38 | 7-3761 | Height Adj. Link | 1 |
| 39 | 7-3681 | Footrest | 1 |
| 40 | 322-3 | Capscrew | 8 |
| 41 | 7-3667 | Knob Plate | 1 |
| 42 | 323-9 | Capscrew | 1 |
| 43 | 7-1322 | Spring | 1 |
| 44 | 12-5360 | Spring - Brake Rod | 1 |
| 45 | 7-3901 | Foot Pad - Clutch | 1 |
| 46 | 7-9150 | Front Height Adj. Tube | 1 |

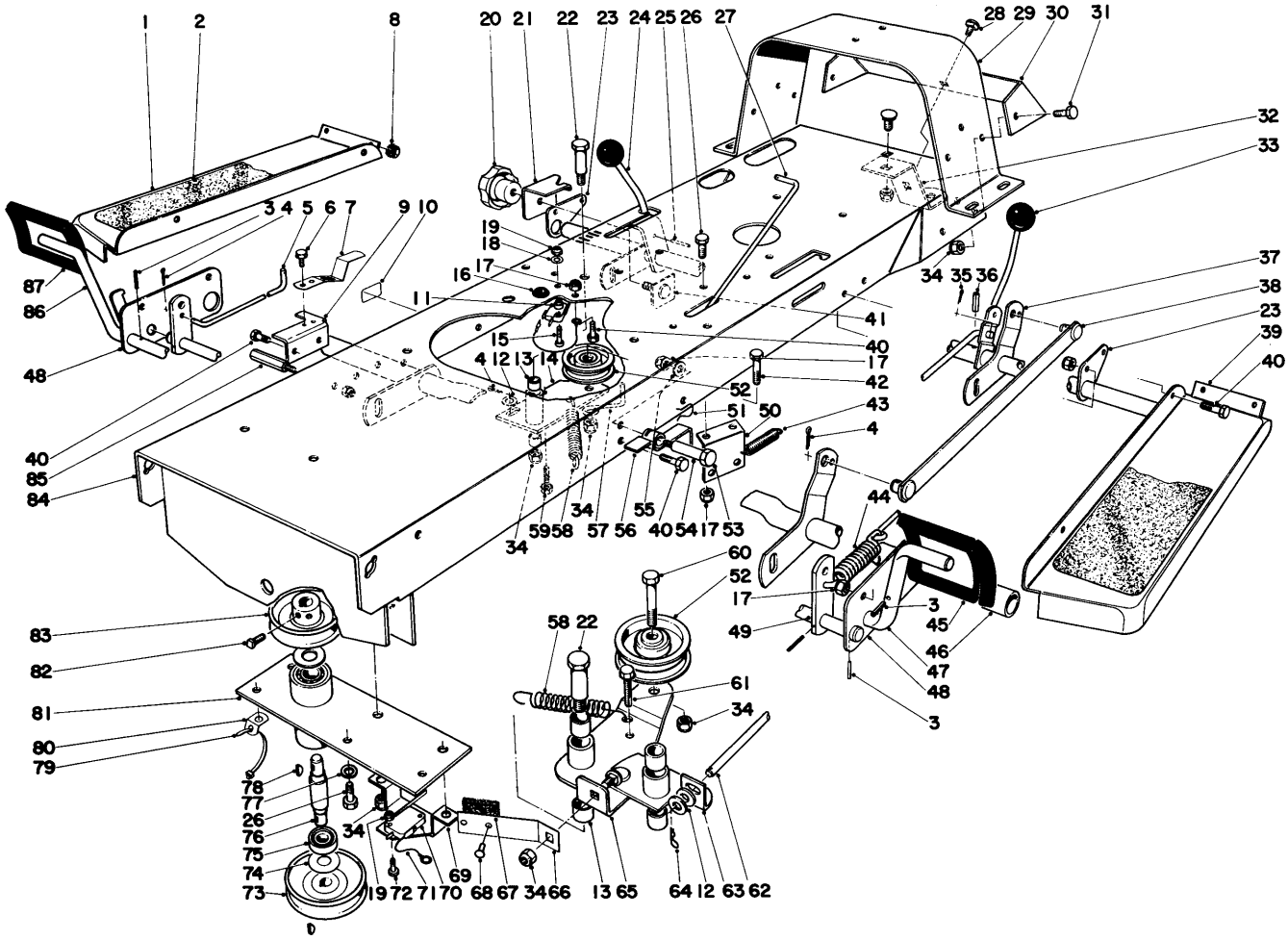

# FRAME ASSEMBLY (Continued)

| Ref. No. | Part No. | Description | No. Used |
|---|---|---|---|
| 47 | 12-3890 | Clutch Pedal | 1 |
| 48 | 7-3670 | Plate Tube | 2 |
| 49 | 7-3683 | Arm Lever | 2 |
| 50 | 7-3967 | Guide - Belt | 1 |
| 51 | 12-5410 | Retainer Clutch Lock | 1 |
| 52 | 3-4244 | Pulley Idler | 2 |
| 53 | 322-14 | Capscrew | 1 |
| 54 | 17-0410 | Spacer Split | 1 |
| 55 | 3256-23 | Washer | 1 |
| 56 | 12-5380 | Clutch Lock | 1 |
| 57 | 7-0751 | Retainer - Belt | 1 |
| 58 | 7-3970 | Spring Tension | 2 |
| 59 | 32140-14 | Sems Screw | 1 |
| 60 | 323-8 | Capscrew | 1 |
| 61 | 32140-92 | Sems Screw | 1 |
| 62 | 7-3885 | Rod - Blade Clutch | 1 |
| 63 | 7-3800 | Pivot Bracket | 1 |
| 64 | 3290-307 | Hairpin | 1 |
| 65 | 12-3690 | Idler Plate (Incl. Ref.#13) | 1 |
| 66 | 7-3801 | Clutch Brake Spring | 1 |
| 67 | 7-0643 | Blade Brake Lining | 1 |

| Ref. No. | Part No. | Description | No. Used |
|---|---|---|---|
| 68 | 3295-21 | Rivet | 2 |
| 69 | 12-3480 | Bracket Switch | 1 |
| 70 | 12-3320 | Switch Micro | 2 |
| 71 | 12-8330 | Wire Assembly | 2 |
| 72 | 3290-93 | Pan-Head Screw | 2 |
| 73 | 7-3793 | Pulley | 1 |
| 74 | 7-0777 | Bearing Washer | 2 |
| 75 | 251-5 | Bearing | 2 |
| 76 | 7-3728 | Shaft Pulley | 1 |
| 77 | 3253-4 | Lockwasher | 4 |
| 78 | 3257-5 | Key - Woodruff | 2 |
| 79 | 7-3123 | Cable Tie | 1 |
| 80 | 12-5440 | Strap Cable Tie | 1 |
| 81 | 7-3730 | Pulley Tube | 1 |
| 82 | 3242-1 | Set Screw Sq. Hd. | 4 |
| 83 | 7-3796 | Pulley | 1 |
| 84 | 12-3420 | Frame | 1 |
| 85 | 7-3668 | Stop Pedal | 1 |
| 86 | 12-5300 | Brake Pedal | 1 |
| 87 | 7-3900 | Foot Pad - Brake | 1 |

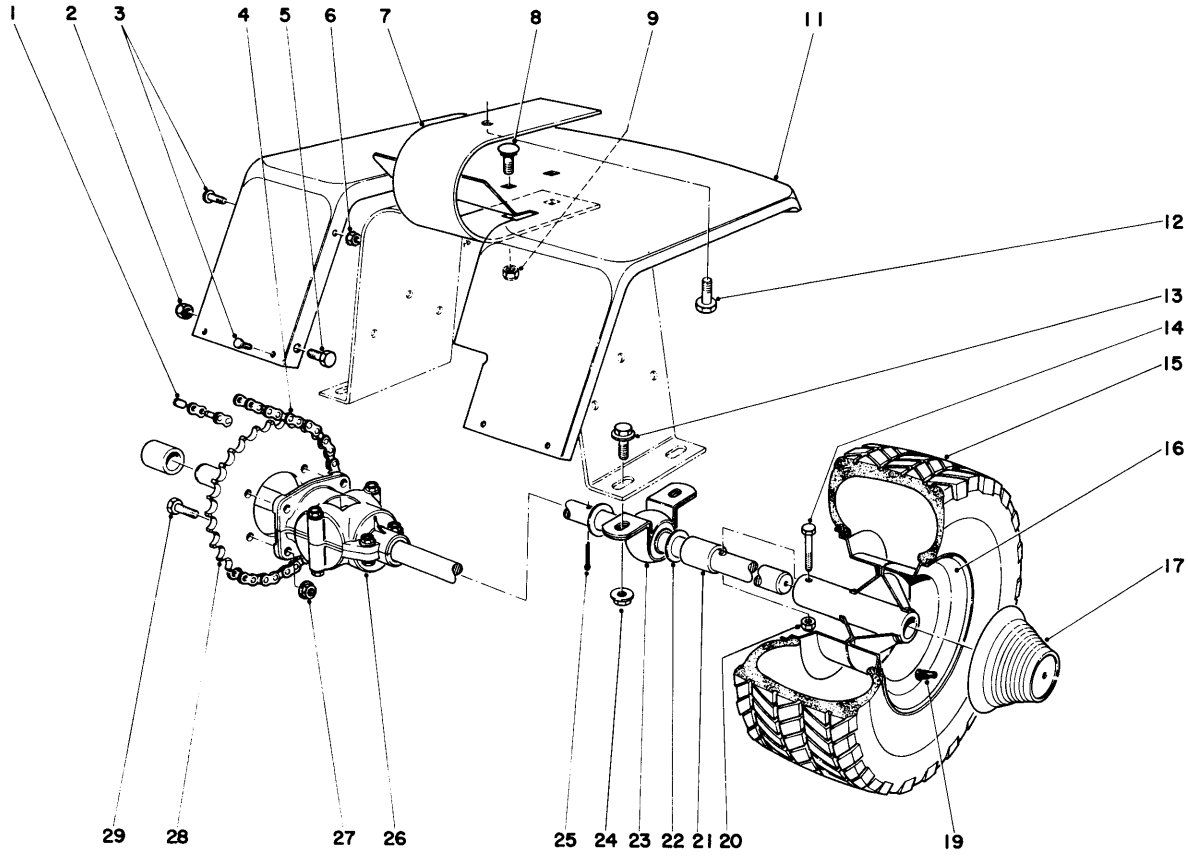


# REAR AXLE ASSEMBLY

| Ref. No. | Part No. | Description | No. Used |
|---|---|---|---|
| 1 | 2710-6 | Connecting Link | 1 |
| 2 | 32152-1 | Locknut | 2 |
| 3 | 3290-111 | Pan-Head Screw | 6 |
| 4 | 12-8340 | Chain | 1 |
| 5 | 322-3 | Capscrew | 2 |
| 6 | 32149-7 | Keps Nut | 2 |
| 7 | 7-8650 | Spring - Seat | 1 |
| 8 | 3231-2 | Carriage Bolt | 2 |
| 9 | 32152-2 | Locknut | 2 |
| 11 | 7-3745 | Fender | 1 |
| 12 | 3235-4 | Capscrew | 1 |
| 13 | 3234-1 | Flanged Capscrew | 4 |
| 14 | 323-9 | Capscrew | 2 |
| 15 | 231-49 | Terra Tire | 2 |

| Ref. No. | Part No. | Description | No. Used |
|---|---|---|---|
| * | 231-67 | Turf King Tire | 2 |
| 16 | 241-110 | Rim | 2 |
| 17 | 12-9200 | Hub Cap-Rear | 2 |
| 19 | 232-27 | Valve Stem | 2 |
| 20 | 32153-2 | Locknut | 2 |
| 21 | 12-3870 | Tube - Rear Axle | 2 |
| 22 | 11-4930 | Washer | 1 |
| 23 | 12-3340 | Pillow Block | 2 |
| 24 | 32128-19 | Flanged Locknut | 4 |
| 25 | 3272-23 | Cotter Pin | 1 |
| 26 | 12-3550 | Differential | 1 |
| 27 | 32128-20 | Flanged Locknut | 4 |
| 28 | 12-3560 | Sprocket | 1 |
| 29 | 322-5 | Capscrew | 4 |

*Not illustrated

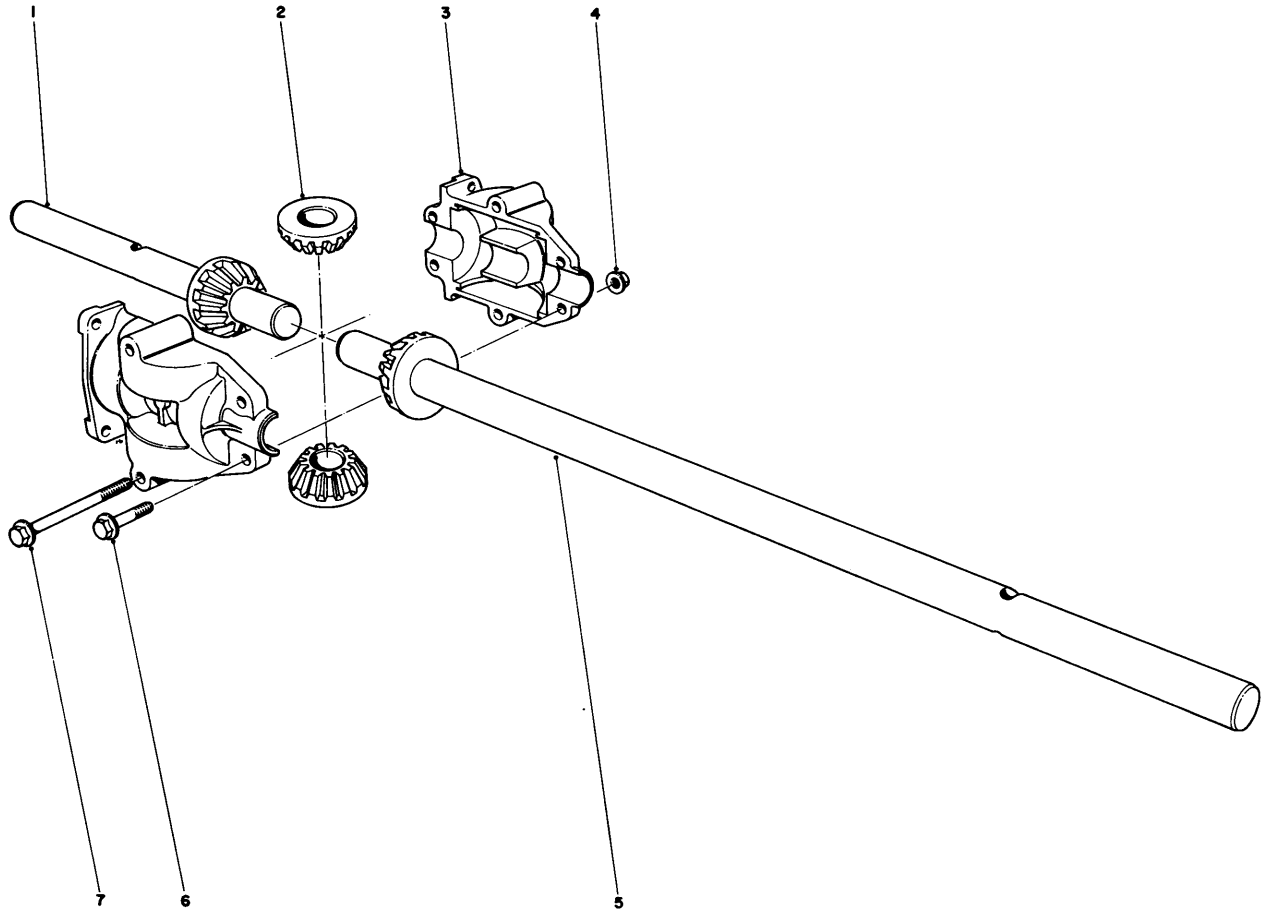


# DIFFERENTIAL ASSEMBLY

| Ref. No. | Part No. | Description | No. Used |
|---|---|---|---|
| 1 | 2119-540 | Axle Shaft, Short, With Gear | 1 |
| 2 | 2119-535 | Miter Gear | 2 |
| 3 | 2119-532 | Housing Half | 2 |
| 4 | 32128-16 | Locknut | 6 |

| Ref. No. | Part No. | Description | No. Used |
|---|---|---|---|
| 5 | 2119-541 | Axle Shaft, Long, With Gear | 1 |
| 6 | 2119-531 | Bolt, Short | 4 |
| 7 | 2119-533 | Bolt, Long | 2 |

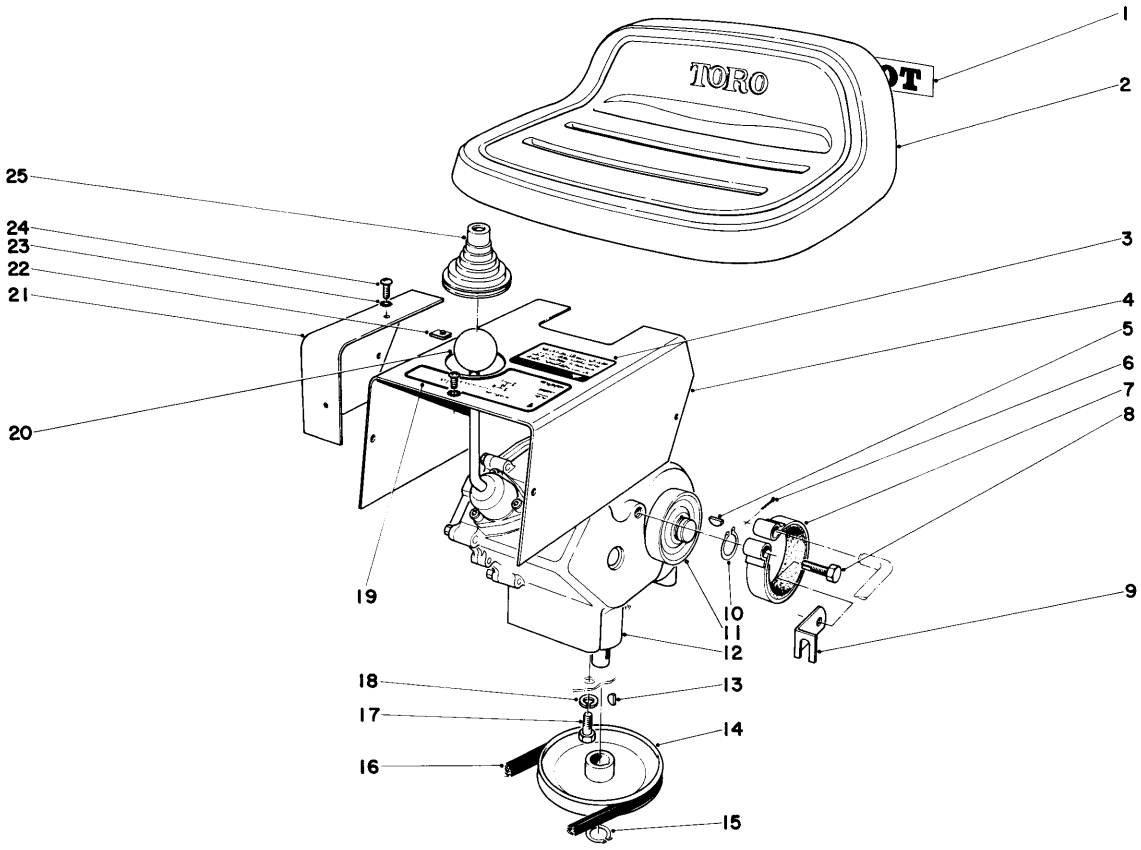


# TRANSMISSION ASSEMBLY

| Ref. No. | Part No. | Description | No. Used |
|---|---|---|---|
| 1 | 12-2940 | Decal | 1 |
| 2 | 12-2780 | Seat | 1 |
| 3 | 12-2900 | Decal - Caution | 1 |
| 4 | 7-3784 | Cover - Transmission | 1 |
| 5 | 3257-5 | Woodruff Key | 1 |
| 6 | 3272-6 | Cotter Pin | 1 |
| 7 | 7-6340 | Brake Band | 1 |
| 8 | 32104-107 | Self-Tapping Screw | 1 |
| 9 | 7-6300 | Retainer - Brake Rod | 1 |
| 10 | 32120-72 | External Retaining Ring | 1 |
| 11 | 7-3785 | Brake Drum | 1 |
| 12 | 7-3708 | Transmission | 1 |
| 13 | 3257-32 | Woodruff Key | 1 |

| Ref. No. | Part No. | Description | No. Used |
|---|---|---|---|
| 14 | 7-4085 | Pulley | 1 |
| 15 | 32120-64 | Retaining Ring | 1 |
| 16 | 7-3890 | Belt - Transmission-To-Engine | 1 |
| 17 | 322-2 | Capscrew | 4 |
| 18 | 3253-24 | Lockwasher | 2 |
| 19 | 12-4010 | Decal, Shift Pattern (Mod.57003) | 1 |
| * | 12-3970 | Decal, Shift Pattern (Mod.57017) | 1 |
| 20 | 233-21 | Knob | 1 |
| 21 | 7-3873 | Guard - Chain | 1 |
| 22 | 3290-191 | Tinnerman Nut | 5 |
| 23 | 3255-17 | Lockwasher | 5 |
| 24 | 3290-111 | Pan-Head Screw | 5 |
| 25 | 7-3893 | Boot - Shift Lever | 1 |

*Not illustrated

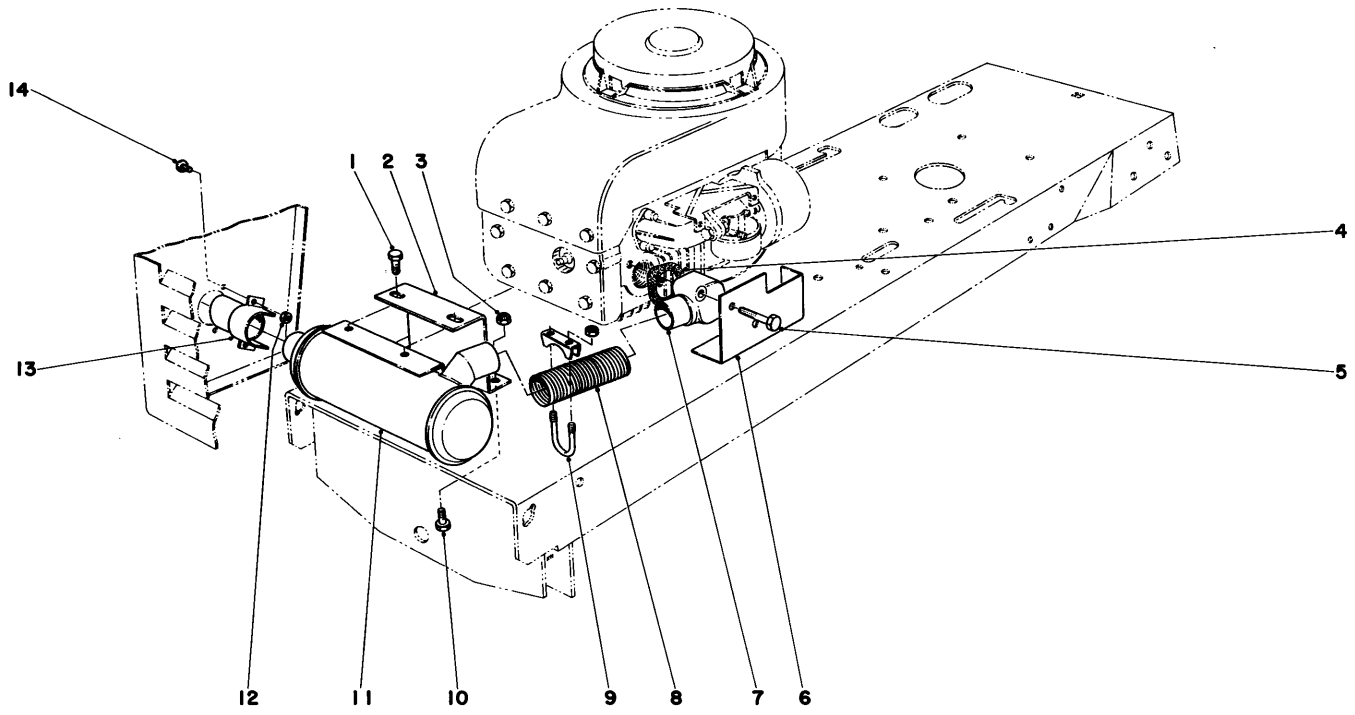


# EXHAUST SYSTEM

| Ref. No. | Part No. | Description | No. Used |
|---|---|---|---|
| 1 | 322-1 | Capscrew | 2 |
| 2 | 17-5080 | Support - Muffler | 1 |
| 3 | 32152-1 | Nut | 2 |
| 4 | 7-8430 | Gasket | 1 |
| 5 | 3235-5 | Capscrew | 2 |
| 6 | 17-1020 | Baffle Heat | 1 |
| 7 | 7-8770 | Elbow - Exhaust | 1 |

| Ref. No. | Part No. | Description | No. Used |
|---|---|---|---|
| 8 | 7-8700 | Tubing Exhaust | 1 |
| 9 | 5-3179 | Muffler Clamp Assembly | 2 |
| 10 | 322-2 | Capscrew | 2 |
| 11 | 7-7170 | Muffler | 1 |
| 12 | 32153-1 | Locknut | 2 |
| 13 | 7-7070 | Exhaust Tip | 1 |
| 14 | 3251-2 | Round-Head Screw | 2 |

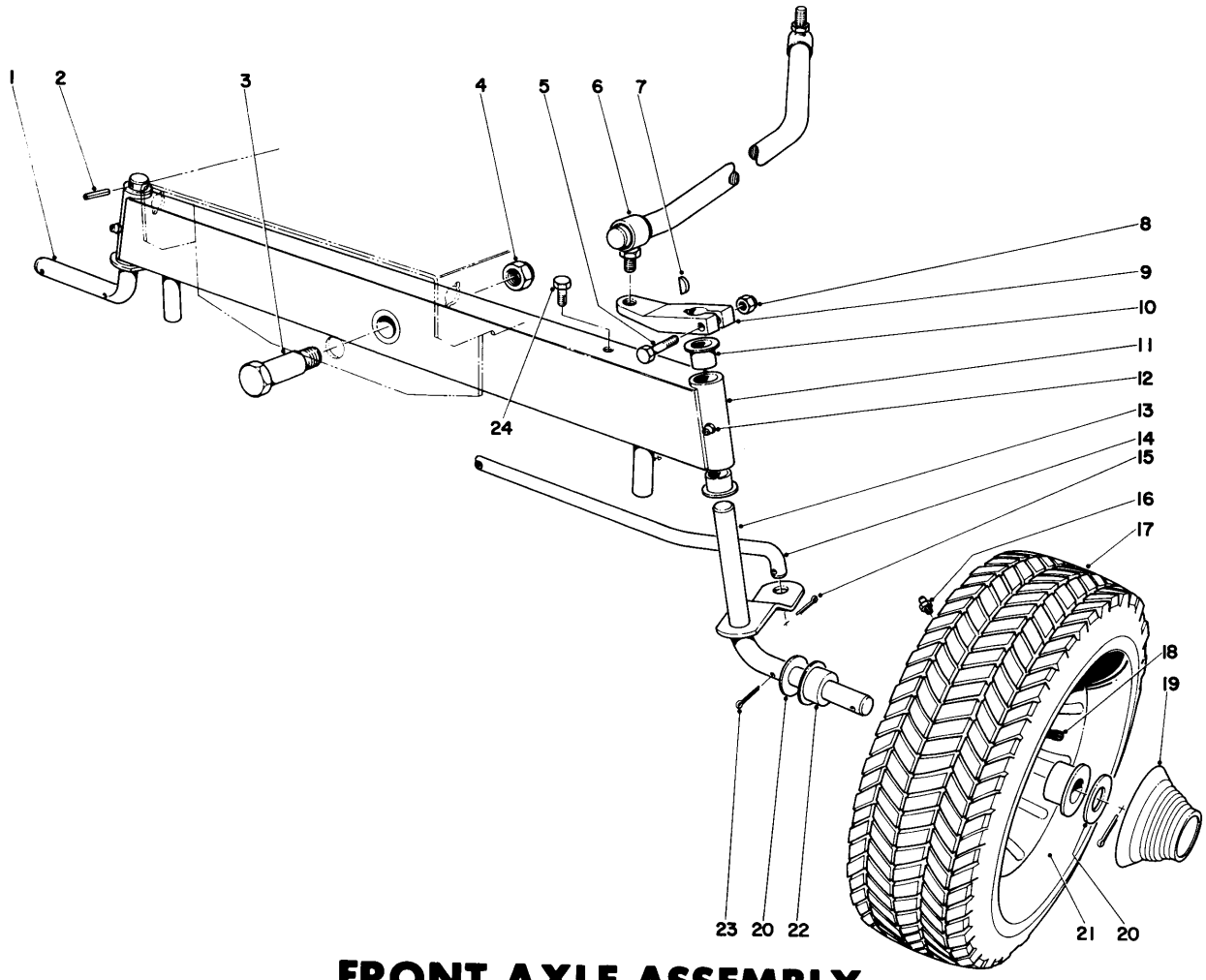


# FRONT AXLE ASSEMBLY

| Ref. No. | Part No. | Description | No. Used |
|---|---|---|---|
| 1 | 7-3718 | Spindle, R.H. | 1 |
| 2 | 32121-50 | Roll Pin | 1 |
| 3 | 7-3884 | Shoulder Bolt Front Axle Pivot | 1 |
| 4 | 32152-3 | Nut | 1 |
| 5 | 321-9 | Capscrew | 1 |
| 6 | 7-4760 | Steering Rod | 1 |
| 7 | 3257-24 | Key - Woodruff | 1 |
| 8 | 32152-4 | Nut | 1 |
| 9 | 7-3706 | Arm - Steering | 1 |
| 10 | 256-90 | Bushing | 4 |
| 11 | 7-3698 | Front Axle (Incl. Ref. #10) | 1 |
| 12 | 302-49 | Zerk Fitting | 2 |
| 13 | 7-3715 | Spindle, L.H. | 1 |

| Ref. No. | Part No. | Description | No. Used |
|---|---|---|---|
| 14 | 7-3776 | Tie Rod | 1 |
| 15 | 3272-6 | Cotter Pin | 2 |
| 16 | 302-5 | Grease Fitting | 2 |
| 17 | 231-77 | Turf King Tire | 2 |
| * | 231-55 | Traction Tread Tire | 2 |
| 18 | 232-27 | Valve Stem | 2 |
| 19 | 7-3932 | Hub Cap - Front | 2 |
| 20 | 3256-27 | Flatwasher | 4 |
| 21 | 217-80 | Rim (Incl. Ref. #22) | 2 |
| 22 | 256-170 | Bushing | 4 |
| 23 | 3272-12 | Cotter Pin | 4 |
| 24 | 32104-6 | Self-Tapping Screw | 1 |

*Not illustrated

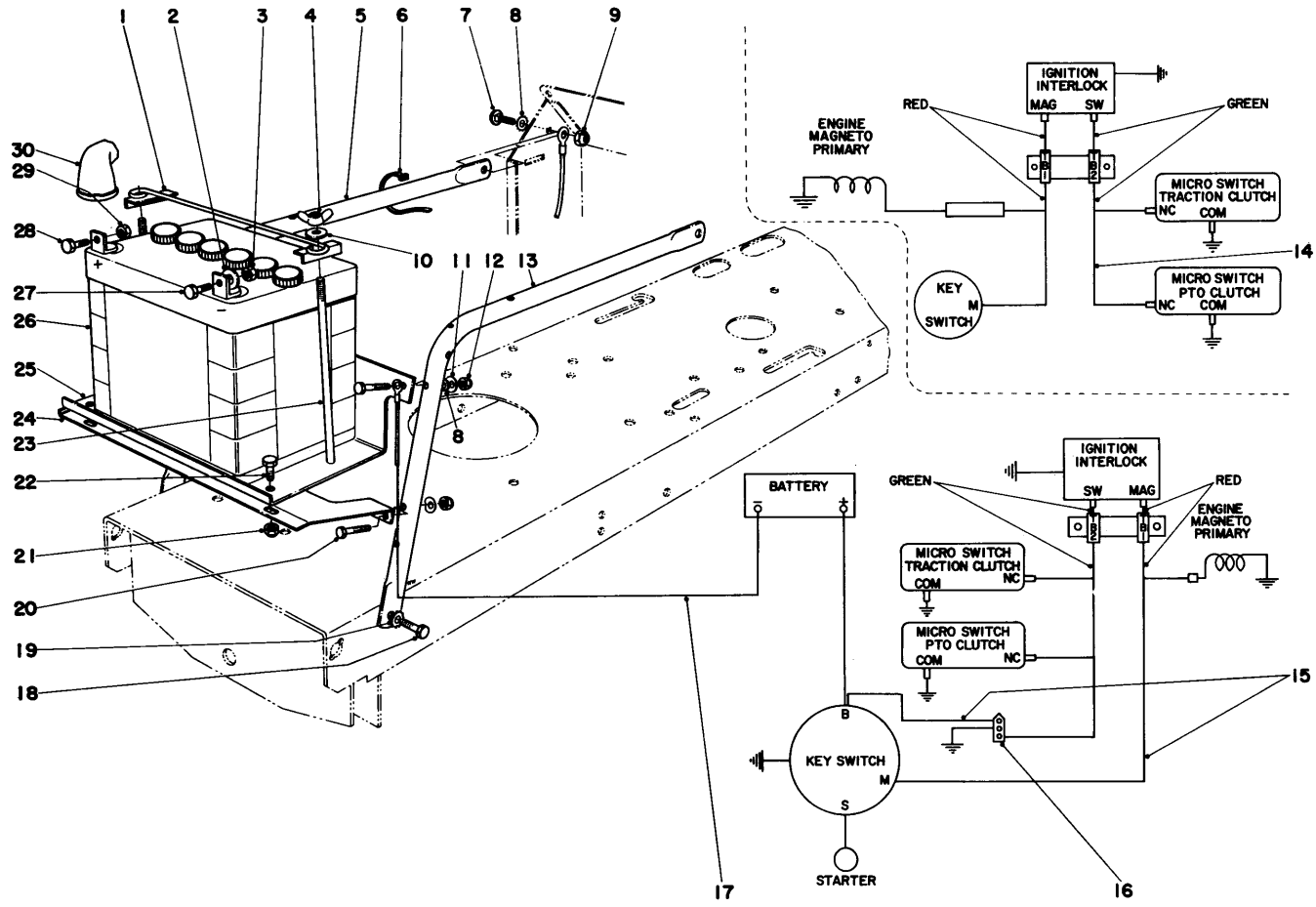


# ELECTRICAL DIAGRAM

| Ref. No. | Part No. | Description | No. Used |
|---|---|---|---|
| 1 | 7-5000 | Battery Clamp (Model 57017 Only) | 1 |
| 2 | 3256-16 | Washer (Model 57017 Only) | 1 |
| 3 | 3217-5 | Nut (Model 57017 Only) | 1 |
| 4 | 32103-19 | Wing Nut (Model 57017 Only) | 1 |
| 5 | 7-7390 | Support - Gas Tank, Right | 1 |
| 6 | 7-3123 | Cable Tie | 3 |
| 7 | 3229-22 | Carriage Bolt | 1 |
| 8 | 3255-7 | Ext. Tooth Lockwasher (Model 57017 Only) | 2 |
| 9 | 32146-17 | Locknut | 1 |
| 10 | 3256-22 | Flat Washer (Model 57017 Only) | 2 |
| 11 | 3-7501 | Washer, Curved (Model 57017 Only) | 4 |
| 12 | 32152-4 | Locknut (Model 57017 Only) | 4 |
| 13 | 7-7380 | Support - Gas Tank, Left | 1 |
| 14 | 12-3440 | Wire Harness (Model 57003 Only) | 1 |
| 15 | 12-3540 | Wire Harness (Model 57017 Only) | 1 |
| 16 | 12-3360 | Socket Assembly (Model 57017 Only) | 1 |

| Ref. No. | Part No. | Description | No. Used |
|---|---|---|---|
| 17 | 7-4080 | Wire (Model 57017 Only) | 1 |
| 18 | 322-2 | Capscrew | 2 |
| 19 | 3255-8 | Lockwasher Ext. Tooth | 2 |
| 20 | 321-8 | Capscrew (Model 57017 Only) | 4 |
| 21 | 32152-4 | Locknut (Model 57017 Only) | 2 |
| 22 | 321-3 | Capscrew (Model 57017 Only) | 2 |
| 23 | 7-3328 | Battery Bolt (Model 57017 Only) | 2 |
| 24 | 12-3390 | Brace Battery Shelf (Model 57017 Only) | 1 |
| 25 | 12-3380 | Shelf Battery (Model 57017 Only) | 1 |
| 26 | 239-15 | Battery (Model 57017 Only) | 1 |
| 27 | 321-4 | Capscrew (Model 57017 Only) | 1 |
| 28 | 322-3 | Capscrew (Model 57017 Only) | 1 |
| 29 | 3217-6 | Nut (Model 57017 Only) | 1 |
| 30 | 218-331 | Battery Boot (Model 57017 Only) | 2 |
| * | 7-6580 | Battery Charger | 1 |
| * | 2210-126 | Starter Rope | 1 |

*Not Illustrated

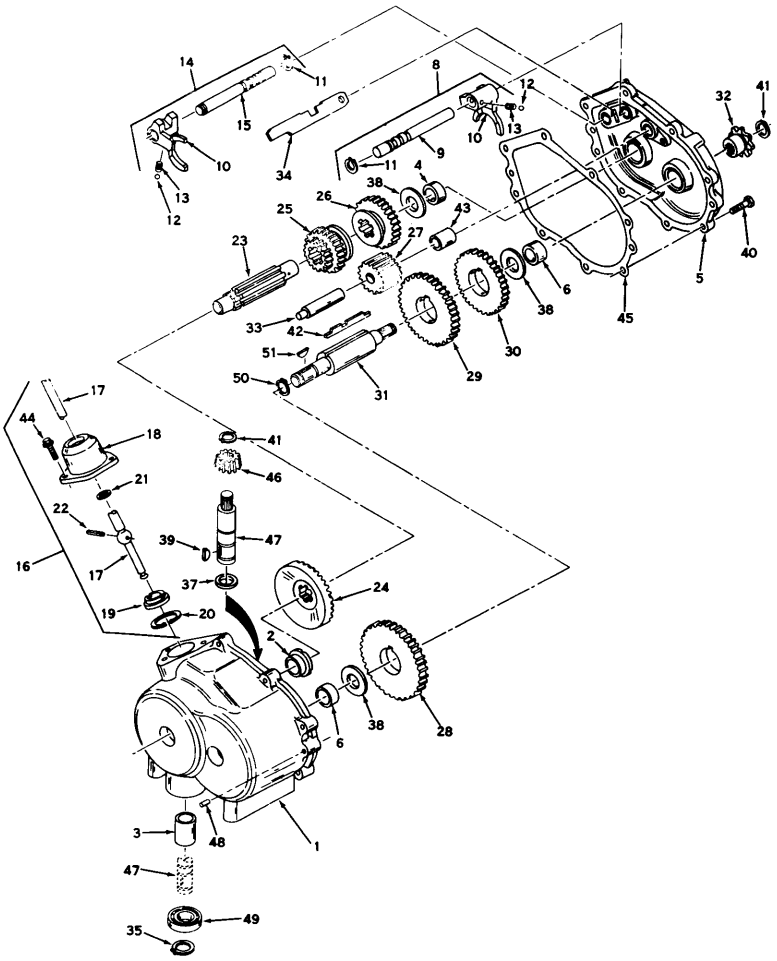

# MODEL 352 TRANSMISSION

| Ref. No. | Part No. | Description | No. Used |
|---|---|---|---|
| 1 | 770048 | Case Assembly Transmission (Incl. Nos. 2, 3 & 6) | 1 |
| 2 | 780079 | Bearing, Bronze | 1 |
| 3 | 780087 | Bearing, Bronze | 1 |
| 4 | 780080 | Bearing, Bronze | 1 |
| 5 | 772060 | Cover Assembly, Transmission (Incl. Nos. 4 & 6) | 1 |
| 6 | 780081 | Bushing, Bronze | 1 |
| 8 | 784079 | Rod Assembly, Shift (Incl. Nos. 9 thru 13) | 1 |
| 9 | 784083 | Rod, Shift | 1 |
| 10 | 784004 | Fork, Shifter | 1 |
| 11 | 792017 | Ring, Retainer | 1 |
| 12 | 792004 | Ball, Steel | 1 |
| 13 | 792003 | Spring | 1 |
| 14 | 784128 | Rod Assembly, Shift (Incl. Nos. 10 thru 13 & 15) | 1 |
| 15 | 784129 | Rod, Shift | 1 |
| 16 | 784177 | Lever & Housing Assy., Shift (Incl. Nos. 17 thru 22) | 1 |
| 17 | 784178 | Lever, Shift | 1 |
| 18 | 784088 | Housing, Shift Lever | 1 |
| 19 | 784094 | Keeper, Shift Lever | 1 |
| 20 | 792016 | Ring, Snap | 1 |
| 21 | 792001 | Ring, Quad | 1 |
| 22 | 792002 | Pin, Roll | 1 |
| 23 | 776079 | Shaft, Shifter | 1 |

| Ref. No. | Part No. | Description | No. Used |
|---|---|---|---|
| 24 | 778070 | Gear, Bevel (33 teeth) | 1 |
| 25 | 778071 | Gear, Shift (1st & 2nd) | 1 |
| 26 | 778072 | Gear, Shift (3rd & Rev.) | 1 |
| 27 | 778073 | Idler, Reverse | 1 |
| 28 | 778074 | Gear (39 teeth) | 1 |
| 29 | 778062 | Gear (34 teeth) | 1 |
| 30 | 778075 | Gear (30 teeth) | 1 |
| 31 | 776083 | Shaft, Output | 1 |
| 32 | 786047 | Sprocket (8 teeth) | 1 |
| 33 | 776081 | Shaft, Reverse Idler | 1 |
| 34 | 784132 | Stop, Shifter | 1 |
| 35 | 792035 | Ring, Retainer | 1 |
| 37 | 780082 | Bearing, Thrust | 1 |
| 38 | 780001 | Washer | 1 |
| 39 | 792045 | Key, Woodruff | 1 |
| 40 | 792046 | Screw, Hex Head self tap | 1 |
| 41 | 788040 | Ring, Retainer | 1 |
| 42 | 792034A | Key, Counter shaft | 1 |
| 43 | 786036 | Spacer, Reverse Idler | 1 |
| 44 | 792007 | Screw, Socket head cap | 1 |
| 45 | 788041 | Gasket, Transmission | 1 |
| 46 | 778077 | Pinion, Input | 1 |
| 47 | 776098 | Shaft, Input | 1 |
| 48 | 786026 | Pin, Dowel | 1 |
| 49 | 780092 | Bearing, Ball | 1 |
| 50 | 788038 | Ring, Retaining | 1 |
| 51 | 792047 | Key, Woodruff | 1 |

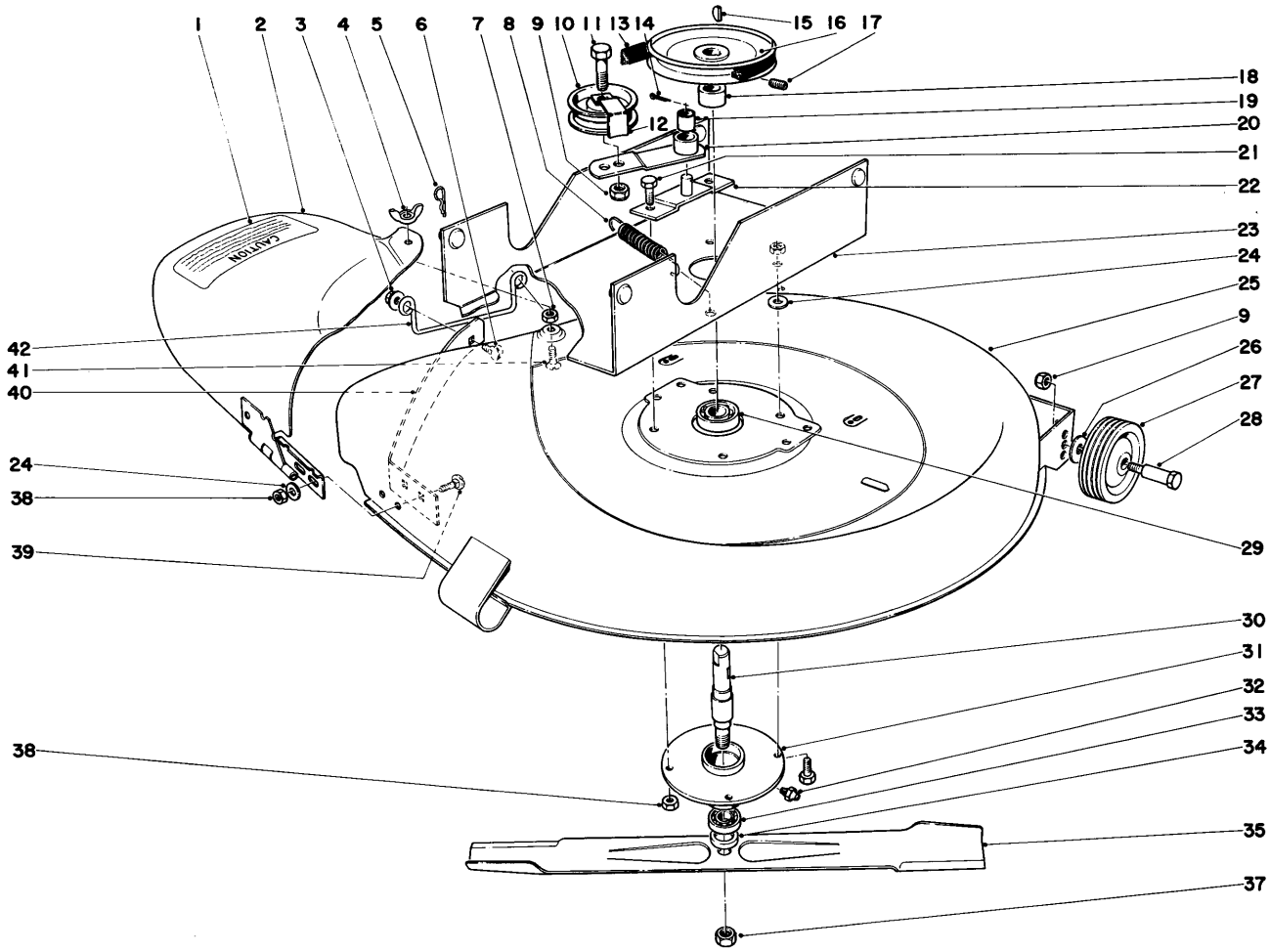


# 25" MOWER ASSEMBLY

| Ref. No. | Part No. | Description | No. Used |
|---|---|---|---|
| 1 | 12-2890 | Decal - Deflector Caution | 1 |
| 2 | 12-3590 | Deflector | 1 |
| 3 | 32128-10 | Flange Nut | 2 |
| 4 | 3-2625 | Wing Nut | 1 |
| 5 | 3290-250 | Hairpin Cotter | 4 |
| 6 | 3229-22 | Carriage Bolt | 2 |
| 7 | 3290-147 | Tinnerman Nut | 1 |
| 8 | 7-3984 | Spring | 1 |
| 9 | 32152-2 | Locknut | 3 |
| 10 | 7-8690 | Pulley Idler | 1 |
| 11 | 323-9 | Capscrew | 1 |
| 12 | 7-7960 | Retainer Belt | 1 |
| 13 | 7-3888 | Belt | 1 |
| 14 | 3272-6 | Cotter Pin | 1 |
| 15 | 3257-5 | Woodruff Key | 1 |
| 16 | 7-3795 | Pulley | 1 |
| 17 | 3246-3 | Set Screw | 2 |
| 18 | 7-3747 | Spacer Blade Spindle | 1 |
| 19 | 256-172 | Bushing | 1 |
| 20 | 7-8790 | Idler Plate (Incl. Ref. #19) | 1 |
| 21 | 322-4 | Capscrew | 4 |

| Ref. No. | Part No. | Description | No. Used |
|---|---|---|---|
| 22 | 7-3798 | Pivot Bracket | 1 |
| 23 | 7-3697 | Channel | 1 |
| 24 | 3256-23 | Washer | 4 |
| 25 | 12-4310 | Housing | 1 |
| 26 | 3256-6 | Washer | 2 |
| 27 | 11-1580 | Wheel | 2 |
| 28 | 12-7610 | Shoulder Bolt | 2 |
| 29 | 251-5 | Bearing | 1 |
| 30 | 7-3744 | Spindle Blade | 1 |
| 31 | 7-0287 | Mower Spindle Housing | 1 |
| 32 | 302-5 | Zerk Fitting | 1 |
| 33 | 251-123 | Bearing | 1 |
| 34 | 17-0160 | Spacer Spindle | 1 |
| 35 | 12-2930 | Blade | 1 |
| 37 | 32152-6 | Locknut | 1 |
| 38 | 32152-1 | Locknut | 6 |
| 39 | 3230-15 | Carriage Bolt | 2 |
| 40 | 12-2680 | Bar - Deflector | 1 |
| 41 | 32108-21 | Flat-Head Screw | 1 |
| 42 | 17-0960 | Bracket - Foot Guard | 1 |

# ENGINE TECUMSEH MODEL NO. V50-60205H
# 5 H.P. LAWN TRACTOR (Recoil) MODEL NO. V50-60203H
# 5 H.P. LAWN TRACTOR (Electric)

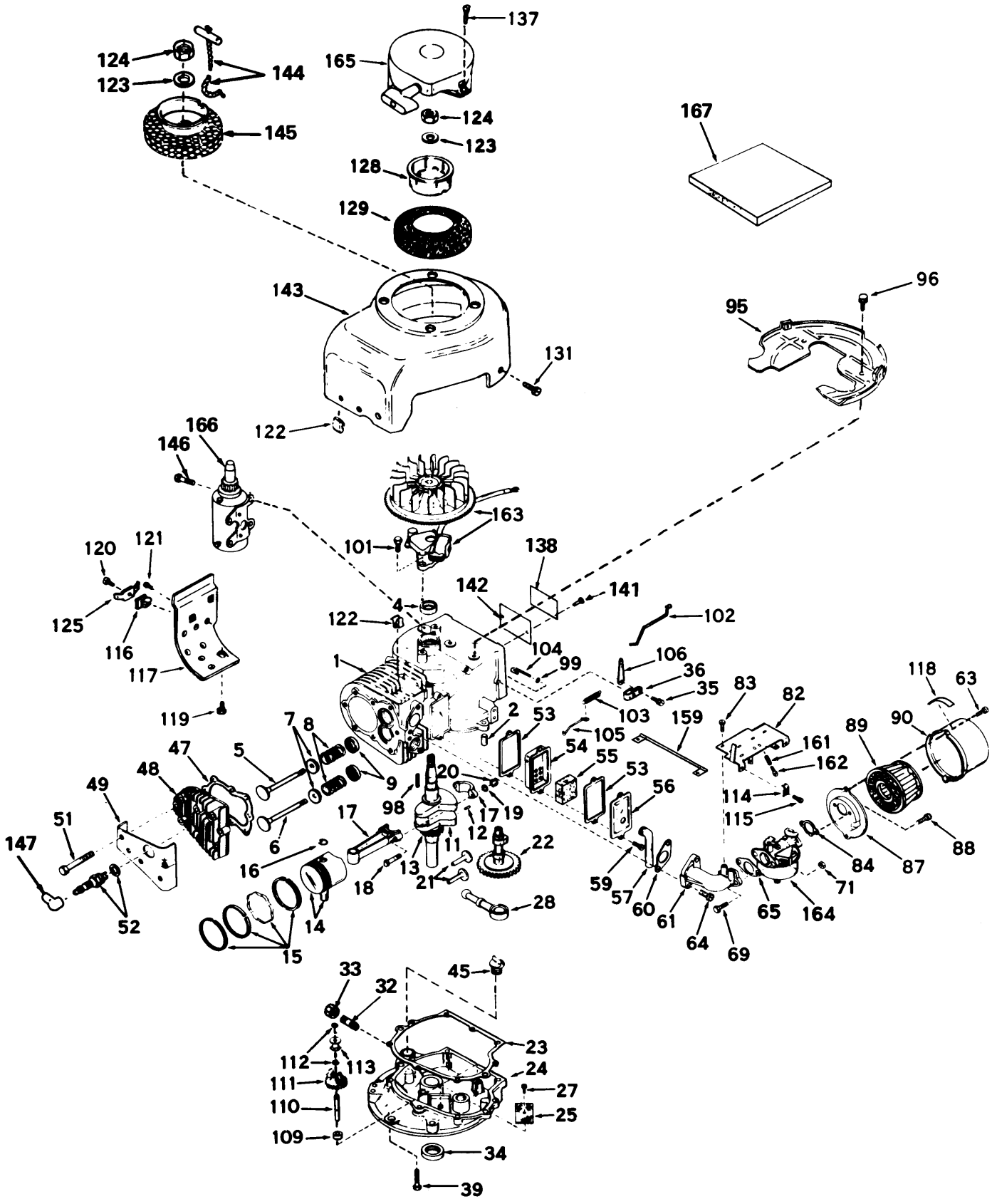

# ENGINE TECUMSEH MODEL NO. V50-60205H
# 5 H.P. LAWN TRACTOR (Recoil) MODEL NO. V50-60203H
# 5 H.P. LAWN TRACTOR (Electric) (Continued)

| Ref. No. | Part No. | Description | No. Used |
|---|---|---|---|
| 1 | 33361 | Cylinder Assy. (Incl. Nos 2 & 4) | 1 |
| 2 | 27652 | Pin, Dowel | 2 |
| 4 | 27876B | Seal, Oil | 1 |
| 5 | 27877A | Valve, Intake (Std.) (Incl. No. 9) | 1 |
| 5 | 27879A | Valve, Intake (1/32" Oversize) (Incl. No. 9) | 1 |
| 6 | 27878A | Valve, Exhaust (Std.) (Incl. No. 9) | 1 |
| 6 | 27880A | Valve, Exhaust (1/32" Oversize) (Incl. No. 9) | 1 |
| 7 | 27882 | Cap, Upper Valve Spring | 2 |
| 8 | 27881 | Spring, Valve | 2 |
| 9 | 32581 | Cap, Lower Valve Spring | 2 |
| 11 | 28257 | Crankshaft Assy. (Incl. Nos. 12 & 13) | 1 |
| 12 | 29783 | Pin, Crankshaft Gear | 1 |
| 13 | 27884 | Gear, Crankshaft | 1 |
| 14 | 33312 | Piston & Pin Assy. (Standard) (Incl. 2 Of No. 16) | 1 |
| 14 | 33313 | Piston & Pin Assy. (.010 Oversize) (Incl. 2 Of No. 16) | 1 |
| 14 | 33314 | Piston & Pin Assy. (.020 Oversize) (Incl. 2 of No. 16) | 1 |
| 15 | 33315 | Ring Set, Piston (Standard) | 1 |
| 15 | 33316 | Ring Set, Piston (.010 Oversize) | 1 |
| 15 | 33317 | Ring Set, Piston (.020 Oversize) | 1 |
| 16 | 27888 | Ring, Piston Pin Retaining | 2 |
| 17 | 31295B | Rod Assy., Connecting (Incl. Nos. 18, 19 & 20) | 1 |
| 18 | 21718 | Bolt, Connecting Rod | 2 |
| 19 | 26073 | Washer, Connecting Rod Bolt | 2 |
| 20 | 28264 | Nut, Hex | 2 |
| 21 | 27893 | Lifter, Valve | 2 |
| 22 | 33157 | Camshaft (Compression Release) | 1 |
| 23 | *30684 | Gasket, Mounting Flange | 1 |
| 24 | 31471B | Flange Assy., Mounting (Incl. Nos. 25, 27, 34, 45 & 110) | 1 |
| 25 | 31355 | Screen, Oil Filter | 1 |
| 27 | 29117 | Screw, Slotted Hex Hd. Self Tp. | 1 |
| 28 | 31356 | Pump Assy., Oil | 1 |
| 32 | 32213 | Nipple, Oil Drain | 1 |
| 33 | 30969 | Cap, Oil Drain | 1 |
| 34 | 27897 | Seal, Oil | 1 |
| 35 | 650548 | Screw, Hex Slotted Washer Hd. | 1 |
| 36 | 31335 | Clamp, Governor Lever | 1 |
| 39 | 650488 | Screw, Hex Hd. Sems | 7 |
| 45 | 27625 | Plug, Oil Filler | 1 |
| 47 | *28938B | Gasket, Cylinder Head | 1 |
| 48 | 30938A | Head, Cylinder | 1 |
| 49 | 30939A | Cover, Cylinder Head | 1 |
| 51 | 650697 | Screw, Hex Hd. Cap | 8 |
| 52 | 21943 | Plug, Spark (Champion J-8 Or Equiv.) | 1 |
| 53 | *27896 | Gasket, Valve Chamber Cover | 2 |
| 54 | 28423 | Body Assy., Breather | 1 |
| 55 | 28424 | Element, Breather | 1 |
| 56 | 28425 | Cover, Valve Chamber | 1 |
| 57 | 27627 | Tube, Breather | 1 |
| 59 | 650128 | Screw, Fil, Slotted Hd. Sems, | 2 |
| 60 | *27915 | Gasket, Intake Pipe | 1 |
| 61 | 31512 | Pipe, Intake | 1 |
| 63 | 650152 | Screw, Fil. Slotted Hd. Sems | 2 |
| 64 | 650378 | Screw, Fil. Hd Sems | 2 |
| 65 | *26756 | Gasket, Carburetor | 1 |
| 69 | 6201 | Screw, Hex Hd. Cap | 2 |
| 71 | 29752 | Nut, Hex | 2 |
| 82 | 32181 | Control Assy., Speed (Incl. Nos. 161 & 162) | 1 |
| 83 | 30200 | Screw, Slotted Hex Washer Hd. | 2 |
| 84 | *27272 | Gasket, Air Cleaner Bracket-To-Carburetor | 1 |
| 87 | 31691 | Bracket, Air Cleaner | 1 |
| 88 | 28820 | Screw, Phil Fil Hd. Mach. Sems | 2 |
| 89 | 30727 | Element, Air Cleaner | 1 |
| 90 | 31692 | Body, Air Cleaner | 1 |
| 95 | 29536 | Baffle, Blower Housing | 1 |
| 96 | 650561 | Screw, Phil Hex Hd. Sems | 2 |
| 98 | 30884 | Key, Flywheel | 1 |
| 99 | 28277 | Washer, Flat | 1 |
| 101 | 650489 | Screw, Hex Hd. Sems, W/Flatwasher | 2 |
| 102 | 31823 | Link, Governor | 1 |
| 103 | 31361 | Spring, Governor | 1 |
| 104 | 30669 | Rod, Governor (Incl. No. 99) | 1 |
| 105 | 32582 | Link, Governor Spring | 1 |
| 106 | 31357 | Lever, Governor | 1 |
| 109 | 31707 | Spacer | 1 |
| 110 | 30668 | Shaft, Mechanical Governor | 1 |
| 111 | 30591 | Gear Assy., Governor | 1 |

# ENGINE TECUMSEH MODEL NO. V50-60205H
# 5 H.P. LAWN TRACTOR (Recoil) MODEL NO. V50-60203H
# 5 H.P. LAWN TRACTOR (Electric) (Continued)

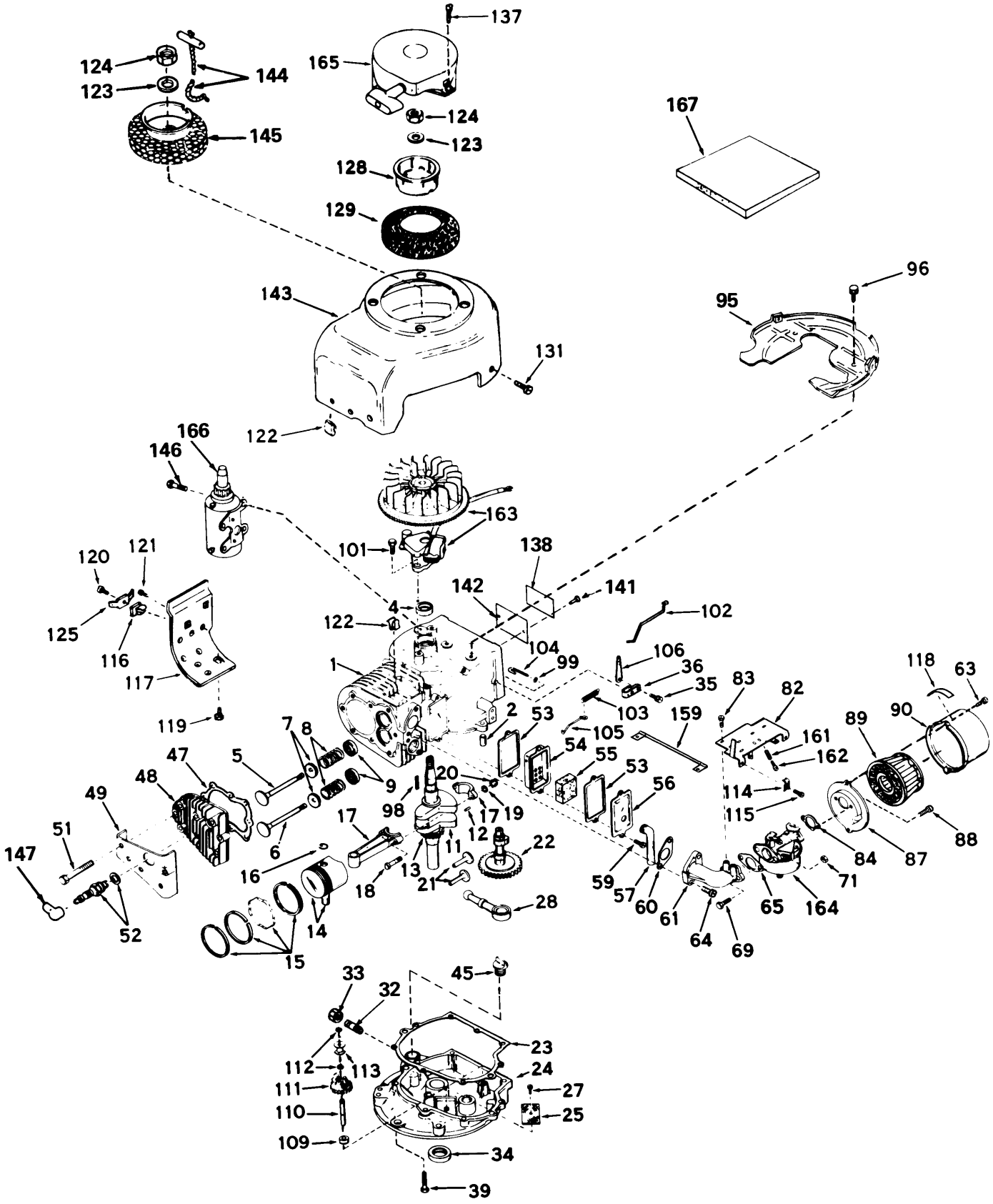

# ENGINE TECUMSEH MODEL NO. V50-60205H
# 5 H.P. LAWN TRACTOR (Recoil) MODEL NO. V50-60203H
# 5 H.P. LAWN TRACTOR (Electric) (Continued)

| Ref. No. | Part No. | Description | No. Used |
|---|---|---|---|
| 112 | 29193 | Ring, Retaining | 2 |
| 113 | 30588A | Spool, Governor | 1 |
| 114 | 27793 | Clip, Conduit | 1 |
| 115 | 28942 | Screw & Lockwasher, Slotted Hex Hd., Sems | 1 |
| 116 | 28545 | Grommet | 1 |
| 117 | 30622 | Extension, Blower Housing | 1 |
| 118 | 31752 | Decal, Air Cleaner | 1 |
| 119 | 650128 | Screw, Fil. Slotted Hd. Sems | 1 |
| 120 | 650643 | Screw, Phil Rd. Hd., Threadforming | 1 |
| 121 | 30688 | Screw, Hex Hd. Cap, Sems | 1 |
| 122 | 27275 | Clip, Hi-Tension Wire Retaining | 2 |
| 123 | 650490 | Washer, Belleville | 1 |
| 124 | 8116 | Nut, Hex | 1 |
| 125 | 33356 | Terminal, Ground | 1 |
| 128 | 32125 | Cup, Starter (Model V50-60205H Only) | 1 |
| 129 | 590417 | Screen, Starter Cup (Model V50-60205 Only) | 1 |
| 131 | 29747A | Screw, Hex Hd. Cap, Sems | 2 |
| 137 | 29716 | Screw, Pan Hd. P.C.R. W/Lockwasher (Model V50-60205H Only) | 4 |
| 138 | 31865 | Decal, Name & Instruction | 1 |

| Ref. No. | Part No. | Description | No. Used |
|---|---|---|---|
| 141 | 29309 | Stud, Drive | 2 |
| 142 | 31345 | Plate, Identification | 1 |
| 143 | 32223A | Housing, Blower | 1 |
| 144 | 590343 | Rope Assy., Starter (Model V50-60203H Only) | 1 |
| 145 | 28301 | Hub & Screen Assy., (Model V50-60203H Only) | 1 |
| 146 | 30688 | Screw, Hex Hd. Cap, Sems (Model V50-60203H Only) | 4 |
| 147 | 610118 | Cover, Spark Plug | 1 |
| 159 | 28468 | Wire, Ground | 1 |
| 161 | 31342 | Spring, Compression | 1 |
| 162 | 650549 | Screw, Speed Adj. Fil, Slotted Hd. | 1 |
| 163 | 610694A | Magneto (Model V50-60203H Only) | 1 |
| 163 | 610689A | Magneto (Model V50-60205H Only) | 1 |
| 164 | 631155 | Carburetor | 1 |
| 165 | 590420 | Starter, Rewind (Model V50-60205H Only) | 1 |
| 166 | 32468B | Motor, Electric Starter (Model V50-60203H Only) | 1 |
| 167 | 33234 | Gasket Set (Incl. Items Marked * ) | 1 |

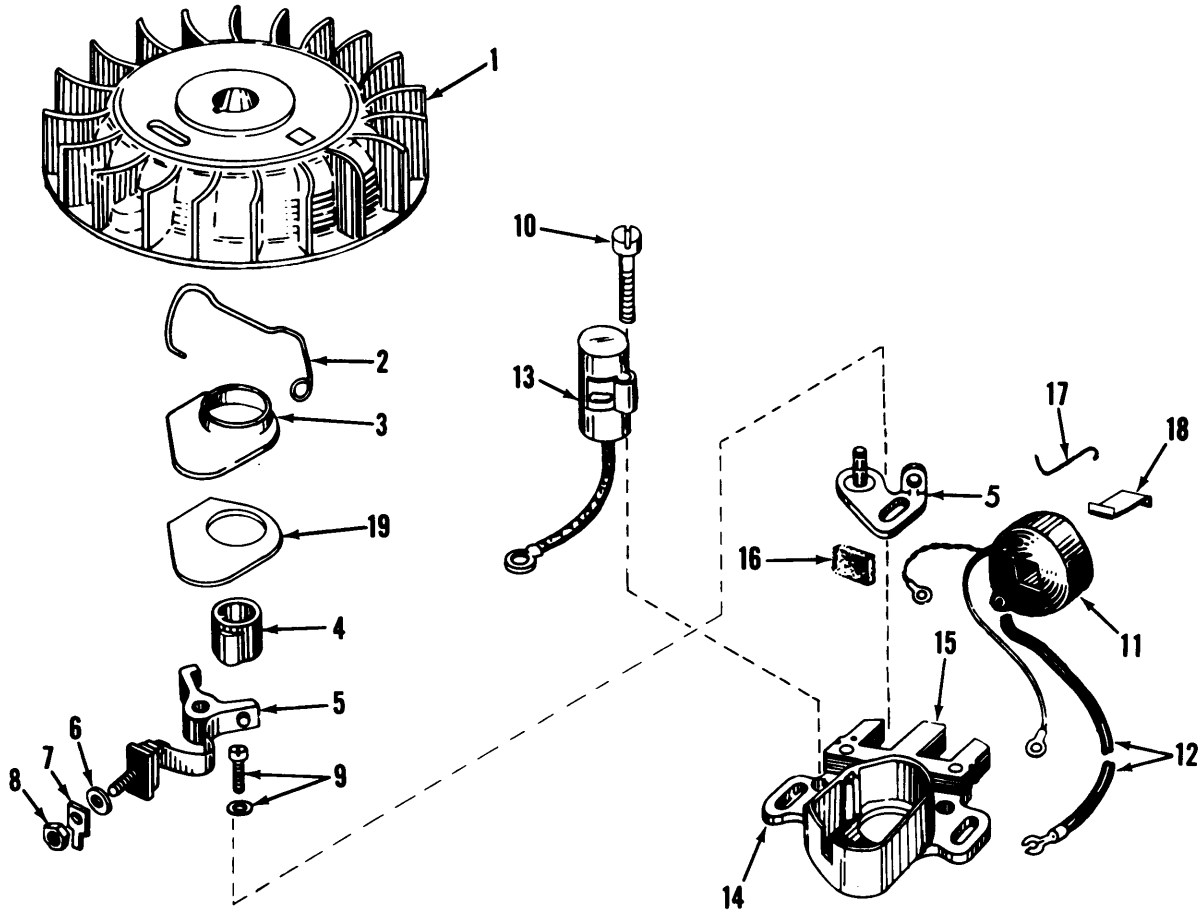


# MAGNETO (Recoil) 610689A

| Ref. No. | Part No. | Description | No. Used |
|---|---|---|---|
| 1 | 30555 | Flywheel | 1 |
| 2 | 30551 | Spring, Breaker Box | 1 |
| 3 | 30550 | Cover, Breaker Box Dust | 1 |
| 4 | 30992 | Cam, Breaker (Not Used On All Engines) | 1 |
| 5 | 30547A | Contact Assy., Breaker | 1 |
| 6 | 610385 | Washer, Terminal | 1 |
| 7 | 30843 | Tab, Ground Terminal | 1 |
| 8 | 610408 | Nut, Terminal | 1 |
| 9 | 29181 | Screw & Washer, Breaker | 1 |
| 10 | 610593 | Screw, Condenser Fastening | 1 |

| Ref. No. | Part No. | Description | No. Used |
|---|---|---|---|
| 11 | 30560A | Coil Assy. (Incl. #12) | 1 |
| 12 | 30554 | Wire, Lead | 1 |
| 13 | 30548A | Condenser | 1 |
| 14 | 30545 | Core & Plate | 1 |
| 15 | 30561A | Stator Assy. (Incl. Nos. 2, 3, 5 thru 14 & 16 thru 19) | 1 |
| 16 | 30549 | Felt, Cam Wiper | 1 |
| 17 | 31311 | Clip, Coil Locking | 1 |
| 18 | 29629 | Spring, Coil Wedge | 1 |
| 19 | 30883 | Gasket, Dust Cover | 1 |

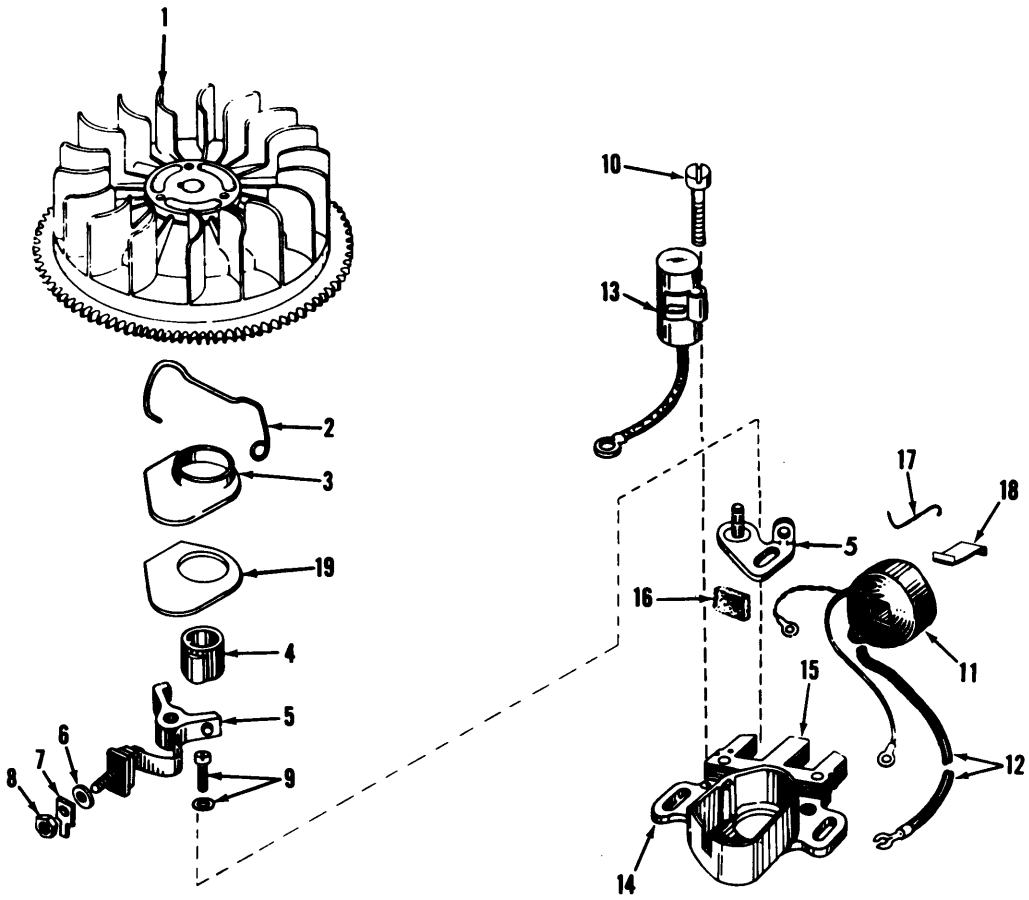


# MAGNETO (Electric) 610694A

| Ref. No. | Part No. | Description | No. Used |
|---|---|---|---|
| 1 | 30811 | Flywheel | 1 |
| 2 | 30551 | Spring, Breaker Box | 1 |
| 3 | 30550 | Cover, Breaker Box Dust | 1 |
| 4 | 30992 | Cam, Breaker | 1 |
| 5 | 30547A | Contact Assy., Breaker | 1 |
| 6 | 610385 | Washer, Terminal | 1 |
| 7 | 30843 | Tab, Ground Terminal | 1 |
| 8 | 610408 | Nut, Terminal | 1 |
| 9 | 29181 | Screw & Washer, Breaker | 1 |
| 10 | 610593 | Screw, Condenser Fastening | 1 |

| Ref. No. | Part No. | Description | No. Used |
|---|---|---|---|
| 11 | 30560A | Coil Assy., (Incl. No. 12) | 1 |
| 12 | 30554 | Wire, Lead | 1 |
| 13 | 30548A | Condenser | 1 |
| 14 | 30545 | Core & Plate | 1 |
| 15 | 30561A | Stator Assy., (Incl. Nos. 2, 3, 5 thru 14 & 16 thru 19) | 1 |
| 16 | 30549 | Felt, Cam Wiper | 1 |
| 17 | 31311 | Clip, Coil Locking | 1 |
| 18 | 29629 | Spring, Coil Wedge | 1 |
| 19 | 30883 | Gasket, Dust Cover | 1 |

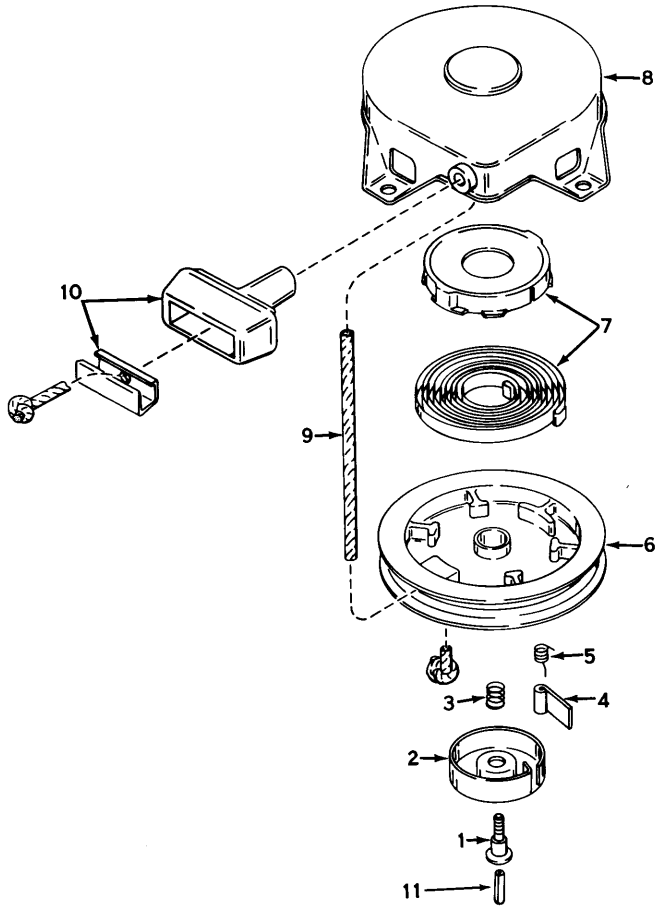


# REWIND STARTER NO. 590420

| Ref. No. | Part No. | Description | No. Used |
|---|---|---|---|
| 1 | 590409 | Screw, Retainer | 1 |
| 2 | 590410 | Retainer, R.H. | 1 |
| 3 | 590411 | Spring, Brake | 1 |
| 4 | 590148 | Dog, Starter | 1 |
| 5 | 590412 | Spring, R.H. Dog | 1 |
| 6 | 590413A | Pulley | 1 |

| Ref. No. | Part No. | Description | No. Used |
|---|---|---|---|
| 7 | 590414 | Spring & Keeper Assy. | 1 |
| 8 | 590415 | Housing Assy., Starter | 1 |
| 9 | 590386 | Rope, Starter | 1 |
| 10 | 590387 | Handle Assy., Starter | 1 |
| 11 | 590459 | Pin, Centering | 1 |

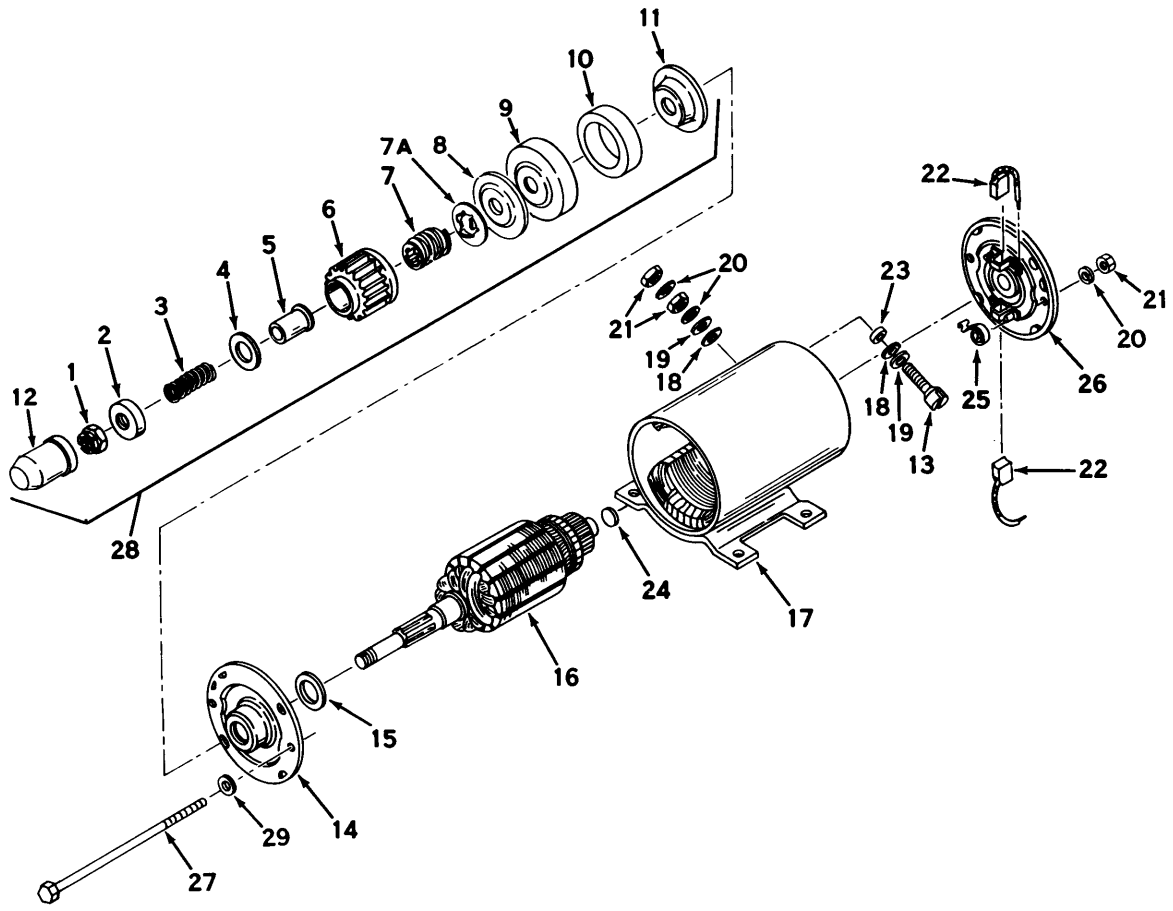


# ELECTRIC STARTER NO. 32468B

| Ref. No. | Part No. | Description | No. Used |
|---|---|---|---|
| 1 | 32483 | Nut, Hex | 1 |
| 2 | 32484 | Stop, Pinion | 1 |
| 3 | 33214 | Spring, Anti-drift | 1 |
| 4 | 32486 | Washer, Pinion | 1 |
| 5 | 32487 | Sleeve, Anti-drift | 1 |
| 6 | 33215 | Gear, Pinion | 1 |
| 7 | 33216 | Shaft, Screw | 1 |
| 7A | 33225 | Stopper, Screw | 1 |
| 8 | 33217 | Washer, Thrust | 1 |
| 9 | 33218 | Cap, Cushion | 1 |
| 10 | 33219 | Cushion, Rubber | 1 |
| 11 | 32493 | Washer, Thrust | 1 |
| 12 | 33220 | Cap | 1 |
| 13 | 32499 | Bolt, Terminal | 1 |
| 14 | 32494 | Cap Assy., Drive End (Incl. Bearing) | 1 |
| 15 | 32495 | Washer, Spacing (.024 thick) | 2 |
| 15 | 32496 | Washer, Spacing (.008 thick) | 2 |

| Ref. No. | Part No. | Description | No. Used |
|---|---|---|---|
| 16 | 32497 | Armature | 1 |
| 17 | 32843 | Housing Assy. (Incl. pole shoes, field coils, terminal post, straight mounting bracket, Nos. 13 & 18 thru 23) | 1 |
| 18 | 32500 | Washer, Insulating | 2 |
| 19 | 650168 | Washer, Plain | 1 |
| 20 | 650131 | Washer, Lock | 4 |
| 21 | 28710 | Nut, Hex | 4 |
| 22 | 32838 | Brush & Spring Kit | 1 |
| 23 | 32501 | Bushing, Insulating | 1 |
| 24 | 32509 | Washer, Spacing | 1 |
| 25 | 32837 | Spring, Brush | 2 |
| 26 | 33226 | End Cap Assy., Commutator | 1 |
| 27 | 32508 | Bolt, Thru | 2 |
| 28 | 32481A | Drive Assy., Complete (Incl. Nos. 1 thru 12) | 1 |
| 29 | 31481 | Washer | 2 |

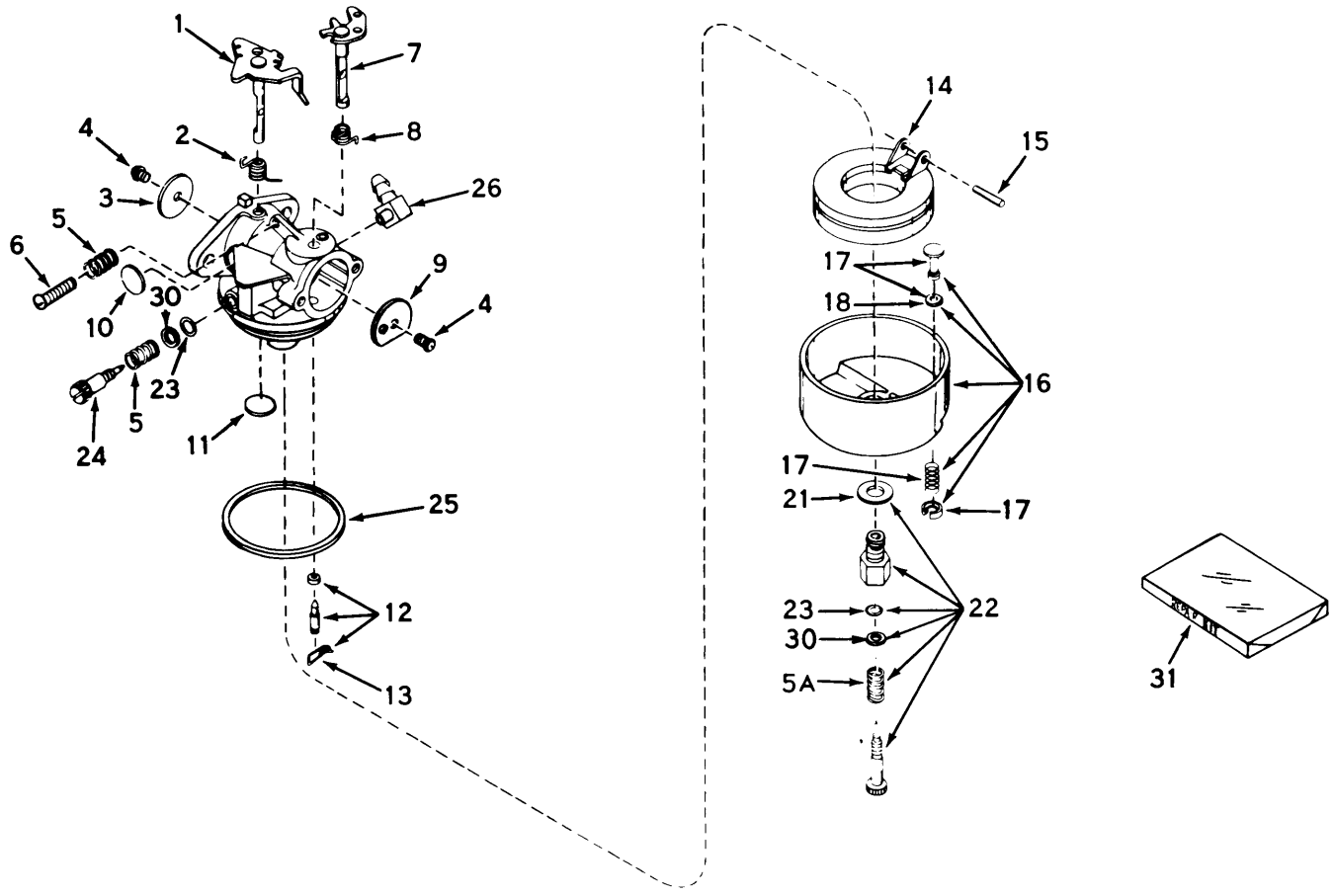


# CARBURETOR NO. 631155 (Recoil and Electric)

| Ref. No. | Part No. | Description | No. Used |
|---|---|---|---|
| 1 | 31834 | Shaft & Lever Assy., Throttle | 1 |
| 2 | 630731 | Spring, Throttle Return | 1 |
| 3 | 631036 | Shutter, Throttle | 1 |
| 4 | 650506 | Screw, Rd. Hd. | 2 |
| 5 | 630766 | Spring, Idle Regulating Screw | 2 |
| 5A | 630738 | Spring, Main Adj. Screw | 1 |
| 6 | 650417 | Screw, Idle Regulating | 1 |
| 7 | 630973 | Shaft & Lever Assy., Choke | 1 |
| 8 | 630821 | Spring, Choke Return | 1 |
| 9 | 631037 | Shutter, Choke | 1 |
| 10 | 630748 | Plug, Welch | 1 |
| 11 | 631027 | Plug, Welch | 1 |
| 12 | *631021 | Inlet Needle, Seat & Clip Assy. (Incl. #13) | 1 |
| 13 | 631022 | Clip, Inlet Needle | 1 |
| 14 | 631023 | Float, Carburetor | 1 |

| Ref. No. | Part No. | Description | No. Used |
|---|---|---|---|
| 15 | *631024 | Shaft, Float | 1 |
| 16 | 631025 | Bowl & Drain Assy., Float (Incl. #17) | 1 |
| 17 | 27136A | Plunger Assy., Drain (Incl. #18) | 1 |
| 18 | *27554 | Gasket, Drain Plunger | 1 |
| 21 | 27110 | Gasket, Bowl-To-Body | 1 |
| 22 | *631026 | Adj. Screw Assy., Main (Incl. Nos. 5A,21,23&30) | 1 |
| 23 | *630740 | "O" Ring, Adj. Screw | 2 |
| 24 | *631078 | Screw, Idle Adj. | 1 |
| 25 | *631028 | Gasket, Bowl-To-Body | 1 |
| 26 | 631038 | Fitting, Fuel Inlet | 1 |
| 30 | 630739 | Washer, Flat | 2 |
| 31 | 631029 | Repair Kit (Incl. Items Marked*) | 1 |

# PRODUCT CHANGES

In an effort to make improvements available to TORO owners as quickly as possible, minor changes are incorporated into Toro's products from time to time that do not become immediately shown in the Parts Catalog. If such a change apparently has been made in your unit, which is not reflected in your manual, see your TORO distributor or his Authorized TORO Service Dealer for information and part numbers.

# IMPORTANT ORDERING INSTRUCTIONS

Repair parts are available from your Authorized TORO Service Dealer. To insure getting correct parts without delay, furnish the following information:

1. Serial number of your tractor as shown on the name plate.
2. Part number, description, and quantity of each part required.
3. State whether parts should be shipped by mail or express. All repair parts are shipped F.O.B. Factory.
4. Name and address where parts are to be shipped.
5. Do not order by reference number; use part number only.

# THE TORO PROMISE

It is Toro's policy to design and produce TORO products to provide our customers with a high level of performance and durability in normal operation. Our products, however, are produced in high volume, and it is inevitable that occasionally a unit will reach a customer with a defect in materials or workmanship which causes that unit to fall below the normal high level of TORO performance. Invariably, such a defect will be noticed in a residential product within one year, and in an institutional product within ninety days after purchase. Recognizing this possibility, Toro has established a simple guarantee policy and procedure that is intended to assure customer satisfaction. This guarantee statement is as follows:

## The Toro Promise

*The Toro Company promises to repair any TORO product for the original purchaser if defective in materials or workmanship. The following time periods from the date of purchase apply:*

| | |
|---|---|
| Residential products | 1 year |
| Residential products used commercially | 45 days |
| Institutional products | 90 days |

*The costs of parts and labor are included, but the customer pays the transportation costs. Just return any residential product to an Authorized TORO Service Dealer, or any institutional product to a TORO distributor.*

Should you feel that a product is defective, and wish to rely on The Toro Promise, the following procedure is recommended:

1. Contact any TORO dealer or distributor, but preferably the dealer or distributor from whom you purchased the product.
2. He will instruct you to either return the product to him, or tell you the name and address of your nearest Authorized TORO Service Dealer if the product is to be returned to such dealer.
3. Take the product and your original sales slip, or other evidence of purchase date, to the servicing dealer.
4. The servicing dealer will inspect the unit, advise you whether the product is defective and, if so, make all repairs necessary to correct the defect without extra charge to you.

If for any reason you are dissatisfied with the dealer's analysis of the defect or the service he performs, we urge you to contact us. Write:

TORO "Customer Care" Department
8111 Lyndale Avenue South
Bloomington, Minnesota 55420

# MAINTENANCE RECORD

| Date | Hours Used | Oil Change | Air Cleaner Service | Lubrication | Winter Storage | Spring Service | Spark Plug Gap |
|---|---|---|---|---|---|---|---|
| | | | | | | | |
| | | | | | | | |
| | | | | | | | |