Form No. 3439-524 Rev A

Power TRX™ Commercial 1428 OHXE and 1432 OHXE Snowthrower

Model No. 38890—Serial No. 400000000 and Up

Model No. 38891—Serial No. 400000000 and Up

Operator's Manual

Introduction

This machine is intended to be used by residential homeowners and professional, hired operators. It is designed primarily for removing snow from paved surfaces, such as driveways and sidewalks, and other surfaces for traffic on residential or commercial properties. It is not designed for removing materials other than snow. Using this product for purposes other than its intended use could prove dangerous to you and bystanders.

Read this information carefully to learn how to operate and maintain your product properly and to avoid injury and product damage. You are responsible for operating the product properly and safely.

Visit www.Toro.com for product safety and operation training materials, accessory information, help finding a dealer, or to register your product.

Whenever you need service, genuine Toro parts, or additional information, contact an Authorized Service Dealer or Toro Customer Service and have the model and serial numbers of your product ready. Figure 1 identifies the location of the model and serial numbers on the product. Write the numbers in the space provided.

Important: **With your mobile device, you can scan the QR code on the serial number decal (if equipped) to access warranty, parts, and other product information.**

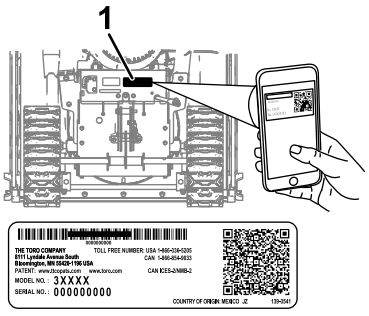

g323172

Figure 1

1. Model and serial number location

Model No. _____

Serial No. _____

This manual identifies potential hazards and has safety messages identified by the safety-alert symbol (Figure 2), which signals a hazard that may cause serious injury or death if you do not follow the recommended precautions.



g000502

Figure 2

Safety-alert symbol

This manual uses 2 words to highlight information. **Important** calls attention to special mechanical information and **Note** emphasizes general information worthy of special attention.

This product complies with all relevant European directives; for details, please see the separate product specific Declaration of Conformity (DOC) sheet.

Important: **If you are using this machine above 1500 m (5,000 ft) for a continuous period, ensure that the High Altitude Kit has been installed so that the engine meets CARB/EPA emission regulations. The High Altitude Kit increases engine performance while preventing spark-plug fouling, hard starting, and increased emissions. Once you have installed the kit, attach the high-altitude label next to the serial decal on the machine. Contact any Authorized Toro Service Dealer to obtain the proper High Altitude Kit and high-altitude label for your machine. To locate a dealer convenient to you, access our website at www.Toro.com or contact our Toro Customer Care Department at the number(s) listed in your Emission Control Warranty Statement. Remove the kit from the engine and restore the engine to its original factory configuration when running the engine under 1500 m (5,000 ft). Do not operate an engine that has been converted for high-altitude**

© 2020—The Toro® Company
8111 Lyndale Avenue South
Bloomington, MN 55420

Register at www.Toro.com.

Original Instructions (EN)
Printed in the USA
All Rights Reserved

3439-524 A

use at lower altitudes; otherwise, you could overheat and damage the engine.

If you are unsure whether or not your machine has been converted for high-altitude use, look for the following label (Figure 3).

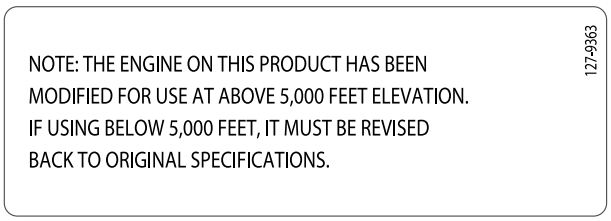

Figure 3

⚠ WARNING

CALIFORNIA
Proposition 65 Warning

The engine exhaust from this product contains chemicals known to the State of California to cause cancer, birth defects, or other reproductive harm.

Use of this product may cause exposure to chemicals known to the State of California to cause cancer, birth defects, or other reproductive harm.

Contents

Introduction 1
Safety 2
General Safety 2
Safety and Instructional Decals 3
Setup 5
1 Checking the Engine-Oil Level 5
2 Checking the Skids and Scraper 5
3 Checking the Operation of the Traction Drive 5
4 Extending the Drift Breakers 6
Product Overview 7
Specifications 7
Attachments/Accessories 7
Operation 8
Before Operation 8
Before Operation Safety 8
Filling the Fuel Tank 8
During Operation 8
During Operation Safety 8
Starting the Engine 9
Shutting Off the Engine 11
Operating the Handwarmers 11
Operating the Auger-Height Lever 11
Operating the Traction Drive 12
Using the Wheel-Clutch Levers 12
Operating the Speed Selector 12
Operating the Auger/Impeller Drive 13
Operating the Quick Stick® 13
Clearing a Clogged Discharge Chute 13
Operating Tips 14
After Operation 14
After Operation Safety 14
Preventing Freeze-up after Use 14
Maintenance 15
Recommended Maintenance Schedule(s) 15
Maintenance Safety 15
Preparing for Maintenance 15
Checking the Engine-Oil Level 16
Checking and Adjusting the Auger Skids and Scraper 16
Checking and Adjusting the Track Skids 17
Checking and Adjusting the Track Tension 17
Checking and Adjusting the Traction Cable 18
Checking and Adjusting the Auger/Impeller Cable 19
Checking the Auger-Gearbox-Oil Level 19
Changing the Engine Oil 20
Replacing the Spark Plug 21
Replacing the Drive Belts 21
Replacing the Headlight 22
Storage 22
Storage Safety 22
Storing the Machine 22
Removing the Machine from Storage 23
Troubleshooting 24

Safety

This machine has been designed in accordance with ANSI/OPEI B71.3 specifications.

General Safety

This product is capable of amputating hands and feet and of throwing objects. Always follow all safety instructions to avoid serious personal injury.

- Read and understand the contents of this *Operator's Manual* before you start the engine. Ensure that everyone using this product knows how to use it, knows how to shut off the engine quickly, and understands the warnings.
- Shut off the engine whenever you leave the operating position for any reason.
- Do not put your hands or feet near moving parts on the machine.

- Do not operate the machine without all guards and other safety protective devices in place and working.
- Keep clear of any discharge opening. Keep bystanders, especially small children, out of the operating area.
- Never allow children to operate the machine.

Safety and Instructional Decals

Safety decals and instructions are easily visible to the operator and are located near any area of potential danger. Replace any decal that is damaged or missing.

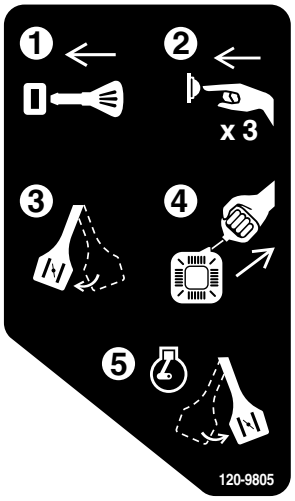

decal120-9805

120-9805

1. Insert the key.
2. Prime the engine 3 times.
3. Engage the choke.
4. Pull the starter cord.
5. Once the engine is running, disengage the choke.



decal121-6817

121-6817

1. Cutting/dismemberment hazard of hand or foot, impeller and auger—keep bystanders away.

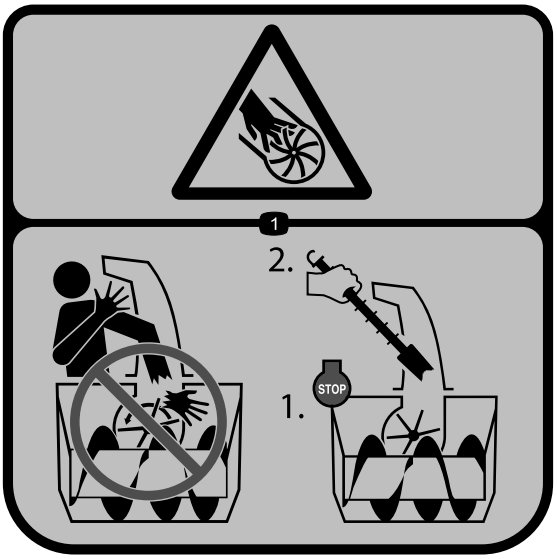

decal121-6847

121-6847

1. Cutting/dismemberment hazard of the fingers or hand, impeller—do not place your hand in the chute; shut off the engine before using the tool to clear the chute.



decal131-6487

131-6487

1. Engine—shut off
2. Slow
3. Fast



decal133-8061

133-8061

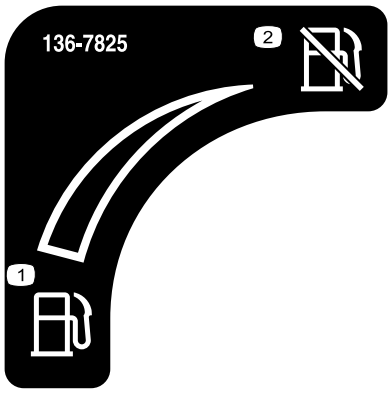

decal136-7825

136-7825

1. Fuel
2. Fuel shutoff



decal138-0650

138-0650

1. Squeeze the lower lever to turn left.
2. Squeeze the upper lever to engage the traction drive.
3. Warning—read the *Operator's Manual*.
4. Cutting/dismemberment of fingers or hand, impeller blade—do not place your hand in the chute; shut off the engine before using the tool to clear the chute.
5. Cutting/dismemberment of fingers or hand, impeller blade—keep away from moving parts; keep all guards and shields in place; remove the key from the ignition before servicing the machine.
6. Thrown object hazard—keep bystanders away.
7. Squeeze the upper lever to engage the impeller.
8. Squeeze the lower lever to turn right.

Setup

1

Checking the Engine-Oil Level

No Parts Required

Procedure

Note: Your machine comes with oil in the engine crankcase. Before starting the engine, check the oil level and add oil if necessary.

Refer to Checking the Engine-Oil Level (page 16).

2

Checking the Skids and Scraper

No Parts Required

Procedure

Refer to Checking and Adjusting the Auger Skids and Scraper (page 16).

3

Checking the Operation of the Traction Drive

No Parts Required

Procedure

⚠ CAUTION

If the traction drive is not properly adjusted, the machine may move in the direction opposite of what you intended, causing injury and/or property damage.

Carefully check the traction drive and adjust it properly, if necessary.

1. Start the engine; refer to Starting the Engine (page 9).
2. Pull the speed selector slightly out of the neutral position; refer to Operating the Speed Selector (page 12).
3. Squeeze the left (traction) lever to the handgrip (Figure 4).

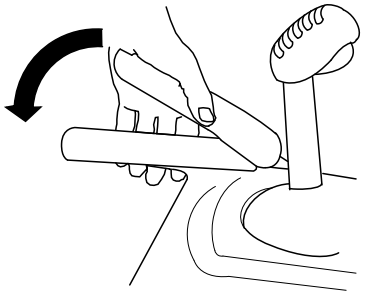

g322974

Figure 4

The machine should move rearward. If the machine does not move or moves forward, complete the following:

A. Release the traction lever and shut off the engine.

B. Loosen the 2 nuts on the speed cable resting on the speed-selector-lever bracket, located under the control panel (Figure 5).

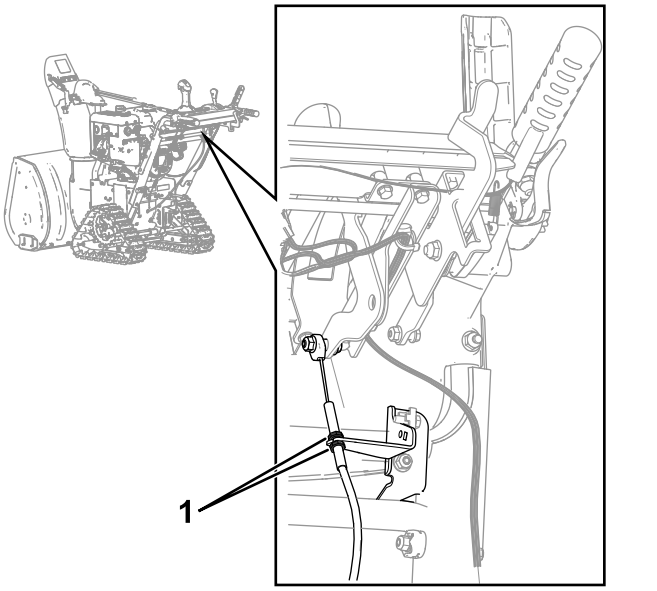

Figure 5

1. Nuts on the speed cable

C. Pull the cable downward.

D. Tighten the 2 nuts.

4. Release the traction lever.

5. Push the speed selector slightly out of the neutral position; refer to Operating the Speed Selector (page 12).

6. Squeeze the left (traction) lever to the handgrip (Figure 4).

   The machine should move forward. If the machine does not move or moves rearward, complete the following:

   A. Release the traction lever and shut off the engine.

   B. Loosen the 2 nuts on the speed cable resting on the speed-selector-lever bracket, located under the control panel (Figure 5).

   C. Push the cable upward.

   D. Tighten the 2 nuts.

7. If you made any adjustments, repeat this procedure until no adjustments are required.

Important: **If the machine moves when the traction lever is in the released position, check the traction cable; refer to Checking and Adjusting the Traction Cable (page 18) or take the machine to an Authorized Service Dealer for service.**

4

Extending the Drift Breakers

No Parts Required

Procedure

Extend the drift breakers as needed.

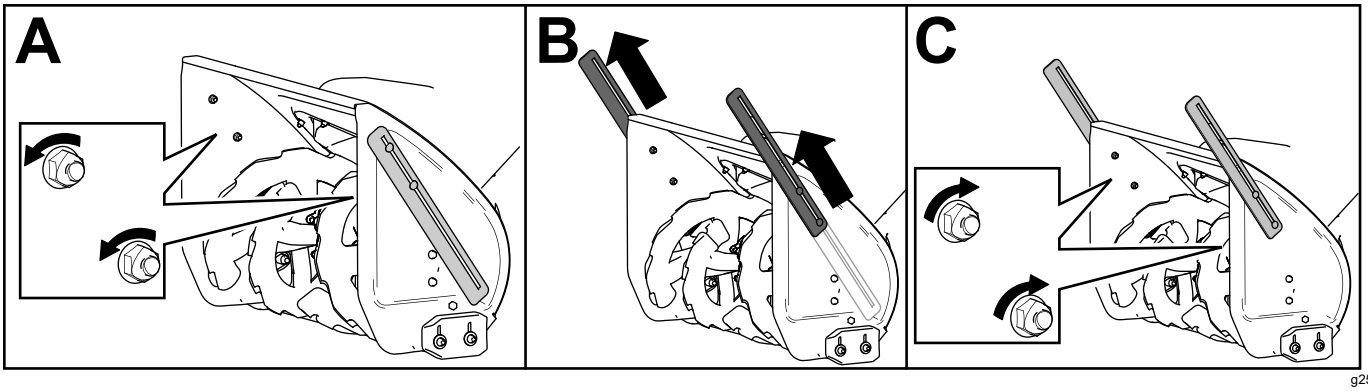

Product Overview

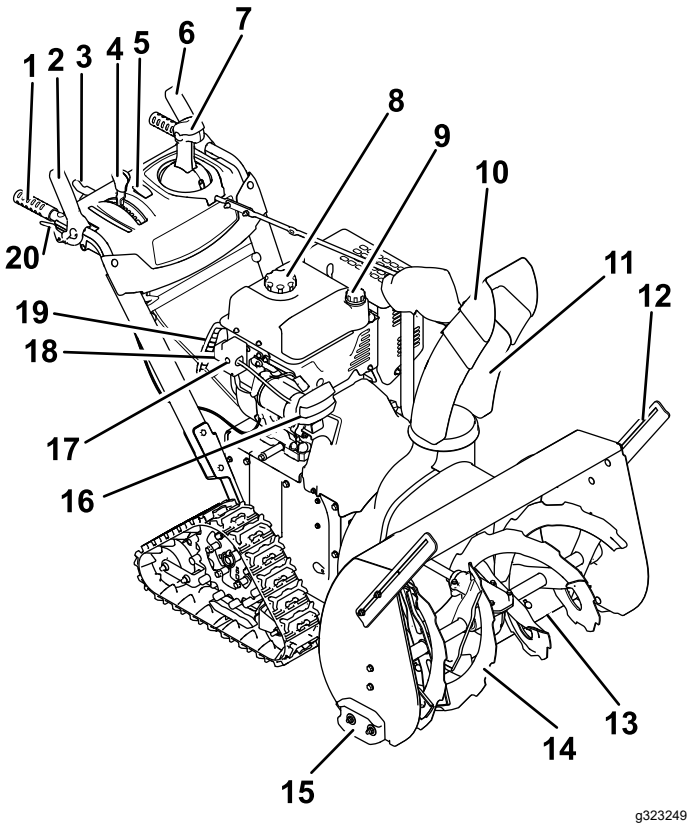

Figure 7

1. Handgrip (2)
2. Auger/impeller lever
3. Auger-height lever
4. Speed-selector lever
5. Handwarmer switch
6. Traction lever
7. Quick Stick® discharge-chute control
8. Fuel-tank cap
9. Oil-fill tube/dipstick
10. Chute deflector
11. Discharge chute
12. Drift breaker (2)
13. Scraper
14. Auger
15. Skid (2)
16. Headlight
17. Electric-start button
18. Electric-start plug-in
19. Recoil-start handle
20. Wheel-clutch lever (2)

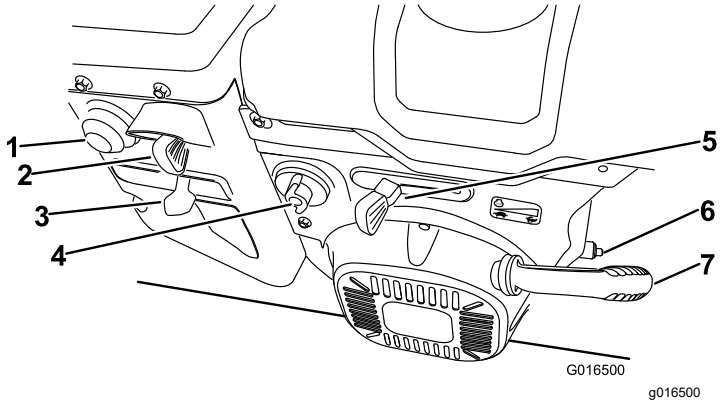

Figure 8

1. Primer
2. Key
3. Choke
4. Fuel-shutoff valve
5. Throttle
6. Oil-drain plug
7. Recoil-start handle

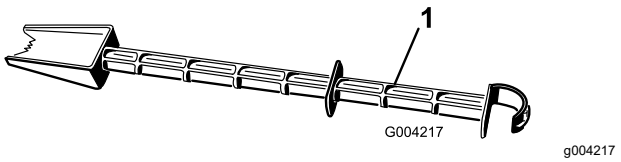

Figure 9

1. Snow-cleanout tool (attached to the handle)

Specifications

Model	Weight	Length	Width	Height
38890	138 kg (304 lb)	160 cm (63 inches)	74 cm (29 inches)	114 cm (45 inches)
38891	141 kg (311 lb)		84 cm (33 inches)	

Attachments/Accessories

A selection of Toro approved attachments and accessories is available for use with the machine to enhance and expand its capabilities. Contact your Authorized Service Dealer or authorized Toro distributor or go to www.Toro.com for a list of all approved attachments and accessories.

To ensure optimum performance and continued safety certification of the machine, use only genuine Toro replacement parts and accessories. Replacement parts and accessories made by other manufacturers could be dangerous, and such use could void the product warranty.

Operation

Note: Determine the left and right sides of the machine from the normal operating position.

Before Operation

Before Operation Safety

General Safety

- **For electric-start models only:** Use extension cords and receptacles as specified in the manual. Inspect the electrical cord before plugging it into a power source. If the cord is damaged, replace it. Unplug the power cord whenever you are not starting the machine.
- Wear appropriate clothing, including eye protection; long pants; substantial, slip-resistant footwear; and hearing protection. Tie back long hair, secure loose clothing, and do not wear loose jewelry.
- Thoroughly inspect the area where you will use the machine, and remove all doormats, sleds, boards, wires, and other foreign objects.
- If a shield, safety device, or decal is damaged, illegible, or missing, repair or replace it before beginning operation. Also, tighten any loose fasteners.
- Adjust the collector housing height to clear a gravel or crushed-rock surface.

Fuel Safety

Fuel is extremely flammable and explosive. A fire or explosion from fuel can burn you and others.

- To prevent a static charge from igniting the fuel, place the container and/or machine on the ground before filling, not in a vehicle or on an object.
- Fill the fuel tank outdoors when the engine is cold. Replace the fuel cap securely and wipe up spills.
- Do not handle fuel when smoking or around an open flame or sparks.
- Store fuel in an approved fuel container, out of the reach of children.
- When fuel is in the tank, tip the machine only as directed in the instructions.
- If you spill fuel on your clothing, change your clothing immediately.

Filling the Fuel Tank

Type	Unleaded gasoline
Minimum octane rating	87 (US) or 91 (research octane; outside the US)
Ethanol	No more than 10% by volume
Methanol	None
MTBE (methyl tertiary butyl ether)	Less than 15% by volume
Oil	Do not add to the fuel

Use only clean, fresh (no more than 30 days old), fuel from a reputable source.

Fill the fuel tank as shown in Figure 10; do not fill above the bottom of the fuel tank neck.

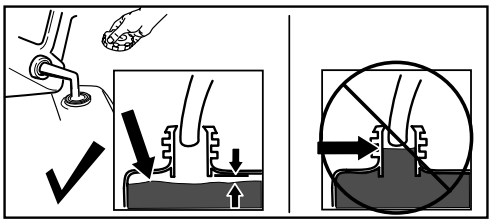

g216203

Figure 10

Important: **For best results, purchase only the quantity of fuel that you expect to use in 30 days. Otherwise, add fuel stabilizer/conditioner to fresh fuel as directed by the fuel-stabilizer/conditioner manufacturer.**

During Operation

During Operation Safety

General Safety

- **Shut off the engine before unclogging the machine and always use a stick or the snow-cleanout tool (if provided).**
- Stay behind the handles and away from the discharge opening while operating the machine. **Keep your face, hands, feet, and any other part of your body or clothing away from moving or rotating parts.**
- Never direct the discharge toward people or areas where property damage can occur.
- Use your full attention while operating the machine. Do not engage in any activity that causes distractions; otherwise, injury or property damage may occur.
- Exercise caution to avoid slipping or falling, especially when operating the machine in reverse.

- Always be sure of your footing, and keep a firm hold on the handles. Walk; never run.
- Exercise extreme caution when operating the machine on a slope.
- Do not operate the machine without good visibility or light.
- Look behind and use care when backing up the machine.
- When not actively clearing snow, disengage power to the auger.
- Exercise extreme caution when operating the machine on or crossing gravel drives, walks, or roads. Stay alert for hidden hazards or traffic.
- Never attempt to make any adjustments while the engine is running, except as directed in the instructions.
- After striking a foreign object, shut off the engine, remove the key, and inspect the machine for damage. Repair any damage before starting the machine.
- If the machine starts to vibrate abnormally, shut off the engine and check immediately for the cause.
- Do not run the engine indoors; exhaust fumes are dangerous.
- Do not overload the machine capacity by attempting to clear snow at too fast a rate.
- Disengage all clutches and shift into neutral before starting the engine.
- Shut off the engine whenever you leave the operating position, before clearing or unclogging the collector, impeller, or discharge chute, and when making any repairs, adjustments, or inspections.
- Never operate the machine at high transport speeds on slippery surfaces.

Starting the Engine

Using Electric Start

Note: To use the electric starter (electric-start models only), connect a power cord to the plug-in first and then to a power outlet. Use only a UL-listed, 16-gauge extension cord recommended for outdoor use that is not longer than 15 m (50 ft).

⚠ WARNING

The electrical cord can become damaged, causing a shock or fire.

Thoroughly inspect the electrical cord before using the machine. If the cord is damaged, do not use it. Replace or repair the damaged cord immediately. Contact an Authorized Service Dealer for assistance.

⚠ CAUTION

If you leave the machine plugged into a power outlet, someone can inadvertently start the machine and injure people or damage property.

Unplug the power cord whenever you are not starting the machine.

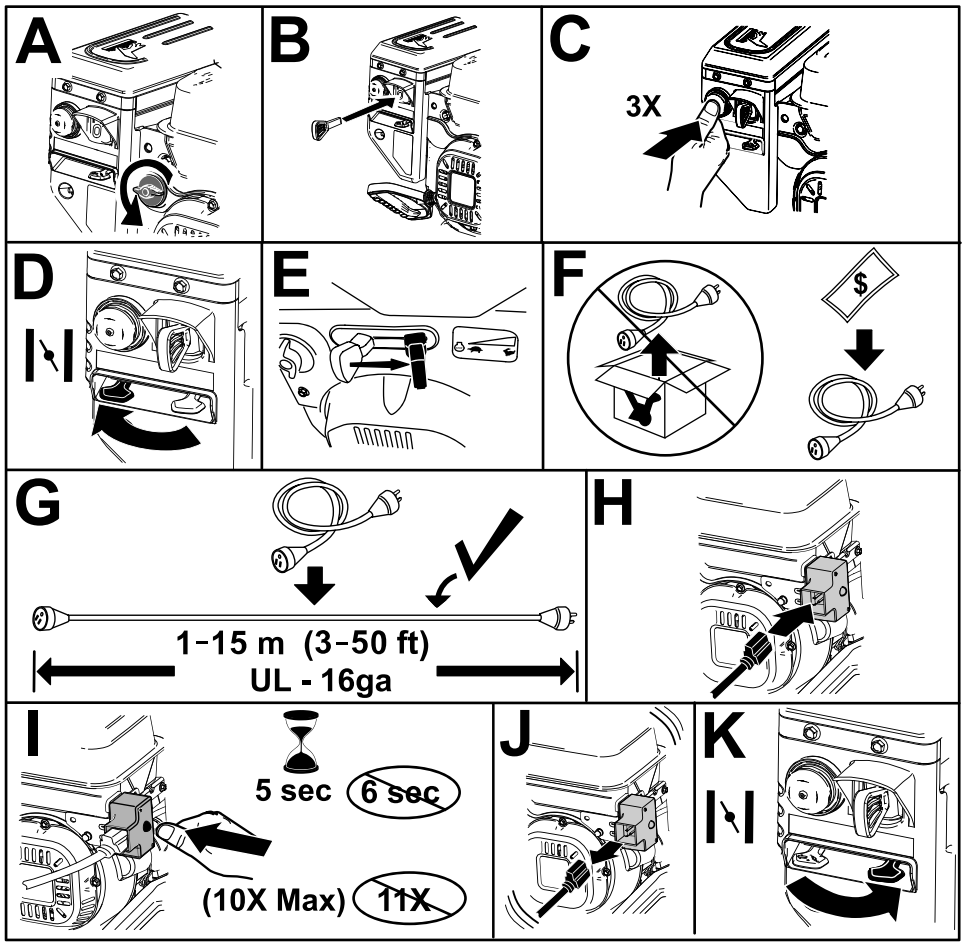

g323193

Figure 11

Using Recoil Start

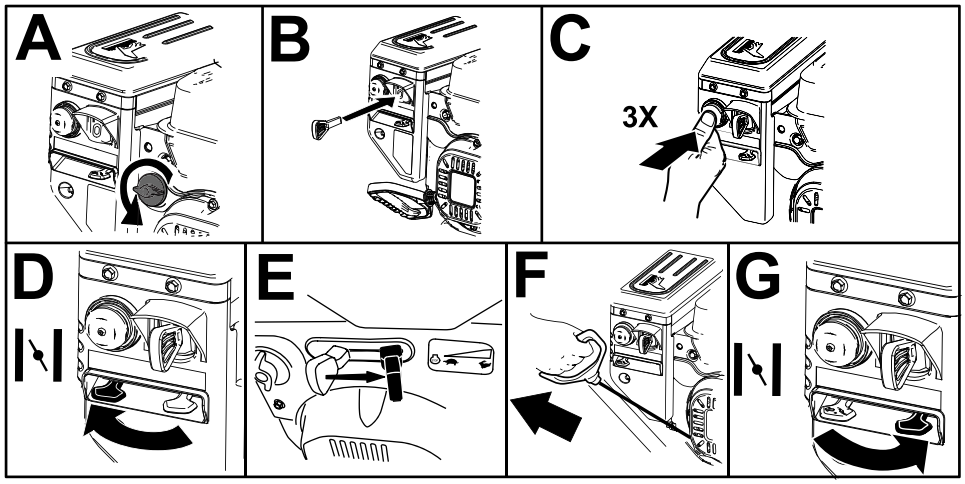

g260415

Figure 12

Shutting Off the Engine

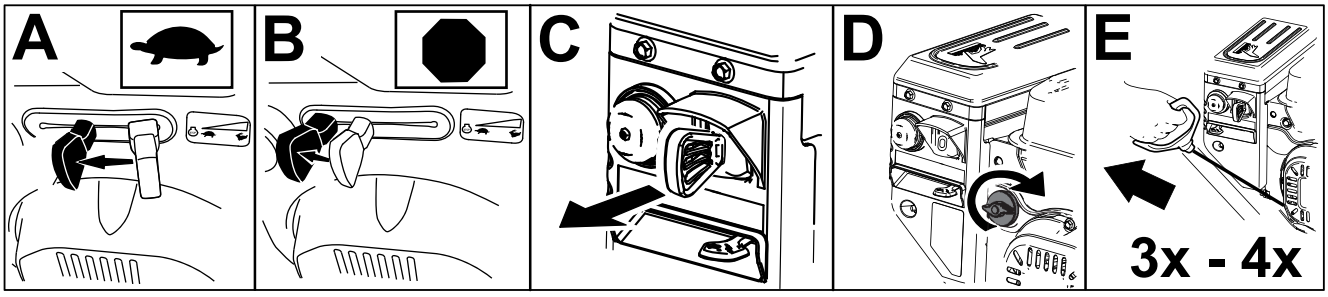

g252411

Figure 13

Operating the Handwarmers

Operate the handwarmers as follows:

- Press the switch to the ON position to turn on the handwarmers.
- Press the switch to the OFF position to turn off the handwarmers.

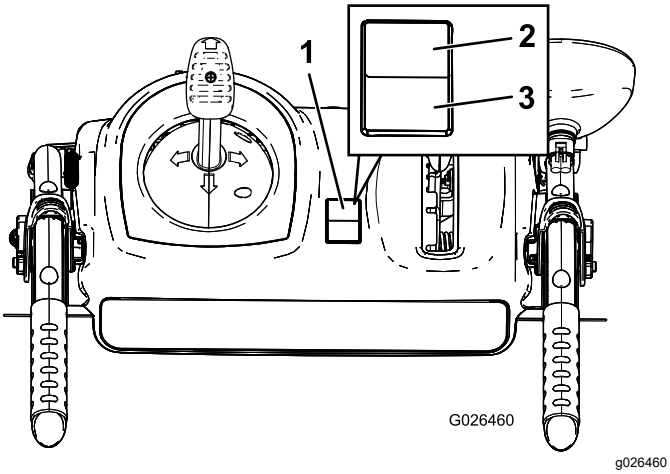

g026460

Figure 14

1. On/Off switch
2. ON position
3. OFF position

Operating the Auger-Height Lever

Use the auger-height lever to adjust the height of the auger housing.

Press the auger-height lever down while moving the handles up or down as needed to obtain the desired auger height position.

Release the lever to lock the auger in the desired height position.

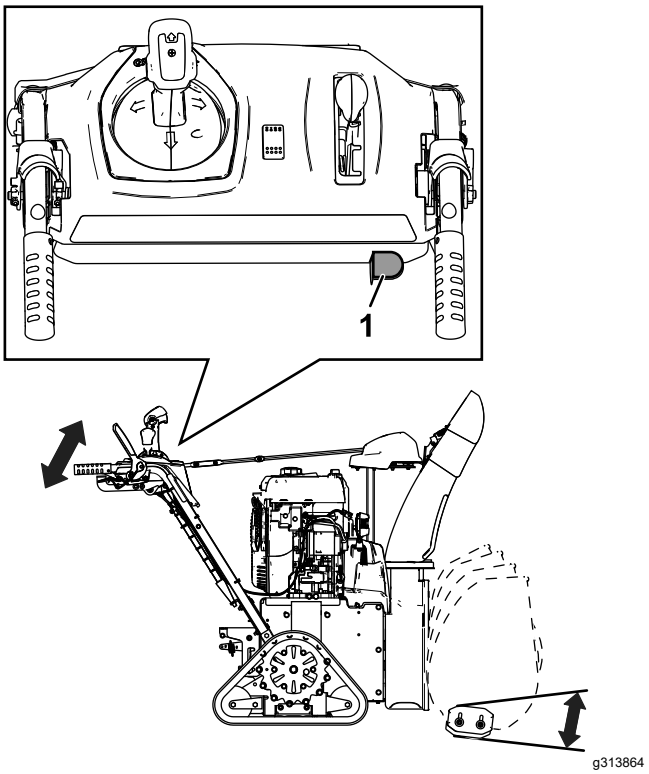

g313864

Figure 15

1. Auger-height lever

Operating the Traction Drive

⚠ CAUTION

If the traction drive is not properly adjusted, the machine may move in the direction opposite of what you intended, causing injury and/or property damage.

Carefully check the traction drive and adjust it properly, if necessary; refer to Checking and Adjusting the Traction Cable (page 18) for more information.

Important: **If the machine moves when the traction lever is in the released position, check the traction cable; refer to Checking and Adjusting the Traction Cable (page 18) or take the machine to an Authorized Service Dealer for service.**

1. To engage the traction drive, squeeze the left (traction) lever to the handgrip (Figure 16).

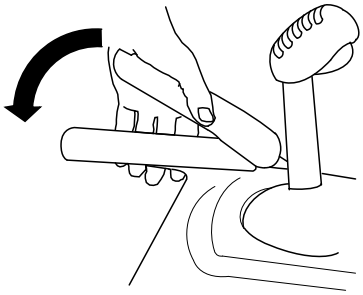

g322974

Figure 16

2. To stop the traction drive, release the traction lever.

Using the Wheel-Clutch Levers

The wheel-clutch levers allow you to momentarily disengage the drive to 1 or both wheels with the traction-drive lever still engaged. This enables you to turn and maneuver the machine easily.

Note: Holding down the traction lever against the handle engages the traction drive to both wheels.

To turn the machine to the right, lift up the right wheel-clutch lever and squeeze it toward the handle (Figure 17).

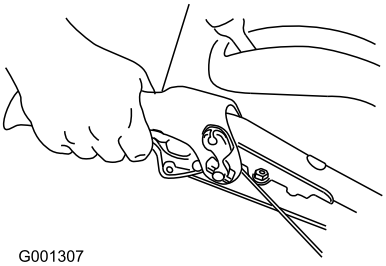

G001307

g001307

Figure 17

Note: This disengages the drive to the right wheel while the left wheel continues driving, and the machine turns to the right.

Note: Similarly, squeezing the left wheel-clutch lever turns the machine to the left.

When you complete the turn, release the wheel-clutch lever, and the drive re-engages both wheels (Figure 18).

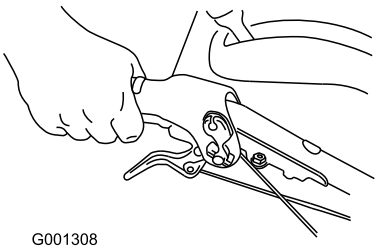

G001308

g001308

Figure 18

Momentarily squeezing and releasing the left or right wheel-clutch lever also allows for steering adjustments to keep the machine going in a straight line, especially in deep snow.

Squeezing both wheel-clutch levers simultaneously disengages the drive to both wheels. This enables you to manually move the machine backward without stopping to shift it into a reverse gear. It also allows you to maneuver and transport the machine more easily when the engine is not running.

Operating the Speed Selector

The speed selector has forward and reverse gears. To change speeds, release the traction lever and shift the speed-selector lever to the desired position (Figure 19). The lever locks in a notch at each speed selection.

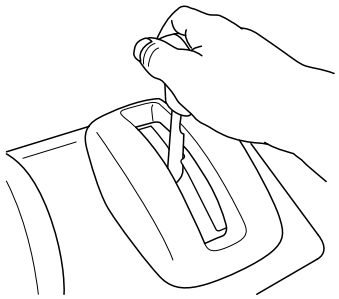

g326462

Figure 19

Operating the Auger/Impeller Drive

1. To engage the auger/impeller drive, squeeze the right (auger/impeller) lever to the handgrip (Figure 20).

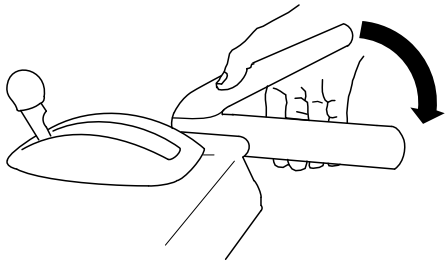

g322975

Figure 20

2. To stop the auger and impeller, release the right lever.

   Important: **When you engage both the auger/impeller lever and the traction lever, the traction lever locks the auger/impeller lever down, freeing your right hand. To release both levers, simply release the left (traction) lever.**

3. If the auger and impeller continue to rotate when you release the auger/impeller lever, do not operate the machine. Check the auger/impeller cable; refer to Checking and Adjusting the Auger/Impeller Cable (page 19) and adjust it if necessary. Otherwise, take the machine to an Authorized Service Dealer for service.

⚠ WARNING

If the auger and impeller continue to rotate when you release the auger/impeller lever, you could seriously injure yourself or others.

Do not operate the machine. Take it to an Authorized Service Dealer for service.

Operating the Quick Stick®

Note: Fully press the blue knob to release the latch and operate the Quick Stick®.

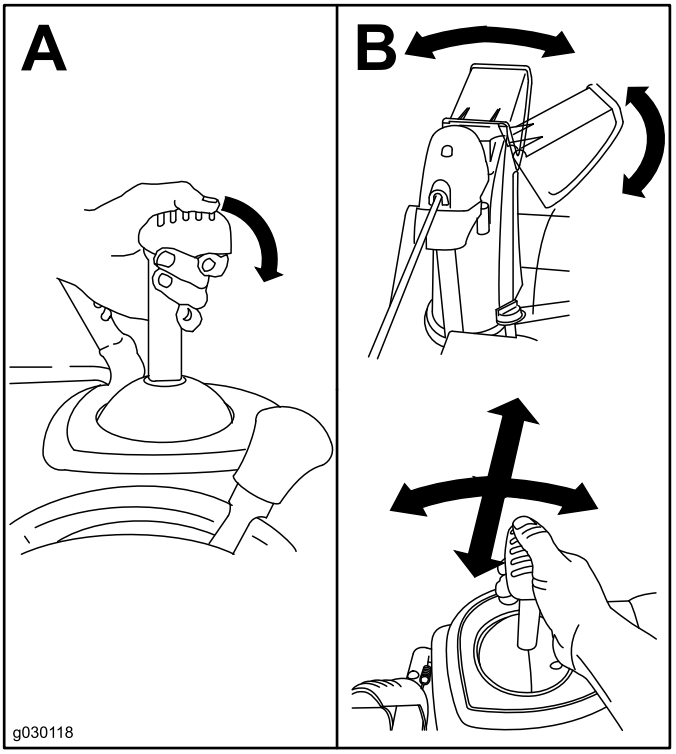

g030118

Figure 21

Clearing a Clogged Discharge Chute

⚠ WARNING

If the auger/impeller is running but there is no snow coming out of the discharge chute, the discharge chute may be clogged.

Never use your hands to clear a clogged discharge chute. This could result in personal injury.

- To unclog the discharge chute, stay in the operating position and release the left (traction) lever. While running the auger/impeller, push down on the handles to raise the front of the machine a few centimeters (inches) off the pavement. Then lift the handles quickly to bump the front of the machine on the pavement. Repeat if necessary until a stream of snow comes out the discharge chute.
- If you cannot unclog the discharge chute by bumping the front of the machine, **shut off the**

engine, wait for all moving parts to stop, and use the snow-cleanout tool (Figure 9).

Important: **Unclogging the discharge chute by bumping the front of the machine on the pavement may cause the skids to move. Adjust the skids and tighten the skid bolts securely; refer to Checking and Adjusting the Auger Skids and Scraper (page 16).**

Operating Tips

⚠ DANGER

When the machine is in operation, the impeller and auger rotate and can injure or amputate hands or feet.

- **Before adjusting, cleaning, inspecting, troubleshooting, or repairing the machine, shut off the engine and wait for all moving parts to stop. Disconnect the wire from the spark plug and keep it away from the plug to prevent someone from accidentally starting the engine.**
- **Remove an obstruction from the discharge chute; refer to Clearing a Clogged Discharge Chute (page 13). Use the snow-cleanout tool (Figure 10), not your hands, to remove an obstruction from the discharge chute.**
- **Stay behind the handles and away from the discharge opening while operating the machine.**
- **Keep your face, hands, feet, and any other part of your body or clothing away from concealed, moving, or rotating parts.**

⚠ WARNING

The impeller can throw stones, toys, and other foreign objects and cause serious personal injury to you or bystanders.

- **Keep the area to be cleared free of all objects that the auger could pick up and throw.**
- **Keep all children and pets away from the area of operation.**
- Always set the throttle to the FAST position when throwing snow.
- If the engine slows down under a load or the tracks slip, shift the machine into a lower gear.
- If the front of the machine rides up, shift the machine into a lower gear. If the front continues to ride up, lift up on the handles.

After Operation

After Operation Safety

General Safety

- Never store the machine with fuel in the fuel tank inside a building where ignition sources are present, such as hot water heaters, space heaters, or clothes dryers. Allow the engine to cool before storing the machine in any enclosure.
- When storing the machine for more than 30 days, refer to Storage (page 22) for important information.
- Run the machine a few minutes after throwing snow to prevent freeze-up of the collector and impeller.

Preventing Freeze-up after Use

- In snowy and cold conditions, some controls and moving parts may freeze. **Do not use excessive force when trying to operate frozen controls.** If you have difficulty operating any control or part, start the engine and let it run for a few minutes.
- After using the machine, let the engine run for a few minutes to prevent moving parts from freezing. Engage the auger/impeller to clear any remaining snow from inside the housing. Rotate the Quick Stick to prevent it from freezing. Shut off the engine, wait for all moving parts to stop, and remove all ice and snow from the machine.
- With the engine off, pull the recoil-start handle several times and push the electric-start button once to prevent the recoil starter and electric starter from freezing up.

Maintenance

Recommended Maintenance Schedule(s)

Maintenance Service Interval	Maintenance Procedure
After the first 2 hours	• Inspect the traction cable and adjust it if necessary. • Inspect the auger/impeller cable and adjust it if necessary.
After the first 5 hours	• Change the engine oil.
Before each use or daily	• Check the engine-oil level and add oil if necessary.
Every 50 hours	• Change the engine oil. Change the engine oil every 25 operating hours when operating the engine under a heavy load.
Every 100 hours	• Replace the spark plug.
Monthly	• Check the track tension and adjust if needed.
Yearly	• Check the skids and the scraper and adjust them if necessary. • Check and adjust the track skids. • Inspect the traction cable and adjust or replace it if necessary. • Inspect the auger/impeller cable and adjust or replace it if necessary. • Check the auger-gearbox oil and add oil if necessary.
Yearly or before storage	• Drain the fuel and run the engine to dry out the fuel tank and the carburetor at the end of the season. • Have an Authorized Service Dealer inspect and replace the traction drive belt and/or the auger/impeller drive belt, if necessary.

Maintenance Safety

Read the following safety precautions before performing any maintenance on the machine:

- Shut off the engine, remove the key, and wait for all movement to stop before you leave the operator's position. Allow the machine to cool before adjusting, servicing, cleaning, or storing it.
- Always wear eye protection while performing an adjustment or repair to protect your eyes from foreign objects that the machine may throw.
- Check all fasteners at frequent intervals for proper tightness to ensure that the machine is in safe working condition.
- Do not change the governor settings on the engine.

  Purchase only genuine Toro replacement parts and accessories.

Preparing for Maintenance

1. Move the machine to a level surface.
2. Shut off the engine, remove the key, and wait for all moving parts to stop.
3. Disconnect the spark-plug wire. Refer to Replacing the Spark Plug (page 21).

Checking the Engine-Oil Level

Service Interval: Before each use or daily—Check the engine-oil level and add oil if necessary.

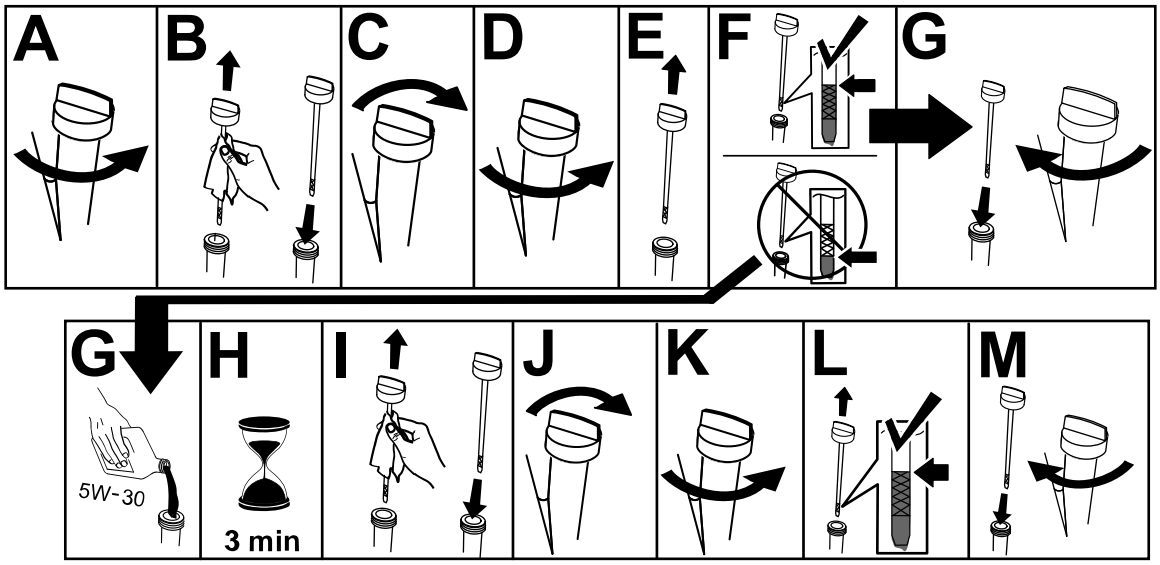

g257528

Checking and Adjusting the Auger Skids and Scraper

Service Interval: Yearly—Check the skids and the scraper and adjust them if necessary.

Check the skids and the scraper to ensure that the auger does not contact the paved or gravel surface. Adjust the skids and the scraper as needed to compensate for wear.

1. Loosen the nuts that secure both skids to the auger sides until the skids slide up and down easily.

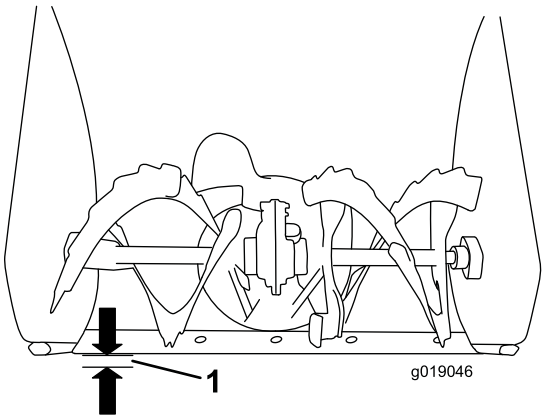

g019046

Figure 23

1. 3 mm (1/8 inch)

Important: **The auger blades must be supported above the ground by the skids.**

2. Ensure that the scraper is 3 mm (1/8 inch) above and parallel to a level surface.

   Note: If the pavement is cracked, rough, or uneven, adjust the skids to raise the scraper. For gravel surfaces, adjust the skids further down to prevent the machine from picking up rocks.

3. Move the skids down until they are even with the ground.

4. Firmly tighten the nuts that secure both skids to the auger sides.

   Note: To quickly adjust the skids if they loosen, support the scraper 3 mm (1/8 inch) off the pavement, then adjust the skids down to the pavement.

   Note: If the skids become excessively worn, you can turn them over and set the unused side toward the pavement.

Checking and Adjusting the Track Skids

Service Interval: Yearly

1. Refer to Preparing for Maintenance (page 15).
2. Loosen the skid bolts (A of Figure 24).
3. Lower the skid so that it is tangent with the front and rear track rollers (B of Figure 24).
4. Tighten the skid bolts (C of Figure 24).

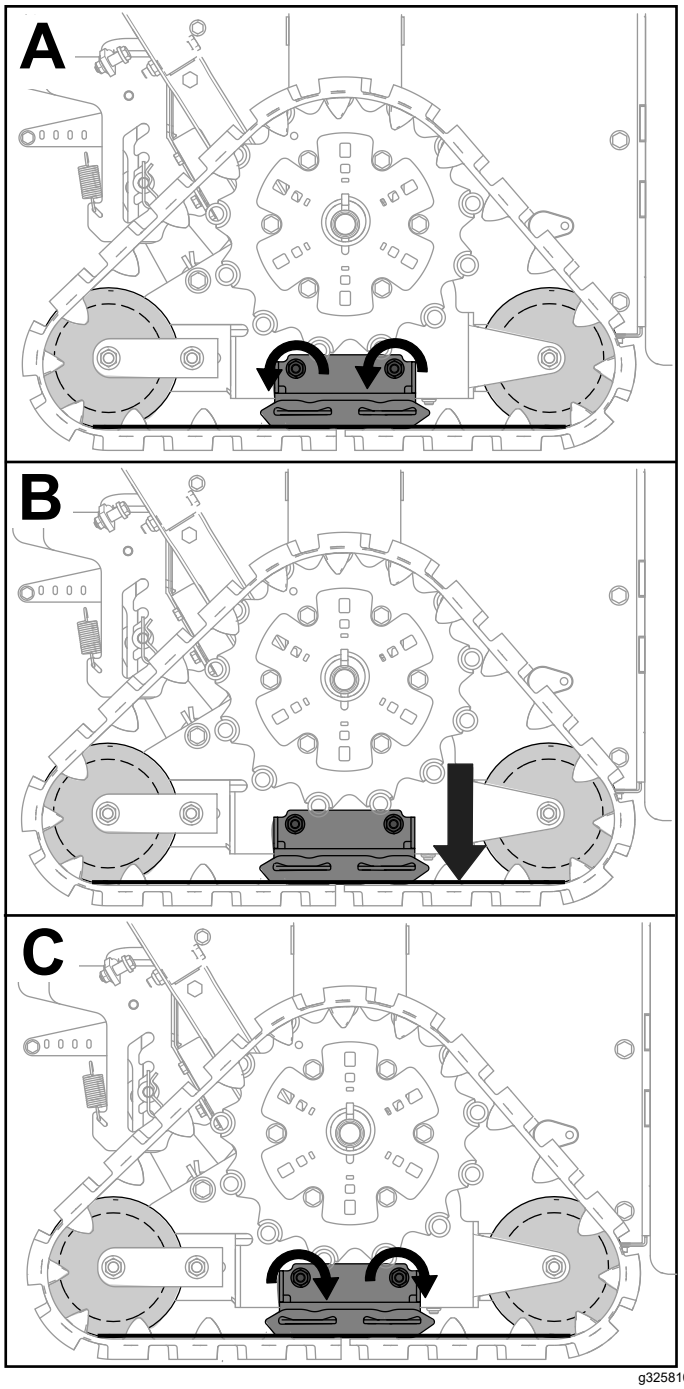

g325810

Figure 24

Checking and Adjusting the Track Tension

Service Interval: Monthly

1. Refer to Preparing for Maintenance (page 15).
2. Apply 44 N (10 lbf) between the middle and rear roller (Figure 25).

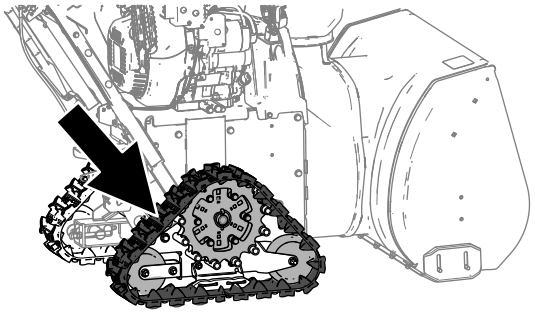

g325787

Figure 25

3. Ensure that the deflection of the track is approximately 9.5 mm (3/8 inch).
4. If the track deflection is not approximately 9.5 mm (3/8) inch or if the tracks are jumping, adjust the track tension as follows:
   A. Slightly loosen the nuts on the rear roller yoke (Figure 26).

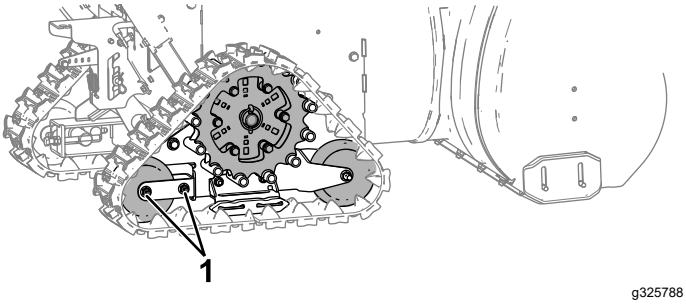

g325788

Figure 26

1. Rear-roller-yoke nuts

   B. Adjust the hex head bolt as needed (Figure 27).

   Note: Turn the bolt clockwise if the track has more than 9.5 mm (3/8 inch) deflection. Turn the bolt counterclockwise if the track has less than 9.5 mm (3/8 inch) deflection.

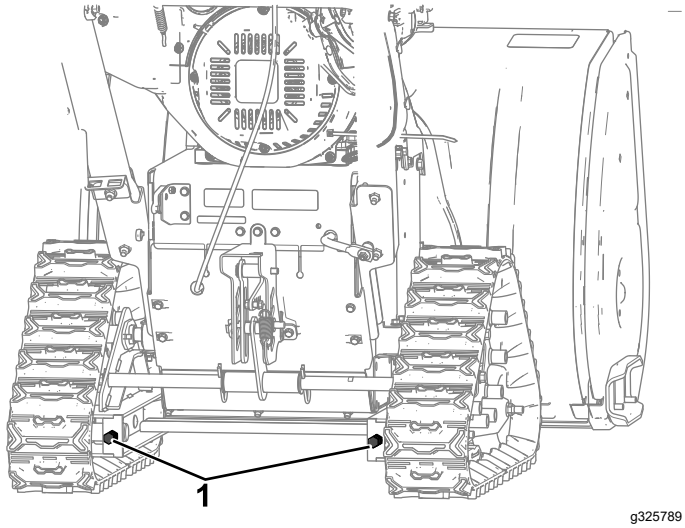

Figure 27

1. Hex head adjustment bolts

C. Ensure that the deflection of the track is approximately 9.5 mm (3/8 inch).

D. Tighten the nuts on the rear roller yoke.

E. Repeat for the other track.

Checking and Adjusting the Traction Cable

Service Interval: After the first 2 hours—Inspect the traction cable and adjust it if necessary.

Yearly—Inspect the traction cable and adjust or replace it if necessary.

If the machine does not drive in the forward or reverse speeds or it drives when you release the traction lever, adjust the traction cable.

With the traction level disengaged, ensure that the there is no slack in the traction cable (Figure 28).

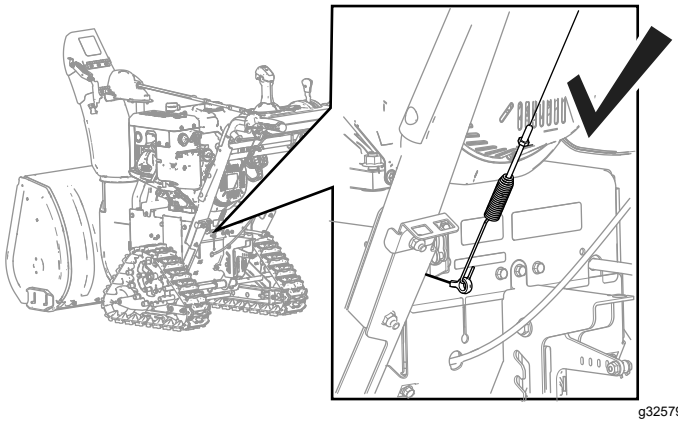

Figure 28

If there is slack in the traction cable, the left (traction) cable is not properly adjusted.

To adjust the traction cable, do the following:

1. Loosen the jam nut (Figure 29).
2. Loosen or tighten the turnbuckle until the cable is taught.
3. Tighten the jam nut.

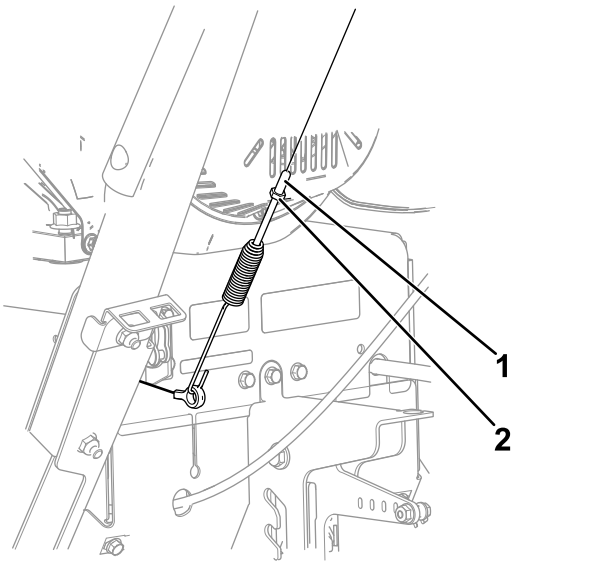

Figure 29

1. Turnbuckle
2. Jam nut

Checking and Adjusting the Auger/Impeller Cable

Service Interval: After the first 2 hours—Inspect the auger/impeller cable and adjust it if necessary.

Yearly—Inspect the auger/impeller cable and adjust or replace it if necessary.

1. Remove the 2 screws that are holding the belt cover in place (Figure 30).
2. Remove the belt cover (Figure 30).

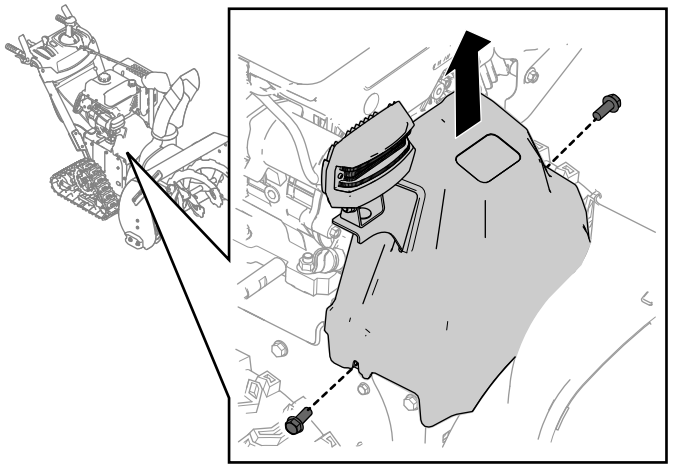

g323250

Figure 30

3. With the auger/impeller lever disengaged, ensure that the gap between the auger clutch arm and the frame of the machine is 1.5 mm (1/16 inch) as shown in Figure 31.

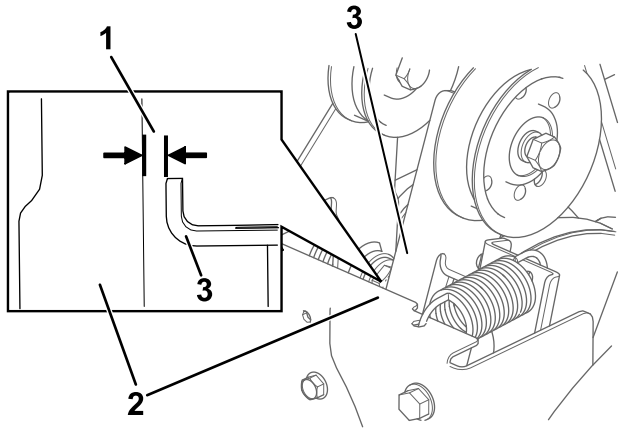

g260108

Figure 31

1. 1.5 mm (1/16 inch)
2. Frame
3. Auger clutch arm

4. If the auger/impeller cable is not properly adjusted, do the following steps:
5. Loosen the jam nut (Figure 32).

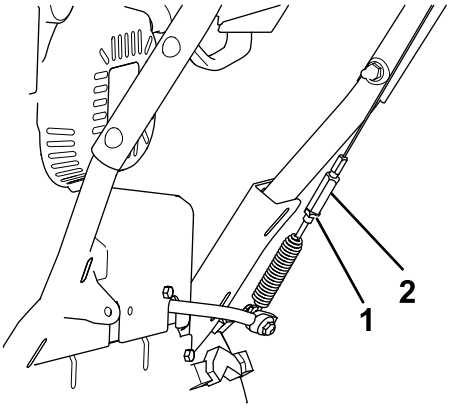

g322960

Figure 32

1. Jam nut
2. Turnbuckle

6. Loosen or tighten the turnbuckle that adjusts the tension on the cable (Figure 32).
7. Adjust the turnbuckle until you obtain the proper gap.
8. Tighten the jam nut.
9. Insert the 2 screws that you previously removed on the belt cover.
10. If the auger/impeller cable is properly adjusted but a problem remains, contact an Authorized Service Dealer.

Checking the Auger-Gearbox-Oil Level

Service Interval: Yearly—Check the auger-gearbox oil and add oil if necessary.

1. Move the machine to a level surface.
2. Clean the area around the pipe plug and remove the pipe plug from the gearbox (Figure 33).

   Note: If needed, use pliers to assist in removing the pipe plug.

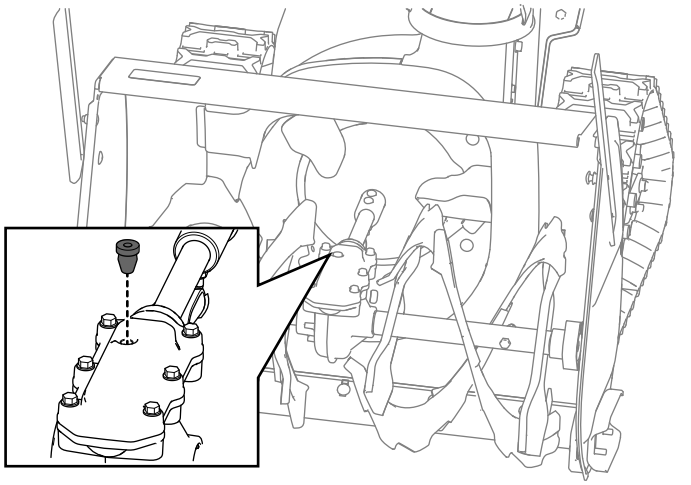

g323263

Figure 33

3. Check the oil level using a suitable measuring device, such as a clean cable tie. The oil should be approximately 3.8 cm (1.5 inches) below the filler opening (Figure 34).

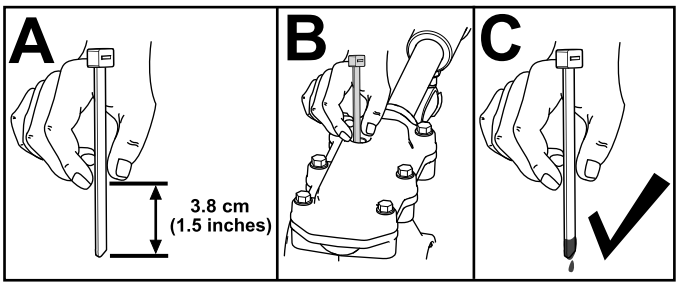

g257737

Figure 34

4. If the oil level is low, add GL-5 or GL-6, SAE 85-95 EP gear oil lubricant to the gearbox, then check the oil level again.

   Note: Do not use synthetic oil.

5. Install the pipe plug in the gearbox.

Changing the Engine Oil

Service Interval: After the first 5 hours—Change the engine oil.

Every 50 hours—Change the engine oil. Change the engine oil every 25 operating hours when operating the engine under a heavy load.

If possible, run the engine for a few minutes before changing the oil because warm oil flows better and carries more contaminants.

Engine oil capacity	0.95 L (32 fl oz)*
Oil viscosity	Refer to Figure 36.
API service classification	SJ or higher

*There is residual oil in the crankcase after you drain the oil. Do not pour the entire capacity of oil into the crankcase. Fill the crankcase with oil as directed in the following steps.

1. Move the machine to a level surface.
2. Clean the area around the oil-drain nut (Figure 35).

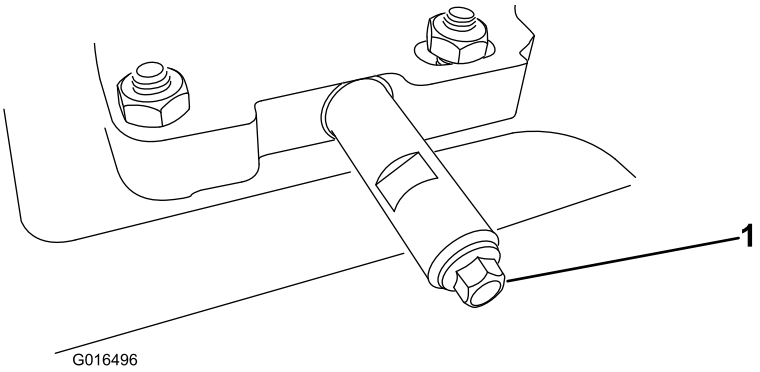

G016496

g016496

Figure 35

1. Oil-drain nut

3. Slide an oil-drain pan under the drain extension and remove the oil-drain nut.
4. Drain the oil.

   Note: Dispose of the used oil properly at a local recycling center.

5. Install the oil-drain nut and tighten it securely.
6. Clean around the oil fill/dipstick.
7. Unscrew the dipstick and remove it.
8. Carefully pour about 3/4 of the engine capacity of oil into the oil-fill tube.

   Use Figure 36 to select the best oil viscosity for the outdoor temperature range expected:

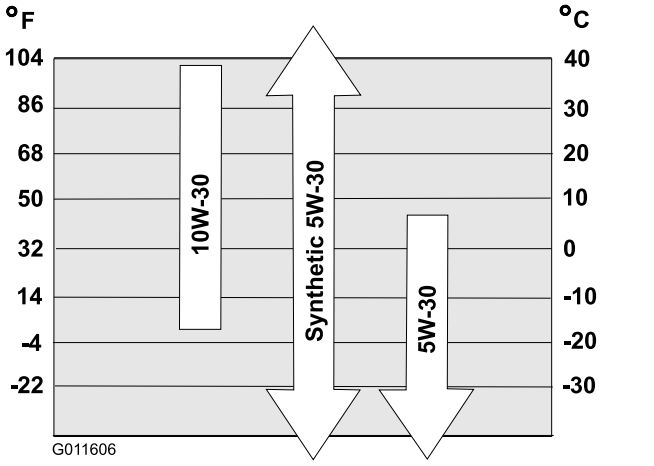

G011606

g011606

Figure 36

9. Wait 3 minutes for the oil to settle in the engine.
10. Wipe the dipstick clean with a clean cloth.
11. Insert the dipstick into the oil-fill tube and screw it in, then remove the dipstick.
12. Read the oil level on the dipstick.
    - If the oil level on the dipstick is too low, carefully pour a small amount of oil into the oil-fill tube, wait 3 minutes, and repeat steps 10 through 12 until the oil level on the dipstick is correct.
    - If the oil level on the dipstick is too high, drain the excess oil until the oil level on the dipstick is correct.

    Important: **If the oil level in the engine is too low or too high and you run the engine, you may damage the engine.**
13. Install the dipstick into the oil-fill tube securely.

Replacing the Spark Plug

Service Interval: Every 100 hours—Replace the spark plug.

⚠ WARNING

Replacing the spark plug while the engine is hot can result in burns.

Wait until the engine is cool to replace the spark plug.

Use a Toro spark plug or equivalent (Champion® RN9YC or NGK BPR6ES).

1. Remove the boot (Figure 37).

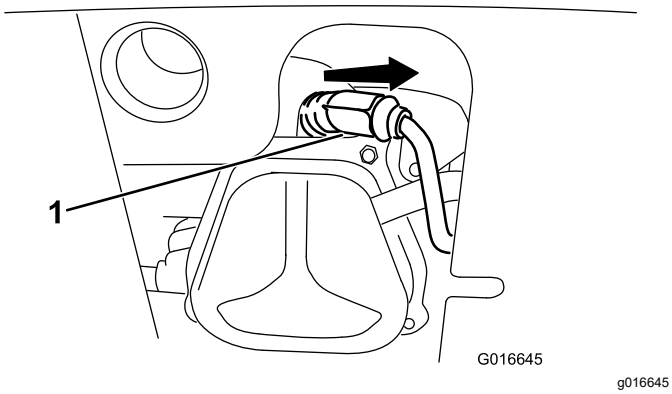

Figure 37

1. Spark-plug boot

2. Clean around the base of the spark plug.

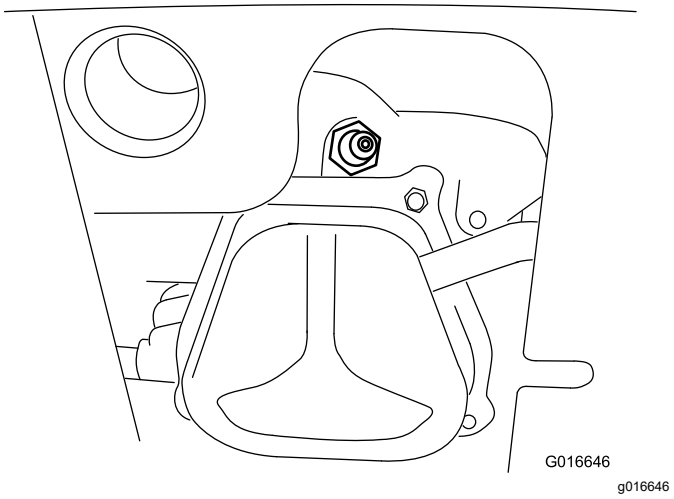

Figure 38

3. Remove and discard the old spark plug.

   Note: You will need a ratchet wrench extension to remove the spark plug.
4. Set the gap between the electrodes on a new spark plug at 0.76 mm (0.030 inch) as shown in Figure 39.

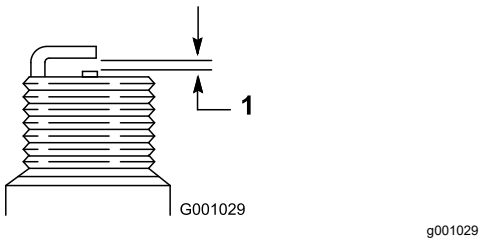

Figure 39

1. 0.76 mm (0.030 inch)

5. Install the new spark plug, tighten it firmly, and attach the ignition wire to the spark plug.

   Note: Ensure that the ignition wire snaps completely into place on the spark plug.

Replacing the Drive Belts

If the auger/impeller drive belt or the traction-drive belt becomes worn, oil-soaked, or otherwise damaged, have an Authorized Service Dealer replace the belt.

Replacing the Headlight

Replace the headlight assembly (Toro part number 138-0670) when needed.

1. Remove the headlight wire from the back of the headlight (A of Figure 40).
2. Remove the bolt and nut holding the headlight assembly onto the headlight bracket and then remove the old headlight assembly (B of Figure 40).
3. Secure the new headlight assembly onto the headlight bracket with the previously removed nut and bolt (C of Figure 40).
4. Insert the headlight wire straight into the back of the headlight until it is securely in place (D of Figure 40).

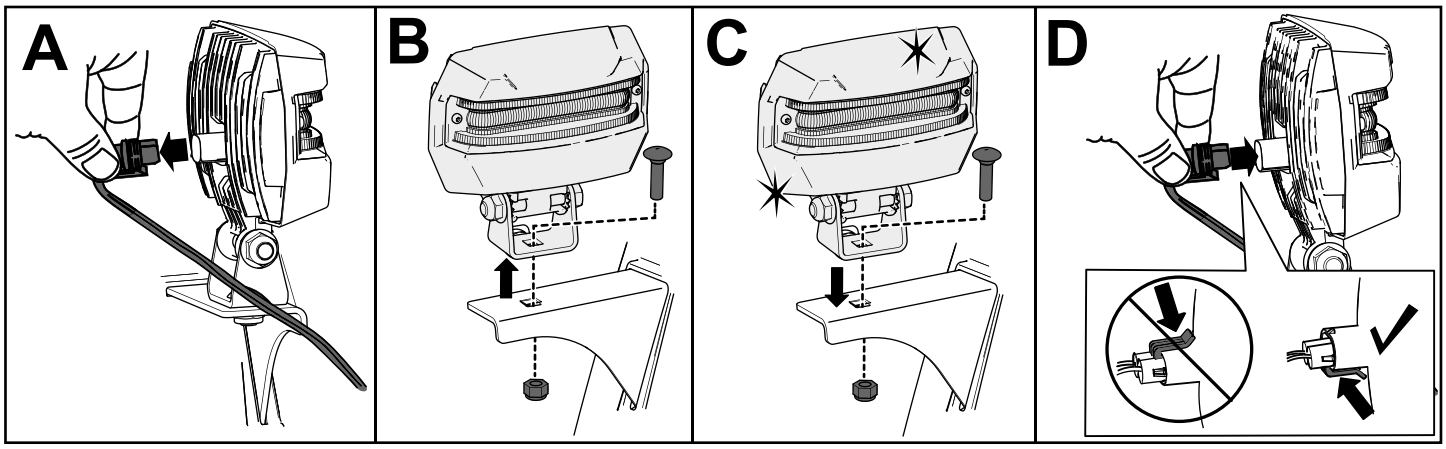

Figure 40

Storage

Storage Safety

- Shut off the engine, remove the key, and wait for all movement to stop before you leave the operator's position. Allow the machine to cool before adjusting, servicing, cleaning, or storing it.
- Fuel fumes are highly flammable, explosive, and dangerous if inhaled. If you store the product in an area with an open flame, the fuel fumes may ignite and cause an explosion.
- Do not store the machine in a house (living area), basement, or any other area where ignition sources may be present, such as hot water and space heaters, clothes dryers, furnaces, and other appliances.
- Do not tip the machine either forward or backward with fuel in the fuel tank; otherwise, fuel may leak out of the machine.
- Do not store the machine with its handle tipped down onto the ground; otherwise, oil may leak into the engine cylinder and onto the ground, and the engine may not start.

Storing the Machine

1. On the last refueling of the year, add fuel stabilizer to fresh fuel as directed by the fuel stabilizer manufacturer.

   Important: **Do not store fuel longer than that suggested by the fuel stabilizer manufacturer.**
2. Run the engine for 10 minutes to distribute the conditioned fuel through the fuel system.
3. Run the machine until the engine runs out of fuel.
4. Prime the engine and start it again.
5. Allow the engine to run until it shuts off. When you can no longer start the engine, it is sufficiently dry.
6. Allow the engine to cool.
7. Remove the key.
8. Clean the machine thoroughly.
9. Touch up chipped surfaces with paint available from an Authorized Service Dealer. Sand affected areas before painting, and use a rust preventative to prevent the metal parts from rusting.
10. Tighten all loose screws, bolts, and locknuts. Repair or replace any damaged parts.

11. Cover the machine and store it in a clean, dry place out of the reach of children.

Removing the Machine from Storage

Perform the annual maintenance procedures as given in the Recommended Maintenance Schedule; refer to Maintenance (page 15).

Troubleshooting

Problem	Possible Cause	Corrective Action
The electric starter does not turn (electric-start models only).	1. The power cord is disconnected at the outlet or the machine. 2. The power cord is worn, corroded, or damaged. 3. The power outlet is not energized.	1. Connect the power cord to the outlet and/or the machine. 2. Replace the power cord. 3. Have a qualified electrician energize the outlet.
The engine does not start or starts hard.	1. The key is not in the ignition. 2. The choke is in the OFF position and the primer has not been pressed. 3. The fuel-shutoff valve is not open. 4. The throttle is not in the FAST position. 5. The fuel tank is empty or the fuel system contains stale fuel. 6. The spark-plug wire is loose or disconnected. 7. The spark plug is pitted, fouled, or the gap is incorrect. 8. The fuel-vent cap is restricted. 9. The engine-oil level in the engine crankcase is too low or too high.	1. Insert the key into the ignition. 2. Move the choke to the ON position and press the primer 3 times. 3. Open the fuel-shutoff valve. 4. Move the throttle to the FAST position. 5. Drain and/or fill the fuel tank with fresh fuel (not more than 30 days old). If the problem persists, contact an Authorized Service Dealer. 6. Connect the wire to the spark plug. 7. Check the spark plug and adjust the gap if necessary. Replace the spark plug if it is pitted, fouled, or cracked. 8. Remove the vent restriction or replace the fuel cap. 9. Add or drain oil to adjust the oil level in the engine crankcase to the Full mark on the dipstick.
The engine runs rough.	1. The choke is in the ON position. 2. The fuel-shutoff valve is not completely open. 3. The fuel tank is nearly empty or contains stale fuel. 4. The spark-plug wire is loose. 5. The spark plug is pitted, fouled, or the gap is incorrect. 6. The engine-oil level in the engine crankcase is too low or too high.	1. Move the choke to the OFF position. 2. Open the fuel-shutoff valve. 3. Drain and fill the fuel tank with fresh fuel (not more than 30 days old). If the problem persists, contact an Authorized Service Dealer. 4. Connect the wire to the spark plug. 5. Check the spark plug and adjust the gap if necessary. Replace the spark plug if it is pitted, fouled, or cracked. 6. Add or drain oil to adjust the oil level in the engine crankcase to the Full mark on the dipstick.

Problem	Possible Cause	Corrective Action
The engine runs, but the machine discharges snow poorly or not at all.	1. The throttle is not in the FAST position when throwing snow. 2. The machine is moving too fast to clear the snow. 3. You are trying to remove too much snow per swath. 4. You are trying to remove extremely heavy or wet snow. 5. The discharge chute is plugged. 6. The auger/impeller drive belt is loose or is off the pulley. 7. The auger/impeller drive belt is worn or broken.	1. Move the throttle to the FAST position. 2. Shift the machine into a lower gear. 3. Reduce the amount of snow removed per swath. 4. Do not overload the machine with extremely heavy or wet snow. 5. Unclog the discharge chute. 6. Install and/or adjust the auger/impeller drive belt; refer to www.Toro.com for servicing information or take the machine to an Authorized Service Dealer. 7. Replace the auger/impeller drive belt; refer to www.Toro.com for servicing information or take the machine to an Authorized Service Dealer.
The discharge chute either does not lock into place or does not move.	1. The discharge-chute latch is not properly adjusted.	1. Adjust the discharge-chute latch.
The machine does not properly clear the snow off the surface.	1. The skids and/or scraper are not properly adjusted.	1. Adjust the skids and/or the scraper.

Notes:

California Proposition 65 Warning Information

What is this warning?

You may see a product for sale that has a warning label like the following:



WARNING: Cancer and Reproductive Harm—www.p65Warnings.ca.gov.

What is Prop 65?

Prop 65 applies to any company operating in California, selling products in California, or manufacturing products that may be sold in or brought into California. It mandates that the Governor of California maintain and publish a list of chemicals known to cause cancer, birth defects, and/or other reproductive harm. The list, which is updated annually, includes hundreds of chemicals found in many everyday items. The purpose of Prop 65 is to inform the public about exposure to these chemicals.

Prop 65 does not ban the sale of products containing these chemicals but instead requires warnings on any product, product packaging, or literature with the product. Moreover, a Prop 65 warning does not mean that a product is in violation of any product safety standards or requirements. In fact, the California government has clarified that a Prop 65 warning "is not the same as a regulatory decision that a product is 'safe' or 'unsafe.'" Many of these chemicals have been used in everyday products for years without documented harm. For more information, go to https://oag.ca.gov/prop65/faqs-view-all.

A Prop 65 warning means that a company has either (1) evaluated the exposure and has concluded that it exceeds the "no significant risk level"; or (2) has chosen to provide a warning based on its understanding about the presence of a listed chemical without attempting to evaluate the exposure.

Does this law apply everywhere?

Prop 65 warnings are required under California law only. These warnings are seen throughout California in a wide range of settings, including but not limited to restaurants, grocery stores, hotels, schools, and hospitals, and on a wide variety of products. Additionally, some online and mail order retailers provide Prop 65 warnings on their websites or in catalogs.

How do the California warnings compare to federal limits?

Prop 65 standards are often more stringent than federal and international standards. There are various substances that require a Prop 65 warning at levels that are far lower than federal action limits. For example, the Prop 65 standard for warnings for lead is 0.5 µg/day, which is well below the federal and international standards.

Why don't all similar products carry the warning?

- Products sold in California require Prop 65 labelling while similar products sold elsewhere do not.
- A company involved in a Prop 65 lawsuit reaching a settlement may be required to use Prop 65 warnings for its products, but other companies making similar products may have no such requirement.
- The enforcement of Prop 65 is inconsistent.
- Companies may elect not to provide warnings because they conclude that they are not required to do so under Prop 65; a lack of warnings for a product does not mean that the product is free of listed chemicals at similar levels.

Why does Toro include this warning?

Toro has chosen to provide consumers with as much information as possible so that they can make informed decisions about the products they buy and use. Toro provides warnings in certain cases based on its knowledge of the presence of one or more listed chemicals without evaluating the level of exposure, as not all the listed chemicals provide exposure limit requirements. While the exposure from Toro products may be negligible or well within the "no significant risk" range, out of an abundance of caution, Toro has elected to provide the Prop 65 warnings. Moreover, if Toro does not provide these warnings, it could be sued by the State of California or by private parties seeking to enforce Prop 65 and subject to substantial penalties.



Count on it.