Form No. 3324-636

TORO®

# CCR™ 2450 GTS®
# CCR™ 3650 GTS®

## Snowthrower

**Model No. 38428—210000001 and Up**
**Model No. 38429—210000001 and Up**
**Model No. 38441—210000001 and Up**
**Model No. 38442—210000001 and Up**

# Operator's Manual

CE

International English (GB)

# Contents


| | Page |
|---|---|
| Introduction | 2 |
| Safety | 3 |
| General Snowthrower Safety | 3 |
| Toro Snowthrower Safety | 4 |
| Sound Pressure Level | 5 |
| Sound Power Level | 5 |
| Vibration Level | 5 |
| Symbol Glossary | 5 |
| Assembly | 9 |
| Loose Parts | 9 |
| Installing the Wheels | 9 |
| Installing the Handle | 10 |
| Installing the Discharge Chute | 11 |
| Installing the Chute Crank | 11 |
| Installing the Control Cable | 12 |
| Before Starting | 12 |
| Mixing Gasoline and Oil | 12 |
| Filling the Fuel Tank with Gasoline-and-Oil Mixture | 14 |
| Operation | 14 |
| Operating Controls | 14 |
| Starting the Engine | 14 |
| Stopping the Engine | 15 |
| Starting the Rotor Blades | 15 |
| Stopping the Rotor Blades | 15 |
| Adjusting the Discharge Chute | 15 |
| Snowthrowing Tips | 16 |
| Maintenance | 16 |
| Recommended Maintenance Schedule | 16 |
| Adjusting the Control Cable | 17 |
| Replacing the Scraper | 18 |
| Replacing the Rotor Blades | 18 |
| Replacing the Spark Plug | 20 |
| Replacing the Drive Belt | 20 |
| Emptying the Fuel Tank | 21 |
| Troubleshooting | 21 |
| Storage | 23 |
| Preparing the Fuel System | 24 |
| Preparing the Engine | 24 |
| Preparing the Snowthrower | 24 |


# Introduction

Thank you for choosing a Toro product. We want you to be completely satisfied with your new purchase.

Read this manual carefully to learn how to operate and maintain your product properly. The information in this manual can help you and others avoid injury and product damage. Although Toro designs and produces safe products, you are responsible for operating the product properly and safely.

Whenever you contact your Authorized Service Dealer or the factory for help with service, genuine Toro parts, or additional information, have the model number and the serial number of your product handy. You will find the model number and serial number decal on the product as illustrated in Figure 1.

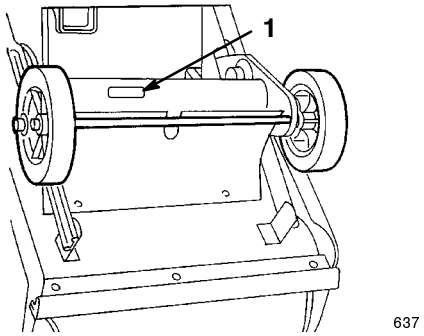


**Figure 1**

1. Model number and serial number decal

Write the product model number and serial number in the space below:

**Model No.** _____

**Serial No.** _____

**Note:** At the time of manufacture, the snowthrower conformed with or exceeded all applicable safety standards in effect for snowthrowers.

This manual identifies potential hazards and has special safety messages that help you and others avoid personal injury and even death. DANGER, WARNING, and CAUTION are words used to identify the level of hazard.

**DANGER** signals an extreme hazard that will cause serious injury or death if you do not follow the recommended precautions.

©2000 **The Toro Company**
**8111 Lyndale Ave. South**
**Bloomington, MN 55420-1196**



Printed in USA

**WARNING** signals a hazard that may cause serious injury or death if you do not follow the recommended precautions.

**CAUTION** signals a hazard that may cause minor or moderate injury if you do not follow the recommended precautions.

This manual uses two other words to highlight information. **Important** calls attention to special mechanical information and **Note** emphasizes general information worthy of special attention.

# Safety

**This snowthrower (models 38441 and 38442 only) meets or exceeds the B71.3 specifications of the American National Standards Institute and the ISO standard 8437 in effect at the time of production. However, improper use or maintenance by the operator or owner can result in injury. To reduce the potential for injury, comply with these safety instructions.**

The snowthrower is designed and tested to offer reasonably safe service; however, **failure to comply with the following instructions may result in personal injury.**

**To ensure maximum safety, best performance, and to gain knowledge of the product, it is essential that you and any other operator of the snowthrower read and understand the contents of this manual before the motor is ever started. Pay particular attention to the safety alert symbol ⚠ which means CAUTION, WARNING, OR DANGER — "personal safety instruction." Read and understand the instruction because it has to do with safety. Failure to comply with instruction may result in personal injury.**

## General Snowthrower Safety

The following instructions have been adapted from the ANSI/OPEI standard B71.3 and ISO standard 8437 in effect at the time of production. Information or terminology specific to Toro snowthrowers is enclosed in parenthesis.

### Training

- Read the operator's manual carefully. Be thoroughly familiar with the controls and the proper use of the equipment. Know how to stop the unit and disengage the controls quickly.
- Never allow children to operate the equipment. Never allow adults to operate the equipment without proper instruction.
- Keep the area of operation clear of all persons, particularly small children and pets.
- Exercise caution to avoid slipping or falling, especially when operating in reverse.

### Preparation

- Thoroughly inspect the area where the equipment is to be used and remove all doormats, sleds, boards, wires, and other foreign objects.
- Disengage all clutches and shift into neutral before starting the engine.
- Do not operate the equipment without wearing adequate winter garments. Wear footwear that will improve footing on slippery surfaces.
- Handle fuel with care; it is highly flammable.
  - Use an approved fuel container.
  - Never add fuel to a running or hot engine.
  - Fill fuel tank outdoors with extreme care. Never fill fuel tank indoors.
  - Replace gasoline caps securely and wipe up spilled fuel.
- Use only the power cord supplied with the snowthrower and a receptacle appropriate for use with the cord for electric starting motors.
- Adjust the auger housing height to clear gravel or crushed rock surface. (This is not necessary on single-stage snowthrowers.)
- Never attempt to make any adjustments while the engine is running, except where specifically recommended by Toro.
- Let engine and machine adjust to outdoor temperatures before starting to clear snow.
- The operation of any powered machine can result in foreign objects being thrown into the eyes. Always wear safety glasses or eye shields during operation or while performing an adjustment or repair.

### Operation

- Do not put hands or feet near or under rotating parts. Keep clear of the discharge opening at all times.
- Exercise extreme caution when operating on or crossing gravel drives, walks, or roads. Stay alert for hidden hazards or traffic.
- After striking a foreign object, stop the engine, remove the wire from the spark plug, thoroughly inspect the snowthrower for any damage, and repair the damage before restarting and operating the snowthrower.

- If the unit should start to vibrate abnormally, stop the engine and check immediately for the cause. Vibration is generally a warning of trouble.
- Stop the engine whenever you leave the operating position, before unclogging the auger/impeller housing or discharge chute, and when making any repairs, adjustments, or inspections.
- When cleaning, repairing, or inspecting, make certain that the auger/impeller or rotor blades and all moving parts have stopped. Disconnect the spark-plug wire, and keep the wire away from the plug to prevent someone from accidentally starting the engine.
- Do not run the engine indoors, except when starting it and for moving the snowthrower in or out of the building. Open the outside doors; exhaust fumes are dangerous.
- Do not clear snow across the face of slopes. Exercise extreme caution when changing direction on slopes. Do not attempt to clear steep slopes.
- Never operate the snowthrower without proper guards, plates, or other safety protective devices in place.
- Never operate the snowthrower near glass enclosures, automobiles, window wells, drop-offs, etc. without proper adjustment of the snow discharge angle. Keep children and pets away.
- Do not overload the machine capacity by attempting to clear snow at too fast a rate.
- Never operate the machine at high transport speeds on slippery surfaces. Look behind and use care when moving in reverse.
- Never direct discharge at bystanders or allow anyone in front of the unit.
- Disengage power to the auger/impeller or rotor blades when snowthrower is transported or not in use.
- Use only attachments and accessories approved by Toro, such as wheel weights, counterweights, cabs, etc. (Contact your Authorized Service Dealer for accessories available for your snowthrower.)
- Never operate the snowthrower without good visibility or light. Always be sure of your footing, and keep a firm hold on the handles. Walk; never run.

### Maintenance and storage

- Check all fasteners at frequent intervals for proper tightness to be sure that the equipment is in safe working condition.
- Never store the machine with fuel in the fuel tank inside a building where ignition sources are present, such as hot water and space heaters, clothes dryers, etc. Allow the engine to cool before storing in any enclosure.
- Always refer to this operator's manual for important details if the snowthrower is to be stored for an extended period.
- Maintain or replace safety and instruction labels when necessary.
- Run the machine a few minutes after throwing snow to prevent freeze-up of the auger/impeller or rotor blades. Stop the engine, wait for all moving parts to stop, and pull the recoil starter handle several times to prevent it from freezing up.

## Toro Snowthrower Safety

The following list contains safety information specific to Toro products or other safety information that you must know that is not included in the ANSI or ISO standards.

- **The rotating auger/impeller or rotor blades can cut off or injure fingers or hands.** Stay behind the handles and away from the discharge opening while operating the snowthrower. **Keep your face, hands, feet, and any other part of your body or clothing away from concealed, moving, or rotating parts.**
- Before adjusting, cleaning, repairing, and inspecting the snowthrower, and before unclogging the discharge chute, **stop the engine, remove the key, and wait for all moving parts to stop**. Also, disconnect the wire from the spark plug and keep it away from the plug to prevent someone from accidentally starting the engine.
- Use a stick, **not your hands**, to remove obstructions from the discharge chute.
- **Before** leaving the operator's position behind the handles, stop the engine, remove the key, and wait for all moving parts to stop.
- Do not wear loose-fitting clothing that could get caught in moving parts.
- If a shield, safety device, or decal is damaged, illegible, or lost, repair or replace it before beginning operation. Also, tighten any loose fasteners.
- **Do not** smoke while handling gasoline.
- For two-stage snowthrowers, use the lower gear and, for Power Shift snowthrowers, the rear wheel position when operating on slopes.
- **Do not** use the snowthrower on a roof.
- Do not touch the engine while it is running or soon after it has stopped because the engine will be hot enough to cause a burn. Do not add oil or check the oil level in the crankcase when the engine is running.
- Perform only those maintenance instructions described in this manual. Before performing any maintenance, service, or adjustment, stop the engine, remove the key and disconnect the wire from the spark plug, keeping it

away from the plug to prevent someone from accidentally starting the engine. If major repairs are ever needed, contact your Authorized Service Dealer.

- Do not change the governor settings on the engine.
- When storing the snowthrower for more than 30 days, drain the gasoline from the fuel tank to prevent a potential hazard. Store gasoline in an approved fuel container. Remove the key from the ignition switch before storing the snowthrower.
- To ensure the best performance and safety, purchase only genuine Toro replacement parts and accessories.

## Sound Pressure Level

Models 38428 and 39429 have a sound pressure at the operator's ear of 90 dB(A) and models 38441 and 38442 have a sound pressure at the operator's ear of 91 dB(A), based on measurements of identical machines per Directive 81/1051/EEC.

## Sound Power Level

Models 38428 and 39429 have a sound power level of 103 LwA and models 38441 and 38442 have a sound power level of 105 LwA, based on measurements of identical machines per Directive 79/113/EEC.

## Vibration Level

Models 38428 and 39429 have a maximum hand-arm vibration level of 28.5 $m/s^2$ and 38441 and 38442 have a maximum hand-arm vibration level of 30 $m/s^2$, based on measurements of identical machines per EN 1033.

## Symbol Glossary

**Safety alert triangle – symbol within triangle indicates a hazard**



**Safety alert symbol**



**Read operator's manual**



**Consult technical manual for proper service procedures**



**Do not open or remove safety shields while engine is running**

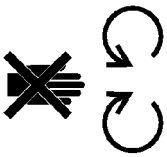

**Stay a safe distance from the machine**

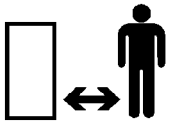

**Stay a safe distance from the machine – single stage snowthrower**



**Stay a safe distance from the machine – two stage snowthrower**

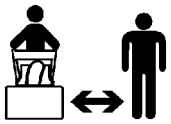

**Shut off engine and remove key before performing maintenance or repair work**



**Shut off engine and remove key before leaving operator position – single stage snowthrower**




**Shut off engine and remove key before leaving operator position – two stage snowthrower**




**Severing of fingers or hand – impeller blade**



**Hot surfaces – burns to fingers or hands**



**Caustic liquids – chemical burns to fingers or hands**



**Do not tip battery**

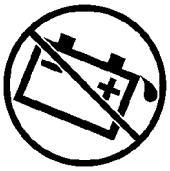

**Keep dry**



**Thrown or flying objects – Whole body exposure**

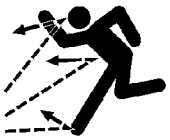

**Electrical shock – electrocution**



**Cutting or entanglement of foot – rotating auger**



**Electric start**

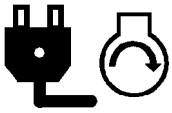

**Machine loss of control – uphill slope**



**Machine loss of control – downhill slope**



**Traction drive**



**Snowthrower collector auger**

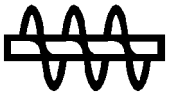

**Machine travel direction – forward**



**Machine travel direction – rearward**



**On/start**



**Off/stop**

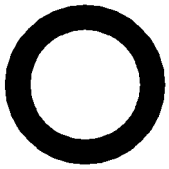

**Fast**



**Slow**



**Decreasing/Increasing**



**Engine start**

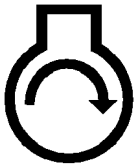

**Engage**

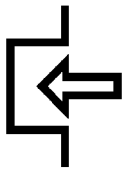

**Disengage**

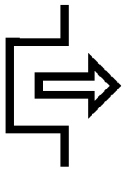

**Choke**

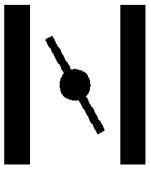

**Engine speed (Throttle)**



**Neutral**




**Snowthrower collector auger/impeller**



**Lock**



**Unlock**



**Engine stop**




**Snowthrower chute direction**



**Primer (start aid)**

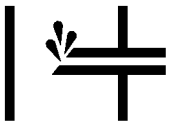

**Primer operation**

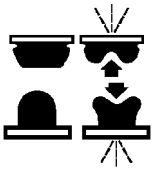

**Throttle operation**

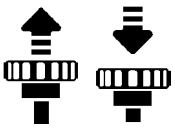

**PowerShift operation**

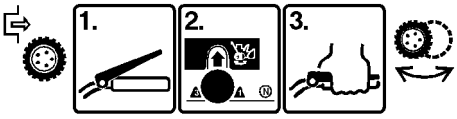


**Belt routing**

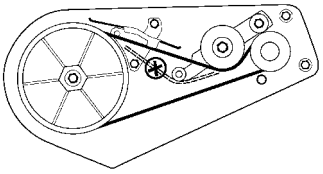

**Lever operation**

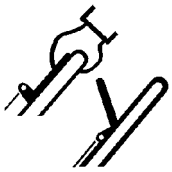

**Lever operation**



**Unleaded fuel**




**Cutting of fingers or hand**



**Cutting of foot**



# Assembly

**Note:** Determine the left and right sides of the snowthrower by standing in the normal operating position.

## Loose Parts

| DESCRIPTION | QTY. | USE |
|---|---|---|
| Short spacer (right side) | 1 | Installing the wheels |
| Long spacer (left side) | 1 | |
| Pushnuts | 2 | |
| Wheels | 2 | |
| Carriage bolts | 3 | Installing the discharge chute |
| Locknuts | 3 | |
| Washers | 3 | |
| Discharge chute | 1 | |
| Chute handle (Models 38428 and 38429 only) | 1 | |
| Plastic bushing | 1 | Installing the chute crank (Models 38441 and 38442 only) |
| Cap screws | 2 | |
| Locknuts | 2 | |
| Chute crank and mounting bracket | 1 | |
| Knobs | 2 | Installing the handle |
| Curved washers | 2 | |
| Cable guide | 1 | |
| Handle locks | 2 | |
| Control bar | 1 | |
| Upper handle | 1 | |
| Spring | 1 | Installing the control cable |
| Spring cover | 1 | |
| Cable adjuster | 1 | |
| Control cable | 1 | |

## Installing the Wheels

1. Turn the snowthrower onto its left side and place a wood block under the left axle end (Fig. 2).

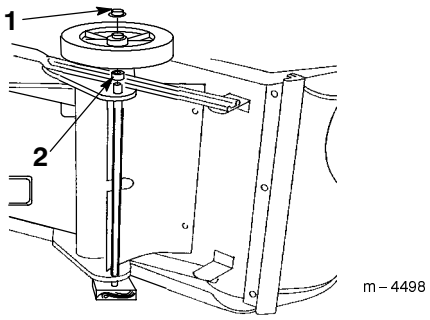


**Figure 2**

1. Pushnut
2. Short spacer

2. Slide the **short** spacer and a wheel onto the right axle end (Fig. 2).

   **Note:** The side of the wheel with six spokes must face downward.

3. Slide a pushnut onto the end of the axle (Fig. 2).
4. Strike the pushnut with a hammer to seat it **firmly** in place.
5. Turn the snowthrower over onto its right side and place a wood block under the right axle end.
6. Slide the **long** spacer and a wheel onto the left axle end (Fig. 3).

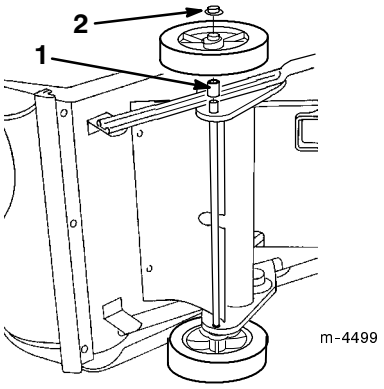


**Figure 3**

1. Long spacer
2. Pushnut

   **Note:** The side of the wheel with six spokes must face downward.

7. Repeat steps 3 and 4.

# Installing the Handle

1. Cut the tie that secures the control cable to the lower handle.
2. Install the control bar on the upper handle as shown in Figure 4 (models 38428 and 38429) or Figure 5 (models 38441 and 38442).

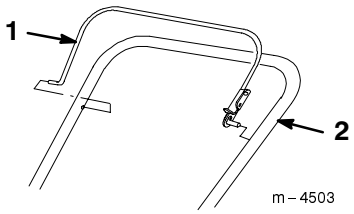


**Figure 4**

1. Control bar
2. Upper handle

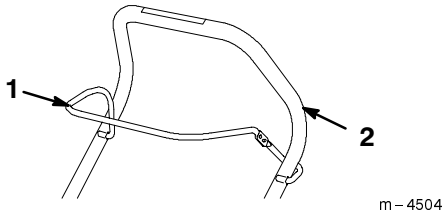


**Figure 5**

1. Control bar
2. Upper handle

3. Install the upper handle as illustrated in Figure 6.

**IMPORTANT:** You must route the control cable through the cable guide before you tighten the handle lock (Fig. 6).

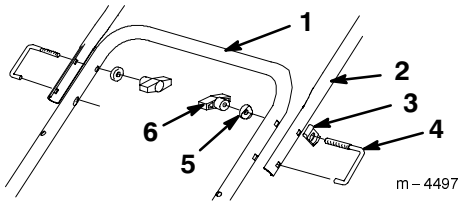


**Figure 6**

1. Lower handle
2. Upper handle
3. Cable guide
4. Handle lock (2)
5. Curved washer (2)
6. Knob (2)

# Installing the Discharge Chute

## Models 38428 and 38429 only

1. Place the chute handle over the chute ring (Fig. 7).

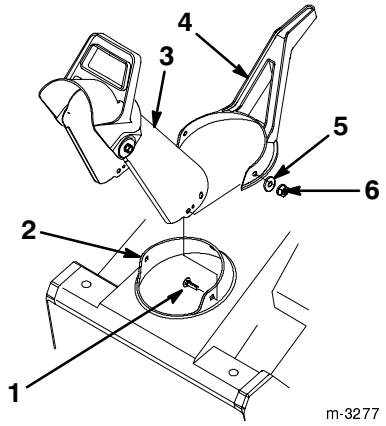


**Figure 7**

1. Carriage bolt (3)
2. Chute ring
3. Discharge chute
4. Chute handle
5. Washer (3)
6. Locknut (3)

2. Insert the discharge chute between the chute ring and the chute handle. (Fig. 7).
3. Align the hole in the back of the chute with the center hole in the ring.

   **Note:** You can rotate the chute ring for easier assembly.
4. Install a carriage bolt, a washer, and a locknut through the center holes, with the washer and the locknut on the outside.
5. Install the carriage bolts, the washers, and locknuts through the remaining holes, with the washers and the locknuts on the outside.
6. Tighten all locknuts **securely**.

## Models 38441 and 38442 only

1. Set the discharge chute over the chute ring (Fig. 8).

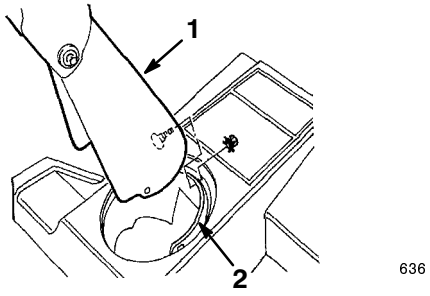


**Figure 8**

1. Discharge chute
2. Chute ring

2. Align the hole in the back of the chute with the center hole in the ring (Fig. 8).
3. Install a carriage bolt and a locknut through the center holes, with the locknut on the outside (Fig. 8).

   **Note:** You can rotate the chute ring for easier assembly.
4. Install the carriage bolts and the locknuts through the remaining holes, with the locknuts on the outside.
5. Tighten all locknuts **securely**.

# Installing the Chute Crank

## Models 38441 and 38442 only

1. Insert the flattened end of the chute crank through the hole in the shroud while aligning the mounting bracket with the holes in the lower handle (Fig. 9).

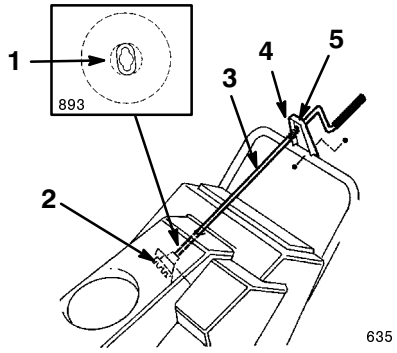


**Figure 9**

1. Chute crank
2. Mounting bracket
3. Gear
4. Plastic bushing
5. Hidden gear opening

2. Slowly rotate the crank until the flattened end fits into the hidden gear opening and the chute ring turns with the crank (Fig. 9).

3. Fully insert the plastic bushing into the hole in the mounting bracket (Fig. 9).

4. Secure the mounting bracket to the handle with two cap screws and locknuts (Fig. 9).

# Installing the Control Cable

## Models 38428 and 38429 only

1. Route the control cable through the cable guide on the left side of the snowthrower (Fig. 10).

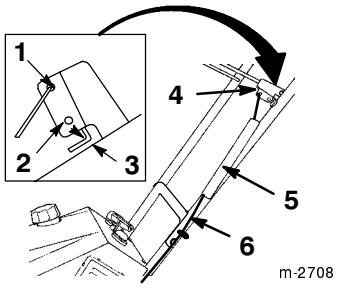


**Figure 10**

1. Top hole
2. Bottom hole
3. 1/16 to 1/8 inch (1.6 to 3.2 mm) gap
4. Control bar bracket
5. Spring cover
6. Control cable

2. Hook the spring to the round hole at the end of the cable adjuster (Fig. 11).

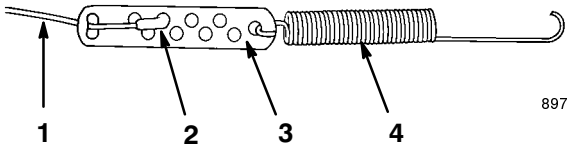


**Figure 11**

1. Cable
2. Z-fitting
3. Cable adjuster
4. Spring

3. Secure the end of the cable to the cable adjuster as illustrated in Figure 11.

4. Slide the spring cover over the spring and the cable adjuster, and push the spring end through the hole at the end of the spring cover (Fig. 10).

5. Squeeze the control bar together and remove it from the handle.

6. Insert the loose end of the control cable into the top hole of the control bar as illustrated in Figure 10.

7. Squeeze the control bar and insert it into the handle.

8. Move the control bar back toward the handle to remove the slack in the cable.

9. Make sure that a 1/16 to 1/8 inch (1.6 to 3.2 mm) gap exists between the control bar and the handle (Refer to the inset in Fig. 10). To adjust this gap, refer to *Adjusting the Control Bar* on page 17.

**IMPORTANT: The control cable must contain slack when you disengage the control bar.**

## Models 38441 and 38442 only

1. Insert the upper end of the control cable into the bottom hole in the control bar bracket (Refer to the inset in Fig. 12).

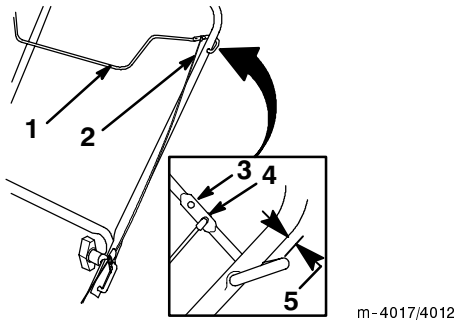


**Figure 12**

1. Control bar bracket
2. Cable
3. Top hole
4. Bottom hole
5. 1/16 to 1/8 inch (1.6 to 3.2 mm) gap

2. Move the control bar back toward the handle to remove the slack in the cable.

3. Make sure that a 1/16 to 1/8 inch (1.6 to 3.2 mm) gap exists between the control bar and the handle (Refer to the inset in Fig. 12). To adjust this gap, refer to *Adjusting the Control Cable* on page 17.

**IMPORTANT: The control cable must contain slack when you disengage the control bar.**

# Before Starting

## Mixing Gasoline and Oil

Your Toro snowthrower is powered by a two-cycle engine that requires a 50:1 gasoline-to-oil mixture.

Use only clean, fresh, unleaded gasoline (including oxygenated or reformulated gasoline) with an octane rating of 87 or higher. To ensure freshness, purchase only the amount of gasoline you expect to use in 30 days. Using unleaded gasoline results in fewer combustion chamber deposits and longer spark plug life.

**IMPORTANT: Do not use methanol, gasoline containing methanol, gasohol containing more than 10% ethanol, premium gasoline, or white gas. Using these fuels can damage the engine's fuel system.**

**IMPORTANT: Do not use an automotive oil (such as SAE 30 or 10W30), a two-cycle oil that is not NMMA- or TCW-certified, or a fuel mixed at the wrong gasoline-to-oil ratio. This can cause engine damage not covered under the Toro warranty.**

**DANGER**

**POTENTIAL HAZARD**
- **In certain conditions gasoline is extremely flammable and highly explosive.**

**WHAT CAN HAPPEN**
- **A fire or explosion from gasoline can burn you and others and cause property damage.**

**HOW TO AVOID THE HAZARD**
- **Fill the fuel tank outdoors, in an open area, and when the engine is cold. Wipe up any gasoline that spills.**
- **Do not fill the fuel tank completely full. Add gasoline to the fuel tank until the level is 1/4 to 1/2 inch (6 to 13 mm) below the bottom of the filler neck. This empty space in the tank allows the gasoline to expand.**
- **Never smoke when handling gasoline, and stay away from an open flame or where a spark may ignite gasoline fumes.**
- **Store gasoline in an approved fuel container and keep it out of the reach of children.**
- **Never buy more than a 30-day supply of gasoline.**

**DANGER**

**POTENTIAL HAZARD**
- **When fueling, under certain circumstances, a static charge can develop, igniting the gasoline.**

**WHAT CAN HAPPEN**
- **A fire or explosion from gasoline can burn you and others and cause property damage.**

**HOW TO AVOID THE HAZARD**
- **Always place gasoline containers on the ground away from your vehicle before filling.**
- **Do not fill gasoline containers inside a vehicle or on a truck or trailer bed because interior carpets or plastic truck bed liners may insulate the container and slow the loss of any static charge.**
- **When practical, remove gas-powered equipment from the truck or trailer and refuel the equipment with its wheels on the ground.**
- **If this is not possible, then refuel such equipment on a truck or trailer from a portable container, rather than from a gasoline dispenser nozzle.**
- **If you must use a gasoline dispenser nozzle, keep the nozzle in contact with the rim of the fuel tank or container opening at all times until fueling is complete.**

**Note:** Use a fuel stabilizer/conditioner for all Toro gasoline-powered products during operation and storage. A fuel stabilizer/conditioner cleans the engine during operation and prevents gum-like varnish deposits from forming in the engine during storage. A fuel stabilizer/conditioner works best when you mix it with fresh gasoline. If you use *Toro Heavy Duty 50:1 All Season 2-Cycle Engine Oil with Fuel Stabilizer*, you do not need to add a fuel stabilizer/conditioner.

**IMPORTANT: Do not use fuel additives except a fuel stabilizer during storage. Do not use fuel stabilizers with an alcohol base such as ethanol, methanol, or isopropanol.**

1. Pour a half gallon (1.9 liters) of fresh, unleaded gasoline into an approved gasoline container.

**Note:** Do not mix gasoline and oil in the fuel tank. Oil at room temperature mixes easier and more thoroughly than cold oil. Oil below 32°F (0°C) requires additional mixing.

2. Add the full amount of *Toro Heavy Duty 50:1 All Season 2-Cycle Engine Oil with Fuel Stabilizer* or an equivalent high grade, NMMA- or TCW-certified two-cycle oil to the gasoline according to the chart below:

| 50:1 Gasoline-to-Oil Ratio Mixing Chart | |
|---|---|
| Gasoline | Oil |
| 1 gallon (4 liters) | 2.5 ounces (80 ml) |
| 2 gallons (8 liters) | 5 ounces (160 ml) |
| 5 gallons (20 liters) | 13 ounces (400 ml) |

3. Install the cap on the gasoline container.
4. Shake the container to mix the gasoline and oil thoroughly.
5. Slowly remove the cap and add the remaining amount of gasoline.

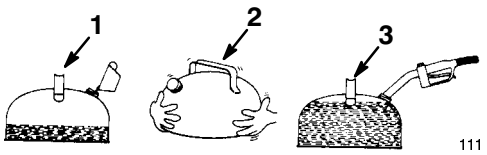


**Figure 13**

1. Add oil to half of the gasoline
2. Install the cap and shake the can to mix
3. Add the remaining amount of gasoline

## Filling the Fuel Tank with Gasoline-and-Oil Mixture

**IMPORTANT: Do not overfill the fuel tank. The gasoline-and-oil mixture must have room to expand.**

1. Clean around the fuel tank cap.
2. Remove the fuel tank cap and fill the fuel tank with the gasoline-and-oil mixture to within 1/4 inch (6 mm) from the top of the tank. **Do not fill into the filler neck.**
3. Install the fuel tank cap securely and wipe up any spilled fuel.

# Operation

## Operating Controls

The snowthrower control panel contains a key switch, a primer, a recoil starter, and an electric start button (electric start models only). The choke is just below the control panel (Fig. 14).

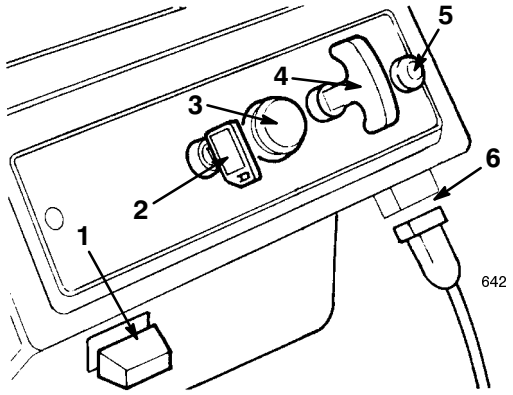


**Figure 14**

1. Choke
2. Key switch
3. Primer
4. Recoil start
5. Electric start button (electric start models only)
6. Cord connection (electric start models only)

## Starting the Engine

1. Turn the key to the *On* position and pull the choke out.
2. Cover the hole in the center of the primer with your thumb and push the primer in twice. In extremely cold temperatures, repeat this step as necessary.

   **Note:** Do not use the choke and the primer when starting a warm engine.
3. **For a recoil starter:** Hold the snowthrower with one hand and pull the recoil starter vigorously with the other hand.

   **For an electric starter:**

   A. Connect the power cord to the snowthrower and to a standard household power outlet.

**CAUTION**

**POTENTIAL HAZARD**
- **If you leave the snowthrower plugged into a power outlet, someone can inadvertently start the snowthrower.**

**WHAT CAN HAPPEN**
- **Someone can become injured or property damage can occur.**

**HOW TO AVOID THE HAZARD**
- **Unplug the power cord whenever you do not use the snowthrower.**

   B. Push the starter button.

Run the electric starter no more than ten times at intervals of five seconds on, then five seconds off. If the engine does not start after this attempt, wait at least 40 minutes to allow the starter to cool before attempting to start it again.

**IMPORTANT: Running the electric starter extensively can overheat and damage the starter.**

If the engine does not start after the second attempt, bring the snowthrower to an Authorized Service Dealer for service.

C. When the engine starts, disconnect the power cord from the snowthrower and the outlet.

**4.** With the engine running, push in the choke slowly.

# Stopping the Engine

Turn the key to the *Off* position, and wait for all moving parts to stop before leaving the operating position.

# Starting the Rotor Blades

To start the rotor blades, squeeze the control bar and handle together.

# Stopping the Rotor Blades

Release the control bar to stop the rotor blades.

**Note:** When you release the control bar, the rotor blades stop, but the engine continues to run.

# Adjusting the Discharge Chute

## Models 38428 and 38429 only

Move the chute handle left and right to adjust the direction of the snow stream (Fig. 15). The chute deflector handle on top of the discharge chute controls the height of the snow stream. **Do not overtighten the chute deflector mounting locknuts.**

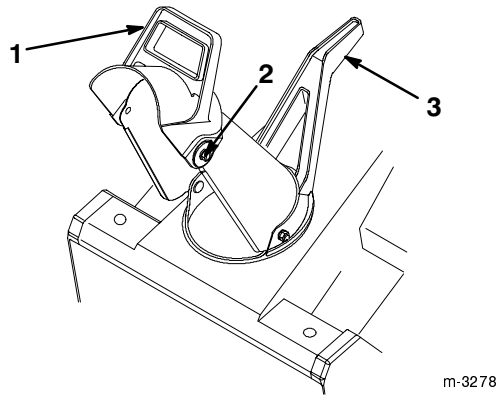


**Figure 15**

1. Chute deflector handle
2. Deflector mounting locknuts
3. Chute handle

**IMPORTANT: Do not use the chute handle to lift the snowthrower. This can damage the chute handle.**

## Models 38441 and 38442 only

Rotate the chute crank clockwise to move the discharge chute to the right or counterclockwise to move the chute to the left (Fig. 16). The chute deflector handle on top of the discharge chute controls the height of the snow stream. **Do not overtighten the chute deflector mounting locknuts.**

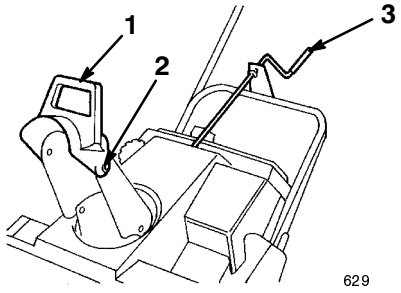


**Figure 16**

1. Chute deflector handle
2. Deflector mounting locknuts
3. Chute crank

## Snowthrowing Tips

**WARNING**

**POTENTIAL HAZARD**
- **Stones, toys and other foreign objects may be picked up and thrown by the rotor blades.**

**WHAT CAN HAPPEN**
- **Thrown objects can cause serious personal injury to operator or to bystanders.**

**HOW TO AVOID THE HAZARD**
- **Keep the area to be cleared free of all objects that could be picked up and thrown by rotor blades.**
- **Keep all children and pets away from the area of operation.**

- Remove snow as soon as possible after it falls. This produces the best snow removal results.
- The snowthrower clears down to the ground and propels itself forward when you raise the handle. The snowthrower tilts **slightly** forward so that the rotor blades strike the ground. The wheels do not need to touch the ground to self-propel. The more you tilt the handle forward, the faster the snowthrower self-propels.
- Overlap each swath to ensure complete snow removal.
- Discharge the snow downwind whenever possible.
- To clear snow from crushed rock or gravel, push down on the handle to raise the rotor blades clear of the loose material and push the snowthrower forward.
- In snowy and cold conditions, some controls and moving parts may freeze. **Do not use excessive force when trying to operate frozen controls.** If you have difficulty operating any control or part, start the engine and let it run for a few minutes.
- After clearing the snow, let the engine run for a few minutes to prevent moving parts from freezing. Shut off the engine and remove all ice and snow from the snowthrower.
- **On models 38441 and 38442:** Operate the chute crank several times to remove any ice and snow.

# Maintenance

## Recommended Maintenance Schedule

| Service Item | Service Operation | Initial | Annually | Comments |
|---|---|---|---|---|
| Tighten fasteners | Check and for loose fasteners and tighten them if necessary. | X | X | Tighten fasteners as needed. |
| Control cable | Check the control cable. Adjust if necessary. | X | X | Check and adjust as needed. |
| Scraper | Check the scraper. Replace if necessary. | | X | |
| Rotor blades | Inspect the rotor blades. Replace if necessary. | | X | |
| Spark plug | Clean, inspect, and gap. Replace if necessary. | | X | |
| Drive belt | Inspect the drive belt. Replace if necessary. | | X | |
| Fuel tank | Drain the fuel and run the engine until the fuel tank and the carburetor are dry. | | X | |

**CAUTION**

**POTENTIAL HAZARD**
- **If you leave the wire on the spark plug, someone could start the engine.**

**WHAT CAN HAPPEN**
- **Someone accidentally starting the engine could seriously injure you or other bystanders.**

**HOW TO AVOID THE HAZARD**
- **Disconnect the wire from the spark plug before you do any maintenance. Set the wire aside so that it does not accidentally contact the spark plug.**

# Adjusting the Control Cable

Periodically check the control cable for proper adjustment.

1. Stop the engine and wait for all moving parts to stop.
2. Move the control bar back toward the handle to remove the slack in the cable (Fig. 10 or Fig. 12).
3. Make sure that a 1/16 to 1/8 inch (1.6 to 3.2 mm) gap exists between the control bar and the handle. Refer to the inset in Figure 10 (models 38428 and 38429) or in Figure 12 (models 38441 and 38442). To adjust the cable, go to step 4.

   **Note:** The control cable must have slack in it when you disengage the control bar.

4. Adjust the cable as follows:

   **Models 38428 and 38429 only:**

   A. Unhook the spring end from the top hole in the control bar bracket (Fig. 10).

   B. Slide the spring cover off the spring and the cable adjuster.

   C. Unhook the Z-fitting from the cable adjuster (Fig. 11) and position the Z-fitting in a higher or lower hole on the adjuster to obtain a proper gap of 1/16 to 1/8 inch (1.6 to 3.2 mm) between the control bar bracket and the handle (Fig. 10).

   D. Install the spring cover over the cable adjuster and the spring.

   E. Hook the spring into the top hole of the control bar bracket.

   **Models 38441 and 38442 only:**

   A. Unhook the upper cable end from the hole in the control bar bracket (Fig. 12).

   B. Slide the spring cover up the cable to expose the cable adjuster (Fig. 17).

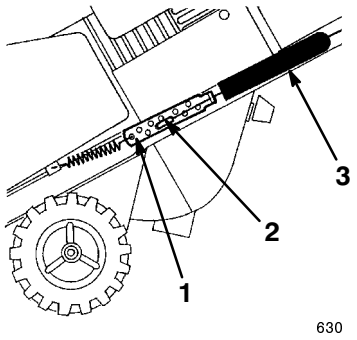


**Figure 17**

1. Cable adjuster
2. Z-fitting
3. Spring cover

   C. Unhook the Z-fitting from the cable adjuster (Fig. 11) and position it in a higher or lower hole on the adjuster to obtain a gap of 1/16 to 1/8 inch (1.6 to 3.2 mm) between the control bar bracket and the handle (Fig. 12).

   D. Install the spring cover over the cable adjuster.

   E. Install the upper cable end into the bottom hole in the control bar bracket.

5. Check the adjustment (refer to steps 2 and 3 above).

After extended use, the drive belt may wear and lose its proper belt tension. Improper belt tension causes the belt to slip and decreases the performance under a heavy load. Belt slippage may occur after two or three seasons of normal usage (10 to 15 hours). If the drive belt slips (continuously squeals) under a heavy load, increase the belt tension by doing one of the following steps:

- **For Models 38428 and 38429:** Position the spring end in the bottom hole of the control bar bracket (Fig. 10).
- **For Models 38441 and 38442:** Position the upper cable end into the upper hole of the control bar bracket (Fig. 12).

Using the incorrect adjusting hole in the control bar bracket can reduce the drive belt life. Occasional belt slippage (squealing) may occur in extremely wet conditions due to moisture in the drive system. To remove

moisture, start the rotor and operate it without a load for 30 seconds. Once you remove the moisture, the drive belt should not slip.

## Replacing the Scraper

Before each season, inspect the scraper for wear. If the thickness of the scraper's bottom is less than 1/16 inch (1.6 mm), replace the scraper (Fig. 18).

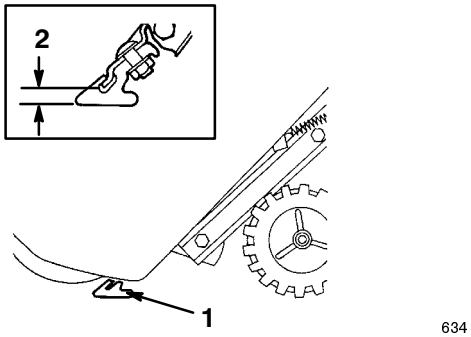


**Figure 18**

1. Scraper
2. 1/16 inch (1.6 mm)

**Note:** The running time and the roughness of the driveway or sidewalk determines the scraper wear rate.

1. Stop the engine and wait for all moving parts to stop.
2. Remove the key from the switch.
3. Remove the three screws that secure the control panel to the housing (Fig. 19).

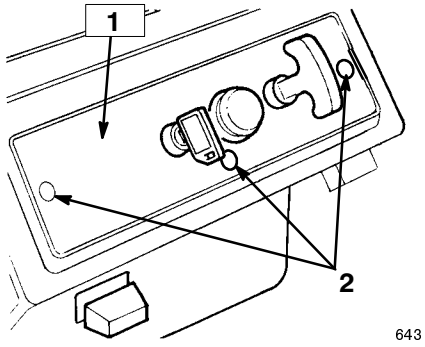


**Figure 19**

1. Control panel
2. Mounting screws

4. Lift off the control panel and allow it to hang on the recoil rope.
5. Disconnect the wire from the spark plug (Fig. 20).

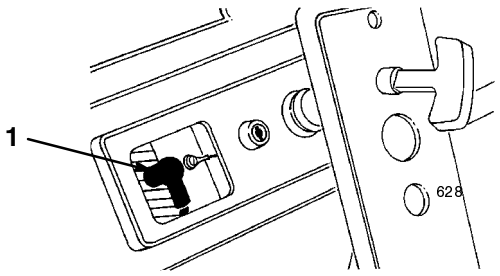


**Figure 20**

1. Spark plug wire

6. Drain the fuel from the fuel tank. Refer to *Emptying the Fuel Tank* on page 21.
7. Tip the snowthrower forward onto its front housing.
8. Remove the three carriage bolts and the locknuts that hold the scraper in place (Fig. 21).

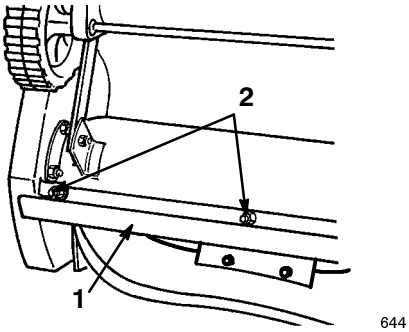


**Figure 21**

1. Scraper
2. Carriage bolts and locknuts (3)

9. Remove the scraper by sliding it to the right and down.
10. Install the new scraper to the housing using the carriage bolts and the locknuts.
11. Connect the wire to the spark plug.
12. Install the control panel with the screws.
13. Insert the key in the switch.

## Replacing the Rotor Blades

Before each season, inspect the rotor blades for wear. When a rotor blade edge has worn to the wear indicator hole (Fig. 22), replace **both** rotor blades to ensure proper performance and to prevent damage to the underside of the snowthrower.

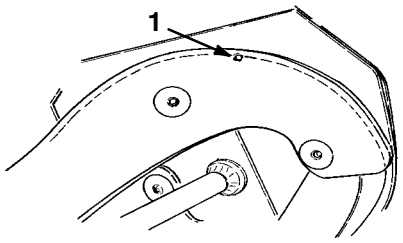


**Figure 22**

1. Wear indicator hole

**Note:** Replace the scraper whenever you replace the rotor blades. This ensures proper snowthrower operation and performance.

**Note:** The running time and the roughness of the driveway or the sidewalk determines the wear rate of the rotor blades.

## Removing the Old Blade

**Note:** You will need a No. T27 torx driver to complete this procedure.

1. Remove the four torx screws and the four locknuts that secure the outer edges of the rotor blade to the rotor shaft assembly (Fig. 23).

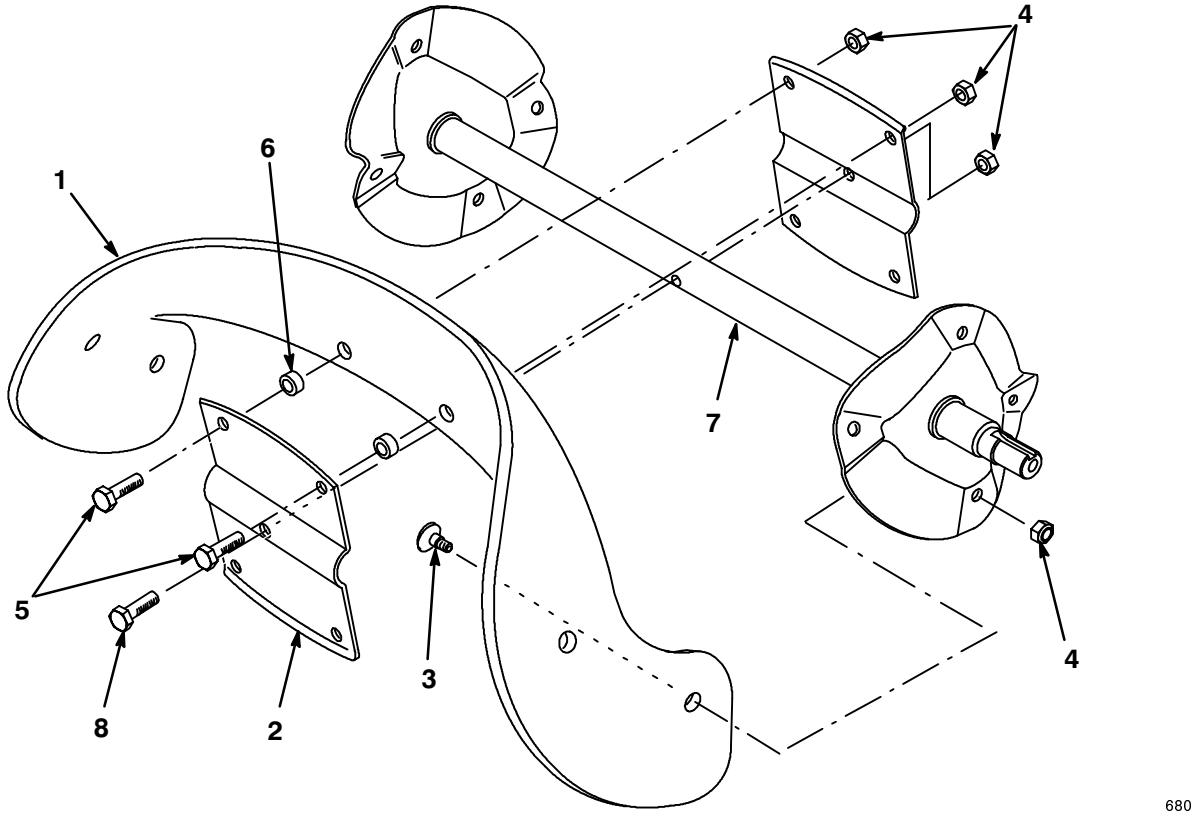


**Figure 23**

1. Rotor blade
2. Rotor half
3. Torx screw
4. Locknut
5. Hex-head cap screw
6. Spacer
7. Auger shaft assembly
8. Hex-head screw

2. Remove the two hex-head capscrews, two spacers, and two locknuts that secure the center of the blade to the rotor halves (Fig. 23).
3. Loosen the hex-head screw that secures the rotor halves to the auger shaft assembly (Fig. 23).
4. Slide the blade out from between the rotor halves (Fig. 23).

### Installing a New Blade

1. Examine a new rotor blade edge for the difference in layer thickness (Fig. 24). Some rotor blades have a part number on the thick side of the blade.

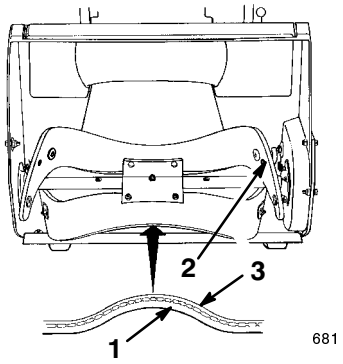


**Figure 24**

1. Thin layer
2. Thick layer
3. Wear indicator hole

Install the rotor blades with the thick layer on the **inside** of the curve. (Fig. 24). If you do not install the blades properly, the blades may be out of balance and cause the snowthrower to “hop” or “bounce.”

2. Insert the new rotor blade between the rotor halves.
3. Secure the rotor blade to the rotor halves with two hex-head capscrews, two spacers, and two locknuts, positioning the bolt heads on the thick side of the blade (Fig. 24).
4. Curve the rotor blade and secure it with the remaining torx screws and locknuts, positioning the screw heads on the thick side of the blade (Fig. 24).
5. Tighten all screws and locknuts securely.

## Replacing the Spark Plug

Before each season, check the spark plug. If the electrodes in the center of the plug are dark or have deteriorated, install a new *NGK BPMR4A* spark plug.

1. Remove the three mounting screws that secure the control panel to the housing (Fig. 20).
2. Remove the ignition key and lift off the panel, allowing it to hang on the recoil rope.
3. Disconnect the wire from the spark plug and remove the spark plug (Fig. 21).
4. Examine the spark plug and replace it if it is cracked, fouled, or dirty.

**IMPORTANT: Do not sandblast, scrape, or clean the spark plug. Dirt may fall into the cylinder and cause engine damage.**

5. Set the spark plug gap (Fig. 25) between the electrodes to .032 inches (.81 mm).

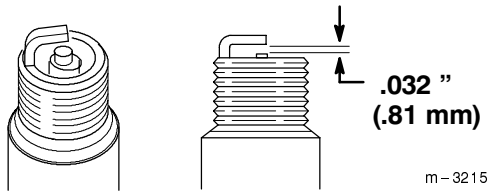


**Figure 25**

6. Install the spark plug and torque it to 15 ft-lb (20.4 N·m). If you do not have a torque wrench, tighten the plug firmly.
7. Connect the wire to the spark plug.
8. Install the control panel with the capscrews.

## Replacing the Drive Belt

Inspect the drive belt before each season, and replace it if it is worn or damaged.

1. Stop the engine and wait for all moving parts to stop.
2. Remove the key from the switch.
3. Remove the three screws that secure the control panel to the housing (Fig. 20).
4. Lift off the control panel and allow it to hang on the recoil rope.
5. Disconnect the wire from the spark plug (Fig. 21).
6. Remove three self tapping screws, two capscrews, one washer, and two locknuts that secure the belt cover to the snowthrower frame (Fig. 26). Set the drive belt cover aside.

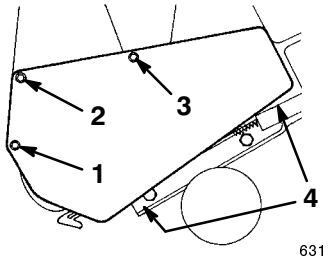


**Figure 26**

1. Cap screw and locknut
2. Cap screw, locknut, and washer
3. Long self tapping screw
4. Short self tapping screws

7. Pull up on the idler pulley and remove the drive belt from the rotor pulley, the brake arm assembly, and the engine pulley (Fig. 27).

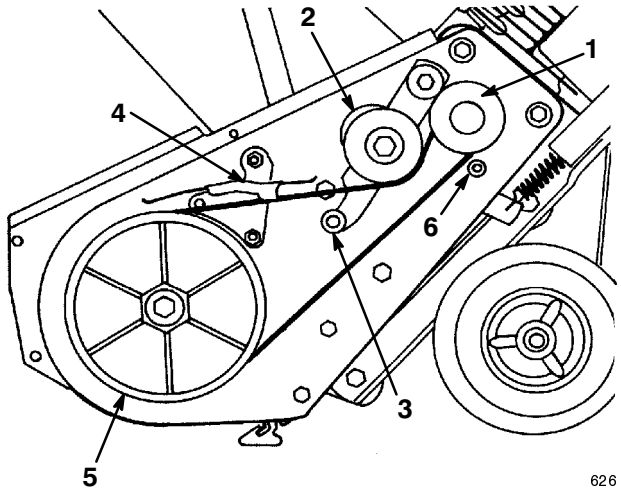


**Figure 27**

1. Engine pulley
2. Idler pulley
3. Roller
4. Brake arm assembly
5. Rotor pulley
6. Belt guide

8. Loop the new drive belt around the engine pulley, under the idler pulley, over the roller, through the brake assembly, and around the rotor pulley (Fig. 27).

**IMPORTANT:** The drive belt must be on top of the roller as shown in Figure 27.

9. Install the drive belt cover. Tighten the fasteners securely, but **do not overtighten**.
10. Connect the wire to the spark plug.
11. Insert the key in the switch.

## Emptying the Fuel Tank

1. Stop the engine and wait for all moving parts to stop.
2. Remove the key from the switch.
3. Remove the fuel tank cap and use a pump-type syphon to drain the fuel into a clean gasoline container.
4. Start the engine and allow it to run until it consumes all the fuel in the fuel tank and stops running. Repeat this step two more times to remove all the fuel in the fuel tank and carburetor.

# Troubleshooting

Toro designed and built your snowthrower for trouble-free operation. Check the following components and items carefully, and refer to *Maintenance* on page 16 for more information. If a problem continues, see your Authorized Service Dealer.

| PROBLEM | POSSIBLE CAUSES | CORRECTIVE ACTION |
|---|---|---|
| Electric starter does not crank (electric start models only) | 1. The power cord is disconnected at the outlet or the snowthrower.<br>2. The power cord is worn, corroded, or damaged.<br>3. The power outlet is not energized. | 1. Connect the power cord to the outlet and/or the snowthrower.<br>2. Replace the power cord.<br>3. Have a qualified electrician energize the power outlet. |
| Engine does not start or starts hard | 1. The key is not in the ignition or is in the *Off* position.<br>2. The choke is in the *Off* position and the primer has not been pressed.<br>3. The fuel tank is empty or the fuel system contains stale fuel.<br>4. The spark plug wire is loose or disconnected.<br>5. The spark plug is pitted, fouled, or the gap is incorrect.<br>6. The fuel cap vent is restricted. | 1. Insert the key into the ignition and turn it to the *On* position.<br>2. Move the choke to the *On* position and press the primer two times.<br>3. Drain and/or fill the fuel tank with a fresh gasoline-and-oil mixture (not more than 30 days old). If the problem persists, contact your Authorized Service Dealer.<br>4. Connect the wire to the spark plug.<br>5. Clean the spark plug and check and adjust the spark plug gap. Replace the spark plug if it is damaged.<br>6. Remove the vent restriction or replace the fuel cap. |
| Engine runs rough | 1. The choke is in the *On* position.<br>2. The fuel system contains stale fuel.<br>3. The spark plug wire is loose.<br>4. The spark plug is pitted, fouled, or the gap is incorrect. | 1. Move the choke to the *Off* position.<br>2. Drain and fill the fuel tank with a fresh gasoline-and-oil mixture (not more than 30 days old). If the problem persists, contact your Authorized Service Dealer.<br>3. Connect the wire to the spark plug.<br>4. Clean the spark plug and check and adjust the spark plug gap. Replace the spark plug if it is damaged. |

| PROBLEM | POSSIBLE CAUSES | CORRECTIVE ACTION |
|---|---|---|
| Engine runs, but the snowthrower discharges snow poorly or not at all | 1. You are walking too fast or too slow. | 1. Change your walking speed. |
| | 2. You are trying to remove too much snow per swath. | 2. Reduce the amount of snow removed per swath. |
| | 3. You are trying to remove extremely heavy or wet snow. | 3. Don't overload the snowthrower with extremely heavy or wet snow; walk more slowly. |
| | 4. The discharge chute is plugged. | 4. Stop the engine, wait for all moving parts to stop, and use a stick to remove the snow from the discharge chute. |
| | 5. The control cable is improperly adjusted or broken (models with clutch only). | 5. Adjust or replace the control cable. |
| | 6. The drive belt is loose or is off the pulley. | 6. Install the drive belt and/or adjust the control cable. |
| | 7. The drive belt is worn or broken. | 7. Replace the drive belt. |
| | 8. The rotor blades are worn. | 8. Replace the rotor blades. |
| Snowthrower does not properly clear snow off the surface | 1. The snow on the surface to be cleared is compacted down. | 1. Throw the snow off the surface before it becomes compacted. |
| | 2. The front of the snowthrower is not down. | 2. Lift up on the handle to hold down the front of the snowthrower. |
| | 3. The scraper is excessively worn. | 3. Replace the scraper. |
| | 4. The rotor blades are excessively worn. | 4. Replace the rotor blades. |
| Snowthrower does not self-propel | 1. The front of the snowthrower is not down. | 1. Lift up on the handle to hold down the front of the snowthrower. |
| | 2. The rotor blades are excessively worn. | 2. Replace the rotor blades. |
| Rotor blades do not stop properly | 1. The control cable is improperly adjusted (models with clutch only). | 1. Adjust the control cable. |

# Storage

**IMPORTANT: Store the snowthrower in its operating position and on its wheels. Storing the snowthrower on its front housing may cause hard starting.**

**WARNING**

**POTENTIAL HAZARD**

- **Gasoline fumes are highly flammable, explosive, and dangerous if inhaled.**

**WHAT CAN HAPPEN**

- **If the product is stored in an area with an open flame, the gasoline fumes may be ignited, causing an explosion.**

**HOW TO AVOID THE HAZARD**

- **Do not store the snowthrower in a house (living area), basement, or any other area where ignition sources may be present, such as hot water and space heaters, clothes dryers, furnaces, and other like appliances.**

# Preparing the Fuel System

1. Add a fuel stabilizer/conditioner to the fuel in the fuel tank as directed.

**Note:** If you use *Toro 50:1 All Season 2-Cycle Engine Oil with Fuel Stabilizer*, you do not need to add a fuel stabilizer/conditioner.

2. Run the engine for five minutes to distribute the conditioned fuel through the fuel system.
3. Stop the engine, allow it to cool, and drain the fuel tank, or run the engine until it stops.
4. Start the engine and run it until it stops.
5. Choke or prime the engine, start it a third time, and run the engine until it will not start.
6. Dispose of unused fuel properly. Recycle it according to local codes, or use it in your automobile.

**Note:** Do not store stabilized gasoline for more than 90 days.

# Preparing the Engine

This procedure allows you to close both the intake and exhaust ports of the engine, preventing cylinder bore corrosion.

1. Slowly pull the recoil starter until you feel resistance due to compression pressure, then stop.
2. Release the starter tension slowly to prevent the engine from reversing due to compression pressure.

# Preparing the Snowthrower

1. Tighten all loose screws, bolts, and locknuts. Repair or replace any damaged parts.
2. Clean the snowthrower thoroughly.
3. Cover the snowthrower and store it in a clean, dry place out of the reach of children. Allow the engine to cool before storing it in any enclosure.