Form No. 3324–645

522

Snowthrower

Model No. 38051—210000001 and Up

Parts Catalog

Ordering Replacement Parts

To order replacement parts, please supply: the part number, the quantity, and the description of each part desired.

Understanding Reference Numbers

Each identified part in an illustration has a reference number. The reference number for a part also appears in the parts list, along with other information about the part.

This catalog uses two special reference number formats, one to indicate parts in a service assembly and another to indicate the quantity of a given part in an illustration.

Service Assembly Reference Numbers

Parts in service assemblies have reference numbers in the form **a:b.** The **a** represents the reference number of the entire service assembly and the **b** represents a sequential number unique to each part within the service assembly.

For example, a wheel assembly might be identified by reference number **6**, the tire by **6:1**, the valve by **6:2**, and the wheel by **6:3**. When you order the assembly identified by reference number 6, you receive all parts identified by reference numbers 6:1, 6:2, and 6:3. However, you may also order any part individually.

Reference numbers of this type appear in illustrations and in part lists.

Reference Numbers Indicating Quantity

In an illustration, if a reference number indicates more than one part, the reference number has the form **nX y.** The **n** represents the quantity of the part, the **X** is the multiplication symbol, and the **y** represents the reference number.

For example, in an illustration, the reference number **2X 37** means that two of the parts identified by reference number 37 are indicated.

© The TORO Company — 2000
All Rights Reserved

Contents

Description	Page
Chute and Auger Assembly	3
22” Gear Case Assembly No. 37–6962	4
Traction Assembly	5
Traction Assembly (Continued)	6
Engine Assembly	7
Handle Assembly	8
Linkage and Traction Assembly	9
Engine Tecumseh Model HSSK50–67401S	10
Rewind Starter No. 590742	14
Starter Motor No. 33290E	15
Carburetor No. 640084A	16

Accessories

Description	Model / Part No.
110 Vac Electric Starter Kit	38036
Tire Chain Kit	56–2700
Drift Breaker Kit	37–7022
Snow Cab	88–0600

Part Description Abbreviations

Part descriptions in this catalog may include the following abbreviations.

Abbreviation	Meaning
AR	as required
ASM	assembly
CARR	carriage
DEG	degrees
FH	flat head
GA	gauge
HF	hex flange
HH	hex head
HHF	hex head flange
HLH	hex lag head
HJ	hex jam
HOC	height-of-cut
HS	hex socket
HSBH	hex socket button head
HSFH	hex socket flat head
HSH	hex socket head
HWH	hex washer head
HWHTF	hex washer head thread forming
INC	incorporated
LH	left hand
NI	nylon insert
PPH	Phillips pan head
PTH	Phillips truss head
PTO	power take off
RH	right hand
SFH	slotted fillister head
SHH	slotted hex head
SQH	square head
SHWH	slotted hex washer head
SPH	slotted pan head
SRH	slotted round head
STD	standard
TAP	self tapping
TTH	Torx truss head
WH	wing head

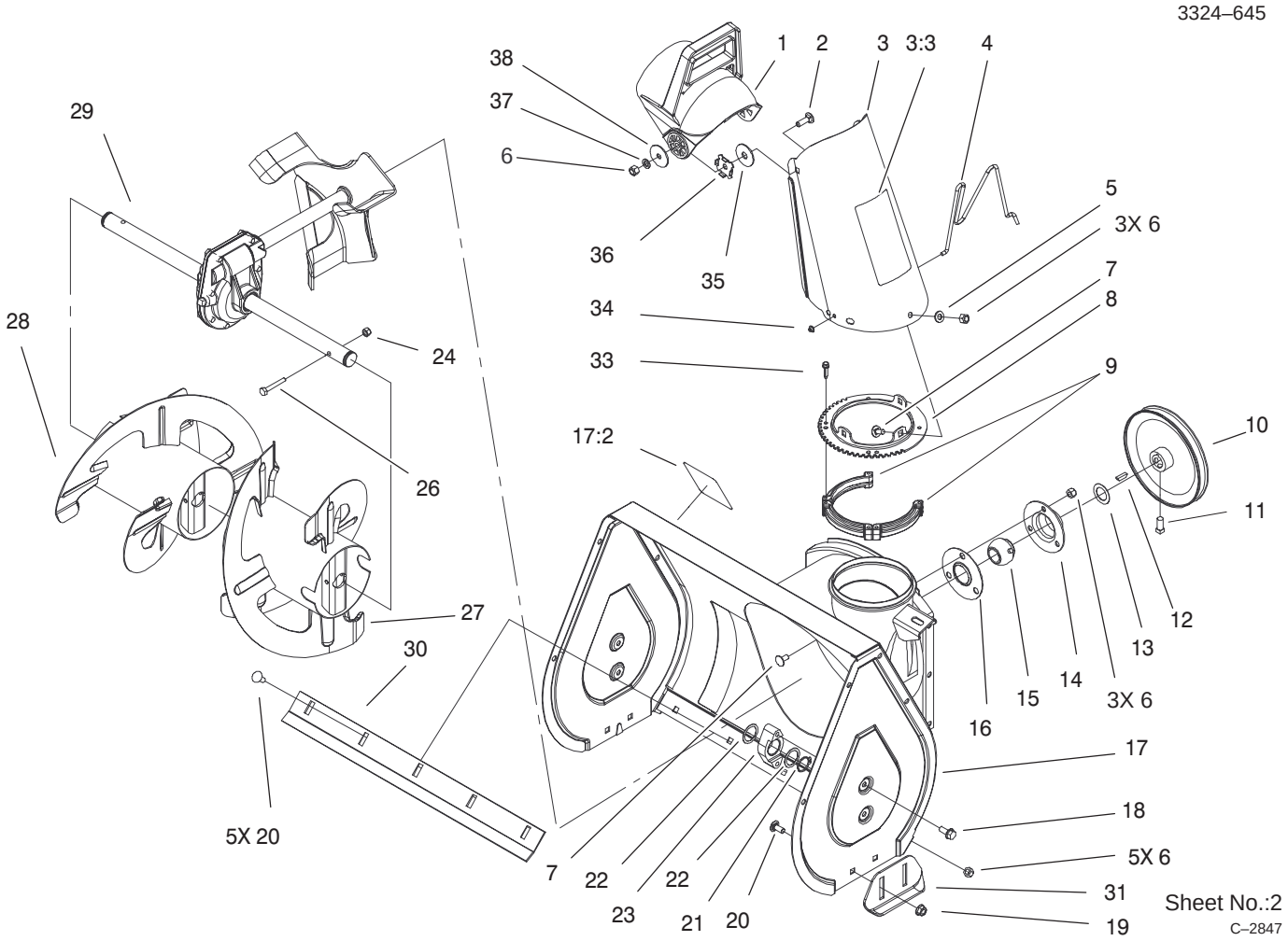

Chute and Auger Assembly

Ref. No.	Part No.	Qty.	Description
1	56–2680	1	Chute–Deflector
2	3230–22	2	Screw–CARR
3	94–2793	1	Chute ASM
3:3	94–8079	1	Decal–Danger
4	56–2670	1	Wire–Chute
5	3256–23	3	Washer–Flat
6	3296–29	13	Nut–Lock
7	3230–18	6	Screw–CARR
8	37–8941–03	1	Ring–Chute
9	37–6490	3	Ring–Chute, Retainer
10	37–6890	1	Pulley
11	3242–4	2	Screw–SQH Set
12	3257–23	1	Key–Woodruff
13	3–0737	1	Washer
14	26–6110	1	Flange–Cup, Bearing
15	63–3450	1	Bearing–Ball
16	26–6120	1	Flange–Cup, Bearing
17	100–5499	1	Auger Housing ASM [Service]
17:2	53–7670	1	Decal–Warning, Auger
18	32144–70	4	Screw–HH
19	32128–20	4	Nut–HF
20	3230–1	9	Screw–CARR
21	32151–36	2	Ring–Retaining
22	5–1550	4	Washer
23	37–6550	2	Bearing–Auger

Ref. No.	Part No.	Qty.	Description
24	3296–42	2	Nut–Lock
26	321–10	2	Screw–HH
27	39–1190–03	1	Auger, LH
28	39–1180–03	1	Auger, RH
29	37–6962	1	22” Gear Case ASM
30	100–5476–01	1	Blade–Scraper
31	40–8160–01	2	Skid
33	27–0220	6	Screw–Special
34	3290–326	1	Nut–Push
35	20–4320	2	Washer–Rubber
36	55–8950	2	Plate–Friction
37	3290–456	2	Washer–Belleville
38	3256–68	2	Washer–Flat

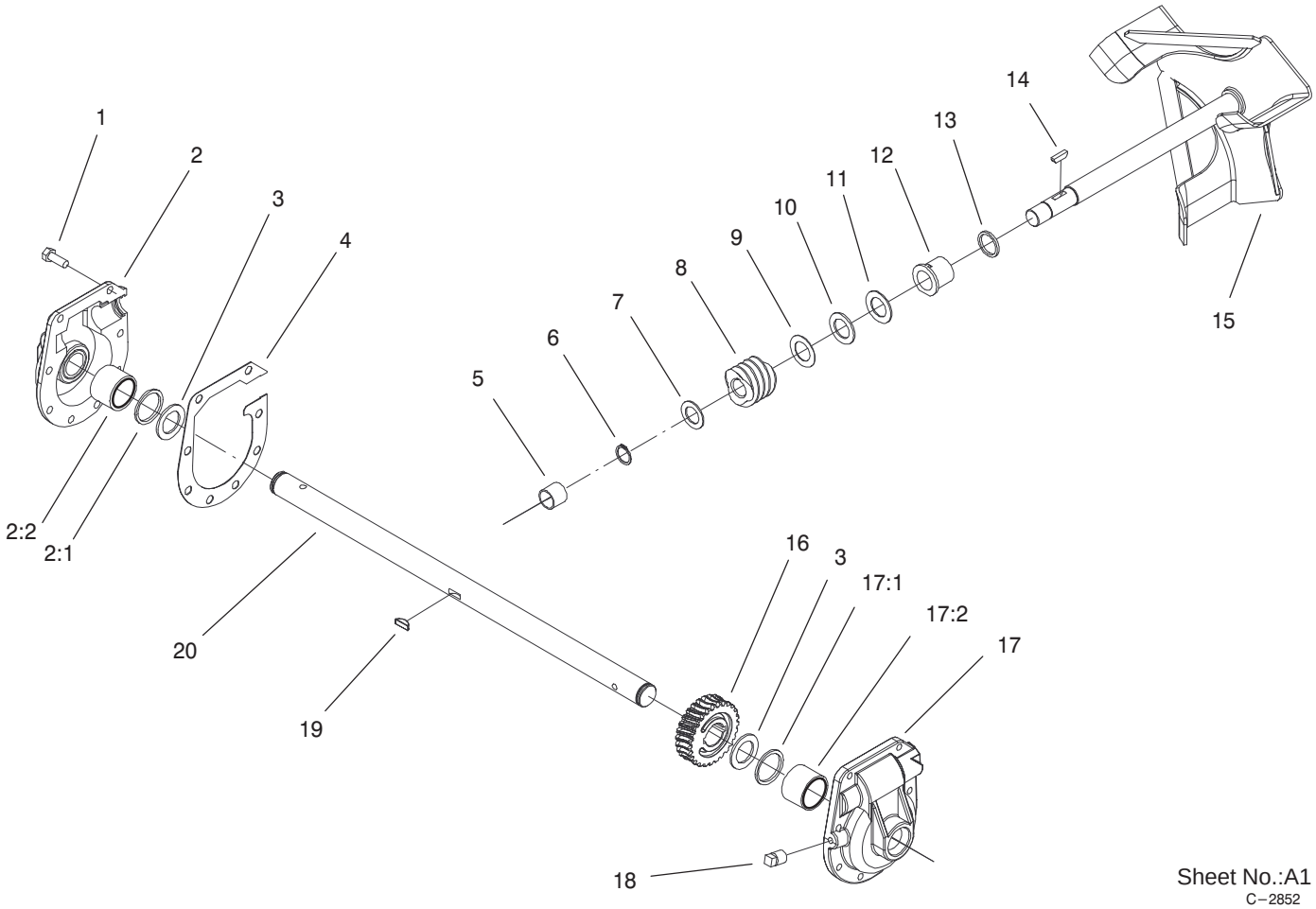

Sheet No.:A1
C–2852

22” Gear Case Assembly No. 37–6962

Ref. No.	Part No.	Qty.	Description
1	32144–41	8	Screw–Taptite
2	14–2449	1	Gear Case, RH
2:1	7–0045	1	Seal–Oil
2:2	256–237	1	Bushing
3	252–71	2	Bearing–Thrust
4	51–0460	1	Gasket–Gear Box
5	256–32	1	Bushing
6	32120–72	1	Ring–Snap
7	3–8664	1	Washer–Thrust
8	5–7170	1	Gear
9	252–80	1	Bearing–Thrust
10	252–76	1	Bearing–Thrust
11	257–3	1	Washer–Thrust
12	37–6560	1	Bushing–Input
13	237–87	1	Ring–Quad
14	3257–23	1	Key–Woodruff
15	37–6990–03	1	Shaft–Impeller
16	5–7180	1	Gear–Worm 21 T
17	14–2459	1	Gear Case, LH
17:1	7–0045	1	Seal–Oil
17:2	256–237	1	Bushing
18	281–1	1	Plug–SQH Pipe
19	3257–33	1	Key–Woodruff
20	37–6802	1	Shaft–Auger

Ref. No.	Part No.	Qty.	Description

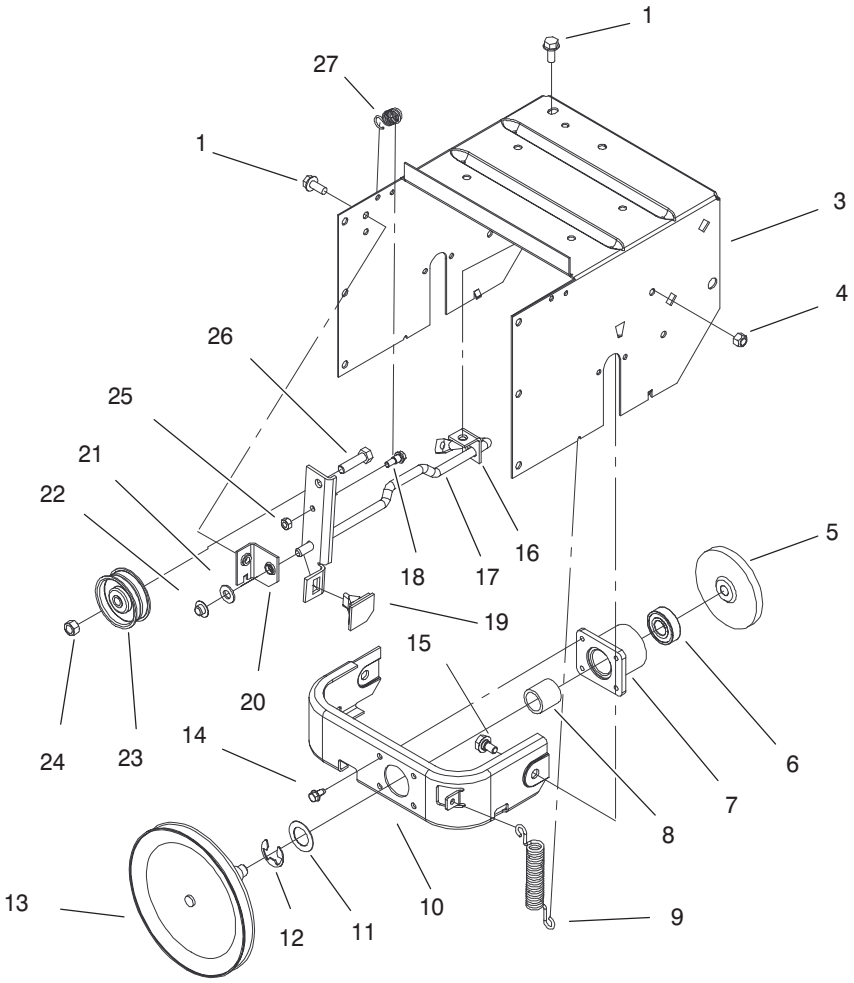

Sheet No.:3

Traction Assembly

Ref. No.	Part No.	Qty.	Description
1	32144–70	2	Screw–HH
3	37–8900–01	1	Frame–Traction
4	3296–29	2	Nut–Lock
5	38–0800	1	Plate–Friction
6	38–7820	1	Bearing–Ball
7	88–0560	1	Hub–Frame, Traction
8	256–322	1	Bushing
9	37–8870	1	Spring–Plate,Friction
10	88–0550–03	1	Frame–Front
11	252–80	1	Bearing–Thrust
12	32151–103	1	Ring–Snap
13	88–0850	1	Pulley & Drive ASM
14	32144–4	4	Screw
15	37–8770	2	Bolt–Shoulder
16	37–9070	1	Bracket–Mount Clutch, Rear
17	40–6511–03	1	Rod–Clutch, Auger
18	42–3560	1	Bolt–Shoulder
19	66–8060	1	Pad–Brake
20	66–6790	1	Bracket–Mount Clutch, Front
21	3256–24	1	Washer–Flat
22	3290–320	1	Retainer–Push On
23	3–4244	1	Pulley–Idler
24	3296–59	1	Nut–Lock NI
25	3296–56	1	Nut–Lock NI

Ref. No.	Part No.	Qty.	Description
26	323–29	1	Screw–HH
27	53–7570	1	Spring

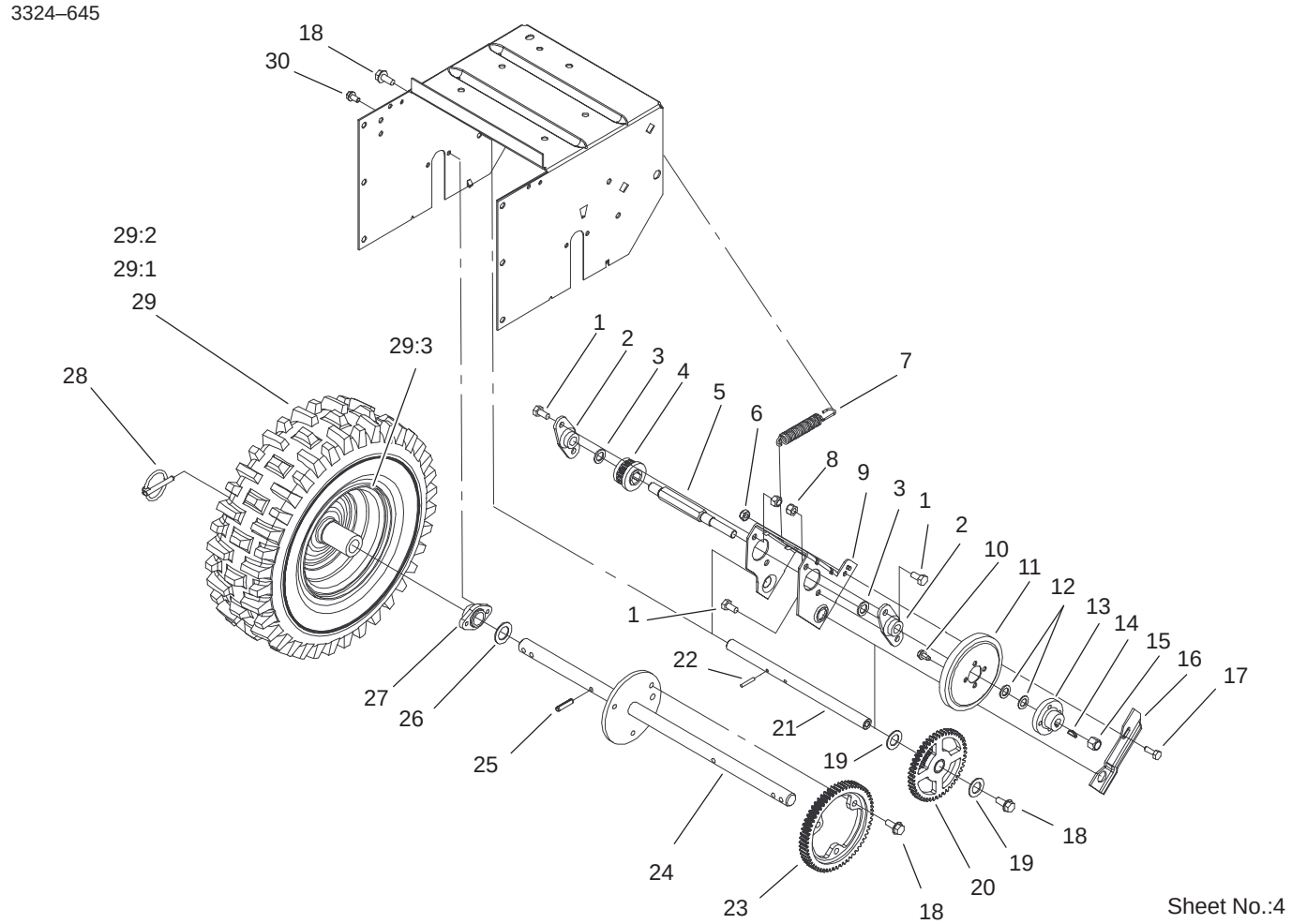

Traction Assembly (Continued)

Ref. No.	Part No.	Qty.	Description
1	322–2	4	Screw–HH
2	20–1620	2	Bearing–Wheel, Friction
3	5–7570	2	Washer–Flat
4	37–6500	1	Pinion
5	37–6780	1	Shaft–Wheel, Friction
6	3296–16	1	Nut–Lock
7	37–8880	1	Spring–Traction
8	3296–29	4	Nut–Lock
9	39–1230	1	Bracket–Sliding
10	32144–4	4	Screw
11	37–6570	1	Wheel–Friction
12	36–4790	2	Washer–Thrust
13	39–1520	1	Hub–Wheel, Friction
14	3257–24	1	Key–Woodruff
15	3296–48	1	Nut–Lock NI
16	39–1250	1	Cam–Receiver
17	321–4	1	Screw–HH
18	32144–70	5	Screw–HH
19	10–9280	2	Washer–Special
20	37–9160	1	Int. Gear/Bushing ASM
21	37–6760	1	Shaft–Pivot
22	32121–45	2	Pin–Spring
23	37–6520	1	Gear–Axle
24	74–1350	1	Shaft–Axle
25	32121–31	2	Pin–Spring

Ref. No.	Part No.	Qty.	Description
26	3–8664	2	Washer–Thrust
27	37–6850	2	Bearing–Axle
28	3290–243	2	Pin–Lynch
29	67–9221	2	Wheel And Tire ASM
29:1	231–120	1	Tire
29:2	232–46	1	Tube
29:3	241–131	1	Rim–Wheel
30	32144–4	4	Screw–HH

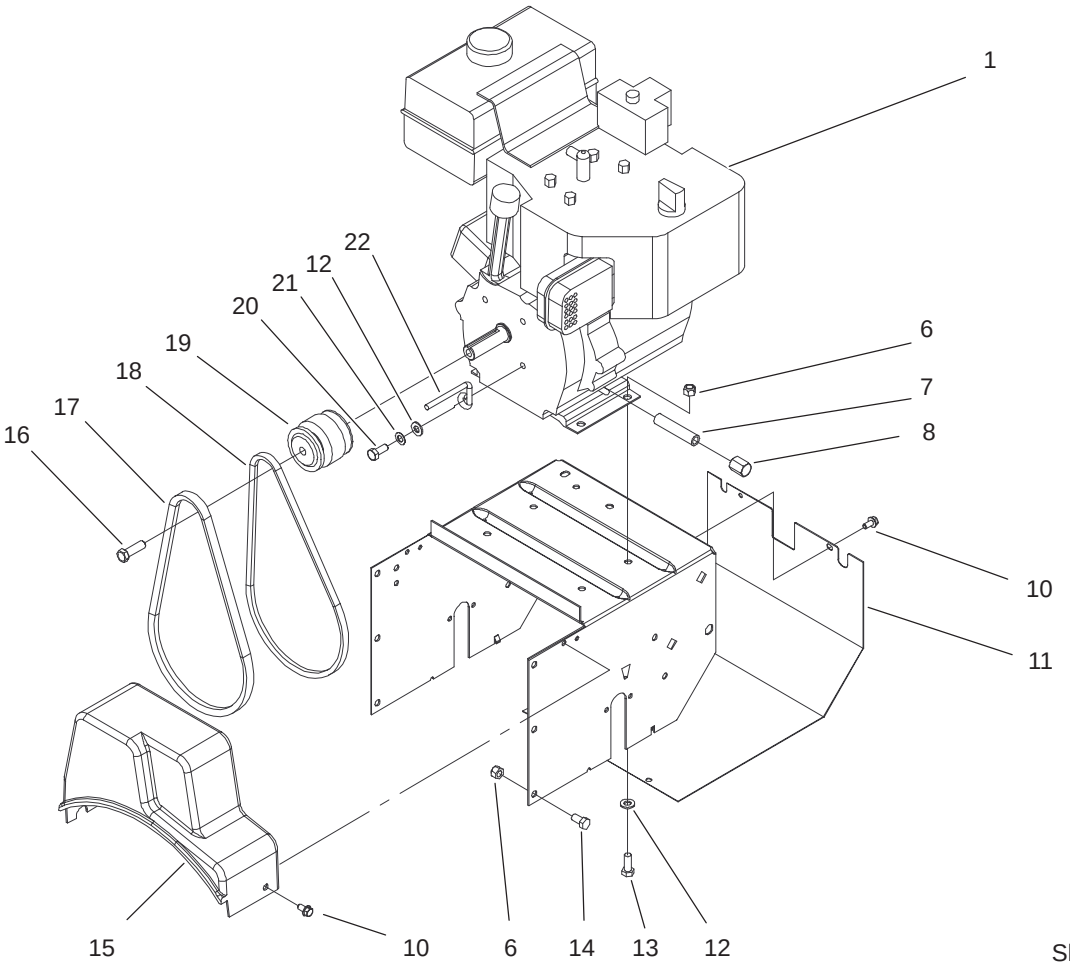

Sheet No.: 5

Engine Assembly

Ref. No.	Part No.	Qty.	Description
‡1		1	Engine–5hp, Tecumseh Hssk50–67401s
6	3296–29	10	Nut–Lock
7	49–3040	1	Pipe–Nipple
8	281–7	1	Cap–Pipe
10	32144–4	6	Screw–HH
11	37–6830–01	1	Cover–Traction, Lower
12	3256–23	5	Washer–Flat
13	322–7	4	Screw–HH
14	322–2	6	Screw–HH
15	37–6900	1	Cover – Belt
16	43–7290	1	Screw–Special
17	37–9080	1	V–Belt
18	37–9090	1	V–Belt
19	43–7370	1	Pulley–Engine
20	3210–3	1	Screw–HH
21	3255–8	1	Washer–Lock/Ext
22	37–8990	1	Retainer–Belt

Ref. No.	Part No.	Qty.	Description

‡ Obtain locally.

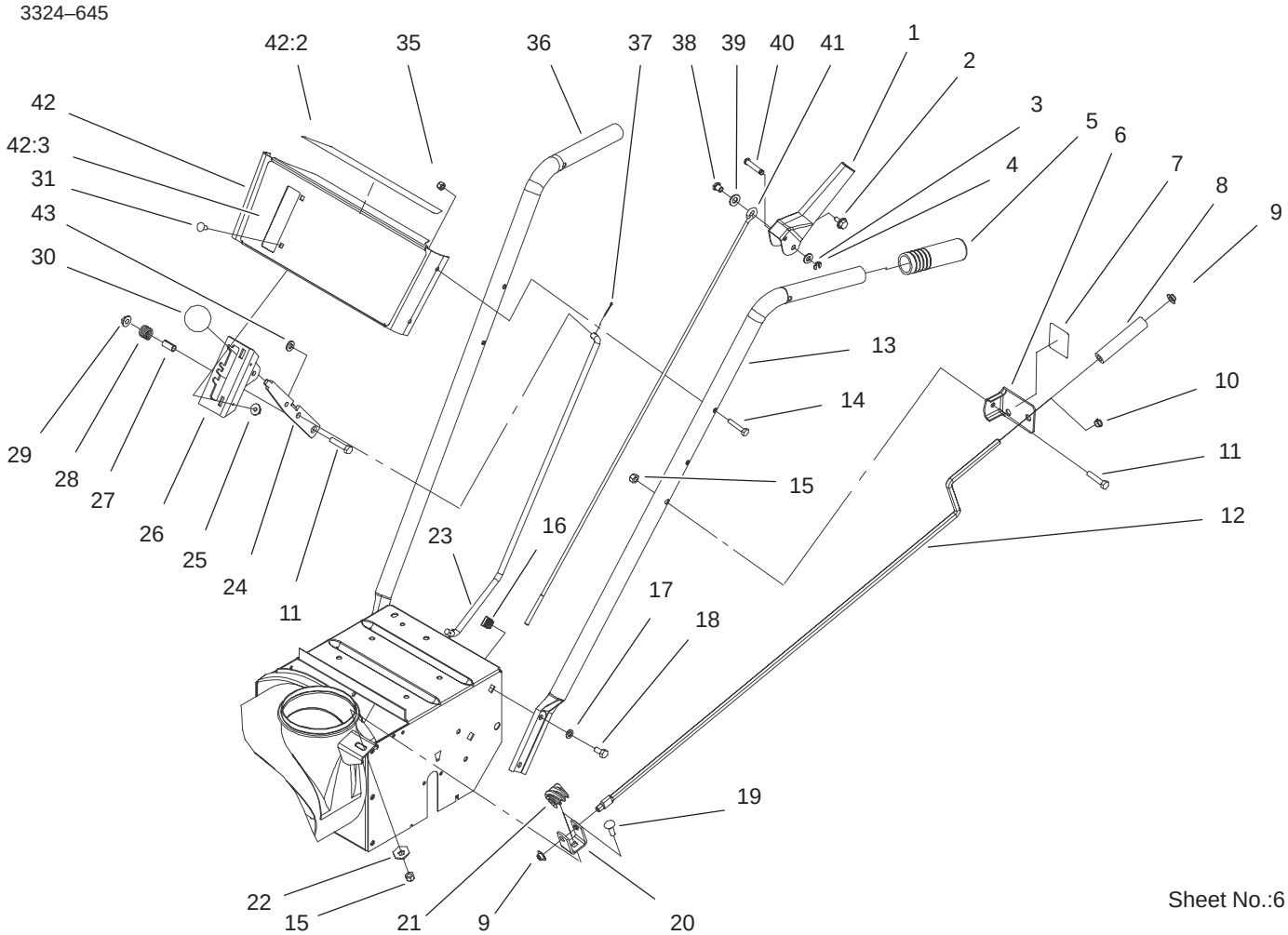

Handle Assembly

Ref. No.	Part No.	Qty.	Description
1	63–3640	2	Handle–Control
2	3234–13	2	Screw–HHF
3	3256–23	2	Washer–Flat
4	32151–73	2	Ring–Clip
5	74–1360	2	Grip–Handle
6	25–6090	1	Bracket–Rod, Chute
7	63–3510	1	Decal – Chute Direction
8	40–8230	1	Grip–Chute Control
9	3290–320	2	Retainer–Push On
10	256–249	1	Bushing
11	322–7	2	Screw–HH
12	40–8270	1	Rod–Control, Chute
13	52–5571–03	1	Handle–Left
14	321–9	4	Screw–HH
15	3296–29	2	Nut–Lock
16	3290–196	4	Nut
17	3290–456	4	Washer–Belleville
18	322–2	4	Screw–HH
19	3230–22	1	Screw–CARR
20	40–8280	1	Bracket–Worm
21	40–8250	1	Gear–Worm, Chute
22	3290–238	1	Washer–Lock
23	39–7570	1	Rod–Selector, Speed
24	37–8820–03	1	Selector–Speed
25	32128–33	2	Nut–HF

Ref. No.	Part No.	Qty.	Description
26	39–1280–03	1	Mount–Selector, Speed
27	40–8130	1	Spacer
28	37–9150	1	Spring
29	32128–13	1	Nut–Hex Flange
30	233–21	1	Knob
31	3229–11	2	Screw–CARR
35	3296–42	4	Nut–Lock
36	52–5561–03	1	Handle–Right
37	3272–4	1	Pin–Cotter
38	47–4990	2	Post–Linkage Mounting
39	3256–24	2	Washer–Flat
40	52–5600	2	Pin–Lever, Control
41	52–5590	2	Link–Upper
42	100–3565	1	Escutcheon Panel ASM
42:2	99–3214	1	Decal–Escutheon Back
42:3	100–3332	1	Decal – Escutcheon
43	3256–23	1	Washer–Flat

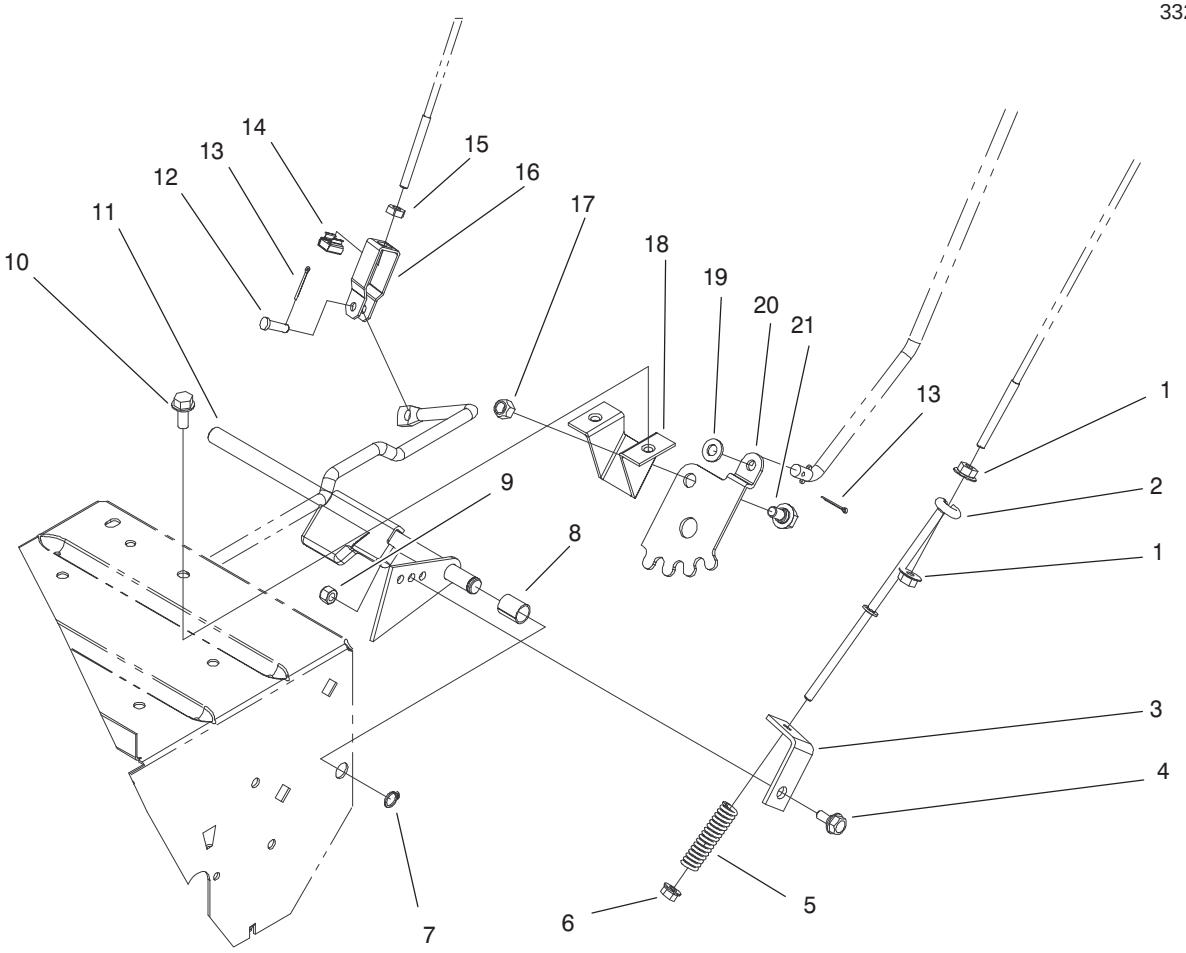

Sheet No.:7

Linkage and Traction Assembly

Ref. No.	Part No.	Qty.	Description
1	32128–33	1	Nut–HF
2	39–3060	1	Rod–Traction, Lower
3	38–4490	1	Bracket–Traction
4	40–8350	1	Screw
5	38–4520	1	Spring
6	32128–32	2	Nut–Hex, Flange
7	32151–61	1	Ring–Retaining
8	40–9680	1	Spacer
9	3296–42	1	Nut–Lock
10	32144–70	2	Screw–HH
11	43–7310–03	1	Traction Arm Assembly
12	283–3	1	Pin–Clevis
13	3272–4	2	Pin–Cotter
14	32115–5	1	Nut–Retained
15	3218–1	1	Nut–Jam
16	39–3080	1	Clevis
17	3296–29	1	Nut–Lock
18	37–8790	1	Mount–Lever
19	3256–23	1	Washer–Flat
20	37–8800	1	Gear–Quadrant
21	37–8770	1	Bolt–shoulder

Ref. No.	Part No.	Qty.	Description

Engine Tecumseh Model HSSK50–67401S

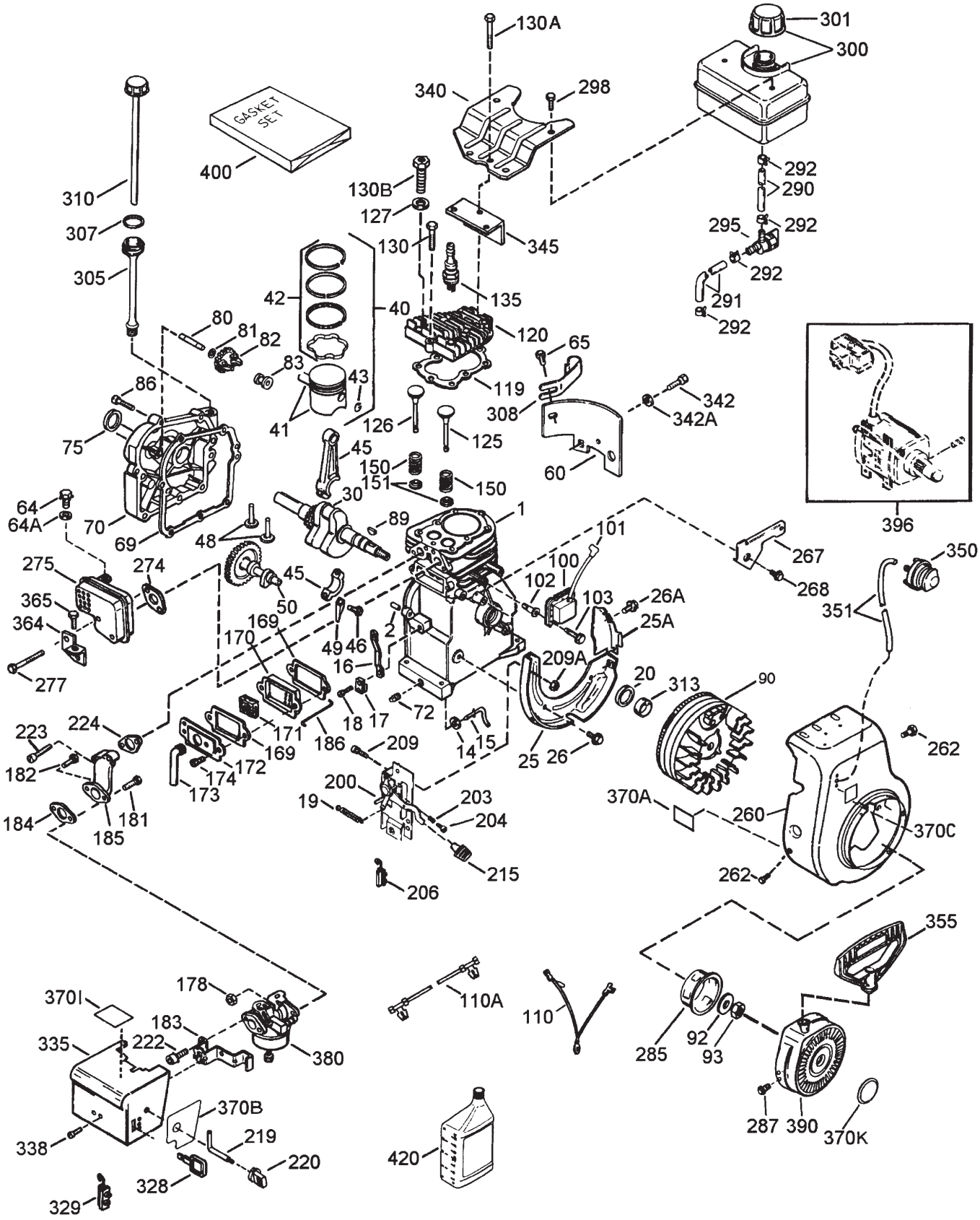

Engine Tecumseh Model HSSK50–67401S

Ref. No.	Part No.	Qty.	Description
1	36469A	1	Cylinder Assembly (Incl. Ref. #2, 20, 72 & 125)
2	26727	2	Pin – Dowel
14	28277	1	Washer – Flat
15	31334	1	Rod – Governor
16	31510	1	Lever – Governor
17	31335	1	Clamp – Governor Lever
18	651018	1	Screw – Torx
19	31426	1	Spring – Extension
20	32600	1	Seal – Oil
25	36552	1	Baffle – Blower Housing
25A	35883	1	Extension – Baffle
26	650802	2	Screw – Hex Washer Hd.
26A	650926	1	Screw
30	34740	1	Crankshaft Assembly
40	36073	1	Piston – Pin & Ring Asm.. Standard
	36074	1	Piston – Pin & Ring Asm. .010” oversize
	36075	1	Piston – Pin & Ring Asm. .020” oversize
41	36070	1	Piston & Pin Asm.. Standard (Incl. Ref. #43)
	36071	1	Piston & Pin Assembly .010” oversize (Incl. Ref. #43)
	36072	1	Piston & Pin Assembly .020” oversize (Incl. Ref. #43)
42	36076	1	Ring Set – Piston Std.
	36077	1	Ring Set – Piston .010” oversize
	36078	1	Ring Set – Piston .020” oversize
43	20381	2	Ring – Piston Pin Retaining
45	32875A	1	Connecting Rod Assembly (Incl. Ref. #46 & 49)
46	32610A	2	Bolt – Connecting Rod
48	27241	2	Lifter – Valve
49	32654	1	Dipper – Oil
50	33158	1	Camshaft
60	29745	1	Extension – Blower
64	30063	1	Screw – Hex Washer Hd.
64A	8345	1	Washer – Flat
65	650128	1	Screw – Hex Hd.
69	*27677A	1	Gasket – Cylinder Cover
70	34674C	1	Cover – Cylinder (Incl. Ref. #75 & 80)
72	27642	2	Plug – Pipe
75	27897	1	Seal – Oil
80	30574A	1	Shaft – Governor
81	30590A	1	Washer – Flat
82	30591	1	Gear – Governor (Incl. Ref. #81)
83	30588A	1	Spool – Governor

Ref. No.	Part No.	Qty.	Description
86	650488	7	Screw – Hex Hd.
89	610961	1	Key– Flywheel
90	611199	1	Flywheel – w/Ring Gear
92	650815	1	Washer – Belleville
93	650816	1	Nut – Flywheel
100	34443B	1	Solid State Assembly
101	610118	1	Cover – Spark Plug
102	651024	2	Stud
103	651007	2	Screw – Torx
110	35182	1	Wire – Ground
110A	36874	1	Ground Wire
119	*36443	1	Gasket – Cylinder Head
120	36441	1	Head – Cylinder (Incl. Ref. #131)
125	36471	1	Valve – Exhaust Standard (Incl. Ref. #151)
	36472	1	Valve – Exhaust 1/32” oversize (Incl. Ref. #151)
126	32644A	1	Valve – Intake Standard (Incl. Ref. #151)
	32645A	1	Valve – Intake 1/32” oversize (Incl. Ref. #151)
127	650691	1	Washer – Flat
130	6021A	2	Screw – Hex Flange Hd.
130A	650694A	5	Screw – Hex Flange Hd.
130B	650818	1	Screw – Special
135	35395	1	Plug – Spark (Champion RJ–19LM or equivalent)
150	31672	2	Spring – Valve
151	31673	2	Cap – Valve Spring
169	*27234A	2	Gasket – Valve Cover
170	27666	1	Body – Valve Cover
171	31410	1	Element – Valve Body
172	34146	1	Cover – Breather
173	35350	1	Tube – Breather
174	650783	2	Screw – Hex Hd.
178	29752	2	Nut & Lockwasher
181	650870	1	Screw – Hex Hd.
182	6201	1	Screw – Hex Hd.
183	34583A	1	Bracket – Choke
184	*26756	1	Gasket – Carburetor
185	33691	1	Pipe – Intake
186	32698	1	Link – Governor to Throttle
200	36677	1	Control Assembly (Incl. Ref.# 203, 204, 206, 209 & 209A)
203	31342	1	Spring – Compression
204	651029	1	Screw – Fil. Hd.
206	610973	1	Terminal Assembly
209	650139	2	Screw
209A	30322	2	Lock Nut
215	35440	1	Knob – Speed Control
219	34582	1	Rod – Choke
220	35438	1	Knob – Choke Control
222	28820	2	Screw – Fil. Hd.
223	650664	2	Screw – Fil Hd.
224	*33673A	1	Gasket – Intake

Note: Order individual parts from your local Tecumseh dealer.
* Indicated Parts included in Gasket Set Ref.#400

Engine Tecumseh Model HSSK50–67401S

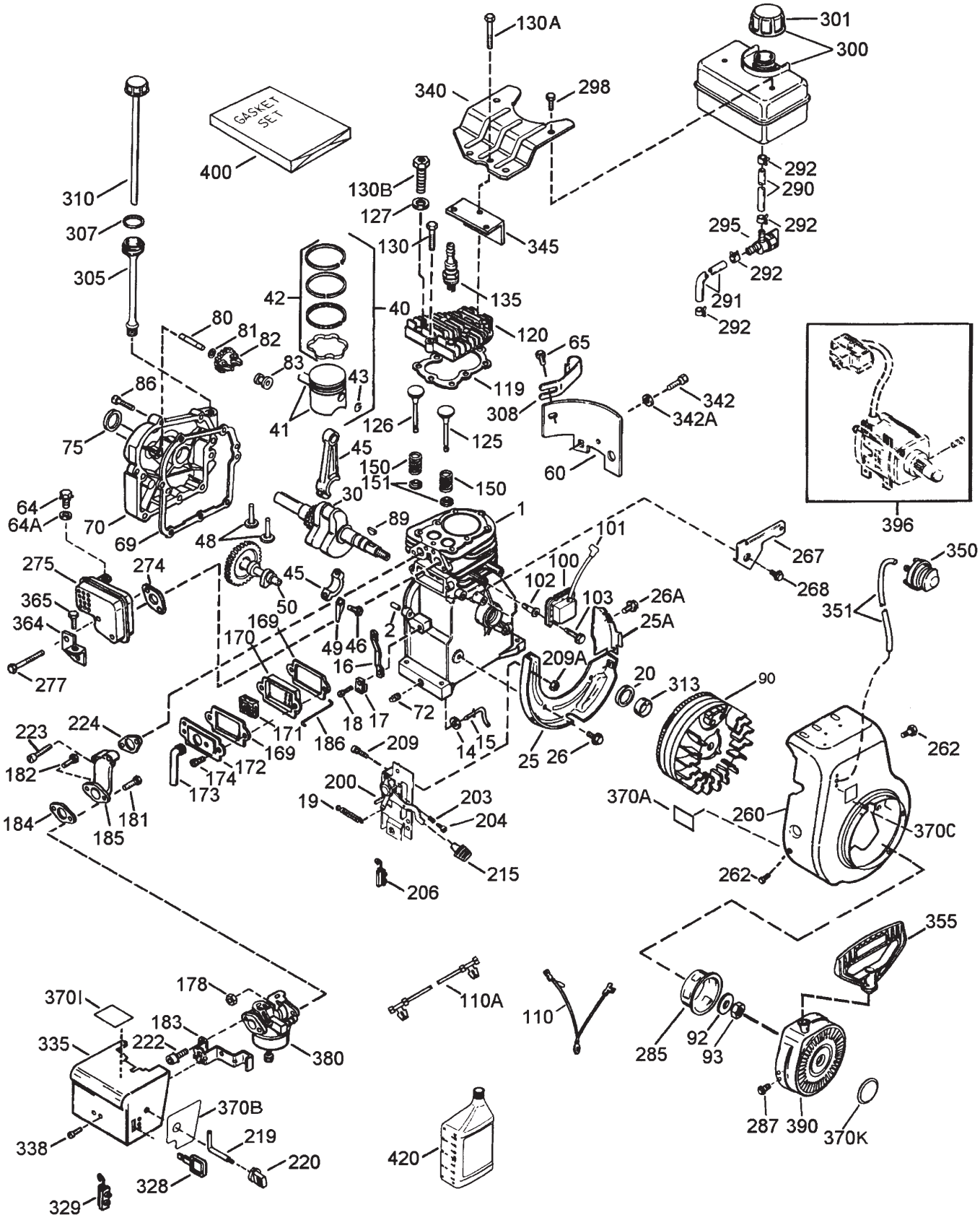

Engine Tecumseh Model HSSK50–67401S (Continued)

Ref. No.	Part No.	Qty.	Description
260	35656A	1	Housing – Blower
262	650737	2	Screw – Hex Hd.
267	34212	1	Bracket – Hold Down
268	30200	1	Screw – Hex WashersHd.
274	*33670A	1	Gasket – Exhaust
275	35771	1	Muffler (Incl. Ref.# 274)
277	650327	2	Screw – Fil. Hd.
285	36467A	1	Cup – Starter
287	650926	2	Screw – Hex Washer Hd.
290	30705	1	Line – Fuel
291	29774	1	Line – Fuel
292	26460	4	Clamp – Fuel Line
295	35857	1	Valve – Shut–Off
298	650665	2	Screw – Hex Washer Hd.
300	35584	1	Tank Assembly – Fuel (Incl. Ref. #292 & 301)
301	36246	1	Cap – Fuel Tank
305	35554	1	Tube Asm.. – Oil Fill
307	35499	1	”O” Ring
308	35539	1	Clip – Oil Fill
310	35556	1	Dipstick
313	34080	1	Spacer – Flywheel Key
328	35062	2	Ignition Key
329	610973	1	Terminal
335	35072	1	Cover – Carburetor
338	650257	2	Screw – Pan Hd.
340	36247	1	Plate – Fuel Tank
342	30063	1	Screw w/Belleville Washer
342A	650675	1	Washer – Flat
345	33344	1	Baffle – Heat
350	570682A	1	Primer Assembly
351	32180C	1	Line – Primer
355	590574	1	Handle – Starter
364	33333	1	Carburetor Cover Bracket
365	650735	1	Screw
370A	36261	1	Decal – Lubrication
370B	35282	1	Control Decal
370C	36501	1	Primer Decal
370I	37119	1	Warning Decal
370K	36695	1	Starter Decal
380	640084A	1	Carburetor (Incl. Ref. #184)
390	590742	1	Starter – Rewind
396	33290E	1	Electric Starter Kit (110 V) (Optional)
400	36444	1	Gasket Set (Incl. Parts Marked *) (26756 (1), 27234A (2), 27272A (1), 27677A (1) 29673 (1), 36443 (1), 33670A (1), 33673A (1)
420	730226	1	Oil – 4 Cycle SAE 5W30 (Quart)

Ref. No.	Part No.	Qty.	Description

Note: Order individual parts from your local Tecumseh dealer.
* Indicated Parts included in Gasket Set Ref.#400

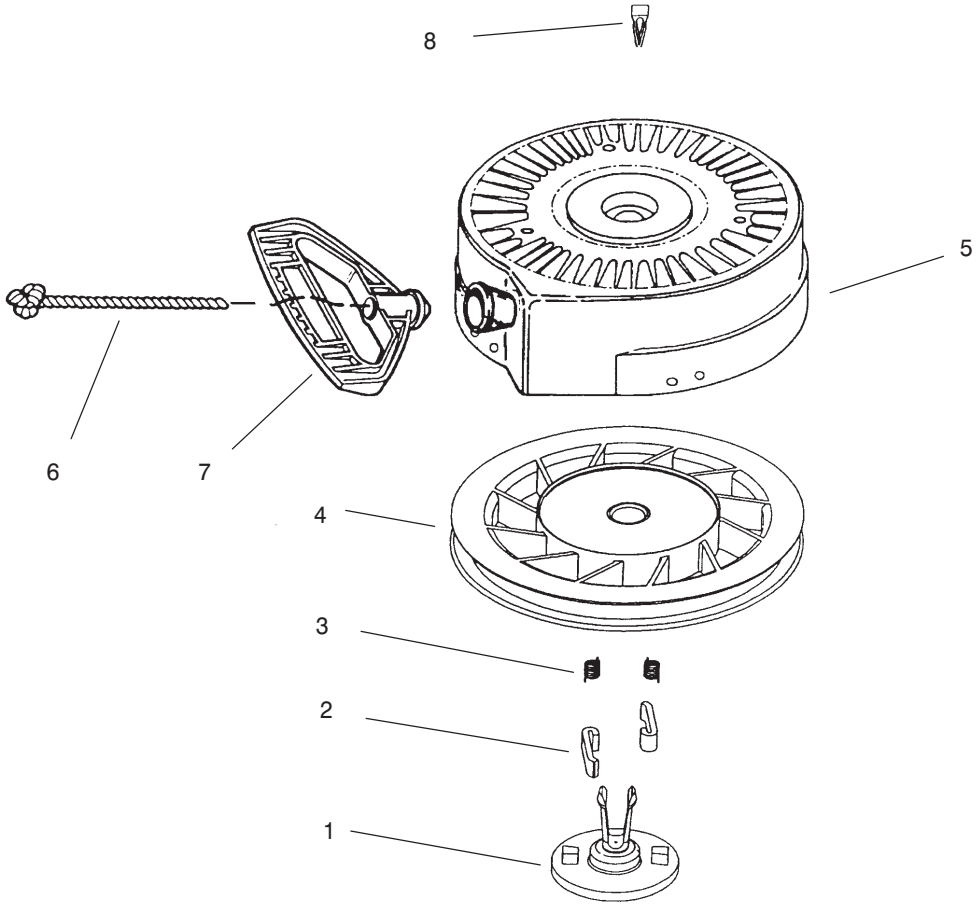

Rewind Starter No. 590742

Ref. No.	Part No.	Qty.	Description
1	590740	1	Retainer
2	590616	2	Starter Dog
3	590617	2	Dog Spring
4	590645A	1	Pulley & Rewind Spring Asm.
5	590647	1	Starter Housing Asm.
6	590535	1	Starter Rope
7	590574	1	Mitten Grip Handle
8	590741	1	Locking Tab

Ref. No.	Part No.	Qty.	Description

Note: Order individual parts from your local Tecumseh dealer.

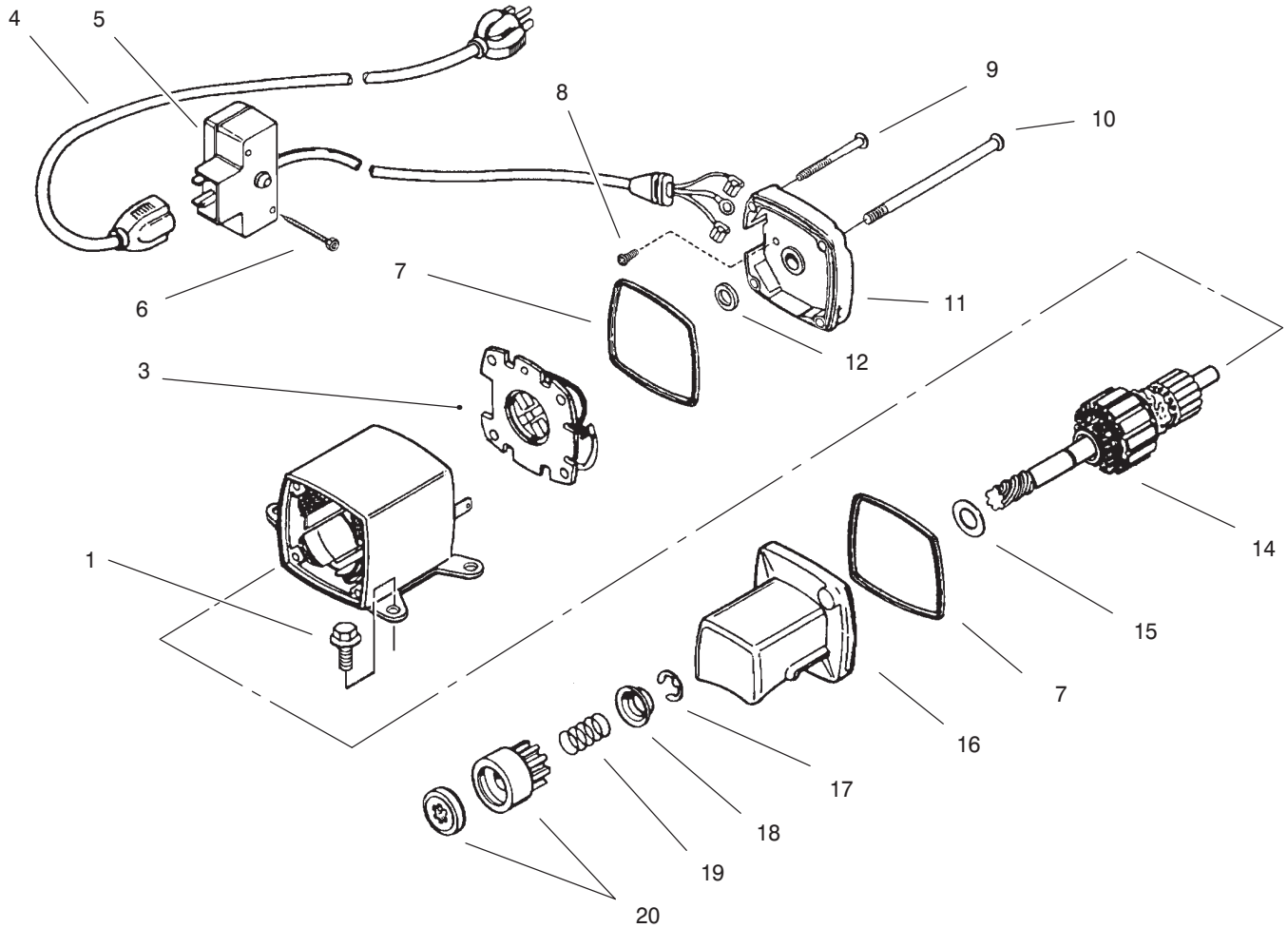

Starter Motor No. 33290E (Optional)

Ref. No.	Part No.	Qty.	Description
1	650759	3	Screw – Torx
3	35452A	1	Brush & Spring Card Asm
4	32450B	1	Cord – Extension
5	35454	1	Switch Box Asm (Incl. Ref. # 6)
6	650819	2	Screw
7	35450	2	”O’Ring
8	33441	1	Screw – Ground
9	35456	1	Scerw – Ground
10	35462	2	Bolt – Case
11	35453	1	Cap – Commutator End Asm (Incl. Ref. #7)
12	590500	1	Washer – Thrust
14	35912	1	Armature
15	35911	1	Washer – Thrust
16	35461	1	Cap – Drive End (Incl. Ref.# 7)
17	31749	1	Ring – Retainer
18	33522	1	Retainer – Spring
19	33769	1	Spring – Anti Drift
20	33524	1	Nut & Gear
*	33290E	1	Starter – Electric (110 Volt)

Ref. No.	Part No.	Qty.	Description
*	730623	1	Switch Repair Kit

Note: Order individual parts from your local Tecumseh dealer.
* Not Illustrated

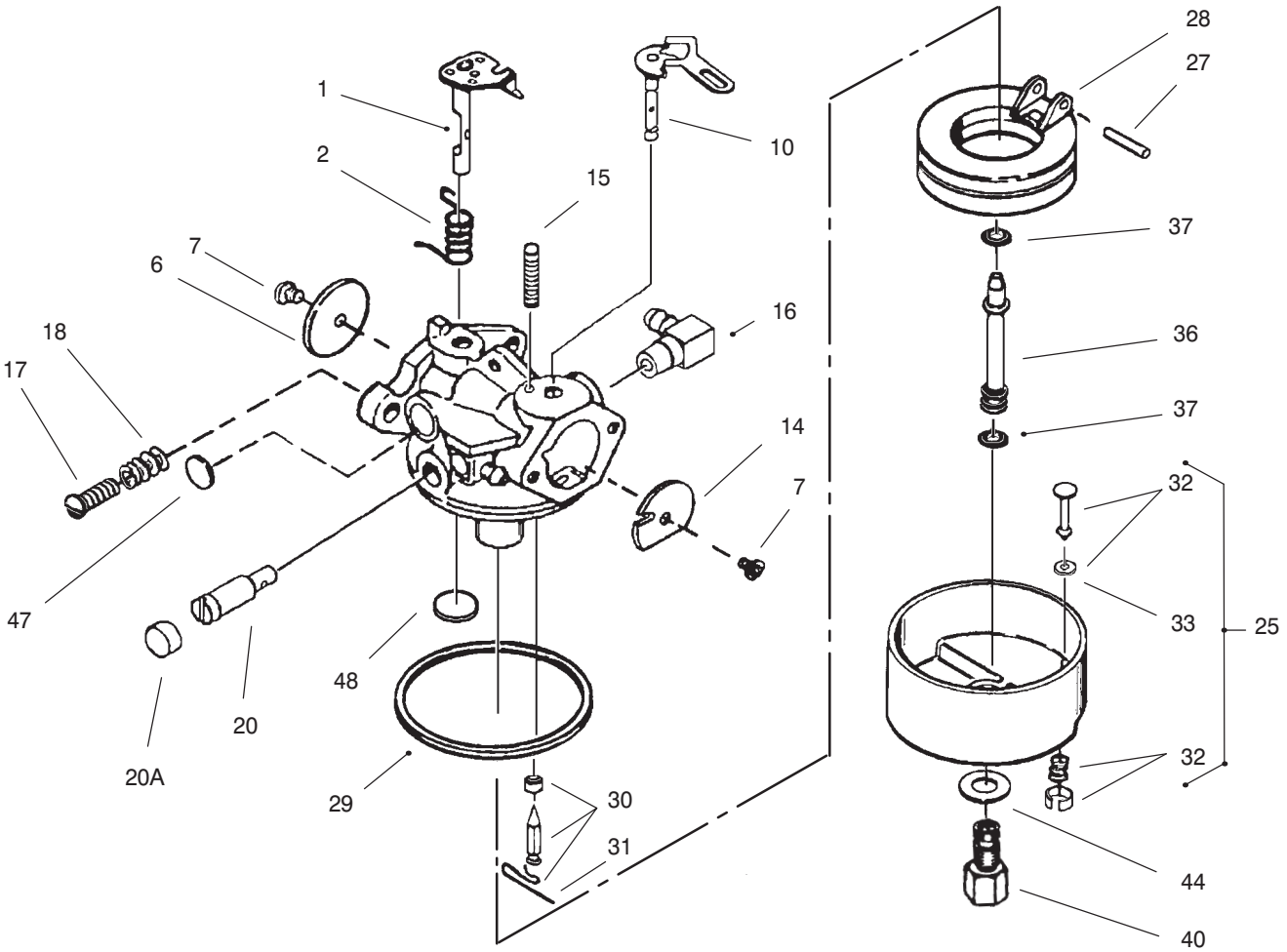

Carburetor No. 640084A

Ref. No.	Part No.	Qty.	Description
1	631615	1	Shaft & Lever Assembly
2	631767	1	Throttle Shaft & Lever Asm.
6	640070	1	Throttle Shutter
7	650506	2	Screw – Shutter
10	632108	1	Choke Shaft & Throttle Asm.
14	631890	1	Shutter – Choke
15	630735	1	Spring – Choke Positioning
16	631807	1	Fuel Fitting
17	651025	1	Screw – Idle
18	630766	1	Spring – Tension
20	640018	1	Screw – Idle Restrictor
20A	640053	1	Cap – Idle Restrictor Screw
25	631951	1	Float Bowl Asm. (Incl. Ref. # 32, 33)
27	631024	1	Shaft – Float
28	632019	1	Float
29	631028	1	ORing – Float Bowl
30	631021	1	Inlet Needle – Seat & Clip (Incl. Ref. # 31)
31	631022	1	Clip – Spring
32	27136A	1	Bowl Drain Asm.

Ref. No.	Part No.	Qty.	Description
33	27554	1	Gasket – Drain Plunger
36	632745	1	Main Nozzle Tube
37	632547	2	ORing – Main Nozzle Tube
40	640131	1	Nut – High Speed Bowl
44	27110	1	Bowl Nut Washer
47	630748	1	Welch Plug – Idle Mixture Well
48	631027	1	Welch Plug – Atmospheric Vent
*	640084A	1	Carburetor (Incl. Ref. #1–48)

Note: Order individual parts from your local Tecumseh dealer.
* Not Illustrated

Maintenance Record

Date								

Maintenance Record

Date								

Maintenance Record

Date								

TORO®