FORM NO. 3311-540

TORO®

PART NO. 36-7250

INSTALLATION INSTRUCTIONS

GREENSMASTER 3® GRASS BASKET

(Replacement for grass baskets on Model 04400 & 04401 cutting units)

Since this instruction sheet covers only a minimal amount of information necessary to maintain and operate your machine, we suggest that you keep this material with your Operator's Manual so that both may be referred to for instructions concerning safe operation and proper maintenance procedures.

FITTING GRASS BASKET TO CUTTING UNIT

Because the replacement basket lip extends out further than the old basket, it will be necessary to trim the basket so it will be properly positioned in relation to the front crossbar.

CAUTION

Use care while trimming basket to prevent personal injury.

Note: DO NOT trim front edge of basket if basket is to be used with Model No. 04407 cutting units.

1. Trim the basket off at the first bead with a sharp knife or similar cutting instrument (Fig. 1).

2. Install the basket onto the cutting unit and check the fit. Trim further, if necessary.

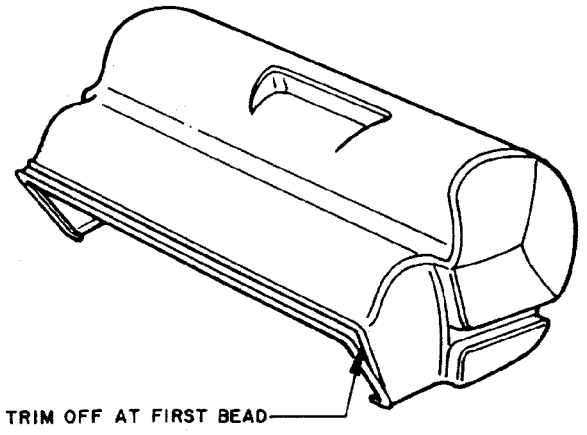

Figure 1

AID TO MAINTAINING ALIGNMENT AND OVERLAP WHILE MOWING

To assist in maintaining alignment and desired overlap, it is suggested the following be done to the No. 2 and 3 cutting unit baskets:

A. Measure in approximately three inches (76 mm) from the outer edge of each basket (Fig. 2).

B. Either place a strip of white tape or paint a line parallel with the outer edge of the gaskets onto each basket.

C. Use the line to achieve an even overlap all along each cutting swath.

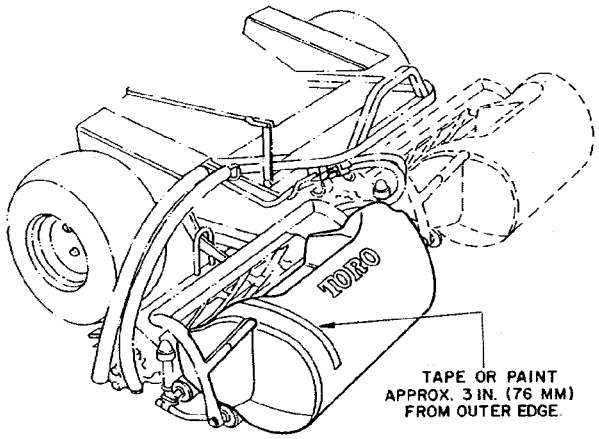

Figure 2

COPYRIGHT © ALL RIGHTS RESERVED
The Toro Company – 1979
MINNEAPOLIS, MN 55420 – U.S.A.