FORM NO. 3318-502 Rev. B

TORO®

Wheel Horse®
520H

Garden Tractor

Model No. 73502 - 6900001 & Up

Operator's Manual

IMPORTANT: Read this manual carefully. It contains information about your safety and the safety of others. Also become familiar with the controls and their proper use before you operate the product.

Introduction

Thank you for purchasing a Toro product.

All of us at Toro want you to be completely satisfied with your new product, so feel free to contact your local Authorized Service Dealer for help with service, genuine replacement parts, or other information you may require.

Whenever you contact your Authorized Service Dealer or the factory, always know the model and serial numbers of your product. These numbers will help the Service Dealer or Service Representative provide exact information about your specific product. You will find the model and serial number plate located in a unique place on the product as shown below.

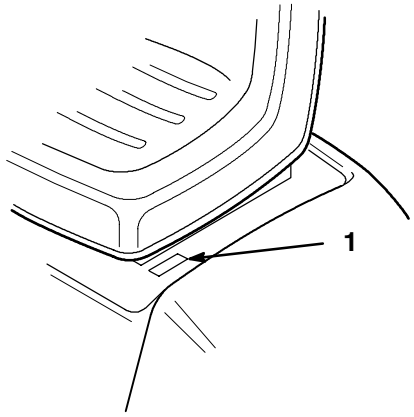

1. Model and Serial Number Plate

For your convenience, write the product model and serial numbers in the space below.

Model No: _____

Serial No. _____

Read this manual carefully to learn how to operate and maintain your product correctly. Reading this manual will help you and others avoid personal injury and damage to the product. Although we design, produce and market safe, state-of-the-art products, you are responsible for using the product properly and safely. You are also responsible for training persons, who you allow to use the product, about safe operation.

The warning system in this manual identifies potential hazards and has special safety messages that help you and others avoid personal injury, even death. DANGER, WARNING and CAUTION are signal words used to identify the level of hazard. However, regardless of the hazard, be extremely careful.

DANGER signals an extreme hazard that will cause serious injury or death if the recommended precautions are not followed.

WARNING signals a hazard that may cause serious injury or death if the recommended precautions are not followed.

CAUTION signals a hazard that may cause minor or moderate injury if the recommended precautions are not followed.

Two other words are also used to highlight information. “Important” calls attention to special mechanical information and “Note” emphasizes general information worthy of special attention.

The left and right side of the machine is determined by sitting on the seat in the normal operator’s position.

⚠ WARNING: ⚠

The engine exhaust from this product contains chemicals known to the State of California to cause cancer, birth defects, or other reproductive harm.

©The Toro Company - 1995
All Rights Reserved

Contents

	Page
Safety	2
Safe Operating Practices	2
Slope Chart	5
Safety and Instruction Decals	7
Gasoline and Oil	8
Recommended Gasoline	8
Stabilizer/Conditioner	8
Filling the Fuel Tank	8
Check Engine Oil Level	8
Operation	9
Think Safety First	9
Controls	9
Parking Brake	9
Starting and Stopping the Engine	10
Operating the Power Take Off (PTO)	11
The Safety Interlock System	11
Indicator Control Module	12
Instruments	13
Driving Forward or Backward	14
Stopping the Machine	14
Attachment Power Lift	15
Positioning the Seat	15
Lights	15
Installing PTO Belt	16
Pushing the Machine by Hand	16

	Page
Maintenance	17
Service Interval Chart	17
Air Cleaner	19
Engine Oil	21
Spark Plug	23
Engine Breather	24
Greasing and Lubrication	25
Tire Pressure	26
Brake	26
PTO (Power Take Off) Brake	27
Front Wheel Toe-In	28
Fuel Tank	29
Fuel Filter	30
Transaxle Fluid	30
Headlights	32
Taillights	33
Battery	34
Fuse	36
Wiring Diagram	37
Cleaning and Storage	38
Troubleshooting	39
Warranty	Back Cover

Safety

This machine meets or exceeds the B71.1-1990 specifications of the American National Standards Institute, in effect at the time of production. However, improper use or maintenance by the operator or owner can result in injury. To reduce the potential for injury, comply with these safety instructions and always pay attention to the safety alert ⚠ symbol, which means CAUTION, WARNING, or DANGER—"personal safety instruction." Failure to comply with the instruction may result in personal injury or death.

Safe Operating Practices

This product is capable of amputating hands and feet and throwing objects. Always follow all safety instructions to avoid serious injury or death.

⚠ WARNING

POTENTIAL HAZARD

- **Engine exhaust contains carbon monoxide, which is an odorless, deadly poison.**

WHAT CAN HAPPEN

- **Carbon monoxide can kill you and is also known to the State of California to cause birth defects.**

HOW TO AVOID THE HAZARD

- **Do not run engine indoors or in an enclosed area.**

General Operation

1. Read, understand, and follow all instructions in the operator's manual and on the machine before starting.
2. Allow only responsible adults who are familiar with the instructions to operate the machine.
3. Clear the area of objects such as rocks, toys, wire, etc., which could be picked up and thrown by the blade.
4. Be sure the area is clear of other people before mowing. Stop the machine if anyone enters the area.
5. Never carry passengers.
6. Do not mow in reverse unless absolutely necessary. Always look down and behind before and while backing.
7. Be aware of the mower discharge direction and do not point it at anyone. Do not operate the mower without either the entire grass catcher or the guard in place.
8. Slow down before turning. Sharp turns on any terrain may cause loss of control.
9. Never leave a running machine unattended. Always turn off blades, set parking brake, stop engine, and remove key before dismounting.
10. Turn off blades when not mowing.
11. Keep hands, feet, hair and loose clothing away from attachment discharge area, underside of mower and any moving parts while engine is running.
12. Stop the engine before removing the grass catcher or unclogging the chute.

13. Mow only in daylight or good artificial light.

14. Do not operate the machine while under the influence of alcohol or drugs.

15. Watch for traffic when operating near or crossing roadways.

16. Use extra care when loading or unloading the machine onto a trailer or truck.

17. Do not touch equipment or attachment parts which may be hot from operation. Allow to cool before attempting to maintain, adjust or service.

Slope Operation

Slopes are a major factor related to loss-of-control and tip-over accidents, which can result in severe injury or death. All slopes require extra caution. If you cannot back up the slope or if you feel uneasy on it, do not mow it.

DO

- Mow up and down slopes greater than 5°, not across.
- Mow downhill only on slopes above 10°, never mow uphill. If a steep slope must be ascended, back up the hill, and drive forward down the hill, keeping the machine in gear.
- Remove obstacles such as rocks, tree limbs, etc. from the mowing area. Watch for holes, ruts or bumps, as uneven terrain could overturn the machine. Tall grass can hide obstacles.
- Use slow speed. Choose a low gear so that you will not have to stop or shift while on the slope.
- Follow the manufacturer's recommendations for wheel weight or counterweights to improve stability.
- Use extra care with grass catchers or other attachments. These can change the stability of the machine.
- Keep all movement on slopes slow and gradual. Do not make sudden changes in speed or direction.
- Avoid starting or stopping on a slope. If tires lose traction, disengage the blades and proceed slowly straight down the slope.

DO NOT

- Do not operate machine on hillsides or slopes exceeding 15°.
- Avoid turning on slopes. If you must turn, turn slowly and gradually downhill, if possible.
- Do not mow near drop-offs, ditches, or embankments. The machine could suddenly turn over if a wheel goes over the edge of a cliff or ditch, or if an edge caves in.
- Do not mow on wet grass. Reduced traction could cause sliding.
- Do not try to stabilize the machine by putting your foot on the ground.
- Do not use a grass catcher on steep slopes. Heavy grass bags could cause loss of control or overturn the machine.

Children

Tragic accidents can occur if the operator is not alert to the presence of children. Children are often attracted to the machine and the mowing activity. Never assume that children will remain where you last saw them. The following requirements must be followed to prevent injury to children.

1. Keep children out of the mowing area and under the watchful care of another responsible adult.
2. Be alert and turn the machine off if children enter the area.
3. Before and while backing, look behind and down for small children.
4. Never carry children. They may fall off and be seriously injured or interfere with safe machine operation.
5. Never allow children to operate the machine.
6. Use extra care when approaching blind corners, shrubs, trees, the end of a fence or other objects that may obscure vision.

Service

1. Stop the engine and disconnect spark plug wire(s) before performing any service, repairs, maintenance or adjustments.
2. Use extra care when handling gasoline and other fuels. They are flammable and vapors are explosive.
   A. Use only an approved container.
   B. Never remove the gas cap or add fuel when the engine is running. Allow the engine to cool before refueling. Do not smoke.
   C. Never refuel the machine indoors.
   D. Never store the machine or fuel container inside where there is an open flame, such as near a water heater or furnace.
3. Never run a machine inside a closed area.
4. Keep nuts and bolts tight, especially the blade attachment bolts. Keep equipment in good condition.
5. Never tamper with safety devices. Check safety systems for proper operation before each use.
6. Keep the machine free of grass, leaves, or other debris build-up. Clean up oil or fuel spillage. Allow the machine to cool before storing.
7. Stop and inspect the equipment if you strike an object. Repair, if necessary, before restarting.
8. Grass catcher components are subject to wear, damage and deterioration, which could expose moving parts or allow objects to be thrown. Frequently check components and replace with manufacturer's recommended parts, when necessary.
9. Mower blades are sharp and can cut. Wrap the blade(s) or wear gloves, and use extra caution when servicing them.
10. Use only genuine replacement parts to ensure that original standards are maintained.
11. Check brake operation frequently. Adjust and service as required.
12. Battery acid is poisonous and can cause burns. Avoid contact with skin, eyes and clothing. Protect your face, eyes and clothing when working with a battery.
13. Battery gases can explode. Keep cigarettes, sparks and flames away from battery.

Slope Chart

Read all safety instructions on pages 2-4.

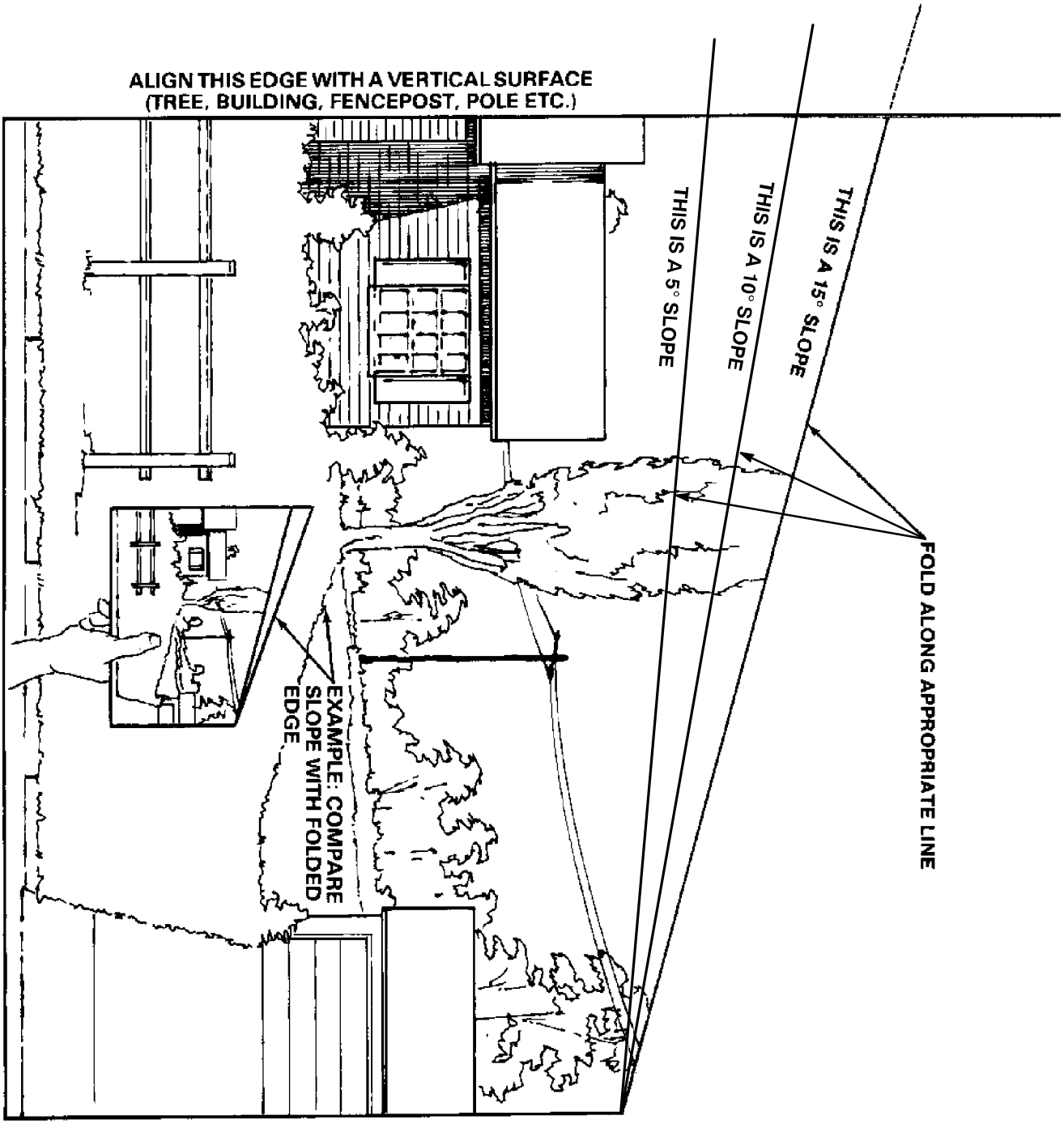

Safety and Instruction Decals

Safety decals and instructions are easily visible to the operator and are located near any area of potential danger. Replace any decal that is damaged or lost.

ON HOODSTAND UNDER STEERING WHEEL
(Part No. 92-9838)

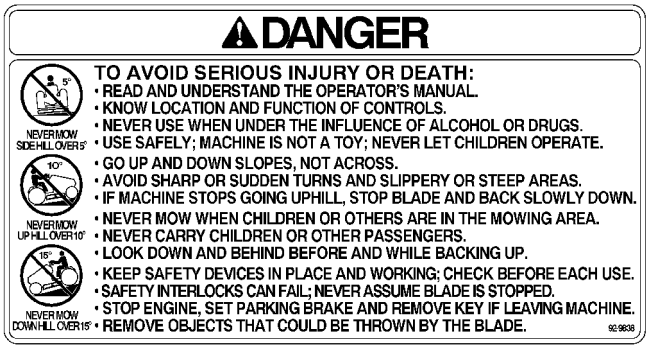

UNDER SEAT
(Part No. 116446)

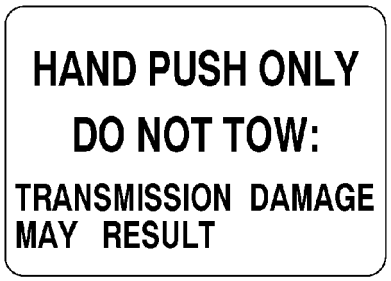

ON RIGHT REAR AXLE
(Part No. 88-2790)



ON LEFT SIDE OF FRAME PLATE NEXT TO PARKING BRAKE CONTROL
(Part No. 116445)

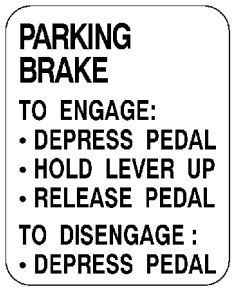

UNDER THROTTLE ON HOODSTAND
(Part No. 111960)



ON FRAME PLATE UNDER STEERING WHEEL
(Part No. 92-8946)



ON TOP OF INSTRUMENT PANEL
(Part No. 78-8350)

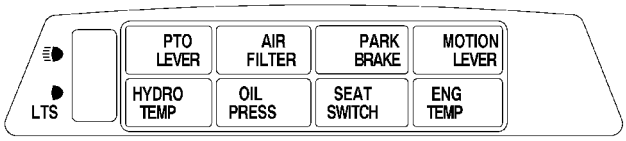

ON LEFT INSIDE HOODSTAND NEXT TO BATTERY
(Part No. 111926)

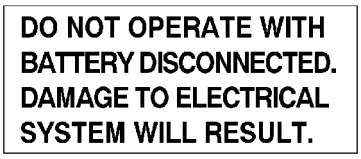

UNDER STEERING WHEEL ON HOODSTAND
(Part No. 119230)

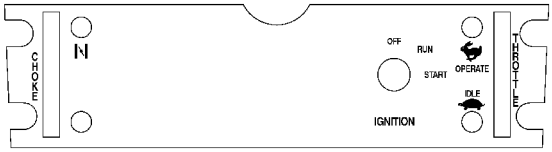

Gasoline and Oil

Recommended Gasoline

Use UNLEADED Regular Gasoline suitable for automotive use (85 pump octane minimum). Leaded regular gasoline may be used if unleaded regular is not available.

IMPORTANT: Never use methanol, gasoline containing methanol, or gasohol containing more than 10% ethanol because the fuel system could be damaged. Do not mix oil with gasoline.

⚠ DANGER

POTENTIAL HAZARD
- **In certain conditions gasoline is extremely flammable and highly explosive.**

WHAT CAN HAPPEN
- **A fire or explosion from gasoline can burn you, others, and cause property damage.**

HOW TO AVOID THE HAZARD
- **Use a funnel and fill the fuel tank outdoors, in an open area, when the engine is cold. Wipe up any gasoline that spills.**
- **Do not fill the fuel tank completely full. Add gasoline to the fuel tank until the level is 1/4" to 1/2" (6 mm to 13 mm) below the bottom of the filler neck. This empty space in the tank allows gasoline to expand.**
- **Never smoke when handling gasoline, and stay away from an open flame or where gasoline fumes may be ignited by a spark.**
- **Store gasoline in an approved container and keep it out of the reach of children. Never buy more than a 30-day supply of gasoline.**

Stabilizer/Conditioner

Add the correct amount of gas stabilizer/conditioner to the gas. Using a stabilizer/conditionerin the machine:

- Keeps gasoline fresh during storage
- Cleans the engine while it runs
- Eliminates gum-like buildup in the fuel system, which causes hard starting

IMPORTANT: Never use fuel additives containing methanol or ethanol.

Filling the Fuel Tank

1. Shut the engine off and raise the seat.
2. Clean around the fuel tank cap and remove the cap. Use a funnel and add unleaded regular gasoline to the fuel tank, until the level is 1/4 to 1/2 inch (6 mm to 13 mm) below the bottom of the filler neck. This space in the tank allows gasoline to expand. Do not fill the fuel tank completely full.
3. Install the fuel tank cap securely. Wipe up any gasoline that may have spilled.
4. Low fuel level is indicated on fuel gauge.

Check Engine Oil Level

Before you start the engine and use the machine, check the oil level in the engine crankcase; refer to Checking Oil Level, page 21.

Operation

Think Safety First

Please carefully read all the safety instructions on pages 2–8. Knowing this information could help you, your family, pets or bystanders avoid injury.

Controls

Become familiar with all the controls (Fig. 1) before you start the engine and operate the machine.

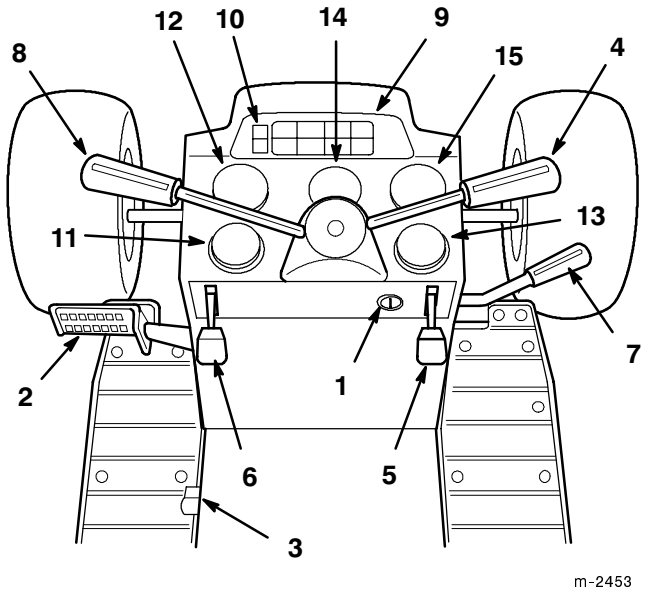

Figure 1

1. Ignition switch
2. Brake pedal
3. Parking brake lever
4. Ground speed selector
5. Throttle lever
6. Choke lever
7. Power take off (PTO)
8. Hydraulic lift lever
9. Indicator control module
10. Light switch
11. Voltmeter
12. Horsepower %
13. Fuel
14. Hourmeter
15. Tachometer

Parking Brake

Always set the parking brake when you stop the machine or leave it unattended.

While the ignition key is in the "RUN" position and the Parking Brake is engaged, the light, in the Indicator Module, will be lit.

Setting the Parking Brake

1. Push the brake pedal (Fig. 2) down and hold it in the depressed position.
2. Lift the parking brake lever (Fig. 2) up and gradually take your foot off the brake pedal. The brake pedal should stay in the depressed (locked) position.

Releasing the Parking Brake

1. Push down on the brake pedal (Fig. 2). The parking brake lever should release.
2. Gradually release the brake pedal.

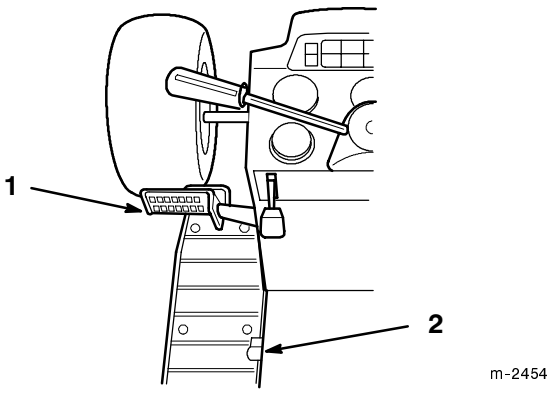

Figure 2

1. Brake pedal
2. Parking brake lever

Starting and Stopping the Engine

Starting

1. Sit down on the seat.
2. Set the parking brake; refer to Setting the Parking Brake, page 9. This automatically returns the motion control lever to neutral.
3. Move the PTO (power take off) to disengage (Fig. 3).
4. Move the choke lever to “ON” (Fig. 3).

   Note: An engine that has been running and is warm may not require step 4.

5. Move throttle lever mid-way between “SLOW” and “FAST” positions (Fig. 4).

   Note: In colder temperatures or when tractor has nor been run for awhile, starting may be easier if the throttle is left in the “SLOW” position.

6. Turn the ignition key clockwise and hold it in the “START” position (Fig. 6). When the engine starts, release the key.

   IMPORTANT: If the engine does not start after 30 seconds of continuous cranking, turn the ignition key to “OFF” and let the starter motor cool; refer to Troubleshooting, page 39.

7. After the engine starts, move the choke lever to “OFF” (Fig. 4). If the engine stalls or hesitates, move the choke lever back to “ON” for a few seconds. Then move the throttle lever to desired setting. Repeat this as required.

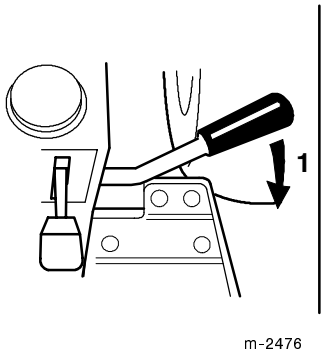

Figure 3

1. PTO—Disengaged

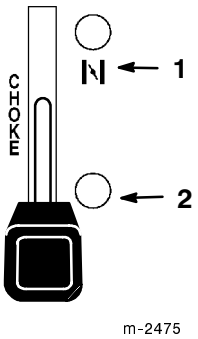

Figure 4

1. Choke-On
2. Choke-Off

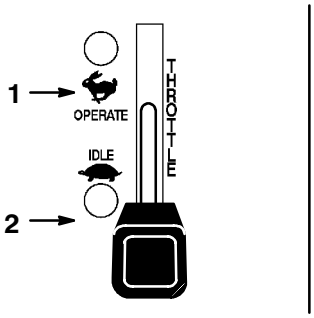

Figure 5

1. Fast
2. Slow

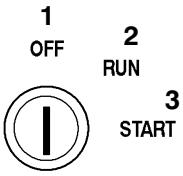

Figure 6

1. Off
2. Run
3. Start

Stopping

1. Move the throttle lever to “SLOW” (Fig. 5).
2. Turn the ignition key to “OFF” (Fig. 6).

   Note: If the engine has been working hard or is hot, let it idle for a minute before turning the ignition key “OFF.” This helps cool the engine before it is stopped. In an emergency, the engine may be stopped by turning the ignition key to “OFF.”

Operating the Power Take Off (PTO)

The power take off (PTO) engages and disengages power to the attachment clutch.

Engaging the Power Take Off (PTO)

1. Depress the brake pedal to stop the machine.
2. Push the power take off (PTO) lever forward to engage (Fig. 7).

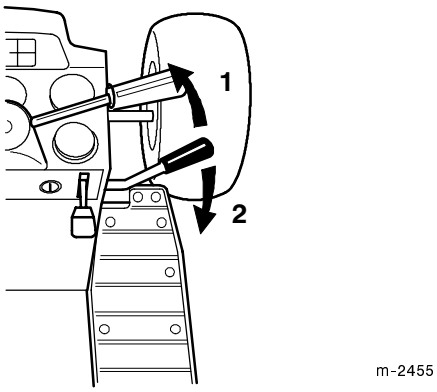

Figure 7

1. Engaged 2. Disengaged

Disengaging the Power Take Off (PTO)

1. Depress the brake pedal to stop the machine.
2. Pull the power take off (PTO) lever back to disengage (Fig. 7).

The Safety Interlock System

Understanding the Safety Interlock System

The safety interlock system is designed to prevent the engine from starting unless:

- You are sitting on the seat
- The power take off (PTO) is disengaged
- The motion control lever is in neutral

The safety interlock system is designed to stop the engine if you rise from the seat when the power take off (PTO) is engaged and the traction control is not in neutral.

Testing the Safety Interlock System

Test the safety interlock system before you use the machine each time. If the safety system does not operate as described below, have an Authorized Service Dealer repair the safety system immediately.

1. Move the power take off (PTO) to engaged. Now turn the ignition key to “START”; the engine should not crank.
2. Move the power take off (PTO) to disengaged and move the motion control (forward or reverse). Now turn the ignition key to “START”; the engine should not crank.
3. Set the parking brake and move the power take off (PTO) to disengaged. Now start the engine. While the engine is running, release the parking brake, engage the power take off (PTO) and rise slightly from the seat; the engine should stop.
4. Set the parking brake and move the power take off (PTO) to disengaged. Now start the engine. While the engine is running, release the parking brake, move the motion control (forward or reverse) and rise slightly from the seat; the engine should stop.

Indicator Control Module

The indicator control module (Fig. 8) has lights that illuminate when certain controls are activated and when major malfunctions occur that need immediate attention.

Following are the conditions when indicator lights will be “ON”. At other times the lights should be off. All lights come on, for a two second test, and the oil light “BLINKS” when the key is turned “ON”.

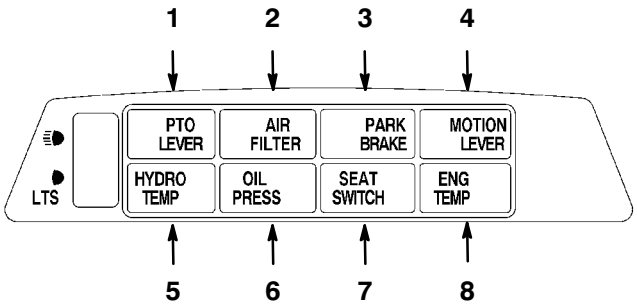

Figure 8

1. PTO (power take off)
2. Air Filter
3. Parking brake
4. Motion lever
5. Hydro Temperature
6. Oil Pressure
7. Seat switch
8. Engine temperature

PTO (Power Take Off)

The PTO (power take off) light will be “ON” when the key is in the “START” position and the PTO (power take off) is engaged “ON”. When this light is “ON” it is a reminder; the starter will not crank if the PTO is engaged

Air Filter

The air filter light comes “ON”, when the engine is running and the foam or paper elements in the air cleaner require service.

Parking Brake

The parking brake light will be “ON” when the key is in the “RUN” position and the parking brake is engaged.

Motion Lever

The motion lever light is “ON” when the key is in the “START” positions and the control is not in neutral. Check that the control lever is in neutral position before starting. Setting the parking brake automatically returns the lever to neutral.

Hydro Temperature

The hydro temperature light comes “ON” when the oil in the transaxle exceeds a safe operating temperature. **Stop immediately and correct the cause of high temperature, clean the transmission fins and check the cooling fan.**

Oil Pressure

The oil light “BLINKS” when the key is “RUN” and “START” positions and the engine is not running, after the engine starts the light should go out. When the engine is running, if the oil pressure drops below a safe operating level the light comes “ON”. When the light comes on while the engine is running, **Stop the engine immediately and correct the cause of low oil pressure.**

Seat Switch

The seat switch light comes “ON” when the seat is unoccupied with the ignition switch in the “START” or “RUN” positions.

Engine Temperature

The temperature light will be “ON” when the key is in the “RUN” position and the engine temperature exceeds proper operating limits. **Stop engine immediately and correct the cause of high temperature.**

Instruments

The gauges show conditions that need to be monitored during tractor operation. Read them to check operation immediately after starting the engine and regularly during use.

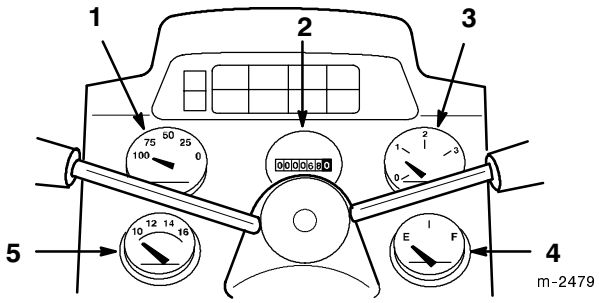

Figure 9

1. Horsepower %
2. Hour meter
3. Tachometer
4. Fuel
5. Voltmeter

Horsepower %

This horsepower % measures the load applied to the engine. As the load increases, the gauge reading will increase. The gauge should read between 25 and 75 for normal operation.

> **IMPORTANT: With the engine running at full throttle, the load should be reasonably heavy for the first 25 hours of operation to seat the piston rings.**

Hour Meter

The hour meter records the number of hours the engine has operated. It operates when the engine is running. Use these times for scheduling regular maintenance.

Tachometer

The tachometer measures engine rpm (revolutions per minute). The gauge operates when the engine is running. 3600 rpm is maximum no load. If the gauge reads less than specifications, contact your Authorized Toro Wheel Horse Dealer for service.

Fuel Gauge

The fuel gauge shows the level of fuel in the tank. Refill the tank with fuel as the gauge approaches the “E” marking.

Voltmeter

The voltmeter shows the electrical system battery voltage. When you turn the ignition key to “RUN”, the gauge should read 12 volts or slightly higher. After the engine starts, the gauge should read between 12 and 15 volts. If the gauge reads less than 12 volts, the battery is discharging. If the gauge reads 15 volts for long periods of time, check the battery water more often.

Driving Forward or Backward

The throttle control regulates the engine speed as measured in rpm (revolutions per minute). Place the throttle control in the “FAST” position for best performance.

To go forward release the parking brake: refer to Releasing the Parking Brake, page 9. Place your hand on the traction control lever and slowly push forward on the lever to move forward (Fig. 10).

To slow down, move the traction control toward neutral.

To move backward push down and pull backward on the traction control lever (Fig. 10).

The farther you move the traction control lever in either direction, the faster the machine will move in that direction.

For quick stops apply the brake. The traction control lever will automatically return to neutral.

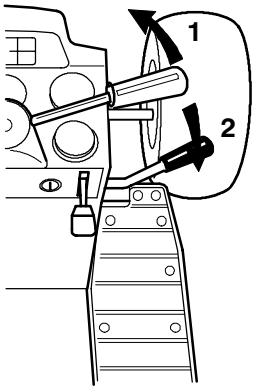

Figure 10

1. Forward
2. Backward

Stopping the Machine

To stop the machine, move the traction control lever to neutral, disengage the power take off (PTO), and turn the ignition key to “OFF” to stop the engine. Also set the parking brake if you leave the machine unattended; refer to Setting the Parking Brake, page 9. Remember to remove the key from the ignition switch.

⚠ CAUTION

POTENTIAL HAZARD

- **Someone could move or attempt to operate the tractor while it is unattended.**

WHAT CAN HAPPEN

- **Children or bystanders may be injured if they use the tractor.**

HOW TO AVOID THE HAZARD

- **Always remove the ignition key and set the parking brake when leaving the machine unattended, even if just for a few minutes.**

Attachment Power Lift

The attachment power lift (Fig. 11) is used to raise and lower attachments.

Raising Attachments

1. Start the engine, refer to; Starting and Stopping the Engine, page 10.
2. Pull the lift lever in the “UP” direction to raise the attachment lift (Fig. 11). This will lift and hold the attachment in the up, or raised position.

Lowering Attachments

1. Start the engine, refer to; Starting and Stopping the Engine, page 10.
2. Push the lift lever in the “DOWN” direction to lower the attachment lift (Fig. 11). This will lower the attachment lift.

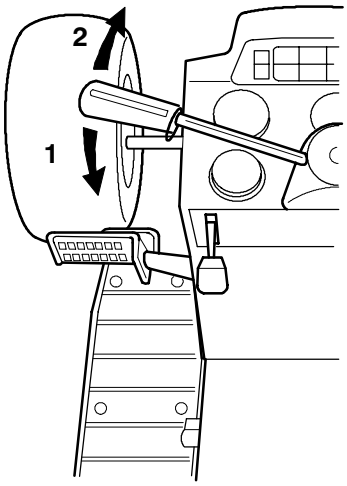

Figure 11

1. Lift lever UP
2. Lift lever DOWN

Positioning the Seat

The seat can move forward and backward. Position the seat where you have the best control of the machine and are most comfortable.

1. To adjust move the lever sideways to unlock seat (Fig. 12).
2. Slide the seat to the desired position and release lever to lock in position.

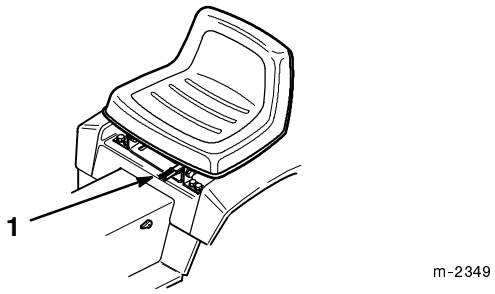

Figure 12

1. Adjustment knob

Lights

The lights are turned on with a switch in the control panel (Fig. 13). The lights are on while the ignition switch is in the “Run” position even with the engine off. Remove the key when the machine is left unattended so lights can not be left on, discharging the battery.

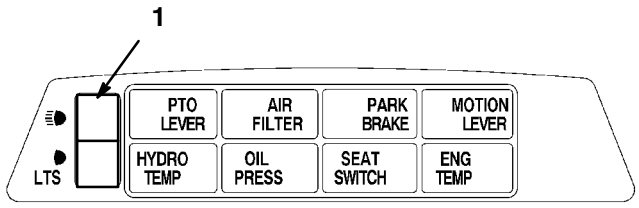

Figure 13

1. Light switch

Installing PTO Belt

1. Park the machine on a level surface, disengage the power take off (PTO), set the parking brake, and turn the ignition key to “OFF” to stop the engine. Remove the key.
2. Remove the PTO cover.
3. Remove hairpin cotter and trunnion from PTO engagement plate (Fig. 14).
4. Unlatch and remove clevis pin that secures yoke to clutch shaft and pivot yoke out and forward to remove clutch shaft from (Fig. 14).
5. Install belt in PTO pulley groove (Fig. 14).

   Note: Install belt in inside pulley groove for mowers and outside pulley groove for tiller and snowthrower.

   Note: For tillers, remove hairpin cotter bottom of yoke and place in belt loop.
6. Assemble yoke to clutch shaft and engagement plate. Attach clevis pin, trunnion and hairpin cotter to secure (Fig. 14).
7. Install the PTO cover.

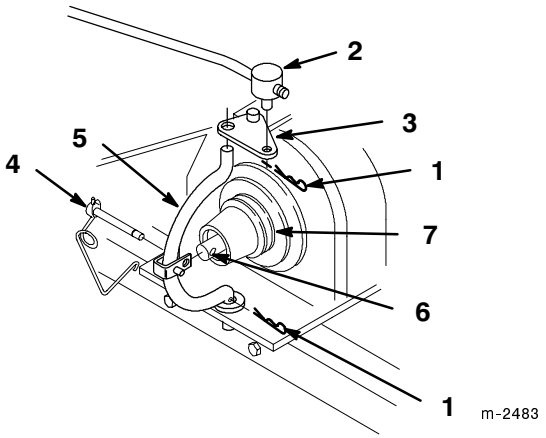

Figure 14

1. Hairpin cotter
2. Trunnion
3. Engagement plate
4. Clevis pin
5. Yoke
6. Clutch shaft
7. PTO pulley

Pushing the Machine by Hand

1. Disengage the power take off (PTO) and turn the ignition key to “OFF” to stop the engine.
2. Disengage the parking brake, so the wheels can turn, and push slowly.

   Note: If pushed fast by-pass valves in the transaxle may close stopping the flow of fluid and the tractor. If this happens stop pushing, then start again slowly.

IMPORTANT: Always push the machine by hand. Never tow the machine because transaxle damage may occur.

Maintenance

Service Interval Chart

Service Operation	Each Use	25 Hours	50 Hours	100 Hours	200 Hours	Storage Service	Spring Service
Oil—check level	X						
Oil—change*		Initial	X			X	
Oil Filter—change* (every other oil change)		Initial		X		X	
Safety System—check	X						X
Brake—check	X					X	X
PTO Brake-adjust (once a year)				X		X	
Chassis—grease*		X				X	
Foam Air Cleaner—service*			X			X	
Paper Air Cleaner—replace*					X		
Spark Plug(s)—check					X	X	X
Crankcase breather—clean					X	X	
Belts—check for wear/cracks			X			X	
Gasoline—drain						X	
Engine and transaxle fins—clean outside	X			X		X	
Chipped Surfaces—paint						X	
Battery—check electrolyte	X					X	X
Battery—charge, disconnect cables						X	
Fuel Filter—replace					X	X	
Tires—check pressure		X				X	X
Front Wheels-check toe-in				X		X	
Transaxle Fluid-check level	X					X	X
Transaxle Fluid-change* (200 hours or once a year)					X	X	X
Transmission Filter—change* (200 hours or once a year)	Initial 10 hrs				X	X	
* More often in dusty, dirty conditions							

⚠ CAUTION

POTENTIAL HAZARD

- **If you leave the key in the ignition switch, someone could start the engine.**

WHAT CAN HAPPEN

- **Accidental starting of the engine could seriously injure you or other bystanders.**

HOW TO AVOID THE HAZARD

- **Remove the key from the ignition switch and pull the wire(s) off the spark plug(s) before you do any maintenance. Also push the wire(s) aside so it does not accidentally contact the spark plug(s).**

Air Cleaner

Service Interval/Specification

Foam Element: Clean and re-oil after every 50 operating hours, or once a year, whichever occurs first.

Paper Element: Replace after every 200 operating hours or once a year, whichever occurs first.

Note: Service the air cleaner more frequently (every few hours) if operating conditions are extremely dusty or sandy.

Removing the Foam and Paper Elements

1. Disengage the power take off (PTO), set the parking brake, and turn the ignition key to "OFF" to stop the engine. Remove the key.
2. Open the hood.
3. Clean around the air cleaner and move choke to "ON" to prevent dirt from getting into the engine and causing damage. Remove the knob and air cleaner cover (Fig. 15).

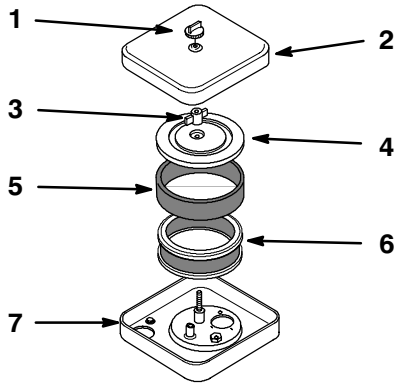

Figure 15

1. Knob
2. Air cleaner cover
3. Wing nut
4. Cover
5. Foam element
6. Paper element
7. Air cleaner base

4. Unscrew the wing nut and remove the cover, foam element and paper element (Fig. 15).
5. Carefully slide the foam element off the paper element (Fig. 15).

Cleaning the Foam and Paper Elements

1. Foam Element

   A. Wash the foam element in liquid soap and warm water. When the element is clean, rinse it thoroughly.

   B. Dry the element by squeezing it.

   C. Put one or two ounces of oil on the element (Fig. 16). Squeeze the element to evenly distribute the oil.

IMPORTANT: Replace the foam element if it is torn or worn.

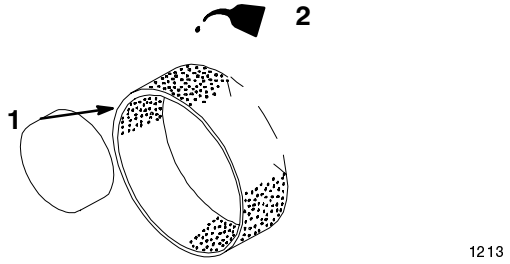

Figure 16

1. Foam element
2. Oil

2. Paper Element

A. Lightly tap the element on a flat surface to remove dust and dirt (Fig. 17).

B. Inspect the element for tears, an oily film, and damage to the rubber seal.

IMPORTANT: Never clean the paper element with pressurized air or liquids, such as solvent, gas, or kerosene. Replace the paper element if it is damaged, defective, or cannot be cleaned thoroughly.

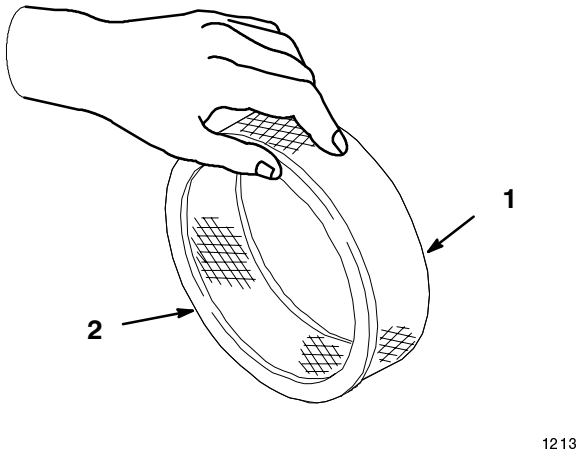

Figure 17

1. Paper element
2. Rubber seal

3. Installing the Foam and Paper Elements

IMPORTANT: To prevent engine damage, always operate the engine with the complete foam and paper air cleaner assembly installed.

1. Carefully slide the foam element onto the paper air cleaner element (Fig. 15).

2. Place the air cleaner assembly into air cleaner base. Slide cover onto rod and secure with wing nut (Fig. 15).

3. Install the air cleaner cover and secure with knob (Fig. 15).

4. Close the hood.

Engine Oil

Service Interval/Specification

Change oil:

- After the first 25 operating hours.
- After every 50 operating hours.

Note: Change oil more frequently when operating conditions are extremely dusty or sandy.

Oil Type: Detergent oil (API service SG, SH, SG/CD, SG/CE, SH/CD or SH/CE)

Crankcase Capacity: w\o filter, 1.5 quarts (1.4 l) with filter, 1.8 quarts (1.7 l)

Viscosity: See table below

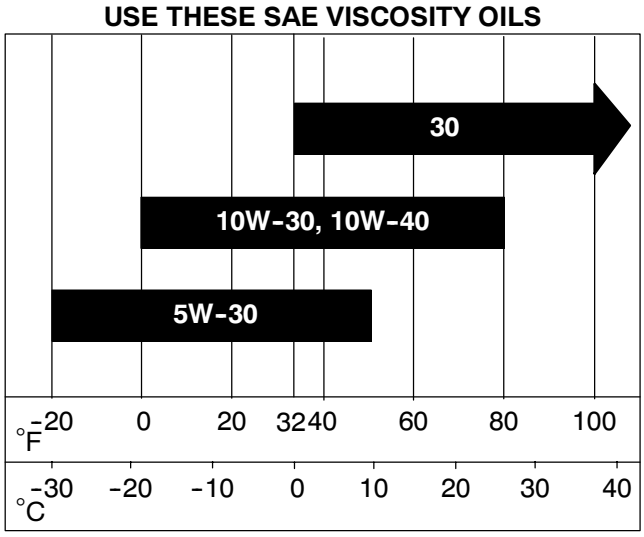

Checking Oil Level

1. Park the machine on a level surface, disengage the power take off (PTO), set the parking brake, and turn the ignition key to “OFF” to stop the engine. Remove the key.
2. Open the hood.
3. Clean around the oil dipstick (Fig. 18) so dirt cannot fall into the filler hole and damage the engine.
4. Unscrew the oil dipstick and wipe the metal end clean (Fig. 18).
5. Slide the oil dipstick fully into the filler tube, do not thread onto tube (Fig. 18). Pull the dipstick out and look at the metal end. If oil level is low, slowly pour only enough oil into the filler tube to raise the level to the “FULL” mark.

IMPORTANT: Do not overfill the crankcase with oil because the engine may be damaged.

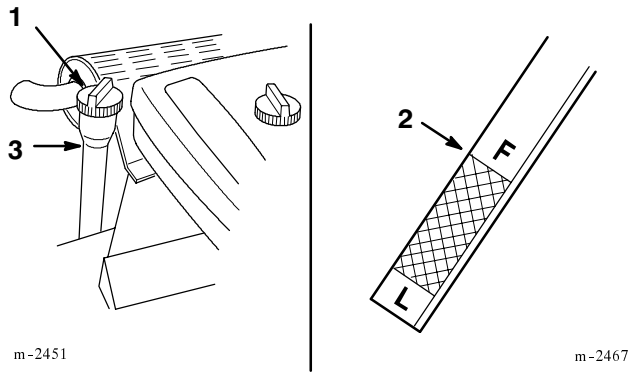

Figure 18

1. Oil dipstick
2. Metal end
3. Filler tube

Changing/Draining Oil

1. Start the engine and let it run five minutes. This warms the oil so it drains better.
2. Park the machine so that the drain side is slightly lower than the opposite side to assure the oil drains completely. Then disengage the power take off (PTO), set the parking brake, and turn the ignition key to “OFF” to stop the engine. Remove the key.
3. Open the hood.
4. Place a pan below the oil drain. Open the drain by removing the cap (Fig. 19).
5. When oil has drained completely, replace cap.

   Note: Dispose of the used oil at a certified recycling center.

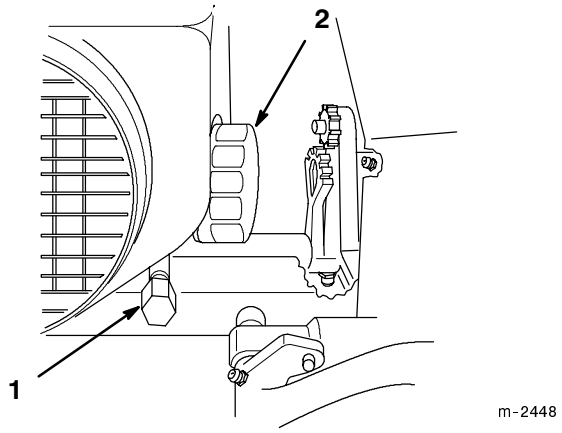

Figure 19

1. Oil drain cap
2. Oil filter

6. Slowly pour approximately 80% of the specified amount of oil into the filler tube (Fig. 18). Now check the oil level; refer to Checking Oil Level, page 21. Slowly add additional oil to bring to “FULL” mark on dipstick.

Change Oil Filter

Service Interval/Specification

Replace the oil filter every 100 hours or every other oil change.

Note: Change oil filter more frequently when operating conditions are extremely dusty or sandy.

1. Drain the oil from the engine; refer to Changing/Draining Oil, page 22.
2. Remove the old filter and wipe the filter adapter (Fig. 20) gasket surface.
3. Apply a thin coat of new oil to the rubber gasket on the replacement filter (Fig. 20).

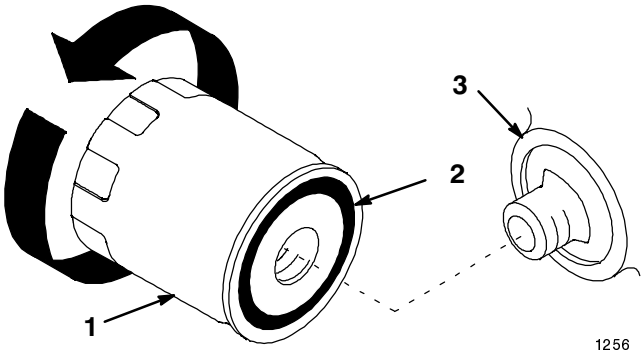

Figure 20

1. Oil filter
2. Gasket
3. Adapter

4. Install the replacement oil filter to the filter adapter. Turn the oil filter clockwise until the rubber gasket contacts the filter adapter, then tighten the filter an additional 1/2 turn (Fig. 20).
5. Fill the crankcase with the proper type of new oil; refer to Changing/Draining Oil, page 22.

Spark Plug

Service Interval/Specification

Check the spark plug(s) after every 200 operating hours. Make sure the air gap between the center and side electrodes is correct before installing the spark plug. Use a spark plug wrench for removing and installing the spark plug(s) and a gapping tool/feeler gauge to check and adjust the air gap.

Type: Champion RS17YX (or equivalent)
Air Gap: 0.025” (.635 mm)

Removing the Spark Plug(s)

1. Disengage the power take off (PTO), set the parking brake, and turn the ignition key to “OFF” to stop the engine. Remove the key.
2. Open the hood.
3. Pull the wire(s) off the spark plug(s) (Fig. 21). Now clean around the spark plug(s) to prevent dirt from falling into the engine and potentially causing damage.
4. Remove the spark plug(s) and metal washer.

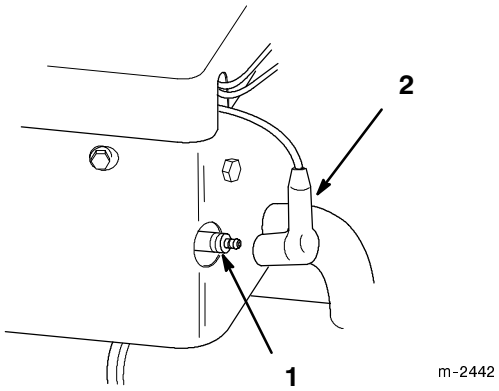

Figure 21

1. Spark plug wire
2. Spark plug

Checking the Spark Plug

1. Look at the center of the spark plug(s) (Fig. 22). If you see light brown or gray on the insulator, the engine is operating properly. A black coating on the insulator usually means the air cleaner is dirty.

   IMPORTANT: Never clean the spark plug(s). Always replace the spark plug(s) when it has: a black coating, worn electrodes, an oily film, or cracks.

2. Check the gap between the center and side electrodes (Fig. 22). Bend the side electrode (Fig. 22) if the gap is not correct.

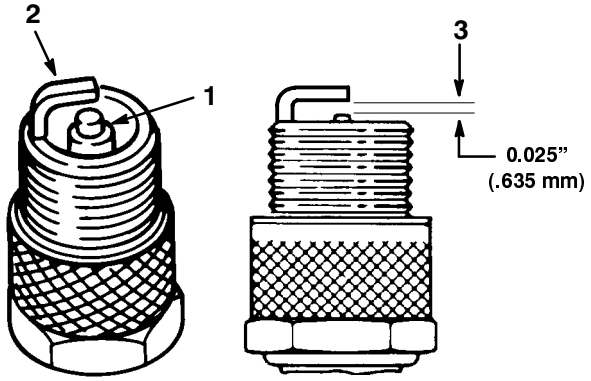

Figure 22

1. Center electrode insulator
2. Side electrode
3. Air gap (not to scale)

Installing the Spark Plug(s)

1. Install the spark plug(s) and metal washer. Make sure the air gap is set correctly.
2. Tighten the spark plug(s) to 11 ft-lb (14 Nm).
3. Push the wire(s) onto the spark plug(s) (Fig. 21).
4. Close the hood.

Engine Breather

Service Interval/Specification

Clean the engine breather after every 200 operating hours or yearly, whichever occurs first.

1. Disengage the power take off (PTO), set the parking brake, and turn the ignition key to "OFF" to stop the engine. Remove the key.
2. Clean around the air cleaner and move choke to "ON" to prevent dirt from getting into the engine and causing damage.
3. Remove the air filter; refer to Remove the Foam and Paper elements page 19.
4. Remove the air filter base mounting bolts and screws. Slide base off breather tube (Fig. 23).

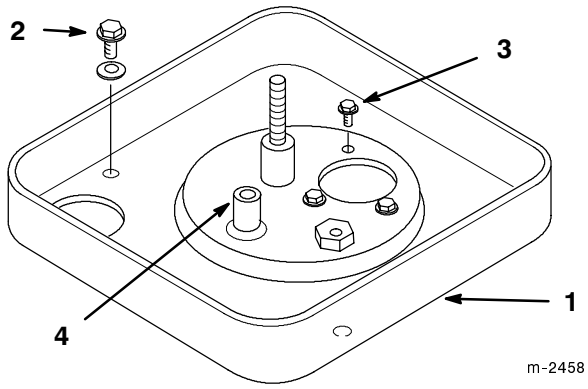

Figure 23

1. Air filter base
2. Bolt and washer
3. Screw
4. Breather tube

5. Open breather clamp and remove screen and baffle (Fig.).
6. Clean screen and baffle in an approved solvent and dry in a paper towel.
7. Install baffle and screen and secure breather with clamp (Fig.).
8. Install air filter base and assemble air filter (Fig. 23).

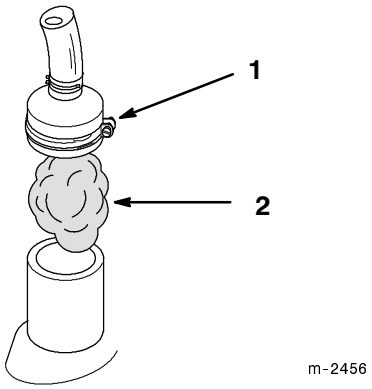

Figure 24

1. Clamp
2. Baffle

Greasing and Lubrication

Service Interval/Specification

Grease the machine after every 25 operating hours or yearly, whichever occurs first. Grease more frequently when operating conditions are extremely dusty or sandy.

Grease Type: General-purpose grease.

How to Grease

1. Disengage the power take off (PTO), set the parking brake, and turn the ignition key to "OFF" to stop the engine. Remove the key.
2. Clean the grease fittings with a rag. Make sure to scrape any paint off the front of the fitting(s).
3. Connect a grease gun to the fitting. Pump grease into the fittings until grease begins to ooze out of the bearings.
4. Wipe up any excess grease.

Where to Add Grease

1. Lubricate the front wheels, spindles and tie-rod ends until grease begins to ooze out of the bearings (Fig. 25).
2. Lubricate the front axle pivot (Fig. 25).

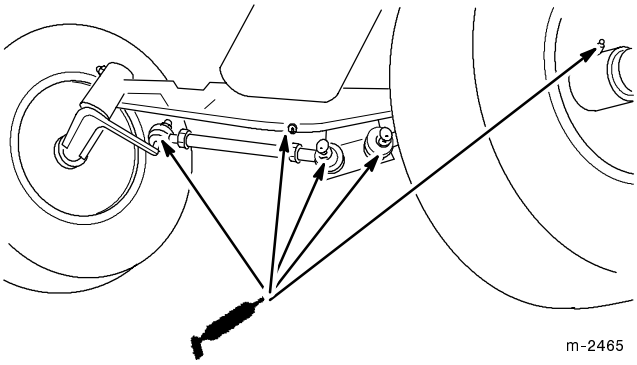

Figure 25

3. Lubricate the brake pedal where it pivots on mounting shaft, steering shaft and spread grease on steering sector teeth (Fig. 26).

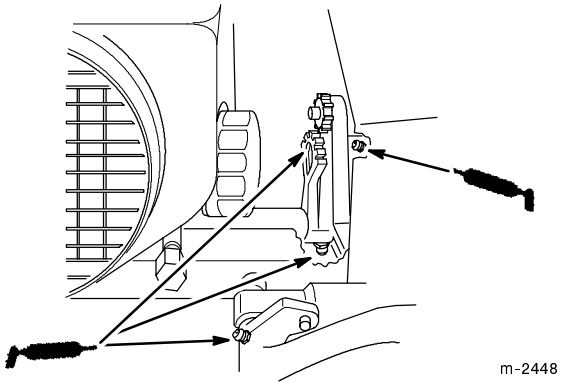

Figure 26

Tire Pressure

Service Interval/Specification

Maintain the air pressure in the front and rear tires as specified. Check the pressure at the valve stem after every 25 operating hours or monthly, whichever occurs first (Fig. 27). Check the tires when they are cold to get the most accurate pressure reading.

Pressure: 12 psi (.85 kPa) front and rear

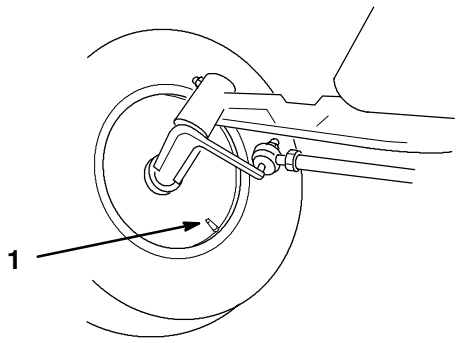

Figure 27

1. Valve stem

Brake

Always set the parking brake when you stop the machine or leave it unattended. Check the brake before each use. If the parking brake does not hold securely, an adjustment is required.

Checking the Brake

1. Park the machine on a level surface, disengage the power take off (PTO), set the parking brake, and turn the ignition key to “OFF” to stop the engine. Remove the key.

2. Rear wheels must lock and skid when you try to push the tractor forward. Adjustment is required if the wheels turn and do not lock; refer to Adjusting the Brake, page 27.

Adjusting the Brake

The brake adjustment is behind the left side cover (Fig. 28). If the parking brake does not hold securely, an adjustment is required.

1. Check the brake before you adjust it; refer to Checking the Brake, page 26.
2. Set parking brake so latch is in second notch. To do this lift up on parking brake lever and slowly depress brake pedal and feel when latch is in second notch.
3. To adjust the brake tighten adjustment nut until large spring is fully compressed, then back off 1/2 turn (Fig. 28).
4. Check the brake operation again; refer to Checking the Brake, page 26.

   IMPORTANT: With the parking brake released, the rear wheels must rotate freely when you push the mower. If brake action and free wheel rotation cannot be achieved contact your service dealer immediately.

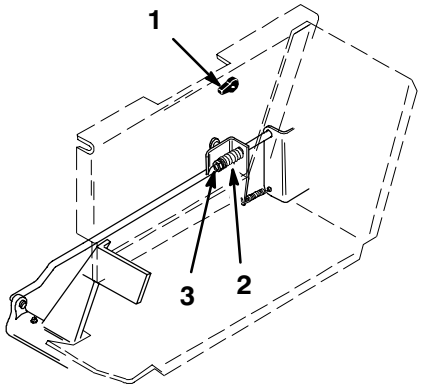

Figure 28

1. Parking brake lever
2. Large spring
3. Adjustment nut

PTO (Power Take Off) Brake

Service Interval/Specification

Check adjustment of PTO brake after every 100 operating hours or once a year, whichever occurs first.

Adjusting PTO Brake

1. Disengage the power take off (PTO), set the parking brake, and turn the ignition key to “OFF” to stop the engine. Remove the key.
2. Engage PTO clutch.
3. Loosen (2) adjustment nuts (Fig. 29).
4. Place a 0.012” (0.3 mm) feeler gauge between brake pad and clutch pulley (Fig. 29).
5. Holding brake pad against feeler gauge tighten adjusting nuts. (Fig. 29).

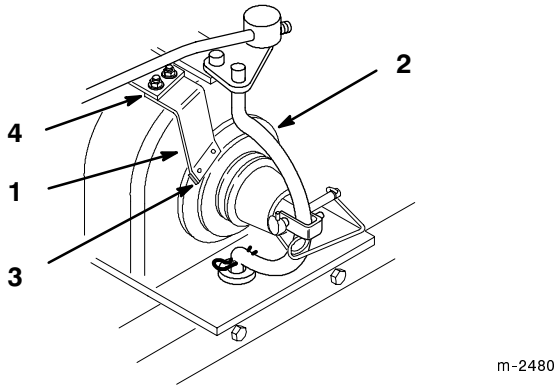

Figure 29

1. Brake pad
2. Pulley
3. 0.012” (0.3mm) feeler gauge
4. Adjustment nut

Front Wheel Toe-In

Service Interval/Specification

Maintain toe-in of the front wheels as specified. If uneven tire wear, lawn scuffing or hard steering develop adjustment may be required. Check the toe-in after every 100 operating hours or once a year, whichever occurs first (Fig. 30).

Specification: 1/8-1/4 inch (3.5-6.5 mm) toe-in on front wheels.

Measuring Toe-in

1. Disengage the power take off (PTO), set the parking brake, and turn the ignition key to "OFF" to stop the engine. Remove the key.
2. Push front tires out, at front, to remove normal looseness in the linkage.
3. Measure, between the rims, at spindle level, in the front and rear of the wheels (Fig. 30).
4. The front measurement should be less than the rear as specified..

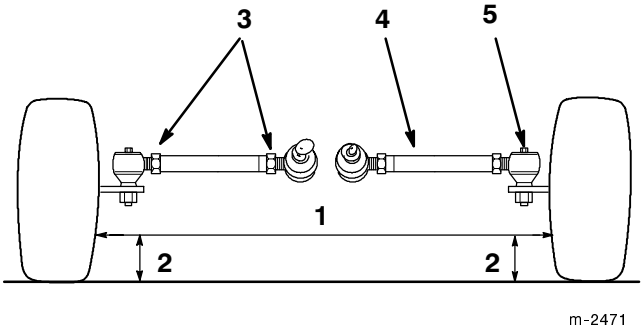

Figure 30

1. Measure here
2. 6" (150 mm) off ground
3. Jam nut
4. Steering rod
5. Ball joint

Adjusting Toe-In

1. Check the toe-in before you adjust it; refer to Measuring Toe-In, Page 28.
2. Loosen jam nut securing ball joint to steering rod. Rotate steering rod one turn, counter clockwise to increase or clockwise to decrease toe-in.
3. Tighten jam nut to secure ball joint and check the toe-in; refer to Measuring Toe-In, Page 32.

   IMPORTANT: If more than one turn is required to meet specifications, alternate between left and right steering rods to maintain steering wheel alignment.

Fuel Tank

Draining The Fuel Tank

⚠ DANGER

POTENTIAL HAZARD
- **In certain conditions gasoline is extremely flammable and highly explosive.**

WHAT CAN HAPPEN
- **A fire or explosion from gasoline can burn you, others, and cause property damage.**

HOW TO AVOID THE HAZARD
- **Drain gasoline from the fuel tank when the engine is cold. Do this outdoors in an open area. Wipe up any gasoline that spills.**
- **Never drain gasoline near an open flame or where gasoline fumes may be ignited by a spark.**
- **Never smoke a cigarette, cigar or pipe.**

1. Park the machine on a level surface, to assure fuel tank drains completely. Then disengage the power take off (PTO), set the parking brake, and turn the ignition key to “OFF” to stop the engine. Remove the key.

2. Close fuel shut-off valve at fuel tank (Fig. 31).

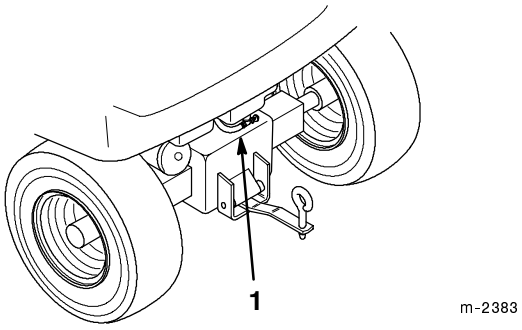

Figure 31

1. Fuel shut-off valve

3. Loosen the hose clamp and slide it up the fuel line away from the fuel shut-off valve (Fig. 32).

4. Pull the fuel line off fuel shut-off valve (Fig. 32). Open fuel shut-off valve and allow gasoline to drain into a gas can or drain pan.

   Note: Now is the best time to install a new fuel filter because the fuel tank is empty.

5. Install the fuel line onto the fuel shut-off valve. Slide the hose clamp close to the fuel shut-off valve to secure the fuel line (Fig. 32).

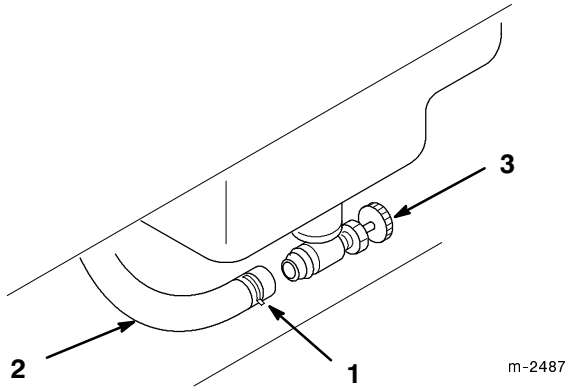

Figure 32

1. Hose clamp
2. Fuel line
3. Fuel shut-off valve

Fuel Filter

Service Interval/Specification

Replace the fuel filter after every 200 operating hours or once a year, whichever occurs first.

Replacing the Fuel Filter

1. Disengage the power take off (PTO), set the parking brake, and turn the ignition key to "OFF" to stop the engine. Remove the key.
2. Close fuel shut-off valve at fuel tank (Fig. 31).
3. Open the hood.
4. Squeeze the ends of the hose clamps together and slide them away from the filter (Fig. 33).
5. Remove the filter from the fuel lines.

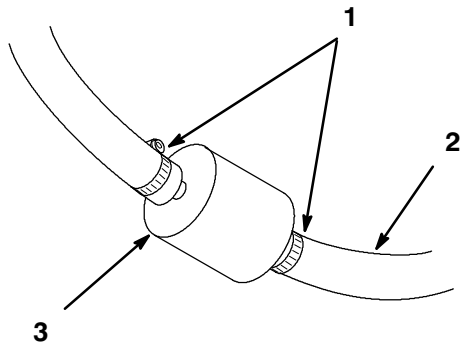

Figure 33

1. Hose clamp
2. Fuel line
3. Filter

6. Install a new filter and move the hose clamps close to the filter.
7. Open fuel shut-off valve at fuel tank (Fig. 31).
8. Close the hood.

Transaxle Fluid

Service Interval/Specification

Check fluid level before every use. Always keep the fluid level at the full level when the transaxle is cold.

Fluid Type: SAE 10W-30 Detergent oil (API service SF or SG)

Checking Fluid Level

1. Park the machine on a level surface, disengage the power take off (PTO), set the parking brake, and turn the ignition key to "OFF" to stop the engine. Remove the key.
2. Tilt the seat up.
3. Clean around the transmission dipstick (Fig. 34) so dirt cannot fall into the filler hole and damage the transaxle.

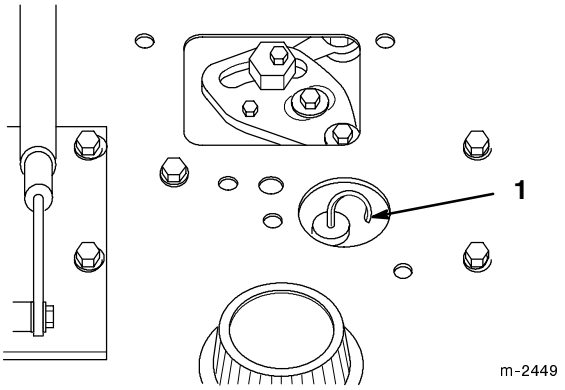

Figure 34

1. Transmission dipstick

4. Pull out the transmission dipstick and wipe the metal end clean (Fig. 34).

5. Slide the transmission dipstick fully into the filler tube (Fig. 18). Pull the dipstick out and look at the metal end. When transaxle is cold oil should be at the “Full” line on the dipstick (Fig. 34).

6. If oil level is low, slowly pour only enough oil into the filler tube to raise the level to the “FULL” mark.

   IMPORTANT: Do not fill above the “Full” line as fluid may overflow.

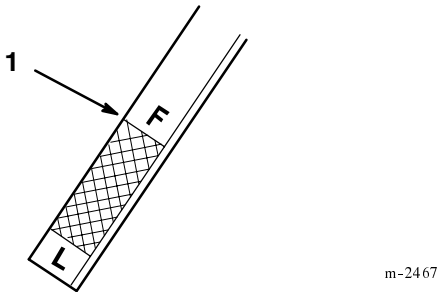

Figure 35

1. Full cold level

Changing/Draining Transaxle Fluid

Service Interval/Specification

Replace the transaxle fluid every 200 hours or once a year.

Fluid Type: SAE 10W–30 Detergent oil (API service SF or SG)

1. Park the machine so that the drain side is slightly lower than the opposite side to assure the oil drains completely. Then disengage the power take off (PTO), set the parking brake, and turn the ignition key to “OFF” to stop the engine. Remove the key.

2. Place a pan below the transaxle drain. Open the drain by removing the plug (Fig. 36).

3. When oil has drained completely, install the plug.

   Note: Dispose of the used oil at a certified recycling center.

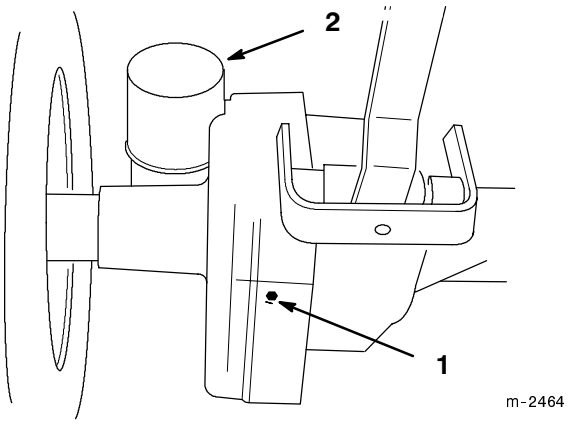

Figure 36

1. Transaxle drain plug
2. Transaxle filter

4. Slowly pour approximately 80% of the specified amount of oil into the filler tube (Fig. 34). Now check the fluid level; refer to Checking Transaxle Fluid Level, page 30. Slowly add additional oil to bring to “FULL” mark on dipstick.

Change Transaxle Filter

Service Interval/Specification

Replace the transaxle filter after the first 10 hours then every 200 hours or once a year, whichever comes first.

1. Remove the transaxle filter and wipe the filter adapter (Fig. 37) gasket surface.
2. Apply a thin coat of new oil to the rubber gasket on the replacement filter (Fig. 37).

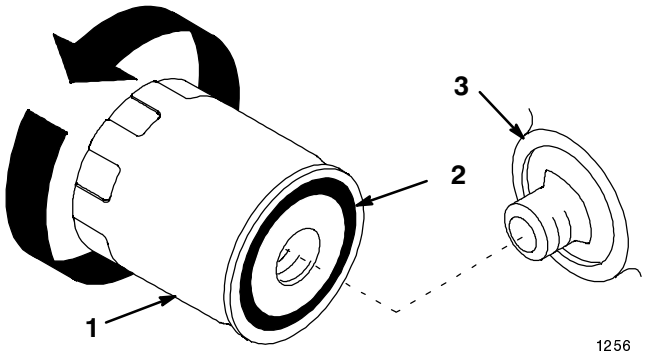

Figure 37

1. Transaxle filter
2. Gasket
3. Adapter

3. Install the replacement transaxle filter to the filter adapter. Turn the filter clockwise until the rubber gasket contacts the filter adapter, then tighten the filter an additional 1/2 turn (Fig. 37).
4. Fill the transaxle with the proper type of new oil; refer to Changing/Draining Transaxle Fluid, page 31.

Headlights

Removing the Bulb

1. Disengage the power take off (PTO), set the parking brake, and turn the ignition key to "OFF" to stop the engine. Remove the key.
2. Open the hood. Pull wire connectors off light terminals.
3. Remove screw securing retainer bracket (Fig. 38).
4. Lift and twist bulb out of pocket (Fig. 38).

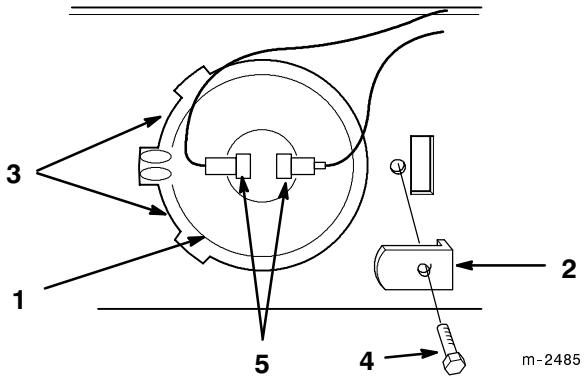

Figure 38

1. Bulb
2. Retainer bracket
3. Tabs
4. Screw
5. Terminals

Installing the Bulb

1. Locate index boss horizontal and twist bulb under tabs on left side of pocket (Fig. 38).
2. Hold bulb in socket with retainer bracket and secure with screw (Fig. 38).
3. Push wire connectors onto bulb terminals (Fig. 38).

Taillights

Removing the Bulb

1. Disengage the power take off (PTO), set the parking brake, and turn the ignition key to “OFF” to stop the engine. Remove the key.
2. Inserting a screwdriver into slot and twist to remove lens (Fig. 39).
3. Pull bulb out of socket

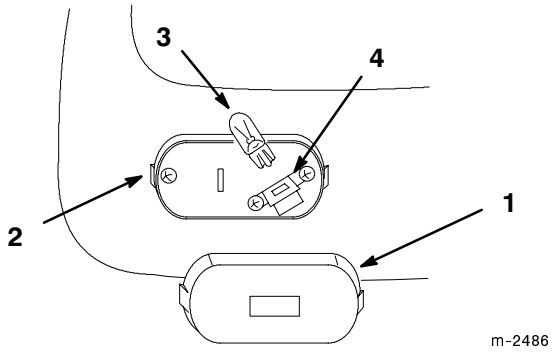

Figure 39

1. Lens
2. Slot
3. Bulb
4. Socket

Installing the Bulb

1. Align the bulb base with socket and push into position (Fig. 39).
2. Align and snap the lens onto the base (Fig. 39).

Battery

Service Interval/Specification

Check the electrolyte level in the battery before each use. Always keep the battery clean and fully charged. Use a paper towel to clean the battery case. If the battery terminals are corroded, clean them with a solution of four parts water and one part baking soda. Apply a light coating of grease to the battery terminals to prevent corrosion.

Rating: 12 volts, 280 Cold Cranking Amps

Removing the Battery

1. Disengage the power take off (PTO), set the parking brake, and turn the ignition key to "OFF" to stop the engine. Remove the key.

2. Open the hood.

3. Disconnect the negative (black) ground cable from the battery post (Fig. 40).

4. Lift the rubber cover up on the positive (red) cable. Disconnect the positive (red) cable from the battery post (Fig. 40).

5. Remove the battery hold down rods (Fig. 40). Lift battery from tractor.

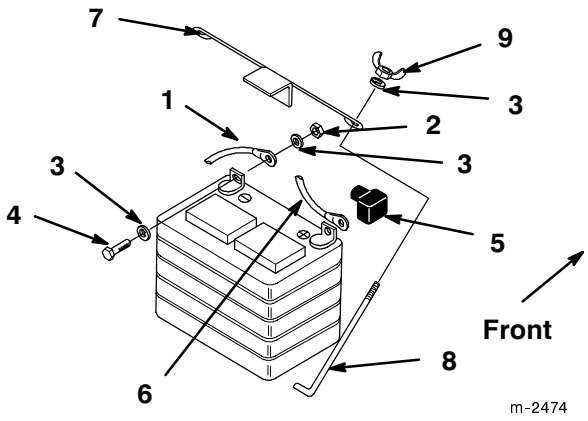

Figure 40

1. Negative cable (black)
2. Nut
3. Washer
4. Bolt
5. Rubber cover
6. Positive cable (red)
7. Battery clamp
8. Hold down rod
9. Wing nut

Installing the Battery

6. Install the battery into the chassis (Fig. 40).

7. Secure battery in chassis with hold down rods, washers and wing nuts (Fig. 40).

8. Using the bolt washers and nut, connect the positive (red) cable to the positive (+) battery post (Fig. 40). Slide the rubber cover over the battery post.

9. Using the bolt, washer and nut, connect the negative (black) cable to the negative (-) battery post (Fig. 40).

Checking Electrolyte Level

1. With the engine off, open the hood.
2. Open covers to see into the cells. The electrolyte must be up to the lower part of the tube (Fig. 41). Do not allow the electrolyte to get below the plates. (Fig. 41).
3. If the electrolyte is low, add the required amount of distilled water; refer to Adding Water to the Battery, page 35.

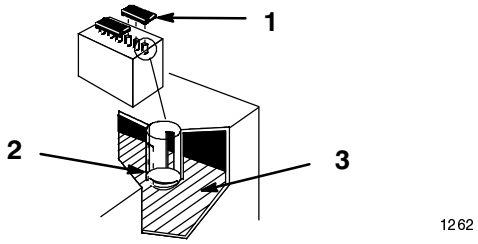

Figure 41

1. Filler caps
2. Lower part of tube
3. Plates

Adding Water to the Battery

The best time to add distilled water to the battery is just before you operate the machine. This lets the water mix thoroughly with the electrolyte solution.

1. Clean the top of the battery with a paper towel.
2. Lift off the filler caps (Fig. 41).
3. Slowly pour distilled water into each battery cell until the level is up to the lower part of the tube (Fig. 41).

   IMPORTANT: Do not overfill the battery because electrolyte (sulfuric acid) can cause severe corrosion and damage to the chassis.
4. Press the filler caps onto the battery.

Charging the Battery

IMPORTANT: Always keep the battery fully charged (1.260 specific gravity). This is especially important to prevent battery damage when the temperature is below 32°F (0°C).

1. Remove the battery from the chassis; refer to Removing the Battery, page 34.
2. Check the electrolyte level; refer to Checking Electrolyte Level, page 35, steps 2–3.
3. Remove the filler caps from the battery and connect a 3 to 4 amp battery charger to the battery posts. Charge the battery at a rate of 4 amperes or less for 4 hours (12 volts). Do not overcharge the battery. Install the filler caps after the battery is fully charged.

⚠ WARNING

POTENTIAL HAZARD
- **Charging the battery produces gasses.**

WHAT CAN HAPPEN
- **Battery gasses can explode.**

HOW TO AVOID THE HAZARD
- **Keep cigarettes, sparks and flames away from battery.**

4. Install the battery in the chassis; refer to Installing the Battery, page 34.

Fuse

Service Interval/Specification

The electrical system is protected by fuses. It requires no maintenance, however, if a fuse blows check component/circuit for malfunction or short. To replace fuses pull up on the fuse (Fig. 42) to remove or replace it.

Fuse: Charging circuit F3–30 amp, blade-type
Main F4–25 amp, blade-type
Lights F2–15 amp, blade-type

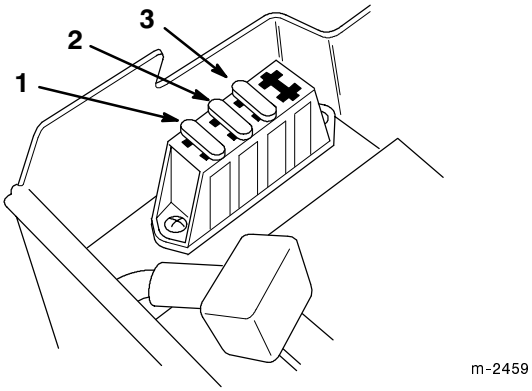

Figure 42

1. Charging circuit-30 amp
2. Main-25 amp
3. Lights-15 amp

Wiring Diagram

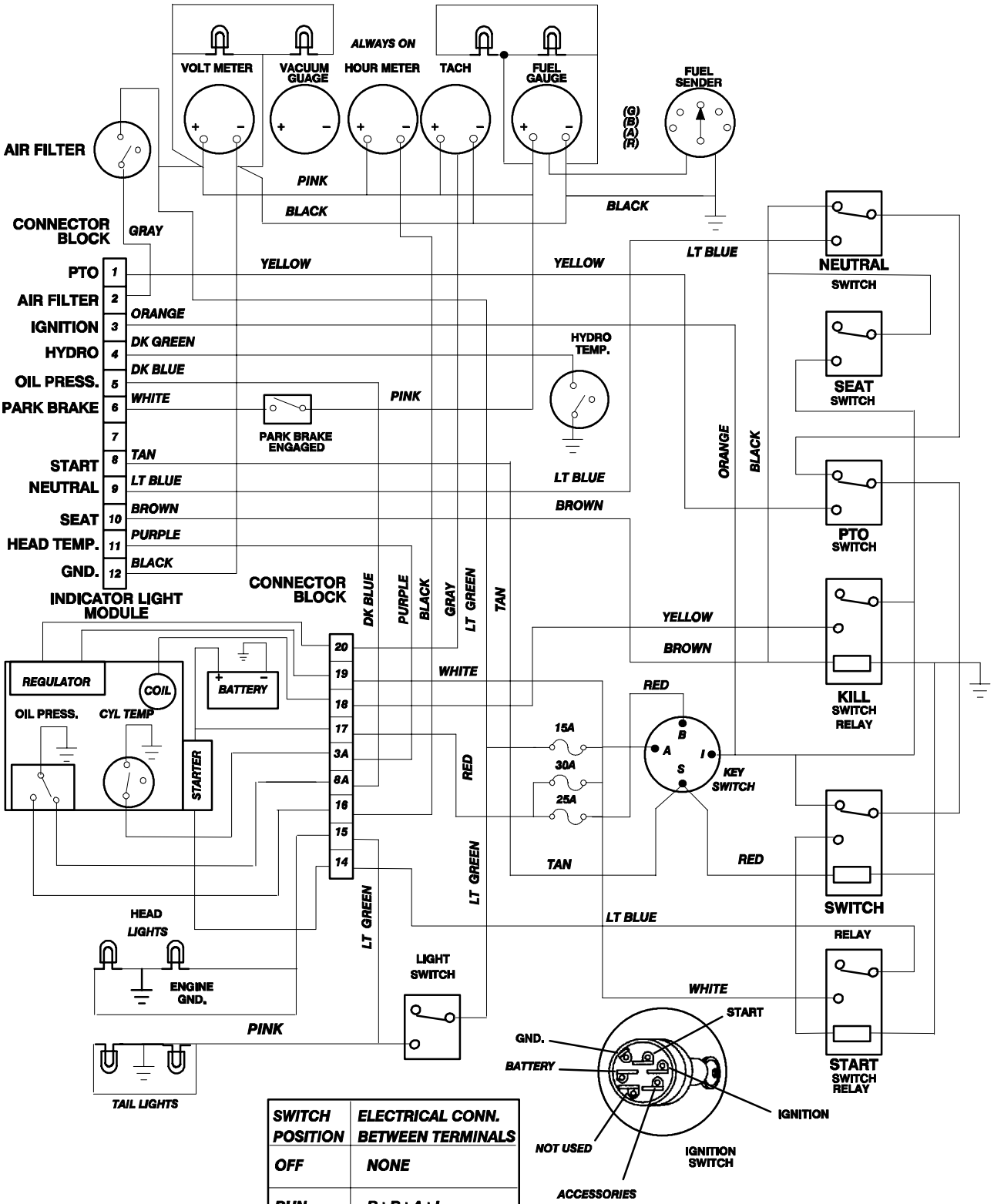

SWITCH POSITION	ELECTRICAL CONN. BETWEEN TERMINALS
OFF	NONE
RUN	B+R+A+I
START	B+S+I+S

Cleaning and Storage

1. Disengage the power take off (PTO), set the parking brake, and turn the ignition key to "OFF" to stop the engine. Remove the key.

2. Remove grass clippings, dirt, and grime from the external parts of the entire machine, especially the engine. Clean dirt and chaff from the outside of the engine's cylinder head fins and blower housing.

   IMPORTANT: You can wash the machine with mild detergent and water. Do not pressure wash the machine. Avoid excessive use of water, especially near the control panel, lights, engine, and the battery.

3. Check the brake; refer to Brake, page 26.

4. Service the air cleaner; refer to Air Cleaner, page 19.

5. Grease the chassis; refer to Greasing and Lubrication, page 25.

6. Change the crankcase oil; refer to Engine Oil, page 21.

7. Remove the spark plug(s) and check its condition; refer to Spark Plug, page 23. With the spark plug(s) removed from the engine, pour two tablespoons of engine oil into the spark plug hole. Now use the electric starter to crank the engine and distribute the oil inside the cylinder. Install the spark plug(s) and tighten it to 15 ft-lb (20.4 Nm). Do not install the wire on the spark plug(s).

8. Remove the battery from the chassis, check the electrolyte level, and charge it fully; refer to Battery, page 34. Do not connect the battery cables to the battery posts during storage.

   IMPORTANT: The battery must be fully charged to prevent it from freezing and being damaged at temperatures below 32°F (0°C). A fully charged battery maintains its charge for about 50 days at temperatures lower than 40°F (4°C). If the temperatures will be above 40°F (4°C), check the water level in the battery and charge it every 30 days.

9. Check the tire pressure; refer to Tire Pressure, page 26.

10. During long-term storage, either drain gasoline from the fuel tank (step A) or add a fuel stabilizer/conditioner additive to a full tank of gasoline (step B).

    A. Drain gasoline from the fuel tank; refer to Fuel Tank, page 29. After fuel is drained, start the engine and let it idle until all gasoline is consumed and the engine stops. This eliminates gum-like buildup in the fuel system, which causes hard starting. Try to start the engine two more times to assure that no gasoline is in the fuel system.

    B. Add the correct amount of fuel stabilizer/conditioner to a full tank of gasoline. Operate engine for 5 minutes to distribute stabilizer/conditioner throughout fuel system.

    Note: Stabilizer/conditioners normally preserve gasoline for six to eight months.

11. Check and tighten all bolts, nuts, and screws. Repair or replace any part that is damaged or defective.

12. Paint all scratched or bare metal surfaces. Paint is available from your Authorized Service Dealer.

13. Store the machine in a clean, dry garage or storage area. Remove the key from the ignition switch and keep it in a memorable place. Cover the machine to protect it and keep it clean.

Troubleshooting

PROBLEM	POSSIBLE CAUSES	CORRECTIVE ACTION
Starter does not crank	1. Blade control (PTO) is ENGAGED. 2. Parking brake is not on. 3. Operator is not seated. 4. Battery is dead. 5. Electrical connections are corroded or loose. 6. Fuse is blown. 7. Relay or switch is defective.	1. Move blade control (PTO) to DISENGAGED. 2. Set parking brake. 3. Sit on the seat. 4. Charge the battery. 5. Check electrical connections for good contact. 6. Replace fuse. 7. Contact Authorized Service Dealer.
Engine will not start, starts hard, or fails to keep running.	1. Fuel tank is empty. 2. Choke is not ON. 3. Air cleaner is dirty. 4. Spark plug wire is loose or disconnected. 5. Spark plug is pitted, fouled, or gap is incorrect. 6. Dirt in fuel filter. 7. Dirt, water, or stale fuel is in fuel system.	1. Fill fuel tank with gasoline. 2. Move choke lever to ON. 3. Clean or replace air cleaner element. 4. Install wire on spark plug. 5. Install new, correctly gapped spark plug. 6. Replace fuel filter. 7. Contact Authorized Service Dealer.
Engine loses power.	1. Engine load is excessive. 2. Air cleaner is dirty. 3. Oil level in crankcase is low. 4. Cooling fins and air passages under engine blower housing are plugged. 5. Spark plug is pitted, fouled, or gap is incorrect. 6. Vent hole in fuel cap is plugged. 7. Dirt in fuel filter. 8. Dirt, water, or stale fuel is in fuel system.	1. Reduce ground speed. 2. Clean air cleaner element. 3. Add oil to crankcase. 4. Remove obstruction from cooling fins and air passages. 5. Install new, correctly gapped spark plug. 6. Clean or replace the fuel cap. 7. Replace fuel filter. 8. Contact Authorized Service Dealer.

PROBLEM	POSSIBLE CAUSES	CORRECTIVE ACTION
Engine overheats.	1. Engine load is excessive. 2. Oil level in crankcase is low. 3. Cooling fins and air passages under engine blower housing are plugged.	1. Reduce ground speed. 2. Add oil to crankcase. 3. Remove obstruction from cooling fins and air passages.
Abnormal vibration.	1. Engine mounting bolts are loose. 2. Loose engine pulley, idler pulley, or blade pulley. 3. Engine pulley is damaged.	1. Tighten engine mounting bolts. 2. Tighten the appropriate pulley. 3. Contact Authorized Service Dealer.
Machine does not drive.	1. Traction belt is worn, loose or broken. 2. Traction belt is off pulley.	1. Contact Authorized Service Dealer. 2. Contact Authorized Service Dealer.

Gas Powered
Consumer
Products
Except WPM

THE TORO TOTAL COVERAGE GUARANTEE

A Full Two–Year Warranty
(Limited Warranty for Commercial Use)

What Is Covered By This Express Warranty?

The Toro Company promises to repair any TORO Product used for normal residential purposes* if defective in materials or workmanship for a period of two years from the date of purchase. The cost of parts and labor is included, but the customer pays the transportation costs.

Transportation within a 15 mile radius of the servicing dealer is covered under this warranty for two–stage snowthrowers, walk behind debris equipment and all TORO Wheel Horse riding products. Single stage snowthrowers, and other products not specifically covered, are excluded from the transportation coverage provided by this warranty.

What Products Are Covered By This Warranty?

This warranty applies to all gasoline powered consumer products except walk power mowers. ProLine riding products, wide area walk behind mowers and 18" and 21" mowers are covered by separate warranty statements.

How About Commercial Use?

TORO Consumer Products used for commercial, institutional or rental use are covered by a limited warranty for the following time periods from the date of purchase:

Products	Warranty Period
• 300, 400 and 500 Series Lawn and Garden Tractors	
Chassis	1 year limited warranty
Engine	2 year limited warranty
• 260 Series Lawn and Garden Tractors, XL Lawn Tractors, Rear Engine Riders, Straight Shaft Trimmers, and Backpack Blowers	90 day limited warranty
• All Others	45 day limited warranty

How Do You Get Warranty Service?

Should you feel your TORO Product contains a defect in material or workmanship, contact the dealer who sold you the product or any Authorized TORO Service Dealer or TORO Master Service Dealer. The Yellow Pages of your telephone directory is a good reference source. The dealer will either arrange service at his/her dealership or recommend another Authorized Service Dealer who may be more convenient. You may need proof of purchase (copy of registration card, sales receipt, etc.) for warranty validation.

If for any reason you are dissatisfied with the Service Dealer's analysis of the defect in materials or workmanship or if you need a referral to a TORO Service Dealer, please feel free to contact us at the following address:

Toro Customer Service Department
8111 Lyndale Avenue South
Bloomington, MN 55420–1196
612–888–8801
800–348–2424

What Must You Do To Keep The Warranty In Effect?

You must maintain your TORO Product by following the maintenance procedures described in the operator's manual. Such routine maintenance, whether performed by a dealer or by you, is at your expense.

What Does This Warranty Not Cover? and How Does Your State Law Relate To This Warranty?

There is no other express warranty except the TORO Starting Guarantee on GTS Engines. This express warranty does not cover:

- Cost of regular maintenance service or parts, such as filters, fuel, lubricants, tune–up parts, blade sharpening, brake and clutch adjustments.

- Any product or part which has been altered or misused or required replacement or repair due to normal wear, accidents, or lack of proper maintenance.

- Repairs necessary due to improper fuel, contaminants in the fuel system, or failure to properly prepare the fuel system prior to any period of non–use over three months.

- Pickup and delivery charges for distances beyond a 15 mile radius from an Authorized TORO Service Dealer (covered products only).

All repairs covered by this warranty must be performed by an Authorized TORO Service Dealer using Toro approved replacement parts.

Repair by an Authorized TORO Service Dealer is your sole remedy under this warranty.

The Toro Company is not liable for indirect, incidental or consequential damages in connection with the use of the TORO Products covered by this warranty, including any cost or expense of providing substitute equipment or service during reasonable periods of malfunction or non–use pending completion of repairs under this warranty. Some states do not allow exclusions of incidental or consequential damages, so the above exclusion may not apply to you.

This warranty gives you specific legal rights, and you may also have other rights which vary from state to state.

* Normal residential purposes means mowing the lawn on the same lot as your home. Use at more than one location is considered commercial use and the commercial use warranty would apply.

COUNTRIES OTHER THAN THE UNITED STATES OR CANADA

Customers who have purchased TORO Products exported from the United States or Canada should contact their TORO Distributor (Dealer) to obtain guarantee policies for your country, province, or state. If for any reason you are dissatisfied with your Distributor's service or have difficulty obtaining guarantee information, contact the TORO importer. If all other remedies fail, you may contact us at The Toro Company.