Form No. 3370-983 Rev B

TORO®

Count on it.

Parts Catalog

Z Master® Riding Mower

with 48in TURBO FORCE® Side Discharge Mower

Model No. 74902TE—Serial No. 312000001 and Up

Register at www.Toro.com.
Original Instructions (EN)

3370-983 B

Ordering Replacement Parts

To order replacement parts, please supply the part number, the quantity, and the description of each part desired.

Understanding Reference Numbers

Each identified part in an illustration has a reference number. The reference number for a part also appears in the parts list, along with other information about the part.

This catalog uses two special reference number formats, one to indicate parts in a service assembly and another to indicate the quantity of a given part in an illustration.

Service Assembly Reference Numbers

Parts in service assemblies have reference numbers in the form a:b. The a represents the reference number of the entire service assembly and the b represents a sequential number unique to each part within the service assembly.

For example, a wheel assembly might be identified by reference number 6, the tire by 6:1, the valve by 6:2, and the wheel by 6:3. When you order the assembly identified by reference number 6, you receive all parts identified by reference numbers 6:1,6:2, and 6:3. However, you may also order any part individually. Reference numbers of this type appear in illustration and in parts lists.

Reference Numbers Indicating Quantity

In an illustration, if a reference number indicates more than one part, the reference number has the form nX y. The n represents the quantity of the part, the X is the multiplication symbol, and the y represents the reference number.

For example, in an illustration, the reference number 2X 37 means that two of the parts identified by reference number 37 are indicated.

Contents

Frame, Caster and Z Stand Assembly 4
Roll-Over Protection System Assembly No. 116-0232 6
Caster Wheel and Fork Assembly 7
Z Stand Assembly 8
Hydraulic Pump, Idler and Belt Assembly 9
Pump Idler Assembly No. 116-1255 10
LH Hydro Assembly No. 116-6411 11
RH Hydro Assembly No. 116-6412 12
Rear Wheel and Park Brake Assembly 13
Parking Brake Handle Assembly No. 116-6861 14
Fuel Tank Mounting Assembly 15
Fuel Tank Assembly No. 116-3979 16
Seat Mounting Assembly 17
Seat Assembly No. 116-0035 18
Motion Control Assembly 19
Fender, Console and Control Assembly 20
LH Console Assembly No. 115-7403 21
RH Console Assembly No. 115-7402 22
Electrical Assembly 23
Deck Lift Assembly 24
Height-of-Cut Assembly No. 117-3842 26
Engine, Muffler and Clutch Assembly 27
Deck Assembly 28
Deck Decal Assembly No. 119-6656 30
Idler Assembly 31
Spindle Assembly No. 119-8560 32
Rubber Deflector Assembly No. 108-2792 33
Lever Assembly No. 107-1664 34
Attachments and Accessories 35

© 2020—The Toro® Company
8111 Lyndale Avenue South
Bloomington, MN 55420

Contact us at www.Toro.com.
Printed in the USA.
All Rights Reserved

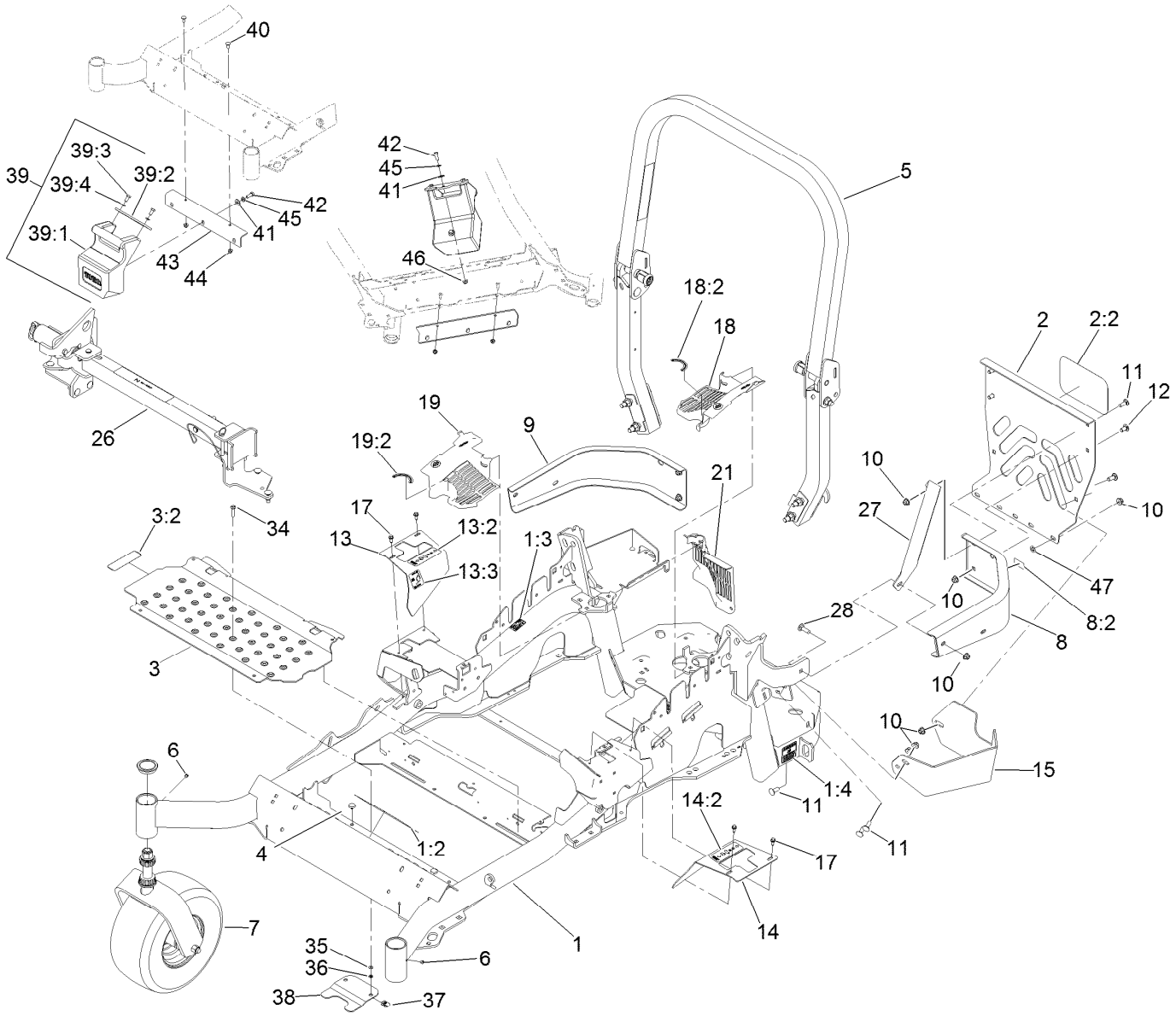

Frame, Caster and Z Stand Assembly

Ref.	Part Number	Qty.	Description
1	116-6368	1	Main Frame ASM
1:2	117-3888	1	Decal-Danger Slope W/ROPS
1:3	106-5517	2	Decal-Warning
1:4	106-2655	2	Decal-Hazard, Pinched Finger
2	115-7410	1	Rear Guard ASM
2:2	67-7320	1	Decal
3	117-0915	1	Floorpan ASM
3:2	112-9028	1	Decal-Cover, Missing
4	1-513658	2	Bumper
5	116-0232	1	ROPS ASM
6	1-811010	2	Plug
7		2	Front Caster ASM ●
8	117-3829	1	LH Rear Bumper ASM
8:2	106-5517	1	Decal-Warning
9	116-0057-03	1	Bumper-RH
10	104-8301	11	Nut-HF, NI
11	3231-22	7	Screw-CARR
12	3231-21	3	Screw-CARR
13	116-5898	1	RH Motion Control Cover ASM
13:2	99-8936	1	Decal-Control, Motion
13:3	116-5988	1	Decal-Park Brake, CE
14	117-3831	1	LH Motion Control Cover ASM
14:2	99-8936	1	Decal-Control, Motion
15	117-0908-03	1	Guard-Muffler
17	32144-10	4	Screw-HWH
18	117-3838	1	LH Hydro Guard ASM
18:2	117-3811	1	Decal-Hydro Oil
19	117-3839	1	RH Hydro Guard ASM
19:2	117-3811	1	Decal-Hydro Oil
21	109-9058	1	Guard-Hydro, Rear (RH)
26		1	Z Stand ASM ●
27	117-0903-03	1	Strap

● Not serviced separately

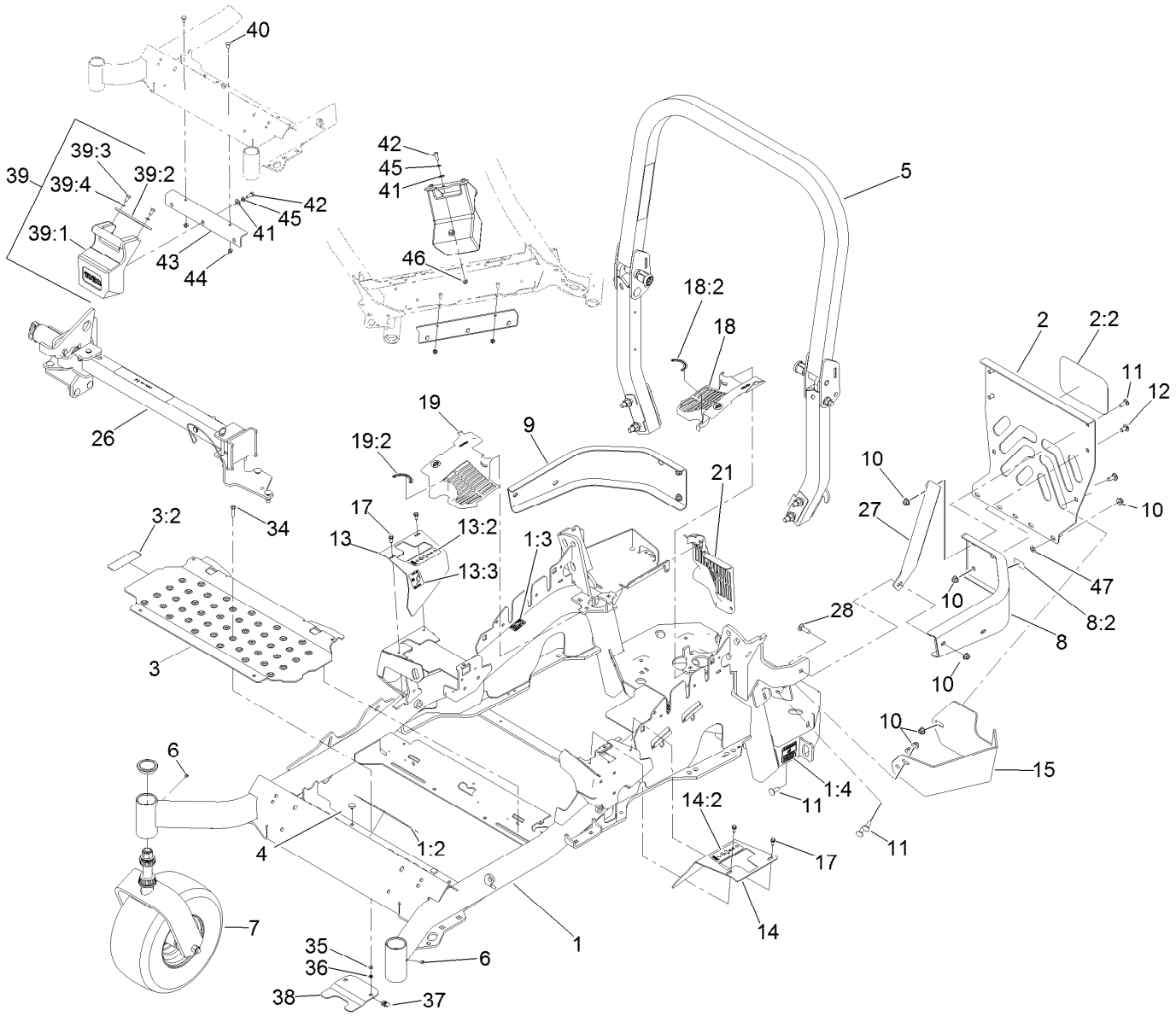

Frame, Caster and Z Stand Assembly (continued)

Ref.	Part Number	Qty.	Description
28	3231-25	1	Bolt-CARR
34	3234-21	2	Screw-HHF
35	3256-60	2	Washer-Flat
36	106-8737	2	Nut-Retainer
37	107069	2	Clip
38	119-0395-03	1	Adapter-Captive
39		1	Weight ASM ●
39:1	120-7881	1	Weight-43 Lb
39:2	115-3616-01	1	Tab-Support, Weight
39:3	323-4	2	Screw-HH

Ref.	Part Number	Qty.	Description
39:4	3253-5	2	Washer-Lock
40	3230-23	2	Screw-CARR
41	3256-4	2	Washer-Flat
42	323-6	2	Screw-HH
43	115-3615-01	1	Bracket-Mount, Weight
44	104-8300	2	Nut-HF, NI
45	3253-5	2	Washer-Lock
46	104-8301	1	Nut-HF, NI
47	107-3154	2	Nut-Push

● Not serviced separately

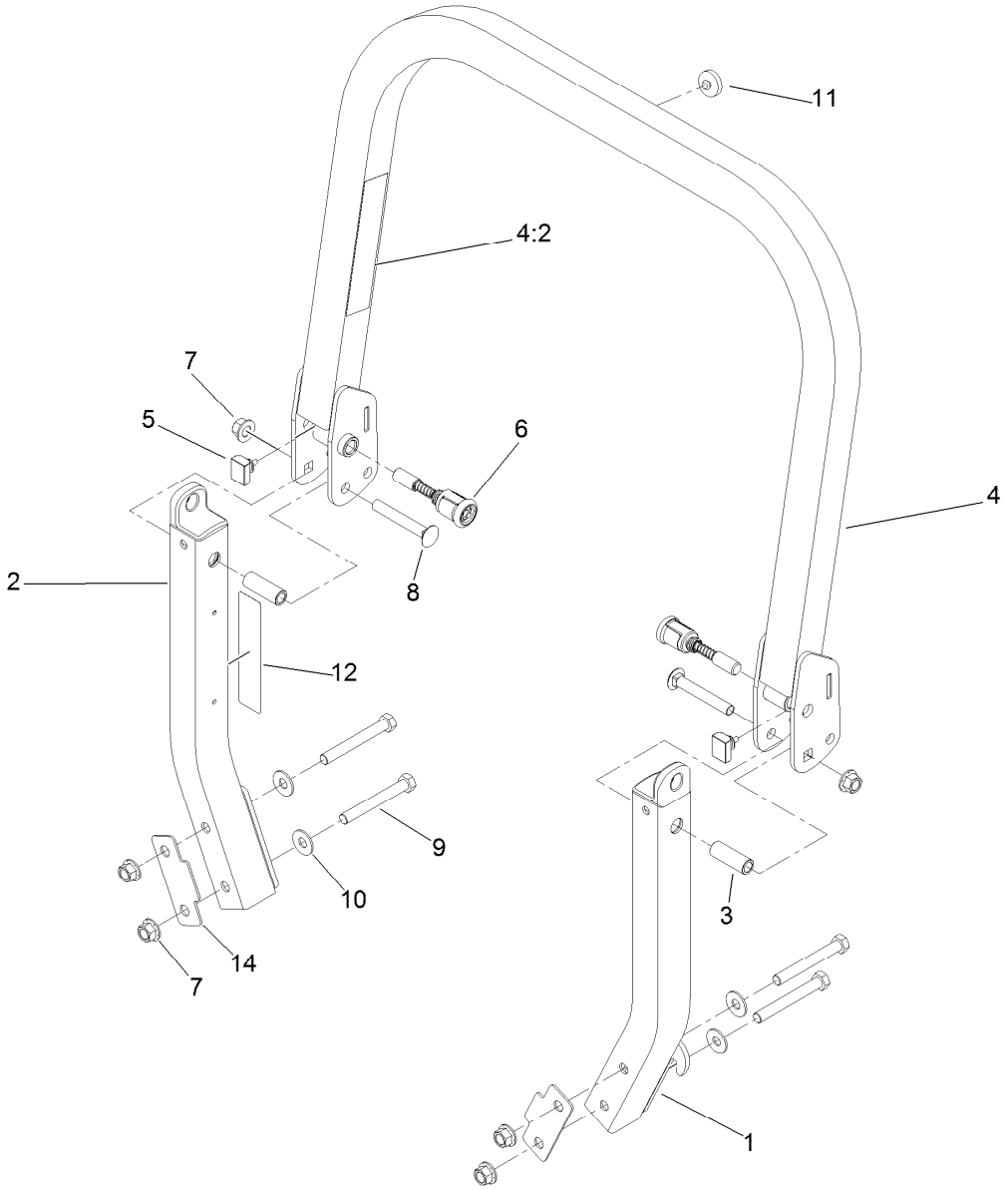

Roll-Over Protection System Assembly No. 116-0232

Ref.	Part Number	Qty.	Description
1		1	Leg-ROPS, LH ●
2		1	Leg-ROPS, RH ●
3	109-6653	2	Spacer
4		1	Upper ROPS ASM ●
4:2	107-3069	1	Decal-Warning
5	109-5337	2	Bumper-ROPS
6	116-0104	2	Pin-Spring
7	99-5107	6	Nut-Lock
8	3233-10	2	Screw-CARR
9	325-17	4	Screw-HH
10	109-9505	4	Washer-Spring
11	109-9233	1	Bumper-Push-In, Rubber
12	117-0346	1	Decal-Caution, Fuel Vent
14	116-0960	2	Spacer

● Not serviced separately

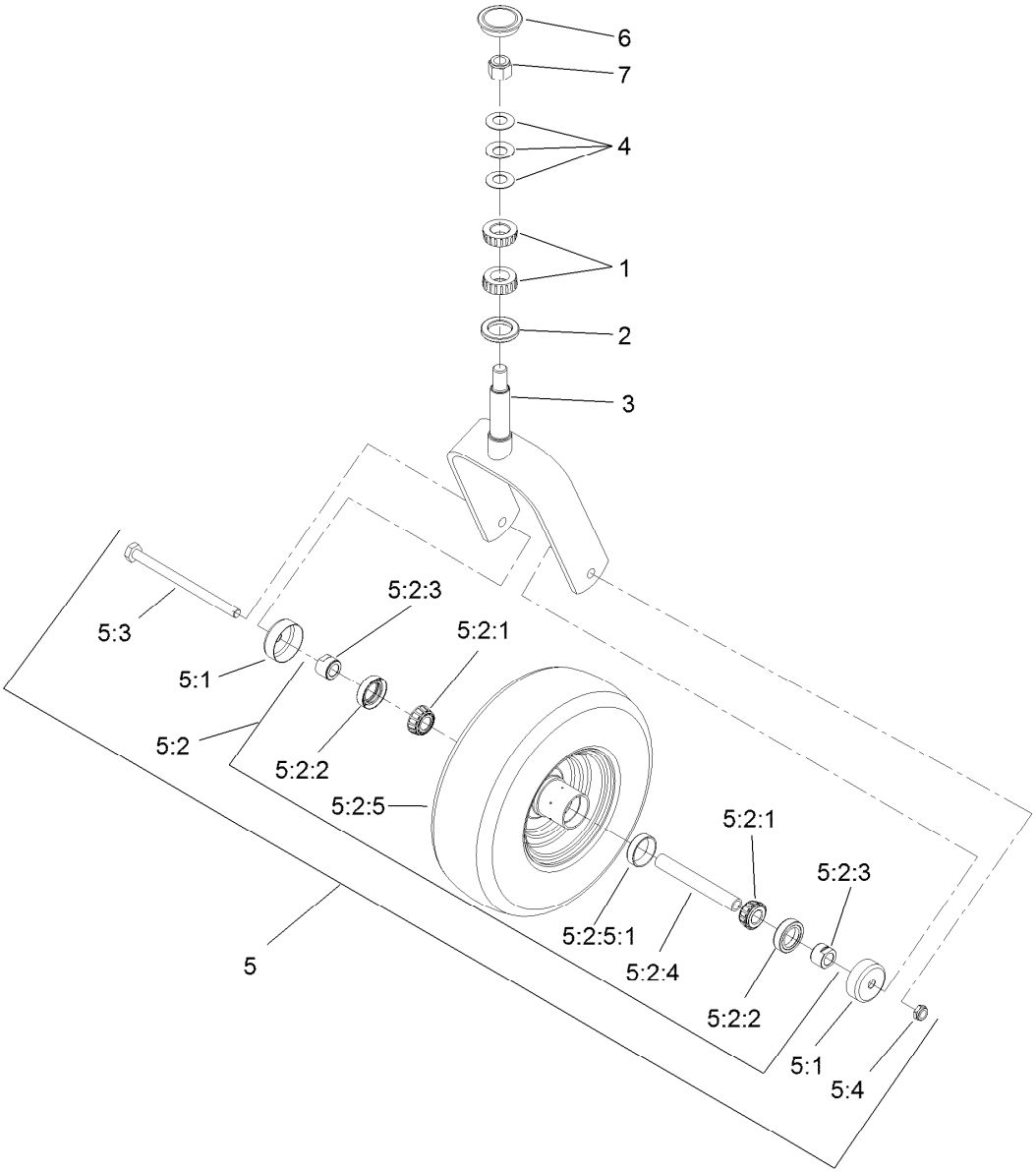

Caster Wheel and Fork Assembly

Ref.	Part Number	Qty.	Description
1	1-543509	2	Bearing-Roller, Tapered
2	1-543511	1	Seal-Grease
3	109-9422-01	1	Fork-Caster
4	1-633508	3	Washer-Bellville
5	109-9126	1	Wheel & Tire ASM
5:1	103-2768	2	Guard-Seal
5:2		1	Wheel And Tire ASM ●
5:2:1	1-633585	2	Bearing-Cone, Taper
5:2:2	103-0063	2	Seal-Caster

Ref.	Part Number	Qty.	Description
5:2:3	103-3051	2	Spacer-Nut ■
5:2:4	103-3155	1	Axle-Caster
5:2:5		1	Wheel And Tire ASM ●
5:2:5:1	1-633584	1	Bearing-Cup
5:3	325-42	1	Screw-HH
5:4	3296-23	1	Nut-Lock, NI
6	103-4882	1	Cap-Grease
7	3296-51	1	Nut-Lock, NI

● Not serviced separately
■ Use Pro-Lock, Nut Type (P/N 1-840022, .5ml tube) on threads.

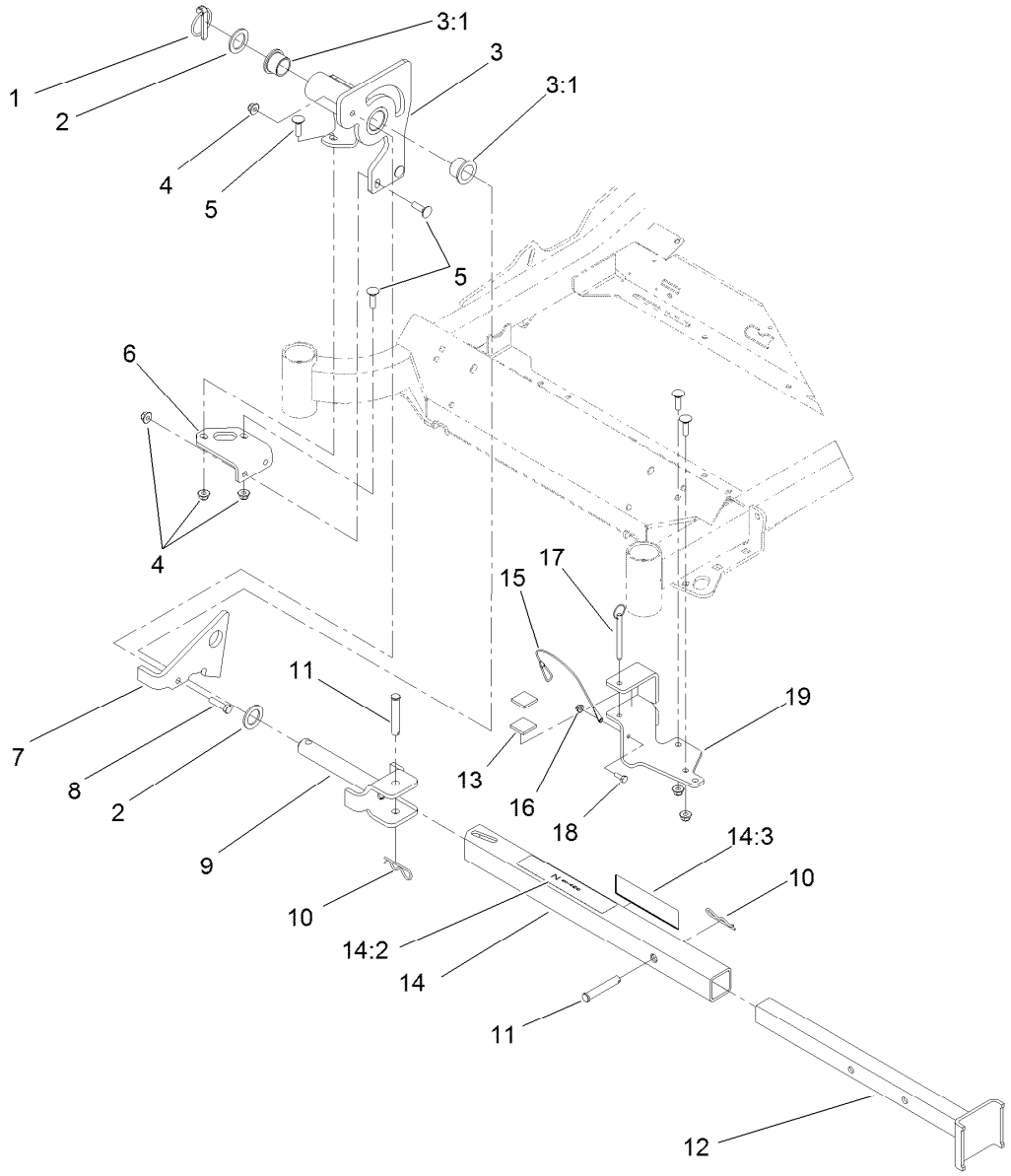

Z Stand Assembly

Ref.	Part Number	Qty.	Description
1	283-71	1	Pin-Lynch
2	3-6781	2	Washer-Thrust
3	115-3635	1	Z Stand Pivot ASM
3:1	94-1291	2	Bushing
4	104-8301	8	Nut-HF, NI
5	3231-25	7	Bolt-CARR
6	115-3619-01	1	Bracket-Mount, Pivot
7	100-9686-01	1	Bracket-Latch
8	323-8	1	Screw-HH
9	100-9692-01	1	Pin-Pivot
10	3290-355	2	Pin-Hair

Ref.	Part Number	Qty.	Description
11	283-55	2	Pin-Clevis
12	115-3631-01	1	Tube-Inner
13	115-3613	2	Cushion-Rubber
14	115-3634	1	Outer Tube ASM
14:2	106-7464	1	Decal-Z Stand
14:3	107-3969	1	Decal-Warning
15	100-9385	1	Lanyard-Nylon
16	104-7201	1	Nut-HF
17	105-1647	1	Pin-Hitch, Cotterless
18	321-4	1	Screw-HH
19	115-3625-01	1	Cradle-Z Stand

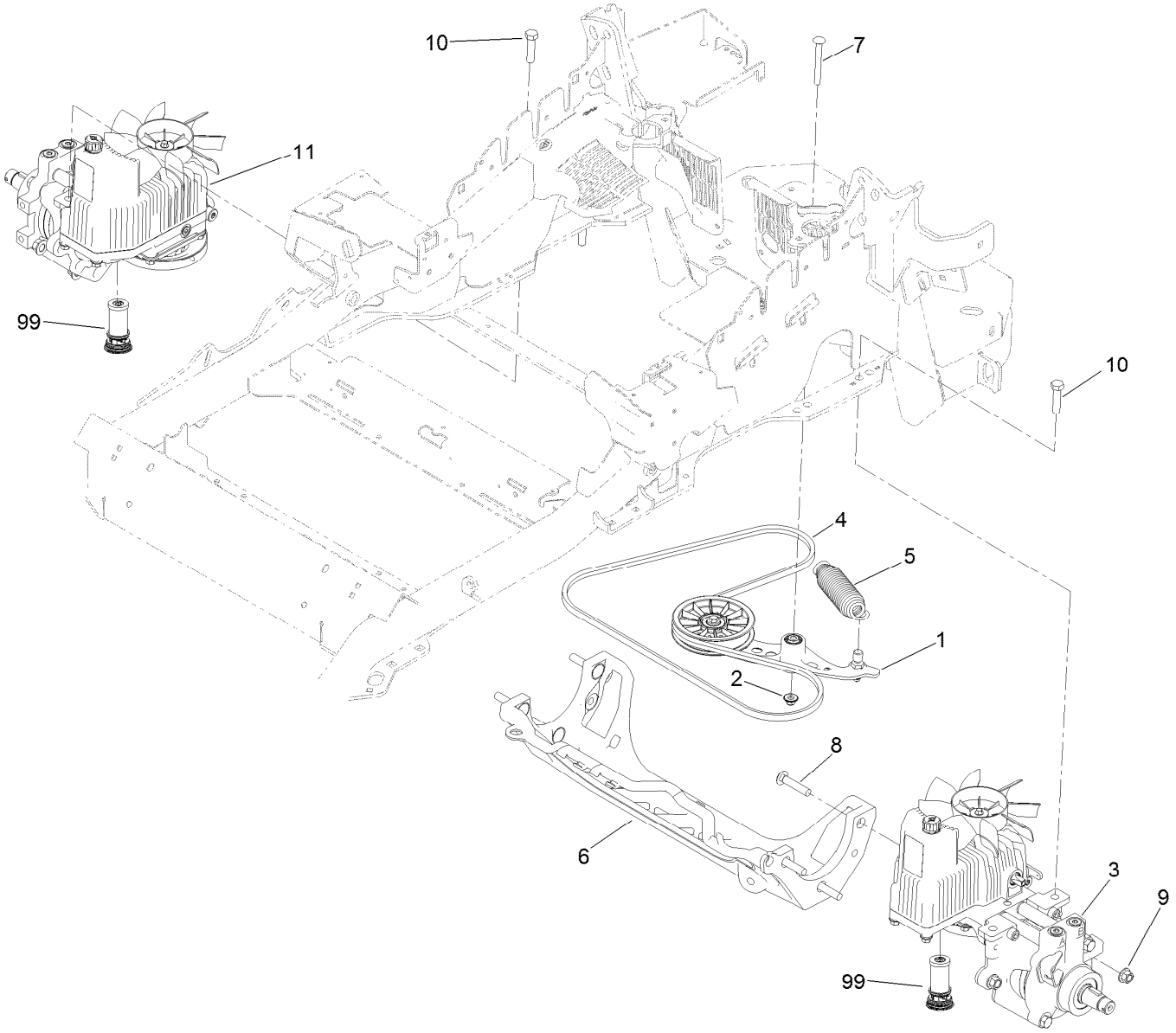

Hydraulic Pump, Idler and Belt Assembly

Ref.	*Part Number*	*Qty.*	*Description*
1	116-1255	1	Pump Idler ASM
2	109-6658	1	Nut-Flange, NI
3	116-6411	1	LH Hydro ASM (12Cc W/Check)
4	109-3388	1	Belt
5	116-0133	1	Extension-Spring
6	109-9375	1	Cradle-Hydro
7	116-1502	1	Bolt-Shoulder, Carriage
8	3233-34	6	Screw-CARR
9	99-5107	6	Nut-Lock
10	325-8	4	Screw-HH
11	116-6412	1	RH Hydro ASM (12Cc W/Check)
99	114-4713	1	Hypr-Oil 500 (Quart) ●
99	114-4714	1	Hypr-Oil 500 (Gallon) ●
99	114-4715	1	Hypr-Oil 500-5 (5 Gallon) ●
99	117-0390	1	Filter-Hydro

● Not illustrated

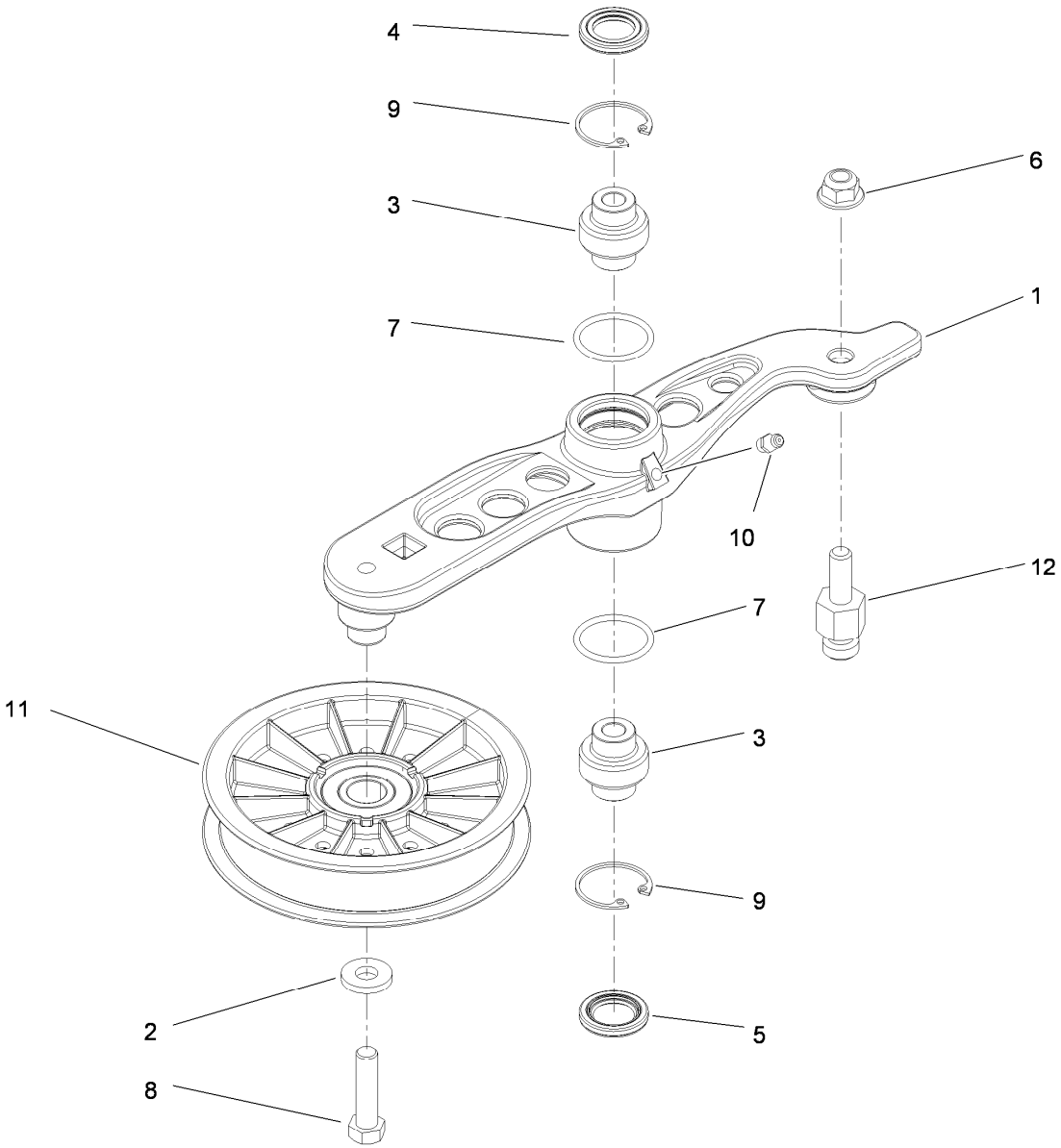

Pump Idler Assembly No. 116-1255

Ref.	Part Number	Qty.	Description
1		1	Arm-Pump, Idler ●
2	43-0940	1	Spacer
3	103-3504	2	Bearing-Spherical
4	103-3505	1	Seal-Lip, Double
5	103-3506	1	Seal-Lip, Single
6	109-6658	1	Nut-Flange, NI
7	106-7159	2	O-Ring
8	323-8	1	Screw-HH
9	32120-10	2	Ring-Snap
10	302-19	1	Fitting-Grease
11	109-8076	1	Pulley-Idler
12	116-3467	1	Pin-Spring, Anchor

● Not serviced separately

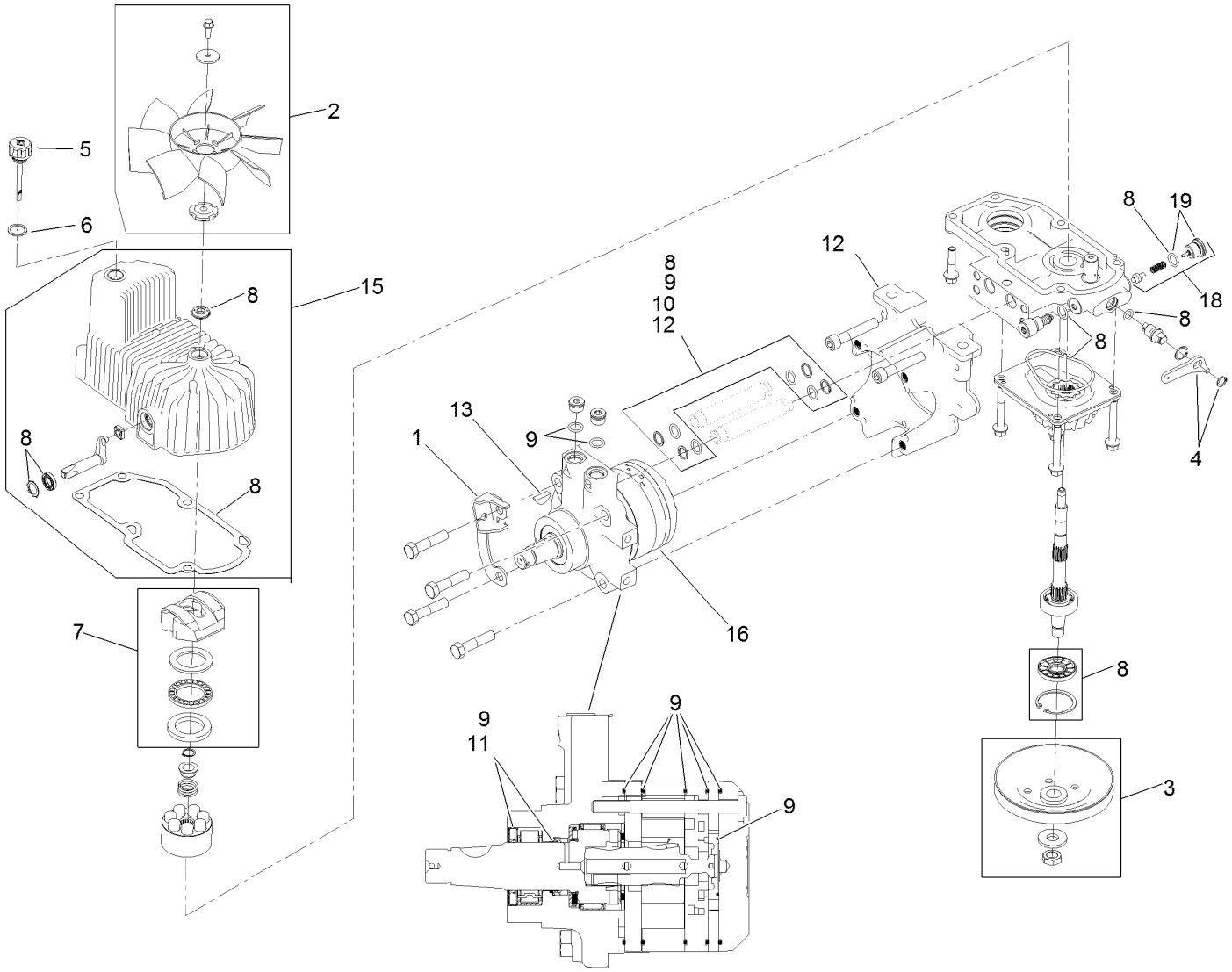

LH Hydro Assembly No. 116-6411

Ref.	Part Number	Qty.	Description
1	116-6859	1	Bracket-Anchor, Cable
2	116-0233	1	Fan Kit
3	116-0234	1	Pulley Kit
4	116-0235	1	Handle
5	116-0236	1	Dipstick
6	116-0237	1	Gasket
7	116-1367	1	Swash Block Kit
8	116-1368	1	Pump Seal Kit
9	116-1369	1	Motor Seal Kit
10	116-1370	1	Tube Seal Kit
11	116-1371	1	Output Shaft Seal Kit
12	116-5469	1	Cup-Nose
13	3257-42	1	Key-Woodruff
15	116-3287	1	Housing-Hydro, LH
16	116-2985	1	HYD Motor, 240Cc LH Unsealed
18	116-1630	1	Check Valve ASM
19	116-1631	1	Plug-Check (W/O-Ring)
99	116-1373	1	Flow Test Kit ●

● Not illustrated

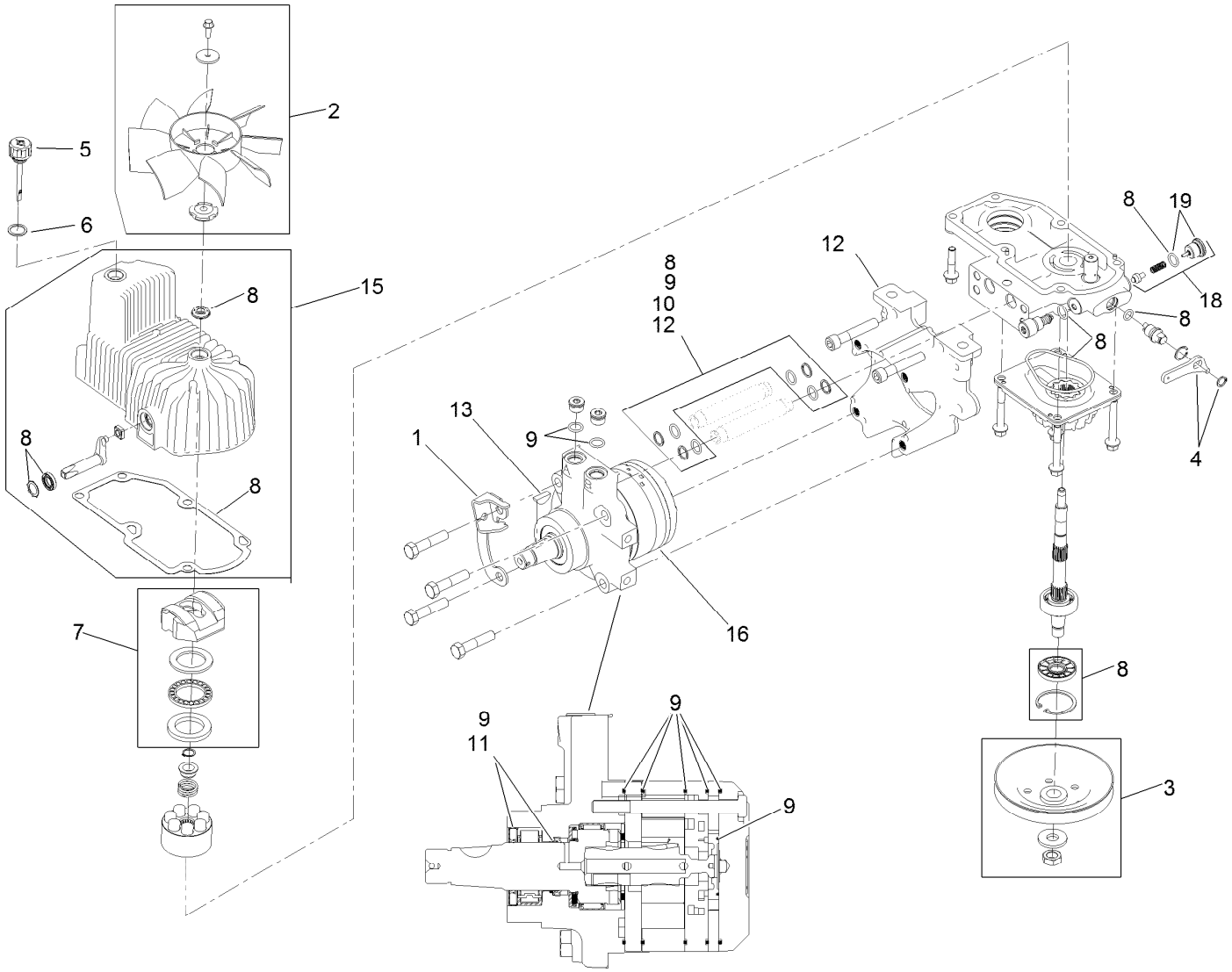

RH Hydro Assembly No. 116-6412

Ref.	Part Number	Qty.	Description
1	116-6859	1	Bracket-Anchor, Cable
2	116-0233	1	Fan Kit
3	116-0234	1	Pulley Kit
4	116-0235	1	Handle
5	116-0236	1	Dipstick
6	116-0237	1	Gasket
7	116-1367	1	Swash Block Kit
8	116-1368	1	Pump Seal Kit
9	116-1369	1	Motor Seal Kit
10	116-1370	1	Tube Seal Kit
11	116-1371	1	Output Shaft Seal Kit
12	116-5469	1	Cup-Nose
13	3257-42	1	Key-Woodruff
15	116-3288	1	Housing-Hydro, RH
16	116-2984	1	Motor-HYD, 240Cc RH, Unsealed
18	116-1630	1	Check Valve ASM
19	116-1631	1	Plug-Check (W/O-Ring)
99	116-1373	1	Flow Test Kit ●

● Not illustrated

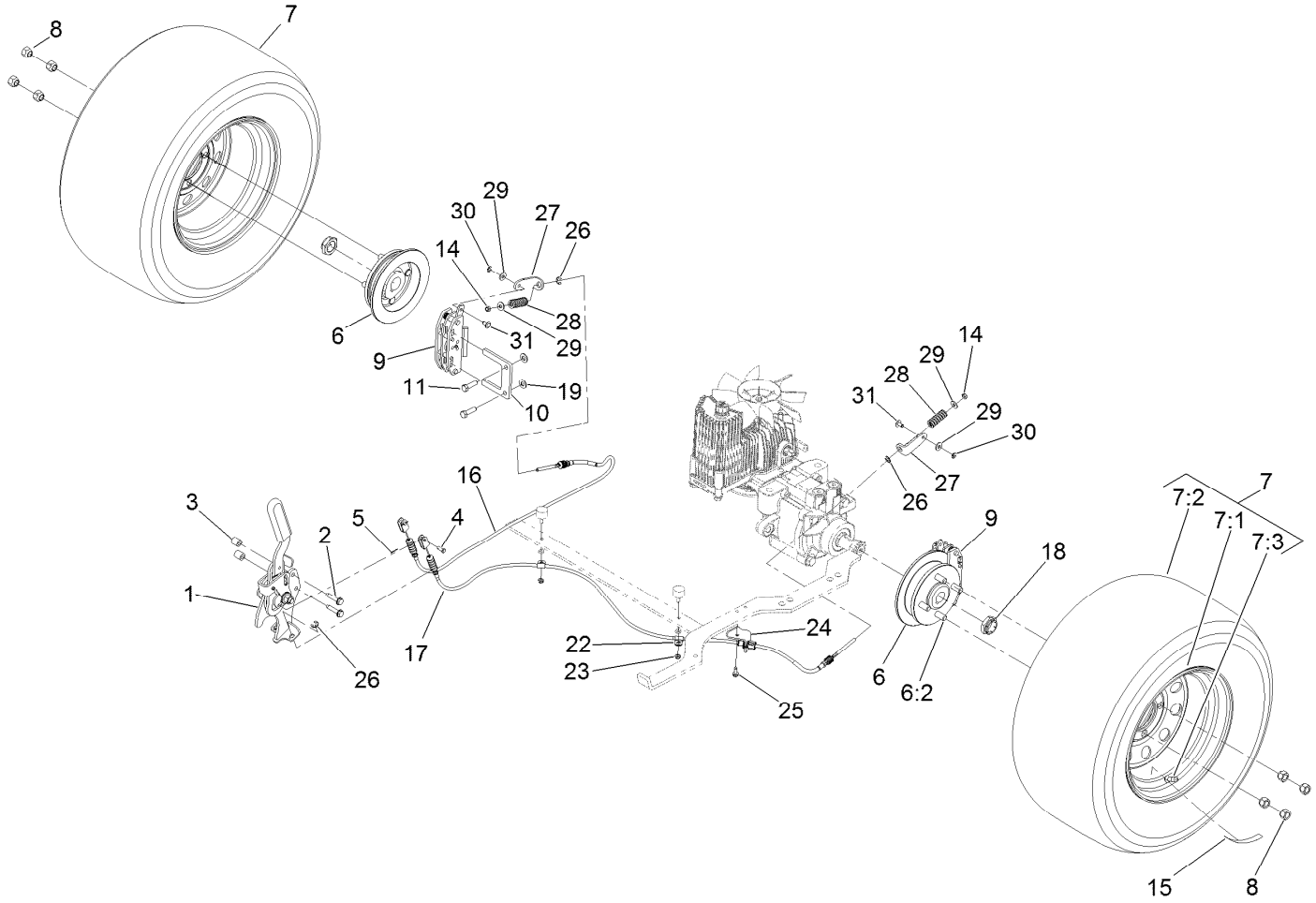

Rear Wheel and Park Brake Assembly

Ref.	Part Number	Qty.	Description
1	116-6861	1	Brake Handle ASM
2	32144-57	2	Screw
3	82-6840	2	Spacer
4	60-1730	2	Pin-Clevis
5	3272-1	2	Pin-Cotter
6	116-1746	2	Wheel Hub ASM
6:2	116-1696	4	Stud-Wheel
7	109-3050	2	Wheel And Tire ASM
7:1	109-3645	1	Rim ASM
7:2	103-2771	1	Tire
7:3	232-27	1	Stem-Valve
8	242-50	8	Nut-Lug
9	109-2889	2	Caliper-Brake
10	109-0958	2	Plate-Mount, Brake
11	92-5727	4	Screw-Lock, Patch
14	3296-13	2	Nut-Lock, NI

Ref.	Part Number	Qty.	Description
15	117-3863	2	Decal-Wheel Hub, CE
16	116-6364	1	Cable-Park Brake, RH
17	116-6365	1	Cable-Park Brake, LH
18	116-1399	2	Locknut
19	3256-24	4	Washer-Flat
22	88-7970	2	Clip
23	3296-56	2	Nut-Lock, NI
24	116-6397	1	Bracket-Cable
25	32144-10	1	Screw-HWH
26	32120-18	4	E-Ring
27	116-6182	2	Bracket-Brake, L
28	116-6347	2	Spring-Die
29	3256-22	4	Washer-Flat
30	32151-86	2	E-Ring
31	116-6348	2	Pin-Brake

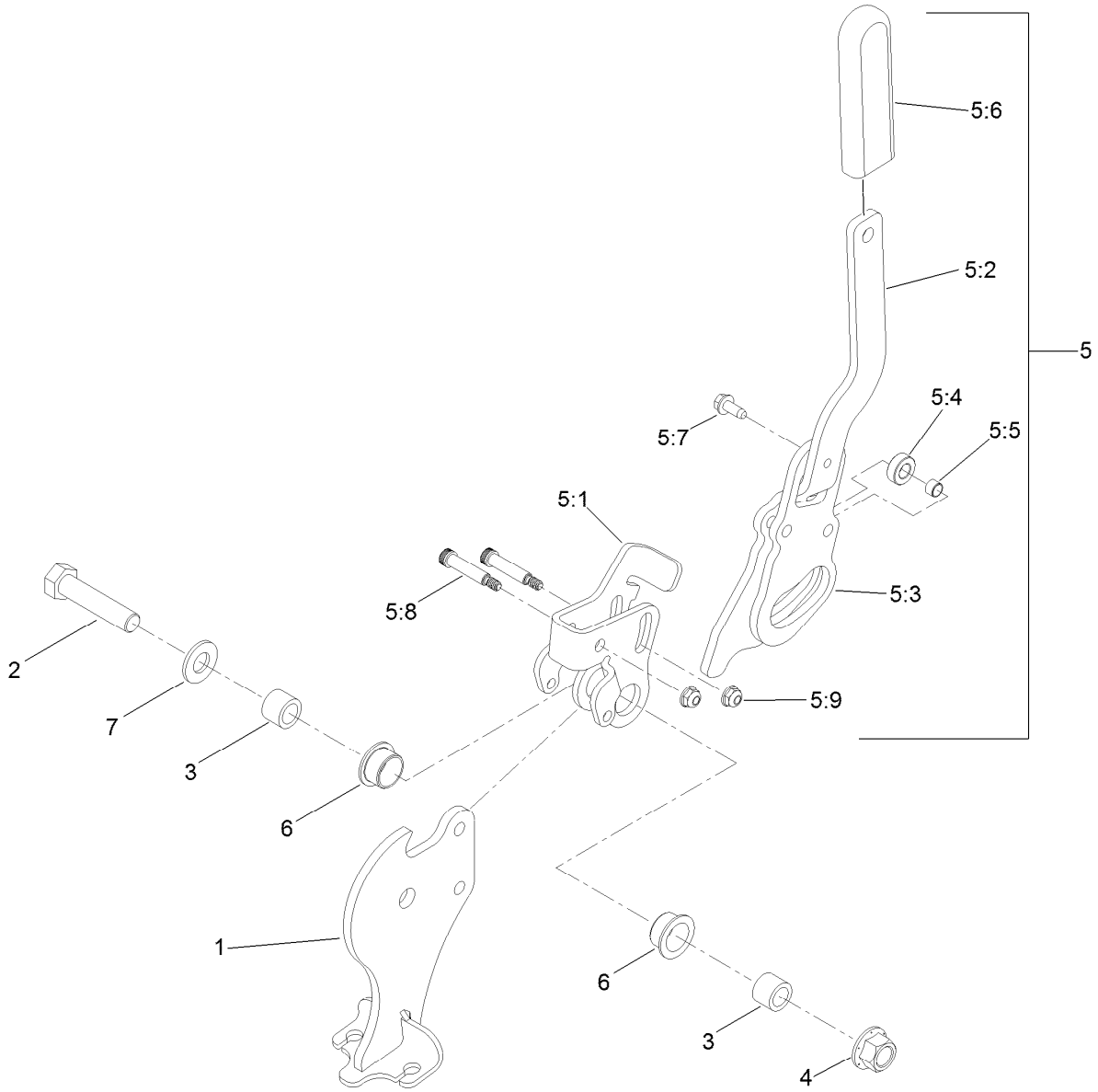

Parking Brake Handle Assembly No. 116-6861

Ref.	Part Number	Qty.	Description
1	116-6855	1	Brake Pivot ASM
2	325-9	1	Screw-HH
3	116-5384	2	Spacer
4	99-5107	1	Nut-Lock
5	116-6860	1	Handle ASM
5:1	116-6856	1	Bellcrank-Brake
5:2	116-6857	1	Handle-Brake
5:3	116-6858	1	Plate-Handle

Ref.	Part Number	Qty.	Description
5:4	116-6846	1	Roller-Brake
5:5	116-6852	1	Bearing-Sleeve
5:6	1-633268	1	Grip-Lever
5:7	32144-10	1	Screw-HWH
5:8	116-6876	2	Screw-Shoulder
5:9	104-7201	2	Nut-HF
6	109-8054	2	Bushing-Flange
7	3256-26	1	Washer-Flat

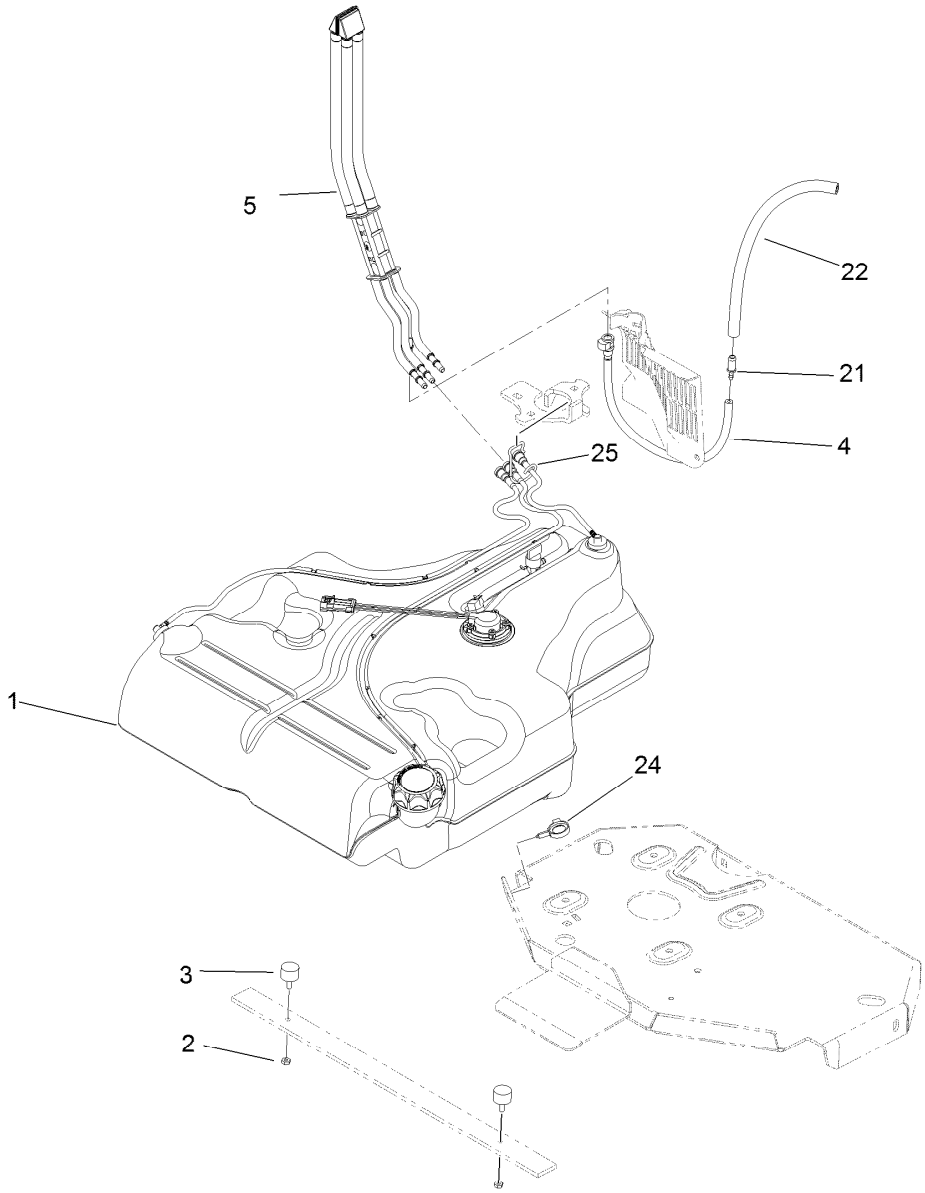

Fuel Tank Mounting Assembly

Ref.	*Part Number*	*Qty.*	*Description*
1	116-3979	1	Fuel Tank ASM
2	3218-1	2	Nut-Jam
3	116-6380	2	Bumper-Rubber (W/ Stud)
4	116-3977	1	Hose ASM
5	109-9491	1	Fuel Manifold Vent ASM
21	98-2952	1	Fitting-Straight
22	116-5087	1	Hose-Fuel
24	105-1853	1	Clamp-Hose
25	116-6005	1	Retainer-Line, Vapor

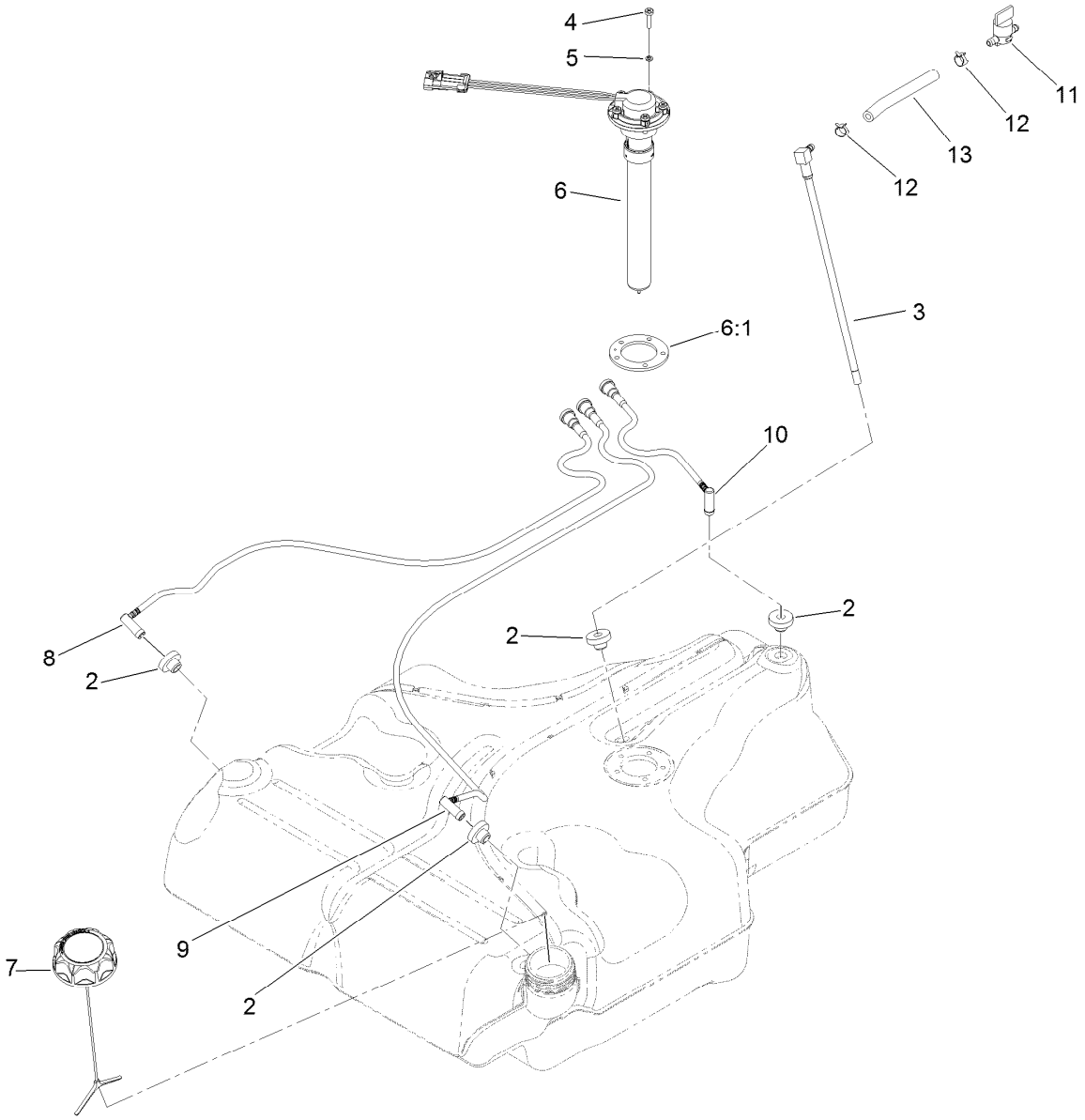

Fuel Tank Assembly No. 116-3979

Ref.	*Part Number*	*Qty.*	*Description*
2	46-6560	4	Bushing
3	116-2459	1	Fuel Line Kit (With Grommet)
4	9107944	5	Screw-Pan
5	3253-17	5	Washer-Lock
6	116-0003	1	Sender-Level, Fuel
6:1	109-9620	1	Gasket-Sender, Fuel
7	116-1704	1	Cap-Fuel, Ratcheting
8	116-2460	1	RH Vent Line Kit (With Grommet)
9	116-2461	1	LH Vent Line Kit (With Grommet)
10	116-2462	1	Rear Vent Line Kit (With Grommet)
11	1-603770	1	Valve-Fuel
12	2412-98	2	Clamp-Hose
13	109-0650	1	Hose-Fuel

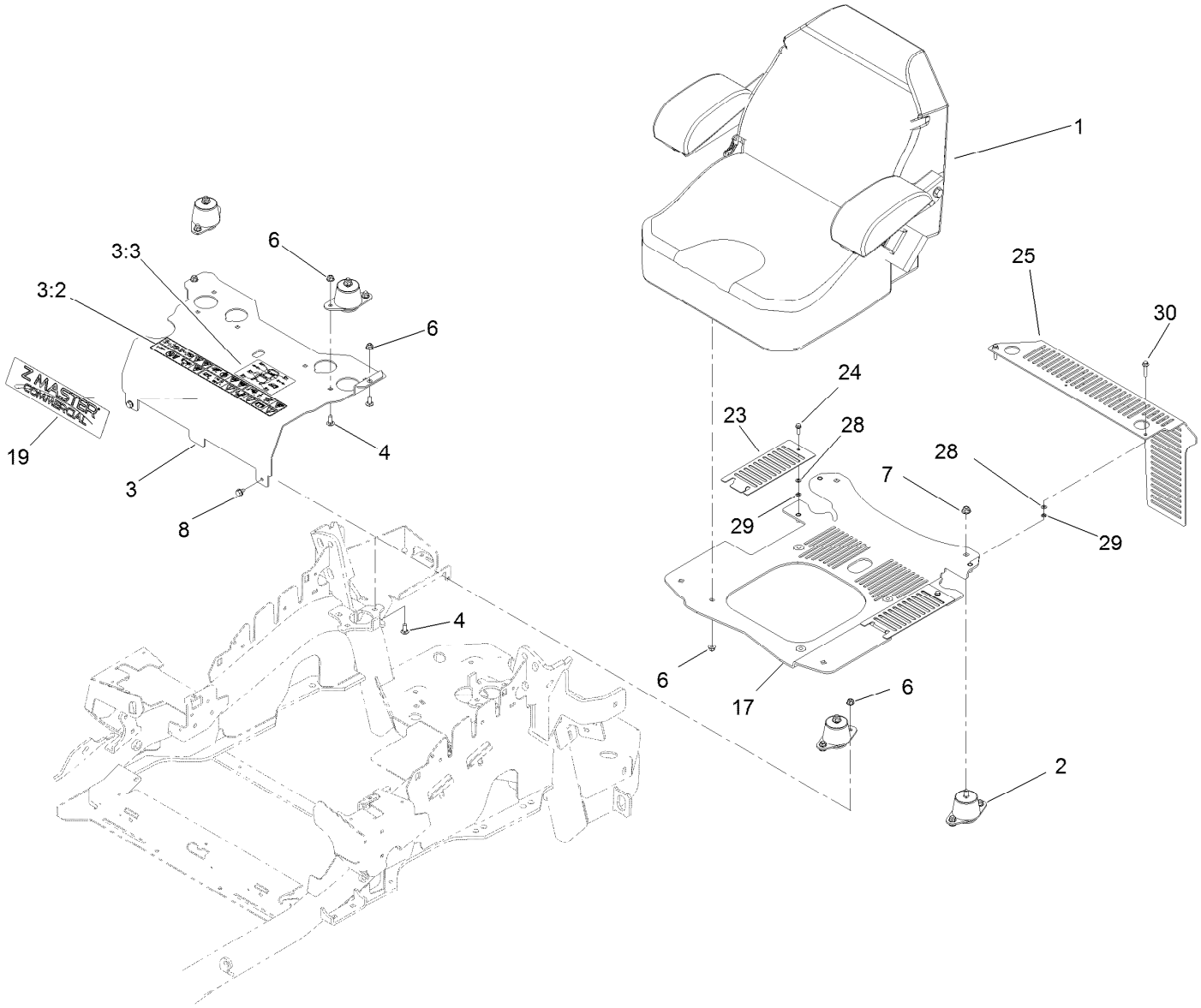

Seat Mounting Assembly

Ref.	Part Number	Qty.	Description
1	116-0035	1	Seat-Standard
2	109-9034	4	Isolator-Seat
3	116-2324	1	Mount-Seat
3:2	114-4468	1	Decal-Console
3:3	114-4465	1	Decal-Service Aid
4	3230-23	10	Screw-CARR
6	104-8300	18	Nut-HF, NI
7	104-8301	4	Nut-HF, NI
8	9266934	2	Screw

Ref.	Part Number	Qty.	Description
17	117-0910	1	Seat Base ASM
19	120-5893	1	Decal
23	117-0901-03	2	Cover
24	32105-15	2	Screw-HWH
25	119-4241-03	1	Guard-CE
28	3256-60	4	Washer-Flat
29	106-8737	4	Nut-Retainer
30	3234-21	2	Screw-HHF

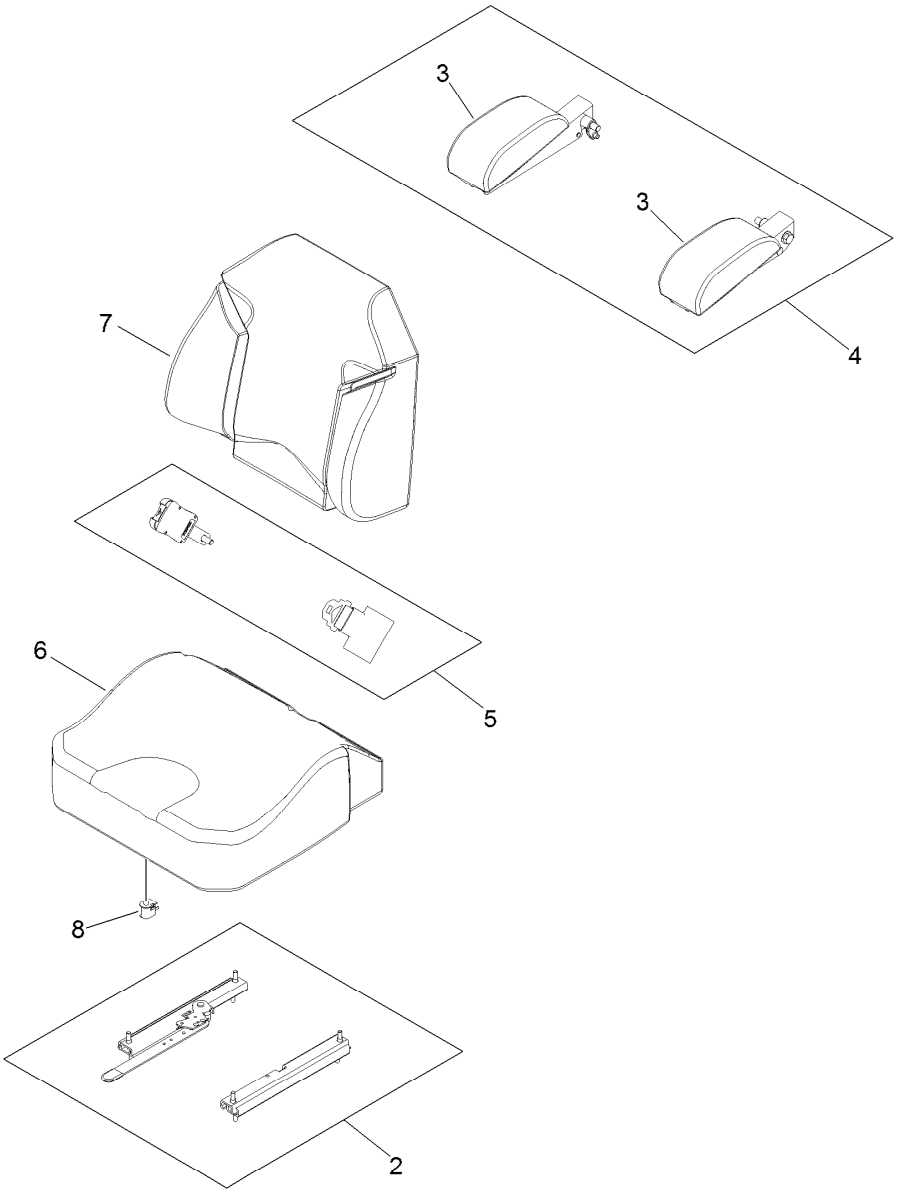

Seat Assembly No. 116-0035

Ref.	Part Number	Qty.	Description
2	109-9801	1	Seat Track Set
3	109-9802	1	Arm Rest Pad Set
4	109-9803	1	Arm Rest Set
5	109-9805	1	Seat Belt Kit
6	109-9806	1	Cover-Cushion
7	109-9808	1	Cover-Back
8	82-2190	1	Switch-Bail

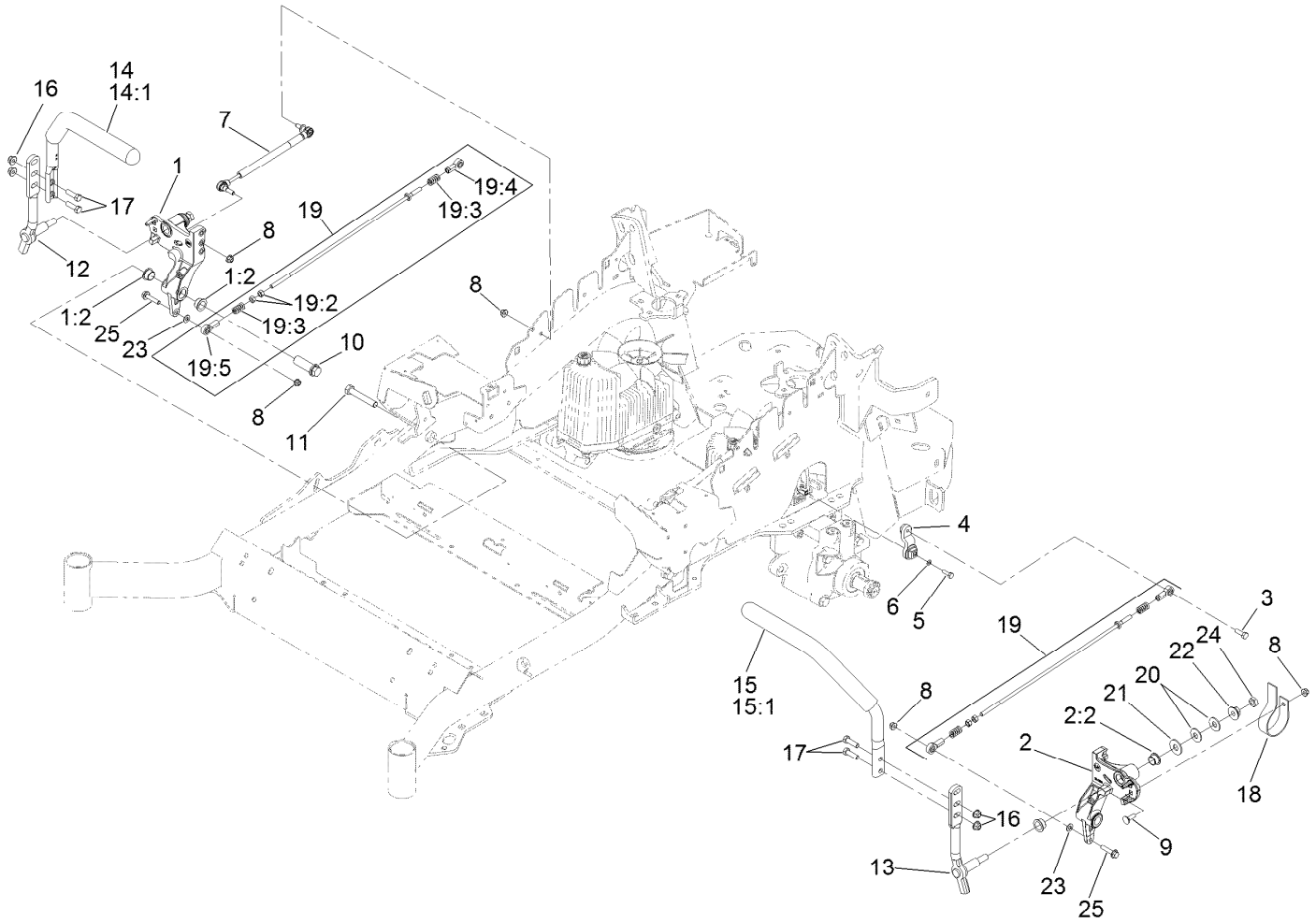

Motion Control Assembly

Ref.	Part Number	Qty.	Description
1	116-0880	1	RH Motion Control And Bushing ASM
1:2	109-8054	4	Bushing-Flange
2	116-0881	1	LH Motion Control And Bushing ASM
2:2	109-8054	4	Bushing-Flange
3	116-0648	2	Screw-HH, Thread Locking ●
4	109-4581	2	Arm-Control, Pump
5	9080046	2	Screw-HH ●
6	1-303435	2	Washer-Spring
7	116-0027	2	Damper-Control, Motion
8	104-8300	8	Nut-HF, NI
9	3230-2	2	Bolt-CARR
10	109-5891	2	Hub-Threaded
11	325-12	2	Screw-HH
12	116-0039	1	Lever-Control Motion, RH
13	116-0040	1	Lever-Control Motion, LH

Ref.	Part Number	Qty.	Description
14	109-6591	1	RH Steering Handle ASM
14:1	106-9987	1	Grip-Control, Motion
15	109-6592	1	LH Steering Handle ASM
15:1	106-9987	1	Grip-Control, Motion
16	104-8301	4	Nut-HF, NI
17	323-7	4	Screw-HH
18	109-5575	2	Spring-Leaf
19	109-8107	2	Pump Linkage Rear ASM
19:2	3219-2	2	Nut-Hex
19:3	1-323245	2	Spring-Compression
19:4	1-633152	1	Balljoint-LH
19:5	1-543017	1	Balljoint-RH
20	109-9505	4	Washer-Spring
21	3256-6	2	Washer-Flat
22	32128-56	2	Nut-HF
23	3256-23	2	Washer-Plain
24	3218-5	2	Nut-Jam
25	115-1794	2	Screw-HHF

● Use Pro-Lock, Nut Type (P/N 1-840022, .5ml tube) on threads.

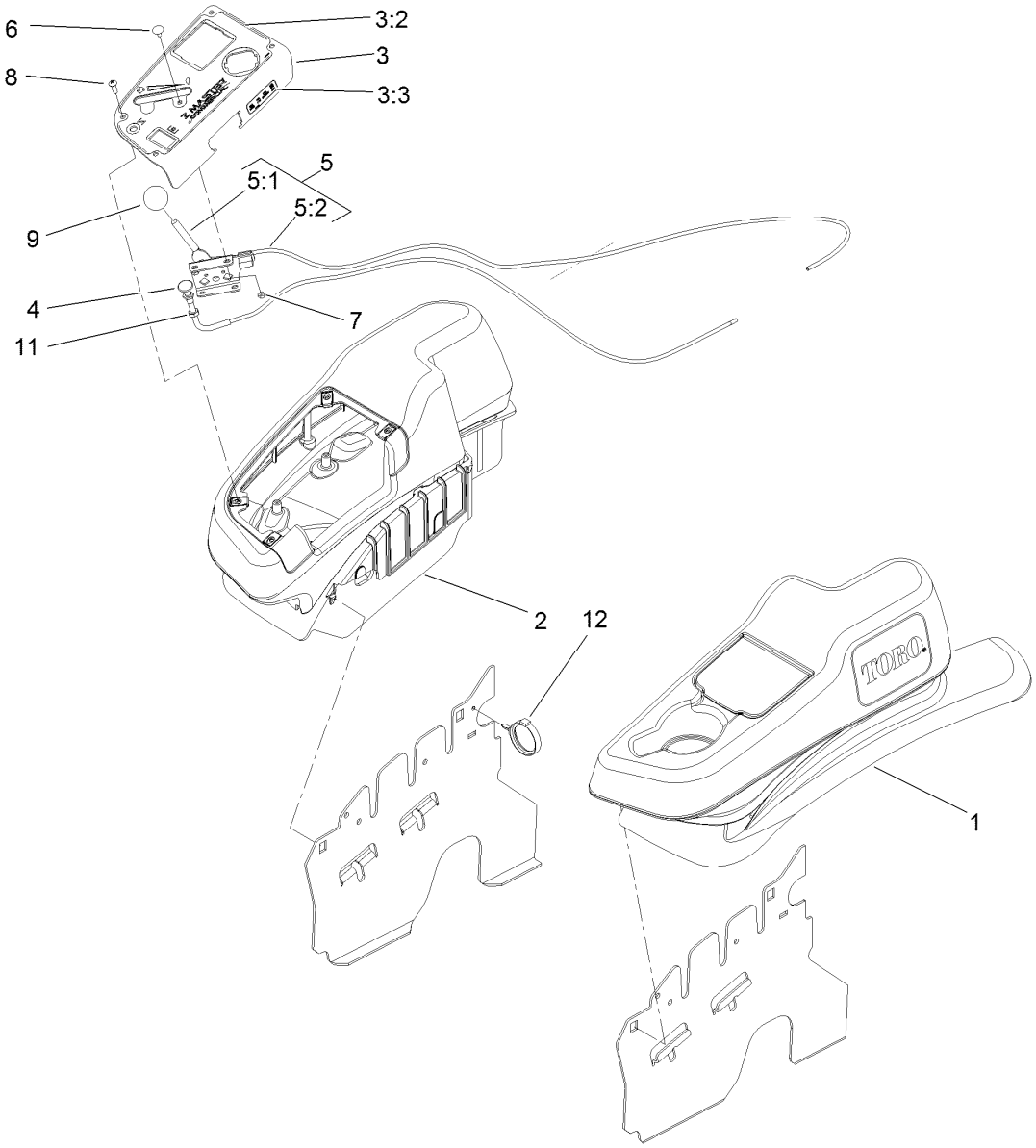

Fender, Console and Control Assembly

Ref.	Part Number	Qty.	Description
1	115-7403	1	LH Narrow Fender/Console ASM
2	115-7402	1	RH Narrow Fender/Console ASM
3	114-9837	1	Control Panel ASM
3:2	120-5898	1	Decal-Control Panel
3:3	114-4466	1	Decal-Fuses
4	115-2753	1	Control-Choke
5	110-5727	1	Throttle Control ASM
5:1	112-2334	1	Lever-Throttle
5:2	110-5728	1	Cable-Throttle
6	1-807513	2	Bolt-CARR
7	3296-2	2	Nut-Lock, NI
8	32105-15	4	Screw-HWH
9	1-603175	1	Knob-Ball
11	3220-3	1	Nut-HJ
12	117-7817	1	Clamp-Harness

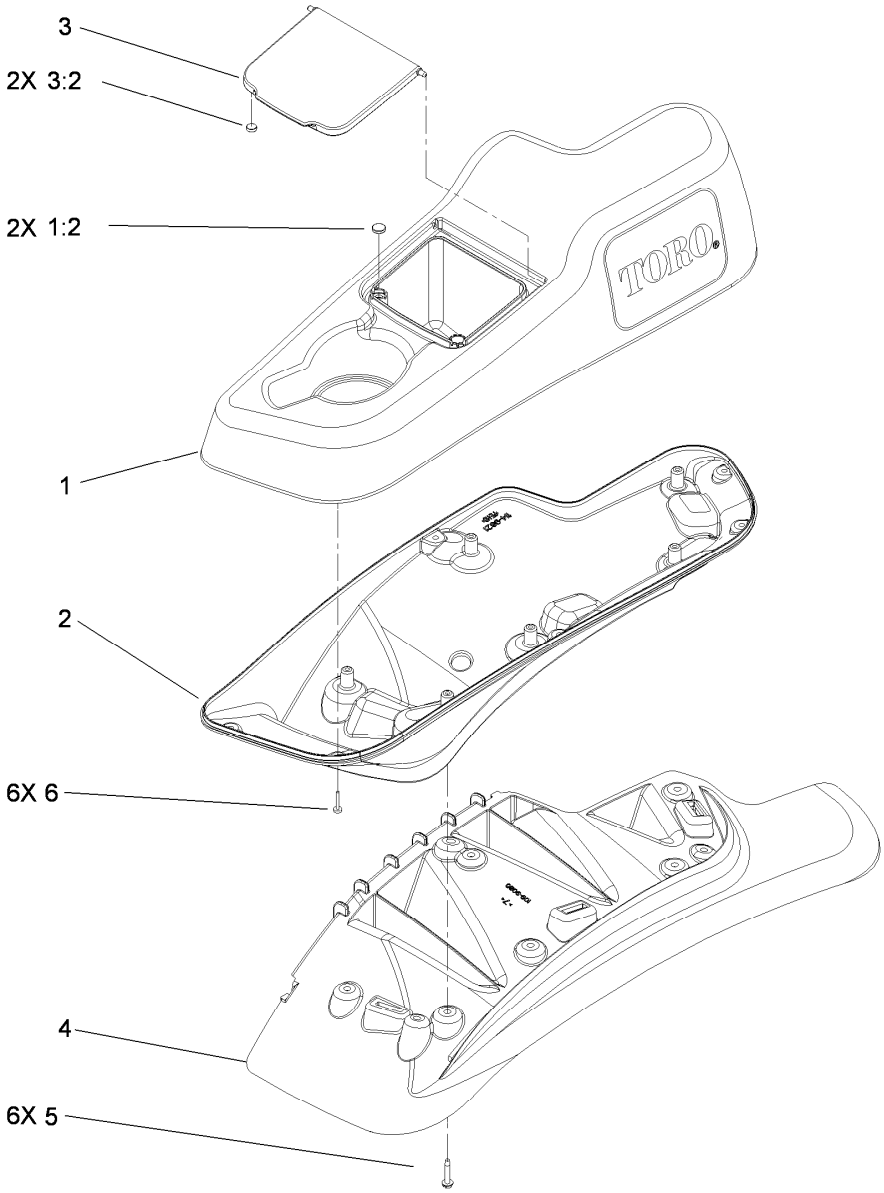

LH Console Assembly No. 115-7403

Ref.	*Part Number*	*Qty.*	*Description*
1	114-1541	1	LH Console Top ASM
1:2	117-0883	2	Puck
2	114-9821	1	LH Lower Console ASM
3	114-1536	1	Lid ASM
3:2	114-5896	2	Magnet
4	109-9080	1	Fender-LH
5	32144-89	6	Screw-Thread Forming
6	117-0347	6	Screw-PPH

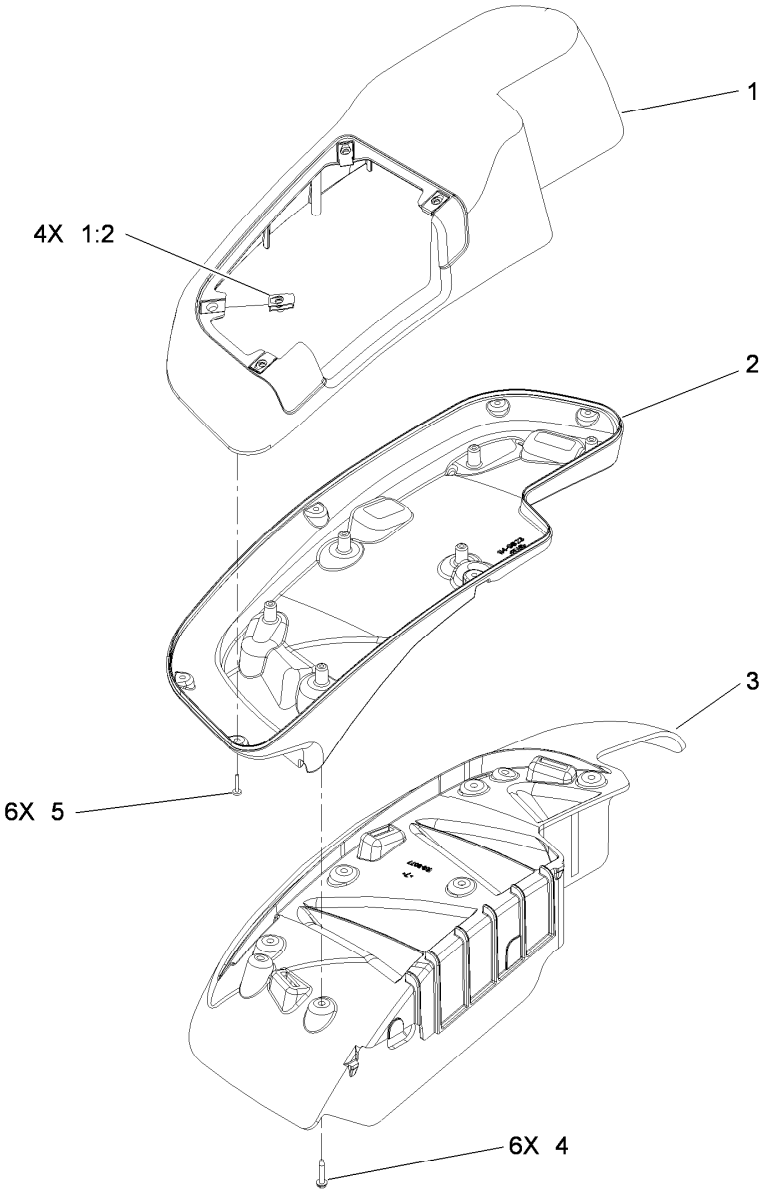

RH Console Assembly No. 115-7402

Ref.	*Part Number*	*Qty.*	*Description*
1	114-1542	1	RH Console Top ASM
1:2	107069	4	Clip
2	114-9823	1	Console-Narrow, RH
3	109-9077	1	Fender-Narrow, RH
4	32144-89	6	Screw-Thread Forming
5	117-0347	6	Screw-PPH

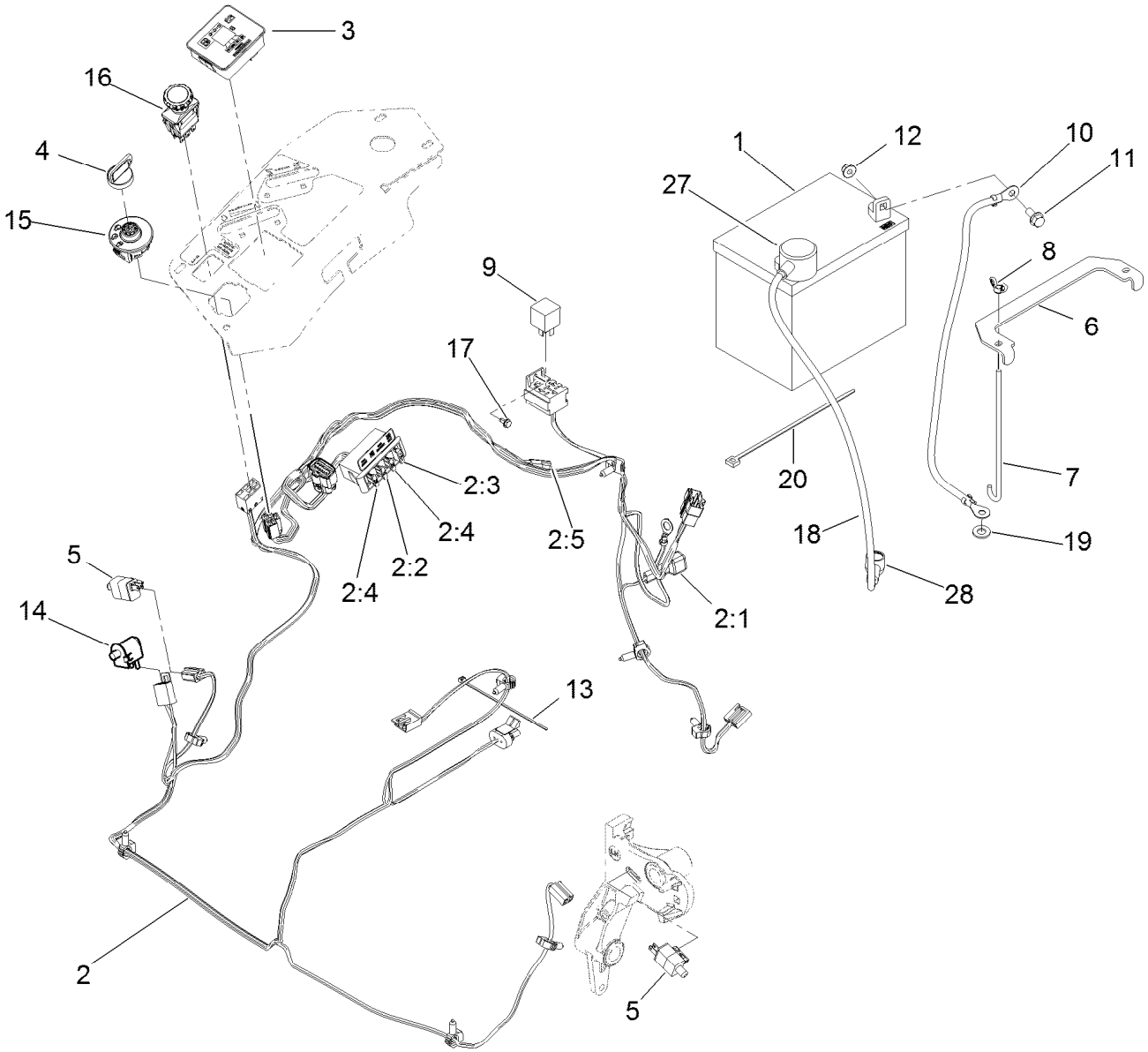

Electrical Assembly

Ref.	Part Number	Qty.	Description
1	104-2491	1	Battery
2	116-6009	1	Harness-Wire, Main ●
2:1	103-3895	1	Diode
2:2	218-578	1	Fuse-Blade, 10 Amp
2:3	109355	1	Fuse-Blade, 15 Amp
2:4	109102	2	Fuse-Blade, 25 Amp
2:5	116-0053	1	Cap-Plug
3	117-3882	1	Fuel/Hour Meter ASM
4	63-8360	1	Key-Ignition
5	110-6765	2	Switch
6	116-0042-03	1	Strap-Tie Down, Battery
7	1-633651	2	Bolt-Holddown
8	1-543792	2	Wingnut
9	1-643275	1	Relay

Ref.	Part Number	Qty.	Description
10	114-1218	1	Cable-Battery, Negative
11	3234-5	2	Screw-HHF
12	104-8300	2	Nut-HF, NI
13	1-303287	3	Tie-Cable
14	82-2190	1	Switch-Bail
15	117-2221	1	Switch-Ignition
16	116-0124	1	Switch-PTO, 10 Amp
17	104-2065	1	Screw-HWH
18	115-3864	1	Cable-Battery, Positive
19	3256-24	1	Washer-Flat
20	1-303335	1	Tie-Plastic
27	109-2407	1	Insulator-Battery
28	1-543393	1	Insulator-Solenoid

● Use dielectric grease on all unsealed connectors and terminals only. Do not apply in sealed connectors.

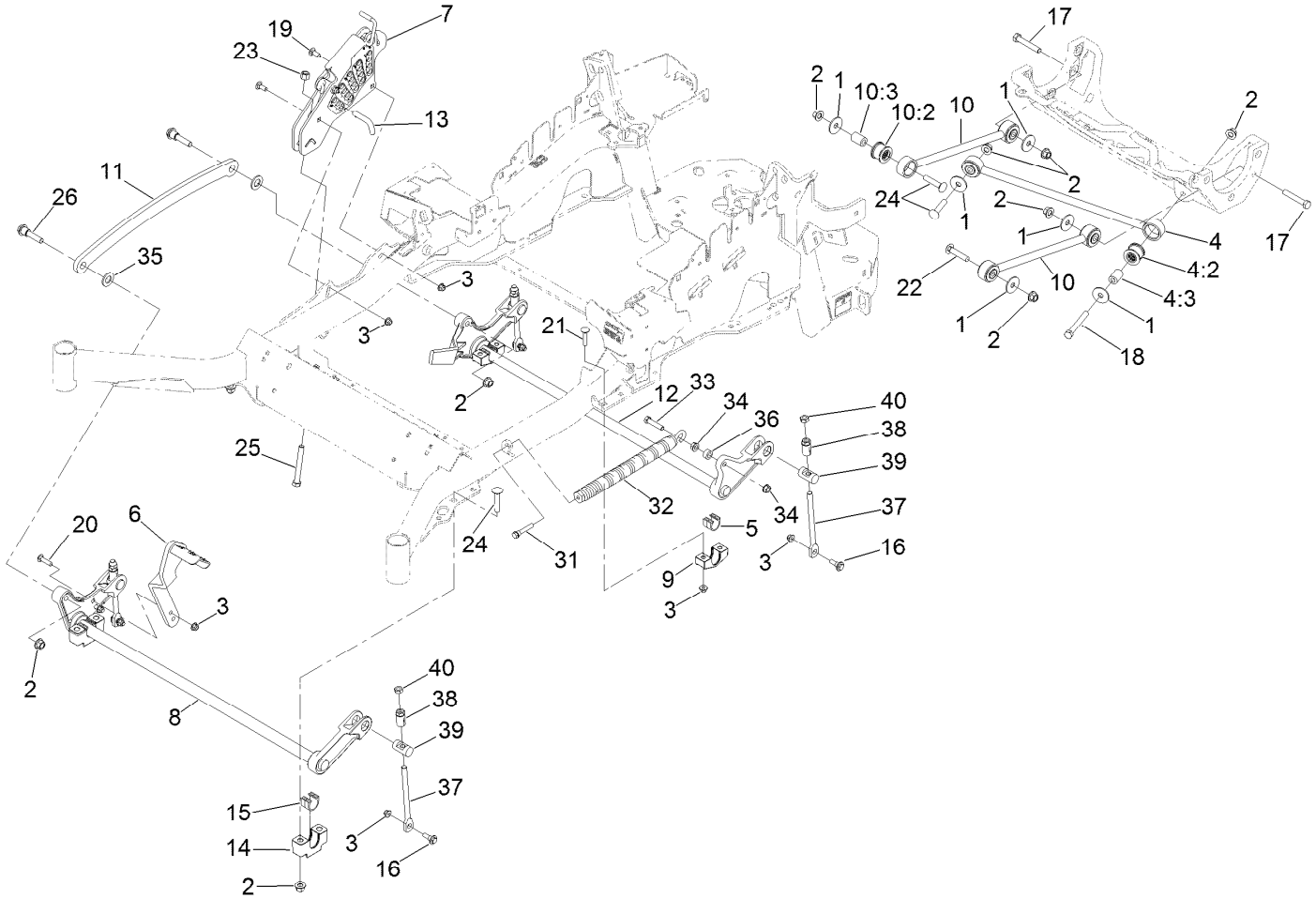

Deck Lift Assembly

Ref.	Part Number	Qty.	Description
1	86-1990	6	Washer-Thrust
2	99-5107	12	Nut-Lock
3	104-8301	12	Nut-HF, NI
4	109-5013	1	Panhard Rod ASM
4:2	109-5009	2	Bushing-Suspension, Rubber
4:3	109-5010	2	Spacer
5	109-7173	2	Bearing-Cross Shaft, Rear
6	116-1919-01	1	Lever-Foot
7	117-3842	1	Height-Of-Cut ASM
8	116-1771-03	1	Deck Lift-Front
9	116-0818-03	2	Support-Cross Shaft, Rear Bearing
10	109-7952	2	Deck Strut ASM
10:2	109-5009	2	Bushing-Suspension, Rubber
10:3	109-5010	2	Spacer
11	116-0797-03	1	Link-Lift, Deck
12	116-2645-03	1	Lift-Deck, Rear
13	116-5584	1	Pin-HOC
14	109-9409	2	Support-Bearing, Cross Shaft (Front)
15	109-9410	2	Bearing-Cross Shaft, Front
16	109-9840	4	Screw-Shoulder, HHF
17	325-12	2	Screw-HH
18	325-17	1	Screw-HH
19	3231-2	2	Bolt-CARR
20	3231-4	2	Screw-CARR
21	3231-5	4	Screw-CARR
22	3233-34	3	Screw-CARR
23	3296-23	1	Nut-Lock, NI
24	116-1700	4	Bolt-CARR
25	116-0559	1	Bolt-TAP
26	116-2022	2	Screw-HHF, Shoulder
31	92-7674	1	Bolt-Shoulder
32	116-0886	1	Spring-Extension
33	109-9065	1	Screw-HH
34	32128-37	2	Nut-HF
35	3256-28	2	Washer-Flat
36	116-2695	1	Spacer
37	109-8007	4	Link-Adjuster, Deck Lift

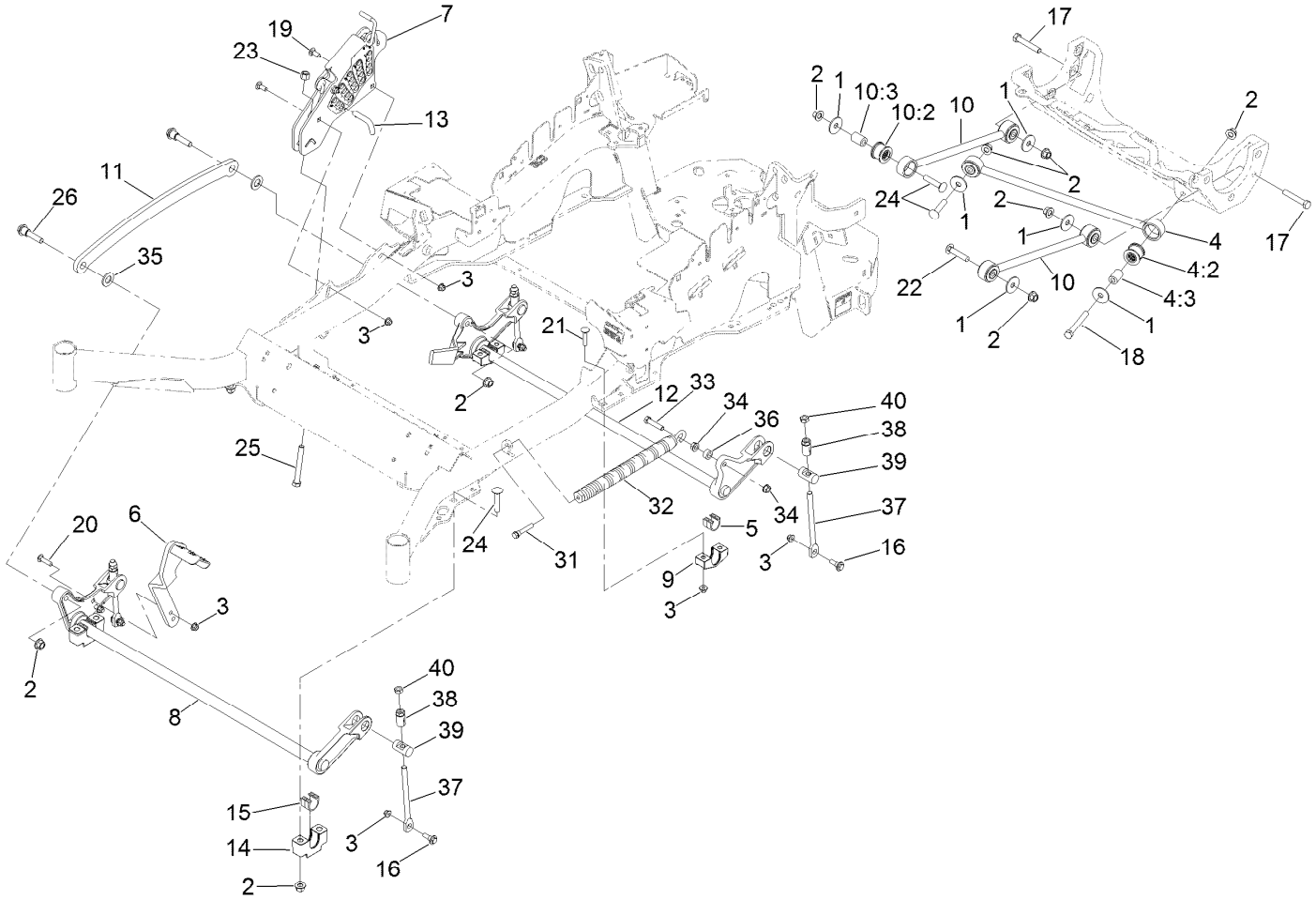

Deck Lift Assembly (continued)

Ref.	Part Number	Qty.	Description
38	109-7840	4	Adjuster-Lift, Deck
39	109-8353	4	Trunnion
40	3218-5	4	Nut-Jam

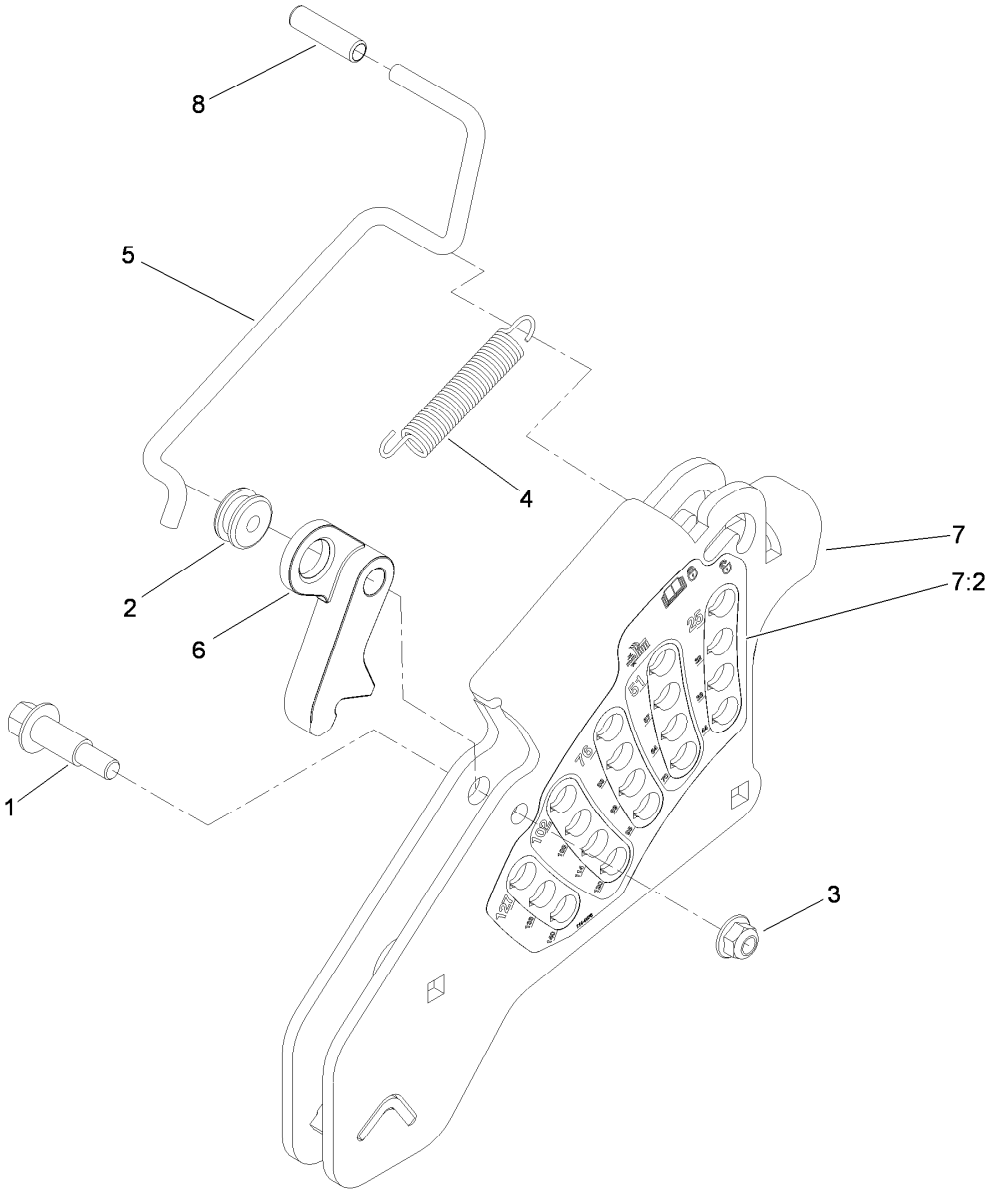

Height-of-Cut Assembly No. 117-3842

Ref.	*Part Number*	*Qty.*	*Description*
1	62-1330	1	Bolt-Shoulder
2	109-7130	1	Grommet
3	104-8301	1	Nut-HF, NI
4	109-7124	1	Spring-Extension
5	109-7128	1	Rod-Lock, Transport
6	116-0118	1	Pawl-Transport, HOC
7	117-3837	1	Plate-Height Adjuster
7:2	114-4470	1	Decal-HOC
8	109-8250	1	Grip-Lever

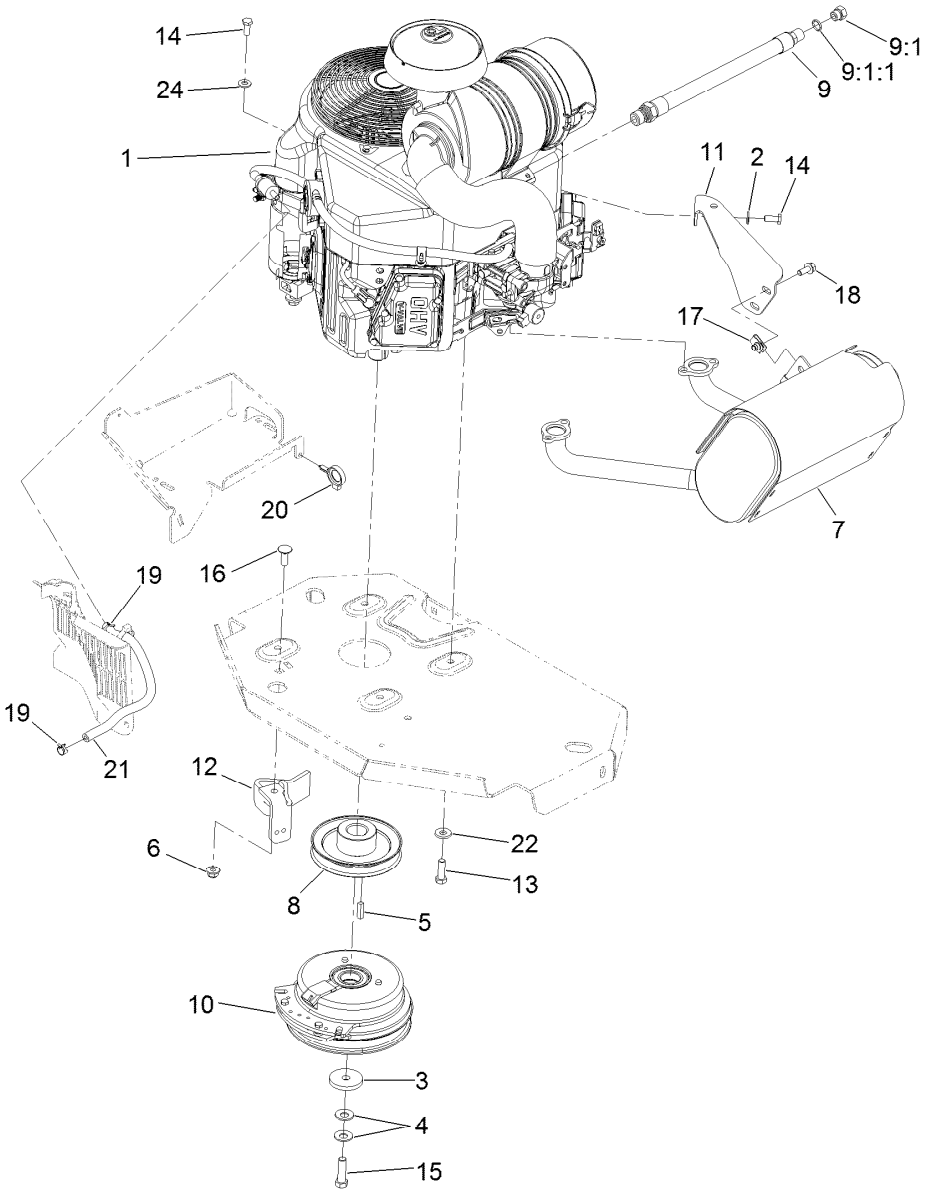

Engine, Muffler and Clutch Assembly

Ref.	Part Number	Qty.	Description
1		1	Engine-Kawasaki, Fx651V-S07-R ● ■
2	1-303334	1	Washer-Spring
3	109-6919	1	Washer-Clutch
4	1-603610	2	Washer-Spring
5	1-807259	1	Key
6	104-8301	1	Nut-HF, NI
7	116-1715	1	Muffler
8	109-9905	1	Sheave
9	116-4924	1	Engine Oil Drain Hose ASM ▲
9:1	353-508	1	Plug-HH
9:1:1	237-42	1	O-Ring
10	116-1620	1	Clutch Kit

Ref.	Part Number	Qty.	Description
11	116-1435	1	Bracket-Muffler
12	116-2612-01	1	Clutch-Anchor
13	323-7	4	Screw-HH
14	33114-020	2	Screw-HH
15	109-9761	1	Screw-HH, W/Loctite ◆
16	3231-22	1	Screw-CARR
17	94-2413	2	Nut-U
18	3234-5	2	Screw-HHF
19	2412-98	2	Clamp-Hose
20	105-1853	1	Clamp-Hose
21	109-0296	1	Hose-Fuel
22	98-5975	4	Washer-Belleville
24	33094-00	1	Washer-Plain

● Not serviced separately
▲ Use a Teflon Pipe Sealant or equivalent on threads.
◆ Use Pro-Lock, Nut Type (P/N 1-840022, .5ml tube) on threads.
■ Obtain parts from www.kawpower.com

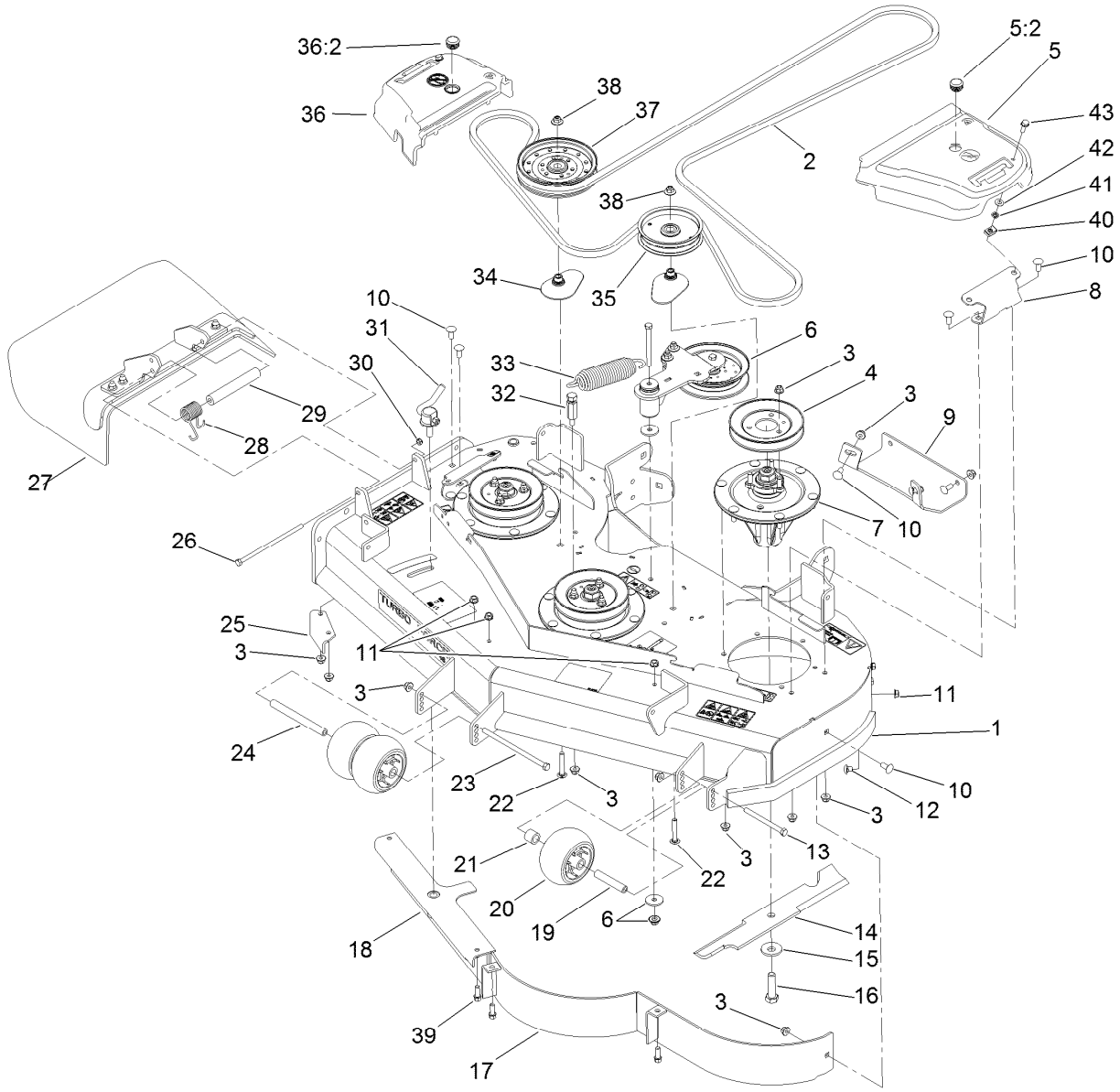

Deck Assembly

Ref.	Part Number	Qty.	Description
1	119-6656	1	Deck ASM
2	115-7407	1	Belt-V
3	104-8301	41	Nut-HF, NI
4	115-7440	3	Pulley
5	117-7814	1	LH Belt Cover ASM
5:2	117-3824	1	Plug-Plastic
6		1	Idler Arm ASM ●
7	119-8560	3	Spindle ASM
8	114-5881-01	2	Bracket-Cover, Belt
9	112-4230-01	1	Plate-Skid
10	3231-27	11	Screw-CARR
11	3290-357	6	Nut-HHF, Whiz
12	108-5387	3	Screw-CARR
13	323-23	1	Screw-HH
14	107-3192-03	3	Blade-16.5 Inch (High Flow)
15	103-0865	3	Washer-Blade Bolt, Heavy
16	51-4060	3	Screw-Blade
17	114-5862-01	1	Baffle

Ref.	Part Number	Qty.	Description
18	107-8506-01	1	Baffle
19	98-7912	1	Tube-Spanner
20	1-603299	3	Roller-Scalp, Anti
21	98-7913	1	Tube-Spacer
22	3231-40	2	Bolt-CARR
23	108-5388	1	Screw-HH
24	98-5967	1	Spacer-Wheel
25	107-8541-01	1	Baffle-Discharge
26	322-50	1	Screw-HH
27	108-2792	1	Rubber Deflector ASM
28	108-4052	1	Spring-Torsion
29	105-4622	1	Spacer
30	3296-47	1	Nut-Lock, NI
31	107-1664	1	Lever ASM
32	114-5867	1	Anchor-Spring, Tall
33	116-0133	1	Extension-Spring
34	109-2872	2	Spacer-Pulley
35	1-613098	1	Pulley-Idler

● Not serviced separately

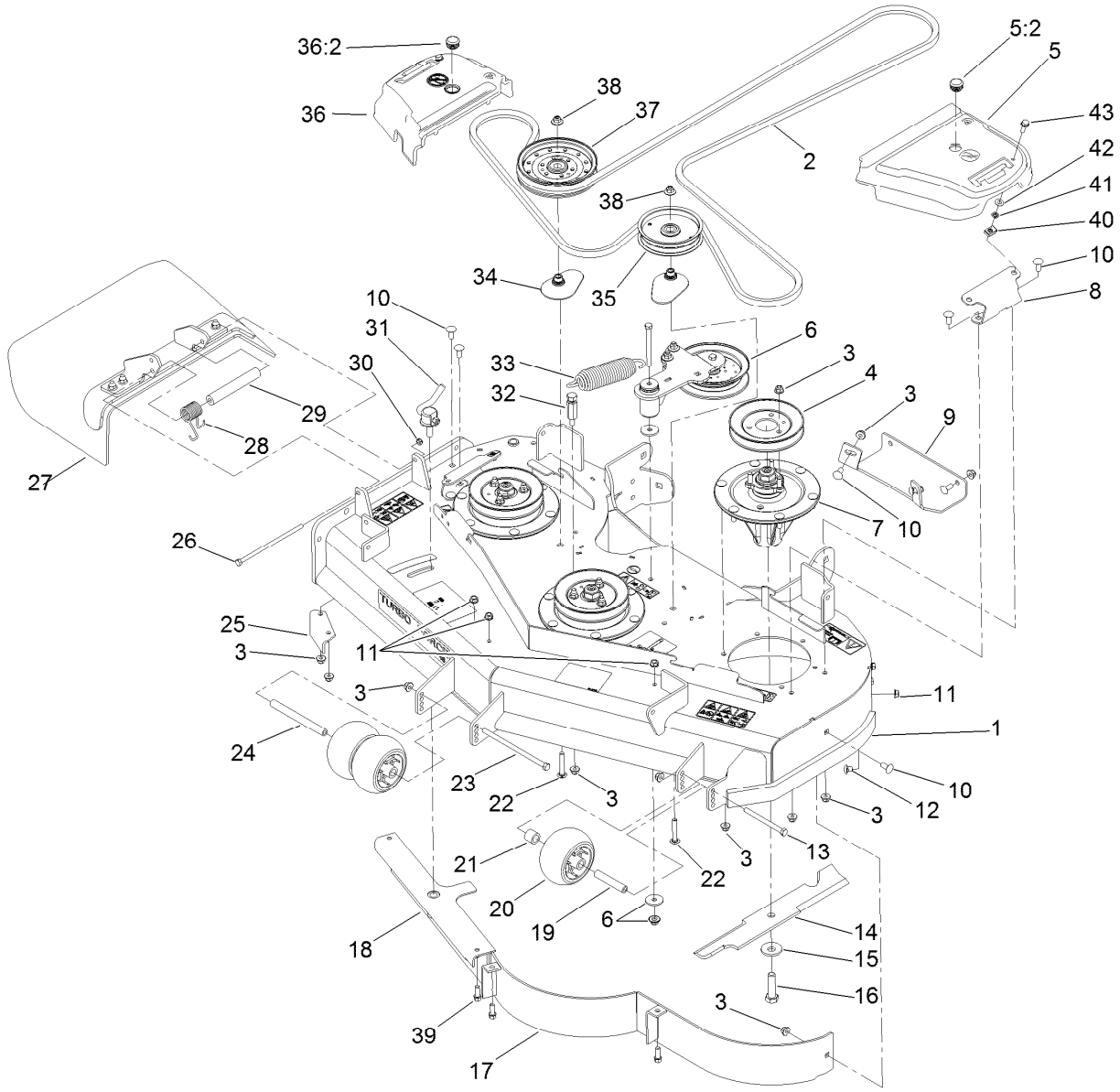

Deck Assembly (continued)

Ref.	Part Number	Qty.	Description
36	117-7813	1	RH Belt Cover ASM
36:2	117-3824	1	Plug-Plastic
37	116-4670	1	Pulley-Idler, Flat
38	109-6658	2	Nut-Flange, NI
39	92-1624	3	Screw-HWH

Ref.	Part Number	Qty.	Description
40	94-2413	2	Nut-U
41	117-2749	2	Nut-Push
42	73-0041	2	Washer-Thrust
43	3234-29	2	Screw-HHF

● Not serviced separately

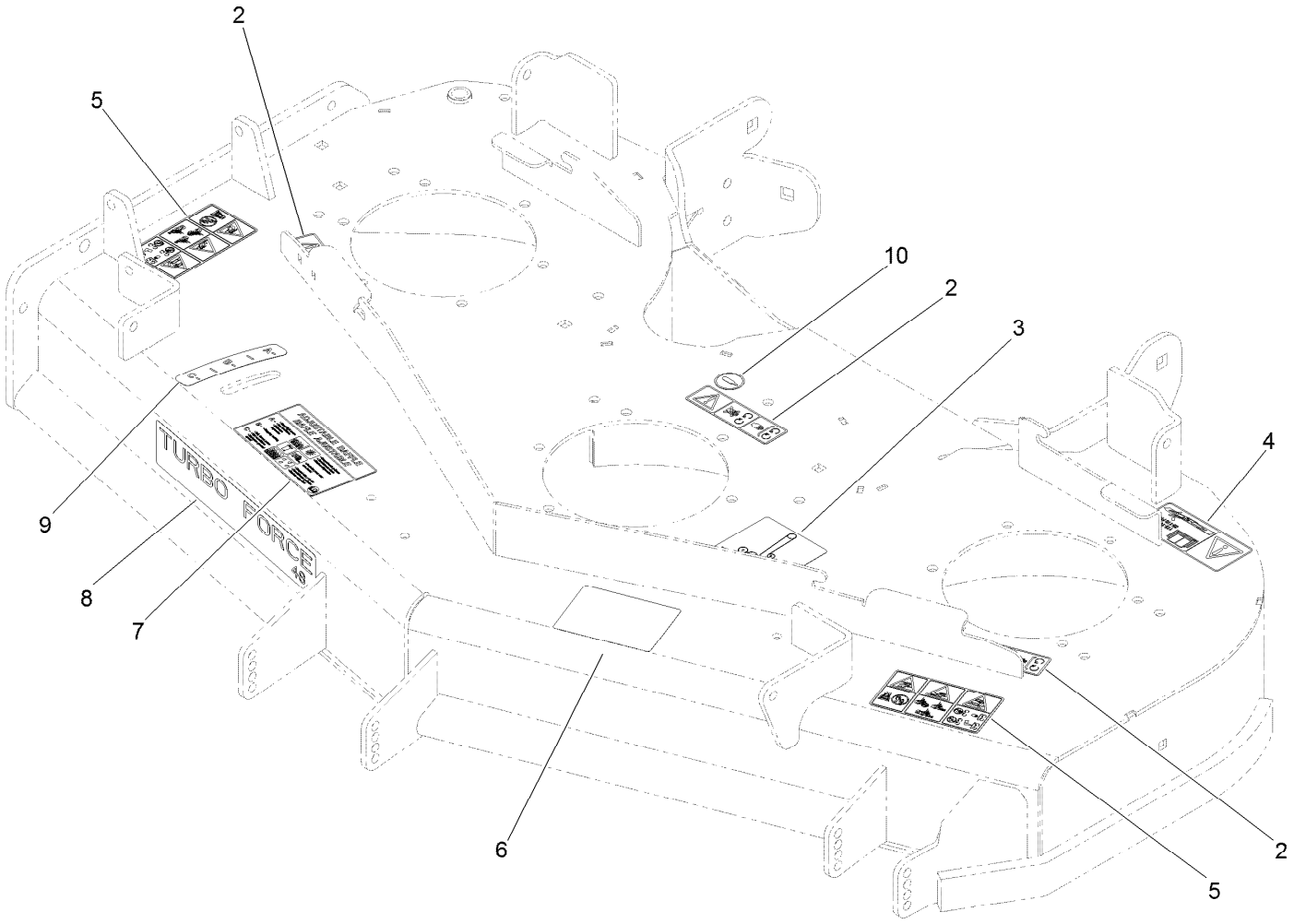

Deck Decal Assembly No. 119-6656

Ref.	*Part Number*	*Qty.*	*Description*
2	112-9028	3	Decal-Cover, Missing
3	115-7445	1	Decal-Routing, Deck Belt
4	93-7818	1	Decal-Torque, Blade Bolt
5	117-3848	2	Decal-Danger
6	99-8939	1	Decal-Anti Scalp
7	110-2068	1	Decal-Adjustment, Baffle
8	107-1690	1	Decal
9	110-2067	1	Decal-Setting, Baffle
10	58-6520	1	Decal-Grease

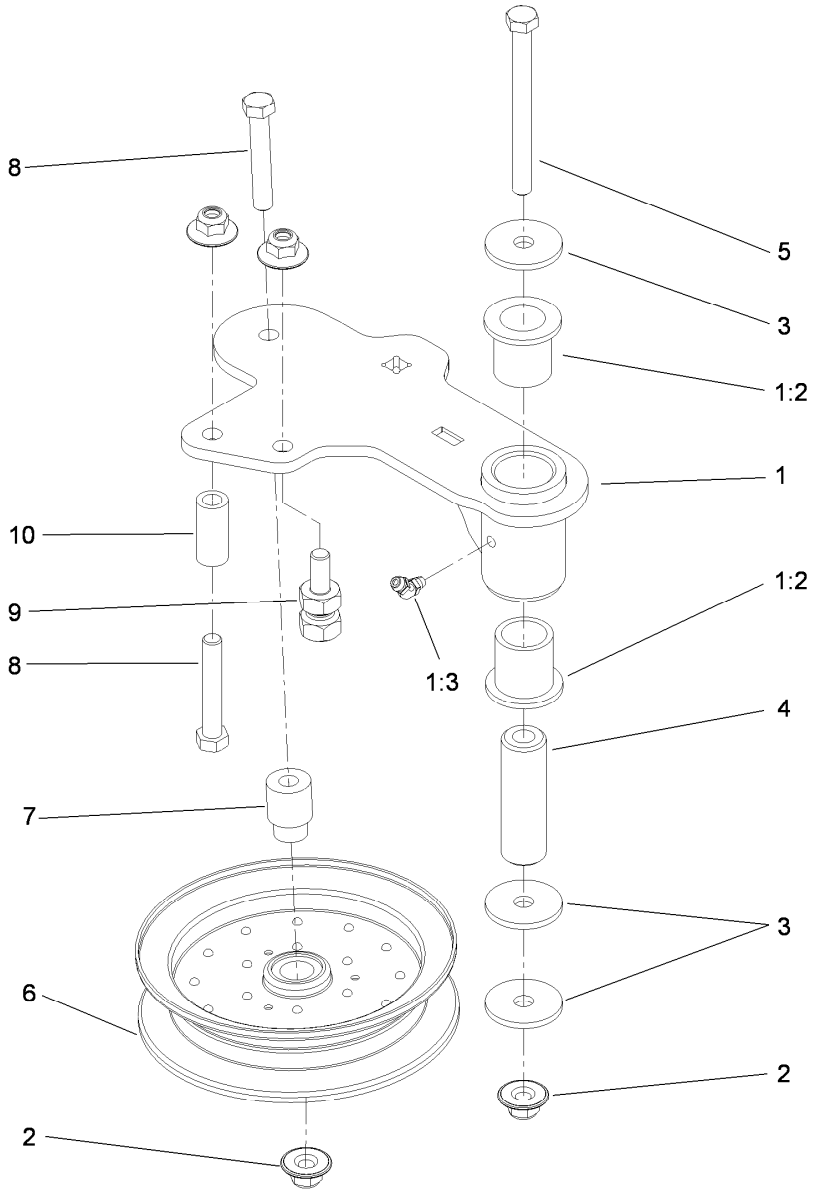

Idler Assembly

Ref.	Part Number	Qty.	Description
1	114-5870	1	Idler Arm ASM
1:2	1-303514	2	Bearing-Flanged
1:3	1481	1	Fitting-Grease
2	109-6658	4	Nut-Flange, NI
3	1-213069	3	Washer
4	114-5848	1	Spacer-Plain
5	98-5961	1	Screw-HH
6	116-4668	1	Idler-Pulley, Flanged
7	112-4212	1	Mount-Pulley
8	323-11	2	Screw-HH
9	114-5866	1	Anchor-Spring, Short
10	104-0151	1	Spacer

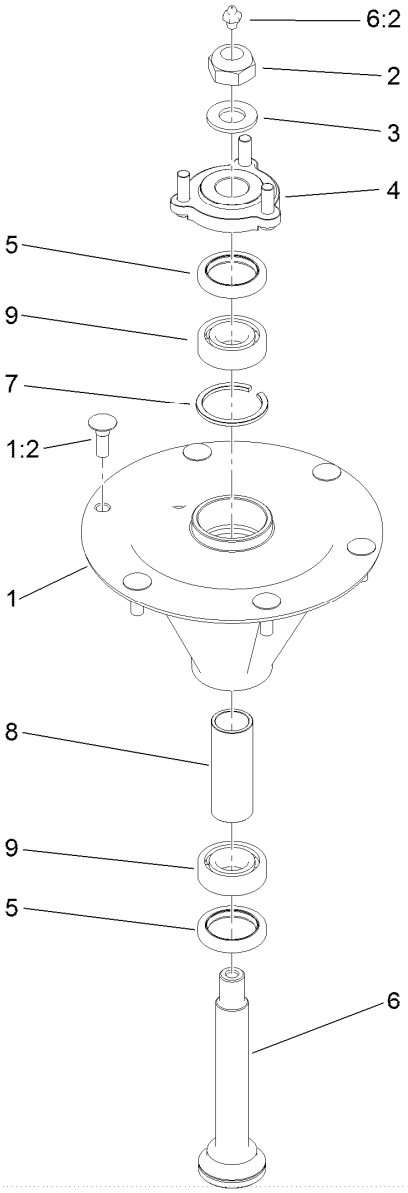

Spindle Assembly No. 119-8560

Ref.	Part Number	Qty.	Description
1		1	Spindle Housing And Studs ASM ●
1:2	114-8195	6	Bolt-Neck, Ribbed
2	3296-67	1	Nut-Lock, NI
3	92-5836	1	Washer
4	117-6172	1	Spindle Hub ASM
5	253-133	2	Seal-Oil
6	119-8527	1	Shaft-Spindle
6:2	302-2	1	Fitting-Grease
7	119-8532	1	Snap Ring
8	117-6184	1	Spacer
9	119-8558	2	Bearing-Noseal

● Not serviced separately

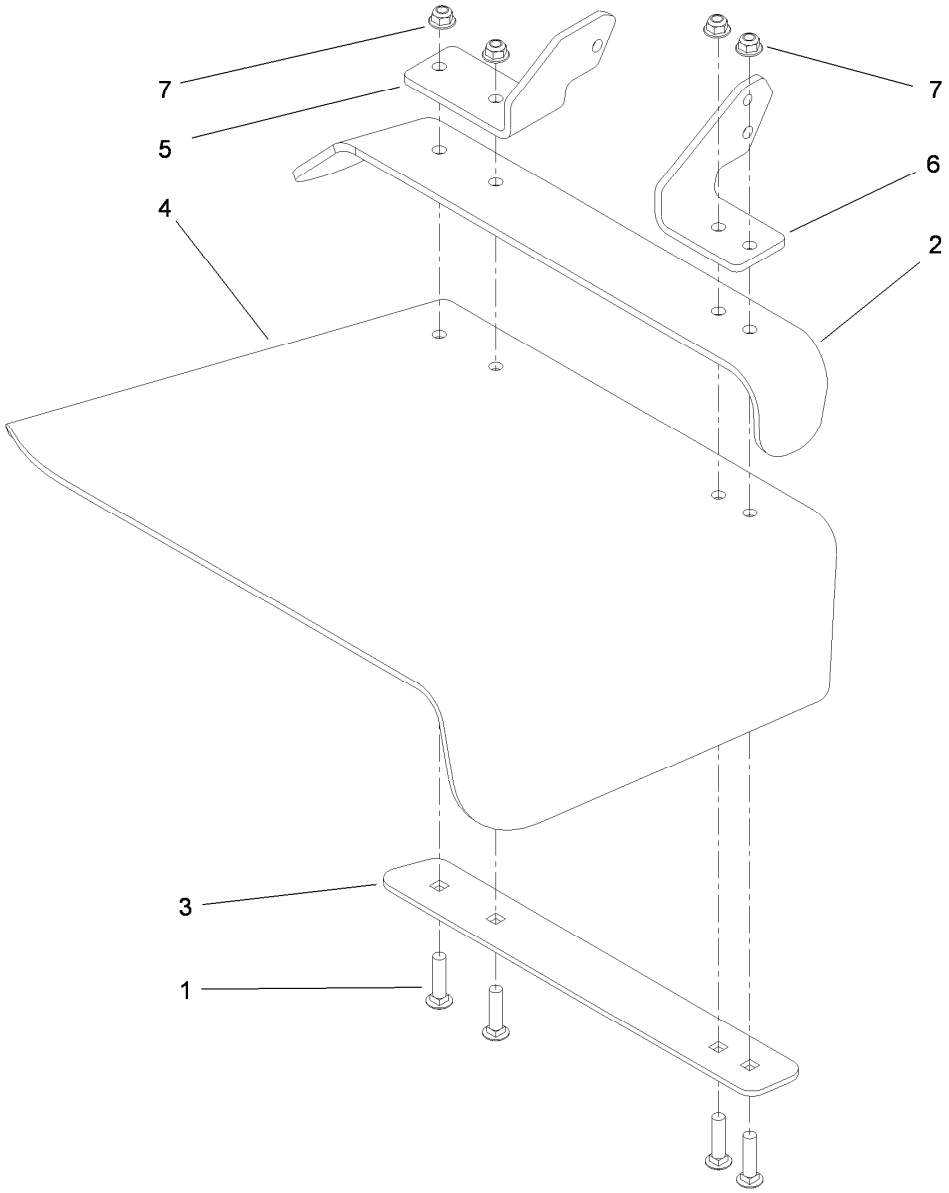

Rubber Deflector Assembly No. 108-2792

Ref.	*Part Number*	*Qty.*	*Description*
1	3231-4	4	Screw-CARR
2	106-3246-01	1	Deflector
3	106-3248-03	1	Strap-Discharge
4	108-5029	1	Deflector-Rubber
5	108-4059-01	1	Plate-Hinge, Rear
6	106-3253-01	1	Plate-Hinge, Front
7	104-8301	4	Nut-HF, NI

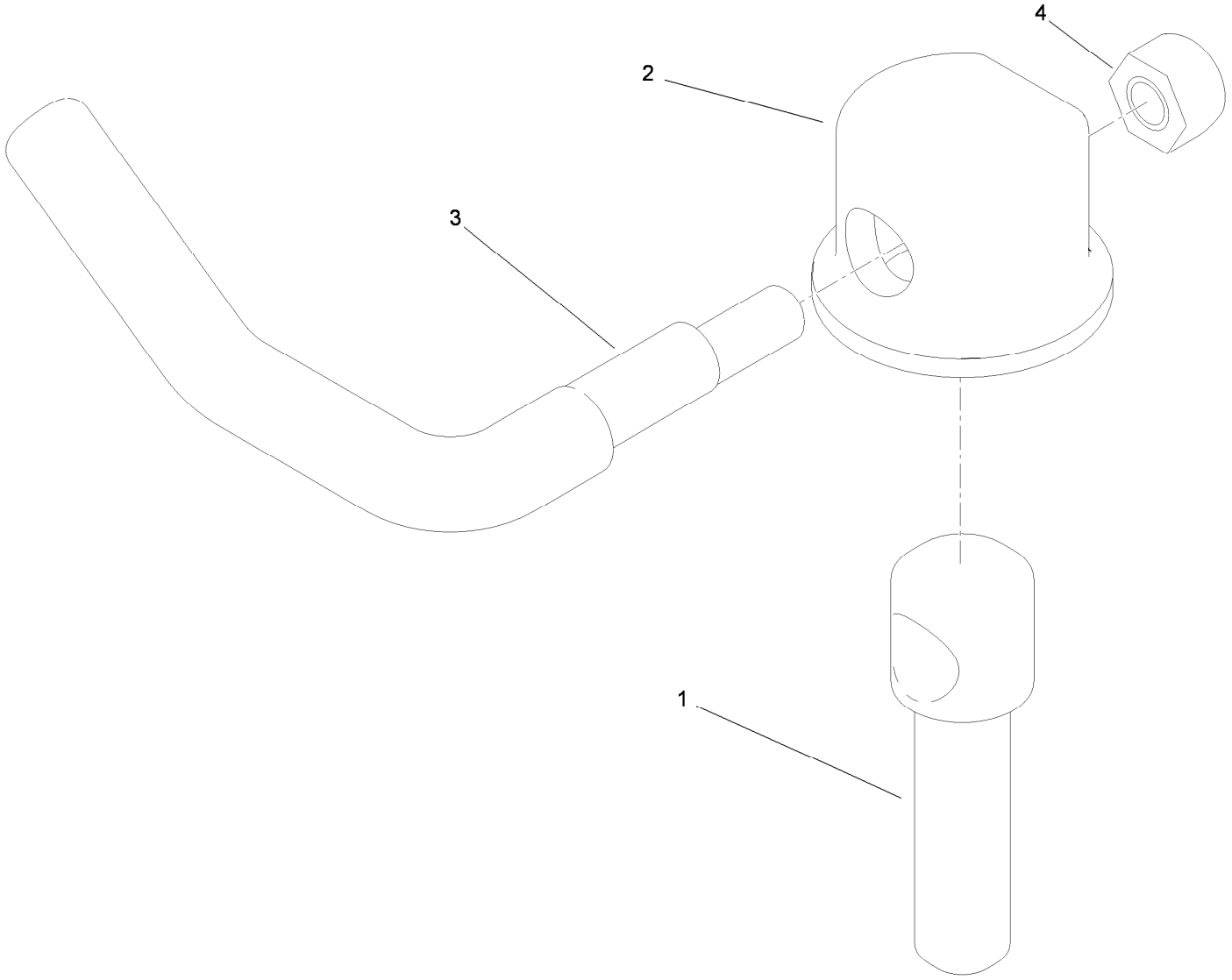

Lever Assembly No. 107-1664

Ref.	*Part Number*	*Qty.*	*Description*
1	106-3239	1	Screw-Lock
2	107-1644	1	Cap-Lock
3	106-3241	1	Lever-Lock
4	3296-29	1	Nut-Lock, NI

Attachments and Accessories

For 74902TE Z Master Riding Mower with 48in TURBO FORCE Side Discharge Mower

Product Name	Model/Part
Blade-Hi Flow, 16.5in	107-3192-03
Blade-Low Flow, 16.5in	107-3193-03
Blade-Mid Flow, 16.5in	107-3194-03
Blade-Atomic, 16.5in	107-3195-03
Blade-Recycling, 16.5in	107-3196-03
Hitch Kit	109-9487
Blade-Hi Flow, 16.5in (6 Pack)	110-0414
Blade-Lo Flow, 16.5in (6 Pack)	110-0415
Blade-Recycler, 16.5in (6 Pack)	110-0416
Blade-Atomic, 16.5in (6 Pack)	110-0417
Blade-Mid Flow, 16.5in (6 Pack)	110-0418
Hypr-Oil 500 (quart)	114-4713
Hypr-Oil 500 (gallon)	114-4714
Hypr-Oil 500-5 (5 gallon)	114-4715
Bimini Folding Shade Assembly	115-4510
Recycler Kit	115-7466
Roller Striper Kit	115-7470
Light Kit	116-1154
Z Stand Kit	117-0350
Operator Controlled Discharge Chute Kit	117-3600
Deluxe Suspension Seat Kit	117-6174
CE Bagger Compliance Kit	119-4240
Toro Deluxe Rider Cover	490-7319
Spark Arrestor Screen	75-6880
Blower and Drive Kit	78551
E-Z Vac Twin Bagging System	78562
E-Z Vac DFS Collection System	78566
Filter Minder Gauge	99-4664
Trash Holder Kit	TC26

TORO®

Count on it.