Form No. 3428-797 Rev B

TORO®

Count on it.

Parts Catalog

# Groundsmaster® 4100

## Rotary Mower

**Model No. 30608—Serial No. 403450001 and Up**

Register at www.Toro.com.
Original Instructions (EN)

CE

*3428-797* B

# Ordering Replacement Parts

To order replacement parts, please supply the part number, the quantity, and the description of each part desired.

### Understanding Reference Numbers

Each identified part in an illustration has a reference number. The reference number for a part also appears in the parts list, along with other information about the part.

This catalog uses two special reference number formats, one to indicate parts in a service assembly and another to indicate the quantity of a given part in an illustration.

### Service Assembly Reference Numbers

Parts in service assemblies have reference numbers in the form a:b. The a represents the reference number of the entire service assembly and the b represents a sequential number unique to each part within the service assembly.

For example, a wheel assembly might be identified by reference number 6, the tire by 6:1, the valve by 6:2, and the wheel by 6:3. When you order the assembly identified by reference number 6, you receive all parts identified by reference numbers 6:1,6:2, and 6:3. However, you may also order any part individually. Reference numbers of this type appear in illustration and in parts lists.

### Reference Numbers Indicating Quantity

In an illustration, if a reference number indicates more than one part, the reference number has the form nX y. The n represents the quantity of the part, the X is the multiplication symbol, and the y represents the reference number.

For example, in an illustration, the reference number 2X 37 means that two of the parts identified by reference number 37 are indicated.

# Contents

Front Frame and Steering Assembly . . . 5
Planetary Assembly No. 136-2913 . . . 6
Brake Assembly No. 100-3070-03 . . . 7
Brake Assembly No. 100-3069-03 . . . 8
Battery, Shield and Rear Cover Assembly . . . 9
Frame and Bumper Assembly . . . 10
ROPS Assembly . . . 11
Flywheel and Motor Mount Assembly . . . 12
Radiator Assembly . . . 13
Fan Mounting and Hardlines Assembly . . . 15
Hydraulic Motor Assembly No. 117-4769 . . . 16
Engine and Controller Assembly . . . 17
Piston Pump and Gear Pump Assembly . . . 18
Four-Section Gear Pump Assembly No. 120-8906 . . . 19
Hydraulic Pump Assembly No. 132-6100 . . . 20
Combination Manifold Assembly . . . 22
Combination Manifold Assembly No. 137-5581 . . . 23
Manifold Block Assembly . . . 25
Left PTO Manifold Assembly No. 131-1249 . . . 26
Rear Traction Manifold Assembly No. 121-1530 . . . 27
Center and Right PTO Manifold Assembly No. 131-1248 . . . 28
Drive Motor, Steer Valve and Filter Head Assembly . . . 29
Hydraulic Motor Assembly No. 120-8913 . . . 30
Steering Valve Assembly No. 132-6256 . . . 32
Hydraulic Reservoir Assembly . . . 34
Lift, Steer and Fan Hydraulic Assembly . . . 36
Oil Cooler Hydraulic Assembly . . . 38
Traction Hydraulic Assembly . . . 40
Rear Axle and Steering Cylinder Assembly . . . 41
Bevel Pinion Shaft Assembly Rear Axle Assembly No. 110-4750 . . . 43
Differential Assembly Rear Axle Assembly No. 110-4750 . . . 44
Axle Support Assembly Rear Axle Assembly No. 110-4750 . . . 45
Bevel Gear Case Assembly Rear Axle Assembly No. 110-4750 . . . 46
Bevel Gear Shaft Assembly Rear Axle Assembly No. 110-4750 . . . 47
Axle Case Assembly Rear Axle Assembly No. 110-4750 . . . 48
Axle Assembly Rear Axle Assembly No. 110-4750 . . . 49
Hydraulic Motor Assembly No. 120-8814 . . . 50
Steering Cylinder Assembly No. 121-1534 . . . 51
Hydraulic Fitting Assembly . . . 52
Hose and Tube Routing Assembly . . . 53
Fuel Tank and Air Cleaner Assembly . . . 54
Air Cleaner Assembly No. 99-5410 . . . 55
Hood Assembly . . . 56
Fuel/Water Separator and Shield Assembly . . . 57
Traction Pedal and Platform Assembly . . . 58
Brake Pedal Assembly . . . 60
Seat Base and Seat Assembly . . . 61
Vinyl Premium Seat Assembly No. 117-5676 . . . 63
Seat Suspension Assembly No. 130-2702 . . . 64
Steering and Controller Assembly . . . 66
Steering Column Assembly No. 132-6230 . . . 68
Fender, Tool Box and Cover Assembly . . . 69
Fender and Step Support Assembly . . . 70
Acoustic Foam Assembly . . . 71

**© 2020—The Toro® Company**
**8111 Lyndale Avenue South**
**Bloomington, MN 55420**



**Contact us at www.Toro.com.**
**Printed in the USA.**
**All Rights Reserved**

# Contents (continued)

Front Deck Lift Arm Assembly . . . 72
Hydraulic Motor Assembly No. 127-3694 . . . 74
Hydraulic Cylinder Assembly No. 120-8822 . . . 75
Front Deck Hydraulic Fitting Assembly . . . 76
Front Deck Hose Routing Assembly . . . 78
Platform Wire Harness and Fuse Assembly . . . 80
Rear Wire Harness Assembly . . . 81
Battery Cable and Ground Assembly . . . 82
Engine Harness Assembly . . . 83
Armrest Control Panel Assembly . . . 84
Center Deck Assembly . . . 86
Low Driven Spindle Assembly No. 119-4776 . . . 88
Hydraulic Cylinder Assembly No. 139-0957 . . . 89
High Driven Spindle Assembly No. 119-4549 . . . 90
Right Hand and Left Hand Deck Installation Assembly . . . 92
Caster Wheel Assembly . . . 94
Spindle and Blade Assembly . . . 96
Driving Spindle Assembly No. 119-4547 . . . 97
Double Driven Spindle Assembly No. 119-5298 . . . 98
Deck Cover Assembly . . . 99
Rear Discharge Baffle Assembly . . . 100
Cylinder Block Assembly . . . 101
Gear Housing Assembly . . . 102
Flywheel Housing and Oil Sump Assembly . . . 103
Cylinder Head and Cover Assembly . . . 104
Suction Manifold Assembly . . . 106
Exhaust Manifold Assembly . . . 107
Diesel Particulate Filter Assembly . . . 108
Camshaft and Driving Gear Assembly . . . 110
Turbine Assembly . . . 112
Crankshaft and Piston Assembly . . . 113
Lubrication and Oil System Assembly . . . 114
Lubrication Oil Line Assembly . . . 115
Fuel System Assembly . . . 116
Cooling Water System Assembly . . . 118
Fuel Injection Valve Assembly . . . 119
Fuel Line Assembly . . . 120
Starting Motor Assembly . . . 121
Generator Assembly . . . 122
Electric Parts Assembly . . . 123
Gasket Set . . . 124
Attachments and Accessories . . . 126

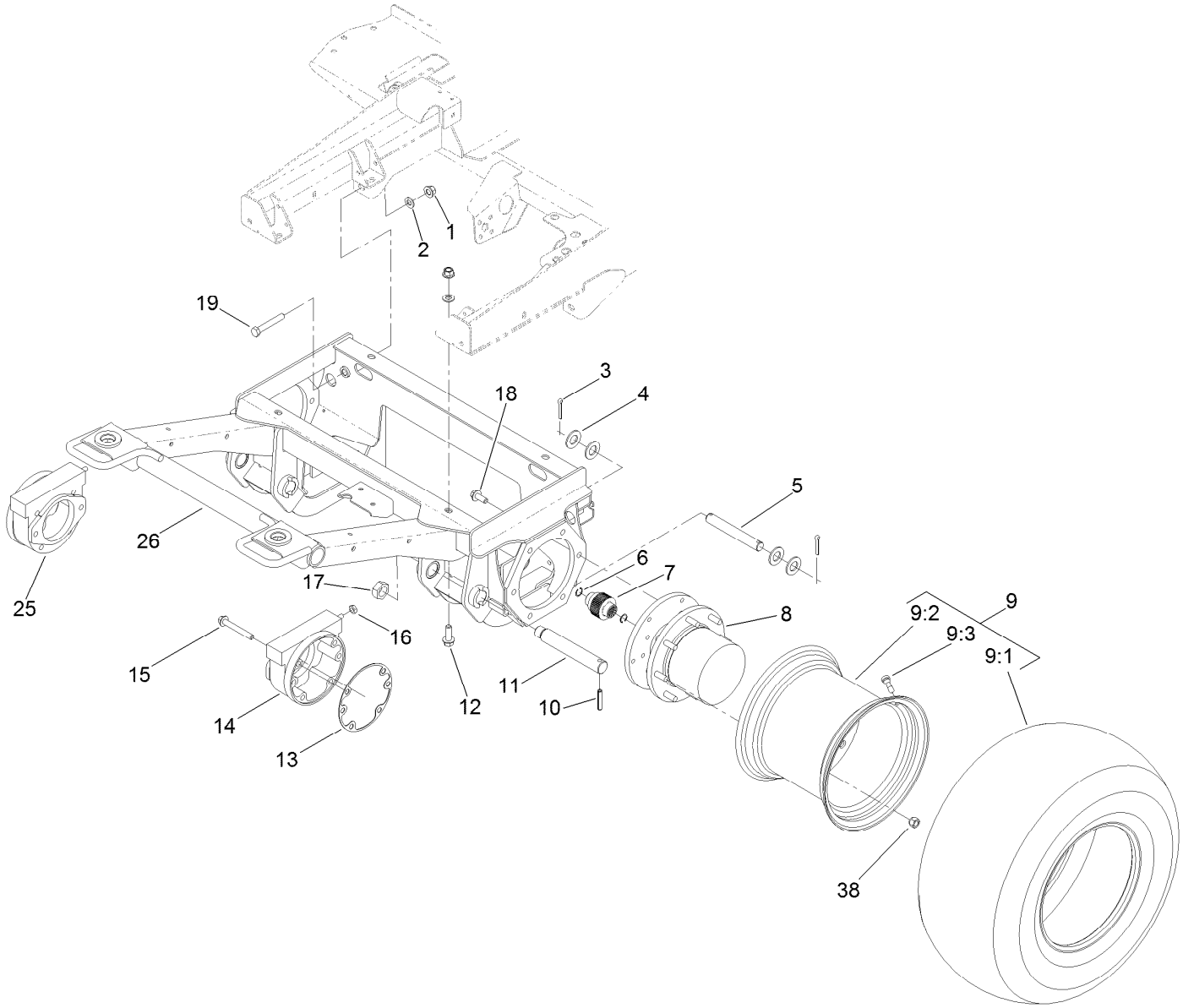


# Front Frame and Steering Assembly

| Ref. | Part Number | Qty. | Description |
|---|---|---|---|
| 1 | 99-5107 | 6 | Nut-Lock |
| 2 | 3256-26 | 6 | Washer-Flat |
| 3 | 3272-30 | 4 | Pin-Cotter |
| 4 | 3256-29 | 8 | Washer-Flat |
| 5 | 110-6006 | 2 | Pin-Clevis |
| 6 | 93-7972 | 4 | Ring-Retaining, Internal |
| 7 | 100-3046 | 2 | Shaft-Brake, Splined |
| 8 | 136-2913 | 2 | Planetary ASM |
| 9 | | 2 | Wheel And Tire ASM ● |
| 9:1 | 119-8313 | 1 | Tire |
| 9:2 | 136-4391 | 1 | Rim |
| 9:3 | 232-27 | 1 | Stem-Valve |
| 10 | 32121-110 | 2 | Pin-Roll, Slotted |
| 11 | 100-3017 | 2 | Pin-Arm, Lift |
| 12 | 100-6116 | 4 | Screw-HHF |
| 13 | 93-7984 | 2 | Gasket |
| 14 | 100-3070-03 | 1 | Brake ASM |
| 15 | 33106-080 | 8 | Screw-HHF |
| 16 | 3218-4 | 2 | Nut-Jam |
| 17 | 3296-49 | 2 | Nut-Lock, NI |
| 18 | 33106-030 | 12 | Screw-HHF |
| 19 | 325-13 | 2 | Screw-HH |
| 25 | 100-3069-03 | 1 | Brake ASM |
| 26 | 132-6250-03 | 1 | Frame-Front |
| 38 | 242-50 | 16 | Nut-Lug |

● Not serviced separately

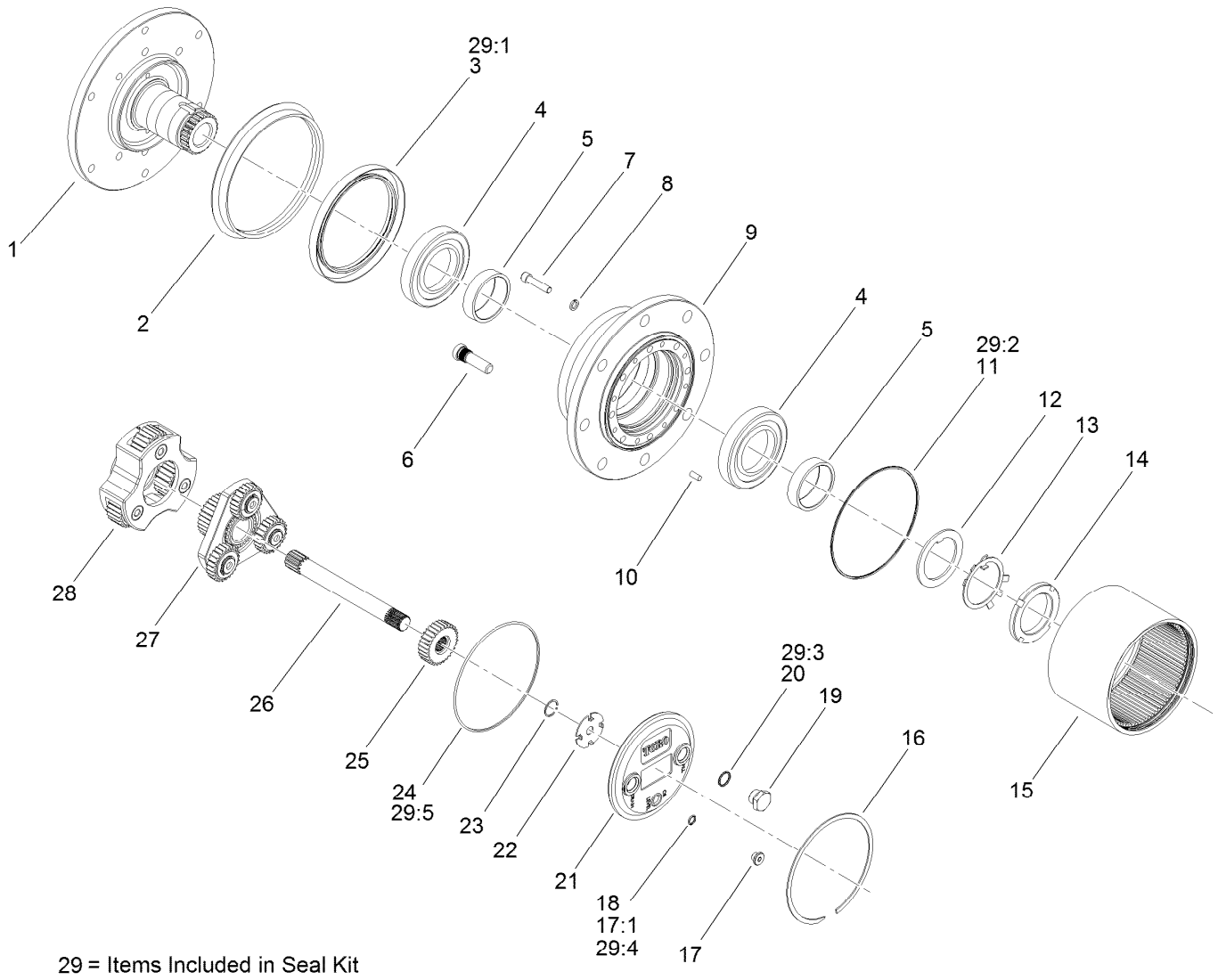


29 = Items Included in Seal Kit

# Planetary Assembly No. 136-2913

| Ref. | Part Number | Qty. | Description |
|---|---|---|---|
| 1 | | 1 | Spindle ● |
| 2 | 138-1204 | 1 | Seal-Boot |
| 3 | | 1 | Seal-Lip ● |
| 4 | 138-1205 | 2 | Bearing-Cup |
| 5 | 138-1206 | 2 | Bearing-Cone |
| 6 | 105-8124 | 8 | Stud-Wheel |
| 7 | 138-1207 | 8 | Screw-Socket Head |
| 8 | 138-1208 | 8 | Washer-Lock |
| 9 | | 1 | Housing ● |
| 10 | 105-8121 | 4 | Pin-Dowel |
| 11 | | 1 | O-Ring ● |
| 12 | 138-6928 | 1 | Spacer |
| 13 | 138-6929 | 1 | Washer |
| 14 | 138-6930 | 1 | Nut-Lock |
| 15 | 138-1209 | 1 | Gear-Ring |
| 16 | 138-1210 | 1 | Ring-Snap |
| 17 | 353-990 | 1 | Plug ASM |
| 17:1 | 237-78 | 1 | O-Ring |

| Ref. | Part Number | Qty. | Description |
|---|---|---|---|
| 18 | 237-78 | 1 | O-Ring |
| 19 | 138-1211 | 2 | Plug-Flange, Magnetic |
| 20 | 138-1212 | 2 | O-Ring |
| 21 | 138-1213 | 1 | Cap-End |
| 22 | 138-1214 | 1 | Washer-Thrust, Sun |
| 23 | 105-8131 | 2 | Ring-Retaining |
| 24 | | 1 | O-Ring ● |
| 25 | 138-1215 | 1 | Gear-Primary, Sun |
| 26 | 138-1216 | 1 | Shaft-Drive |
| 27 | 138-1217 | 1 | Primary Carrier ASM |
| 28 | 138-1218 | 1 | Secondary Carrier ASM |
| 29 | 138-1219 | 1 | Seal Kit |
| 29:1 | | 1 | Seal-Lip ● |
| 29:2 | | 1 | O-Ring ● |
| 29:3 | | 1 | O-Ring ● |
| 29:4 | | 1 | O-Ring ● |
| 29:5 | | 1 | O-Ring ● |

● Not serviced separately

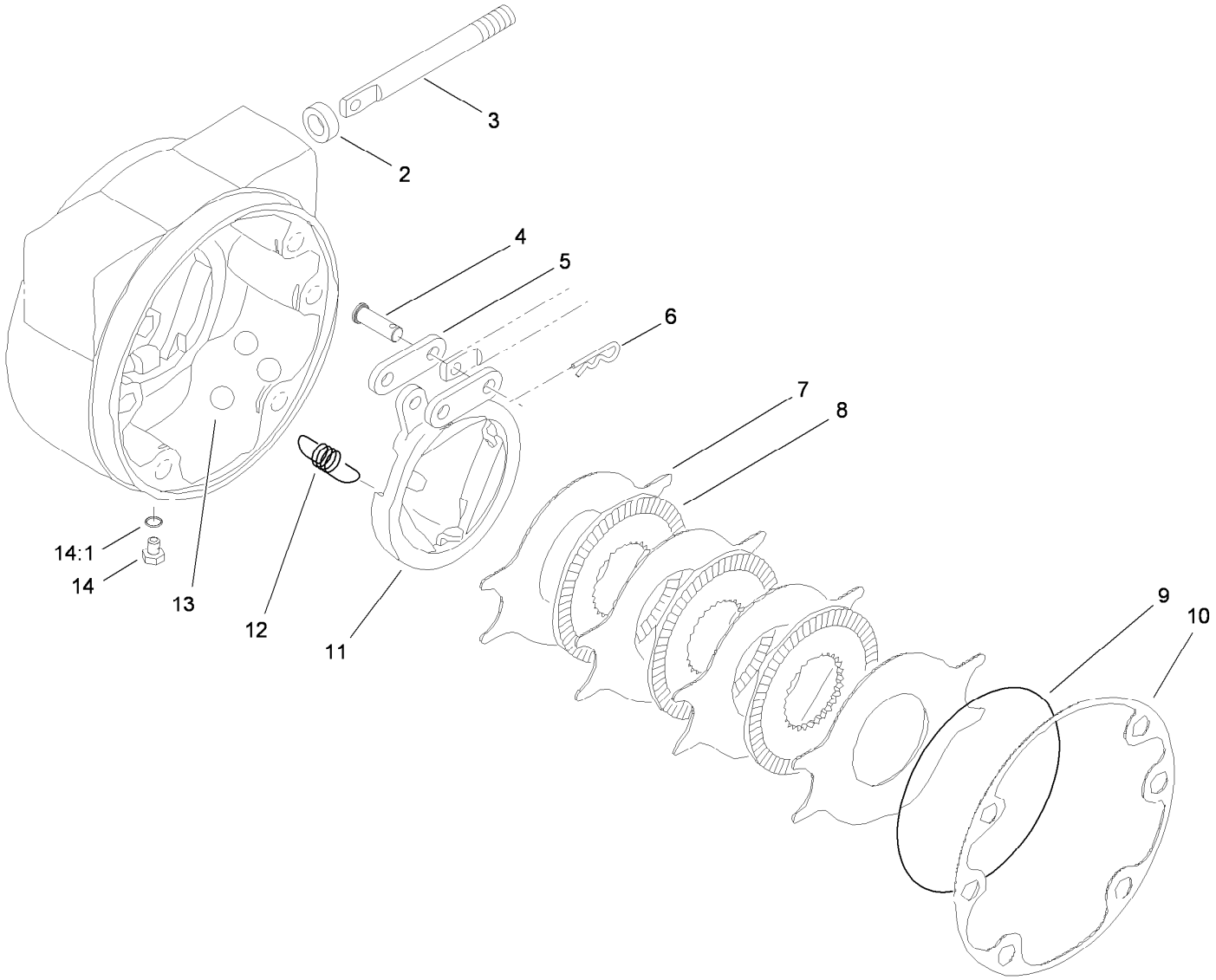


# Brake Assembly No. 100-3070-03

| Ref. | Part Number | Qty. | Description |
|---|---|---|---|
| 2 | 93-7977 | 1 | Seal |
| 3 | 93-7978 | 1 | Rod-Pull |
| 4 | 93-7983 | 2 | Pin-Clevis |
| 5 | 93-7980 | 2 | Link |
| 6 | 93-7979 | 2 | Pin-Hitch |
| 7 | 93-7986 | 4 | Disc-Stationary |
| 8 | 104-4278 | 3 | Disc-Rotating |
| 9 | 93-7976 | 1 | Ring-Retaining |
| 10 | 93-7984 | 1 | Gasket |
| 11 | 104-4279 | 1 | Actuator-Rotating |
| 12 | 93-7987 | 3 | Spring-Extension |
| 13 | 93-7985 | 3 | Ball |
| 14 | 353-990 | 2 | Plug ASM |
| 14:1 | 237-78 | 1 | O-Ring |

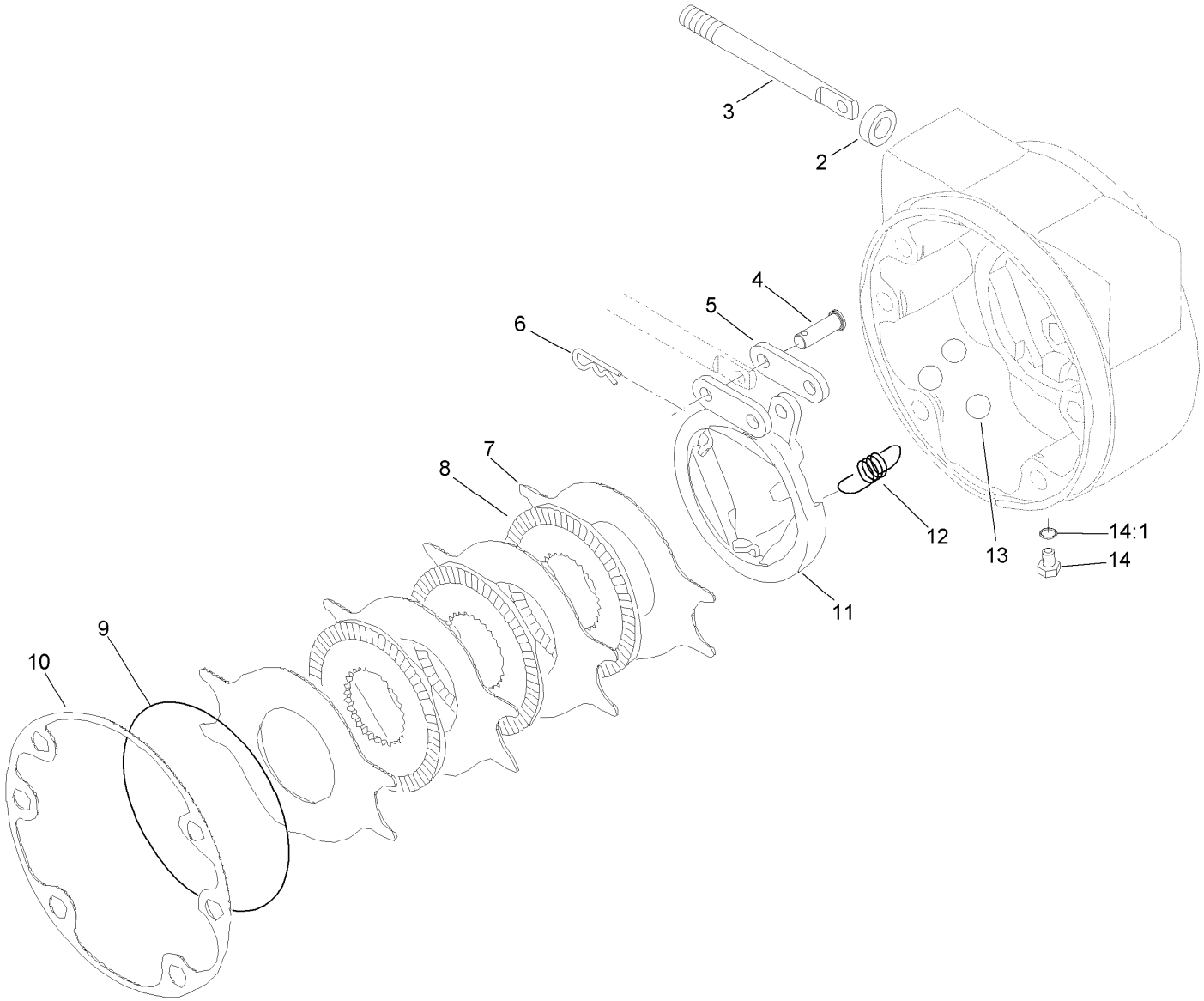


# Brake Assembly No. 100-3069-03

| Ref. | Part Number | Qty. | Description |
|---|---|---|---|
| 2 | 93-7977 | 1 | Seal |
| 3 | 93-7978 | 1 | Rod-Pull |
| 4 | 93-7983 | 2 | Pin-Clevis |
| 5 | 93-7980 | 2 | Link |
| 6 | 93-7979 | 2 | Pin-Hitch |
| 7 | 93-7986 | 4 | Disc-Stationary |
| 8 | 104-4278 | 3 | Disc-Rotating |
| 9 | 93-7976 | 1 | Ring-Retaining |
| 10 | 93-7984 | 1 | Gasket |
| 11 | 104-4280 | 1 | Actuator-Rotating |
| 12 | 93-7987 | 3 | Spring-Extension |
| 13 | 93-7985 | 3 | Ball |
| 14 | 353-990 | 2 | Plug ASM |
| 14:1 | 237-78 | 1 | O-Ring |

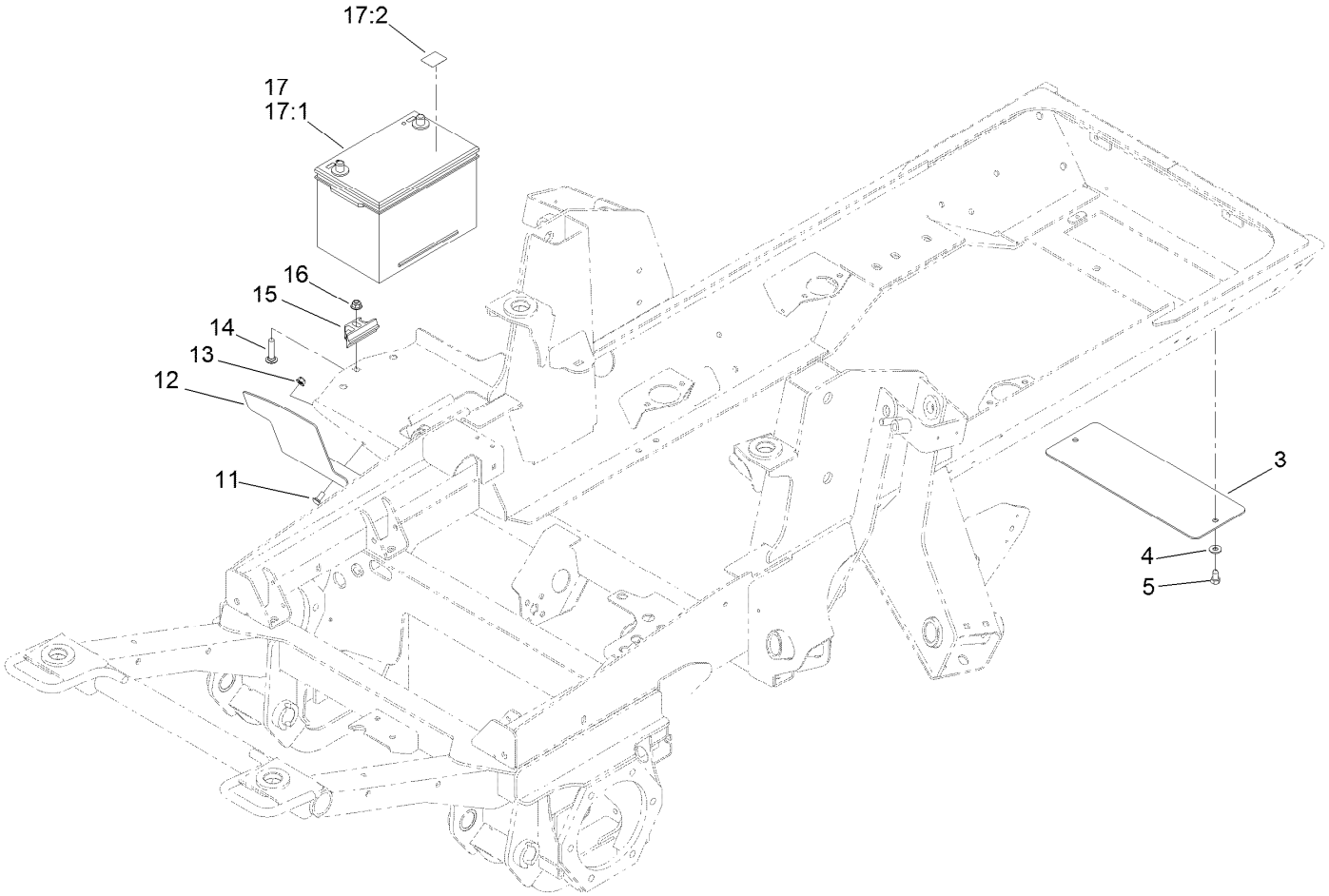


# Battery, Shield and Rear Cover Assembly

| *Ref.* | *Part Number* | *Qty.* | *Description* |
|---|---|---|---|
| 3 | 131-1246-03 | 1 | Plate-Cover |
| 4 | 3256-3 | 2 | Washer-Flat |
| 5 | 32104-6 | 2 | Screw-HH, TAP |
| 11 | 3230-23 | 2 | Screw-CARR |
| 12 | 121-1512-03 | 1 | Shield-Battery |
| 13 | 104-8300 | 2 | Nut-HF, NI |
| 14 | 3231-5 | 1 | Screw-CARR |
| 15 | 138-6335 | 1 | Retainer-Battery |
| 16 | 104-8301 | 1 | Nut-HF, NI |
| 17 | 139-1005 | 1 | Battery Kit |
| 17:1 | 127-7507 | 1 | Battery |
| 17:2 | 139-1006 | 1 | Decal |

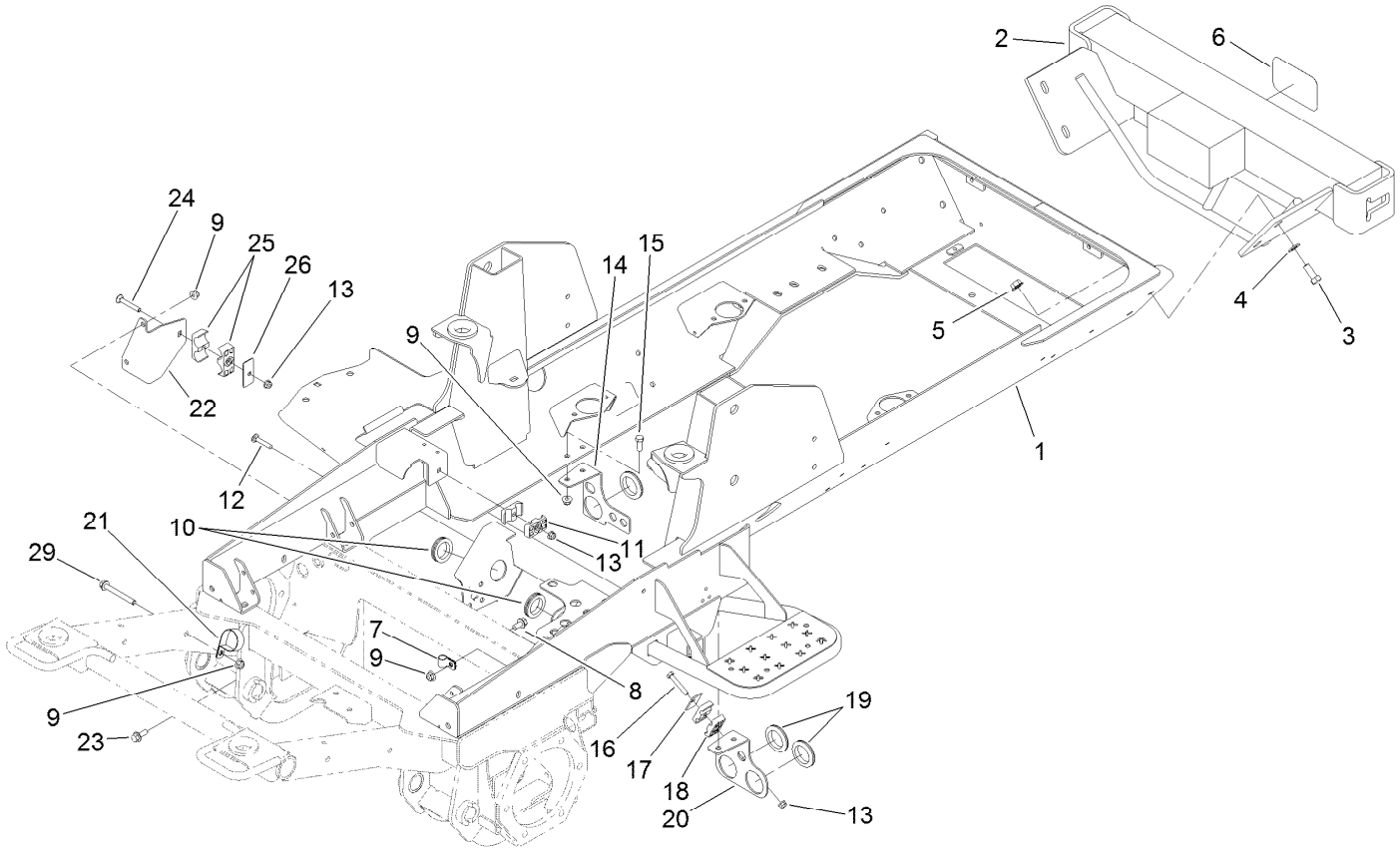


# Frame and Bumper Assembly

| Ref. | Part Number | Qty. | Description |
|---|---|---|---|
| 1 | 120-4110-03 | 1 | Frame |
| 2 | 106-4278-03 | 1 | Bumper |
| 3 | 325-5 | 4 | Screw-HH |
| 4 | 3256-26 | 4 | Washer-Flat |
| 5 | 32128-23 | 4 | Nut-HF |
| 6 | 105-8278 | 1 | Decal |
| 7 | 2412-138 | 1 | R-Clamp |
| 8 | 3234-1 | 1 | Screw-HHF |
| 9 | 104-8301 | 8 | Nut-HF, NI |
| 10 | 240-7 | 2 | Grommet-Rubber |
| 11 | 56-7971 | 2 | Clamp-Tube |
| 12 | 3230-5 | 1 | Bolt-CARR |
| 13 | 104-8300 | 3 | Nut-HF, NI |
| 14 | 121-1508-03 | 1 | Bracket-Bulkhead |

| Ref. | Part Number | Qty. | Description |
|---|---|---|---|
| 15 | 323-6 | 4 | Screw-HH |
| 16 | 322-10 | 1 | Screw-HH |
| 17 | 69-9760 | 1 | Plate-Cover |
| 18 | 56-7976 | 2 | Clamp-Tube |
| 19 | 240-2 | 3 | Grommet-Rubber |
| 20 | 121-1481-03 | 1 | Plate-Mount, Bulkhead (LH) |
| 21 | 2412-147 | 1 | Clamp-R |
| 22 | 120-9086-03 | 1 | Plate-Mount, Tube |
| 23 | 3234-11 | 2 | Screw-HHF |
| 24 | 3230-7 | 1 | Bolt-CARR |
| 25 | 56-7974 | 2 | Clamp-Tube |
| 26 | 69-9761 | 1 | Plate-Cover |
| 29 | 3234-41 | 1 | Screw-HHF |

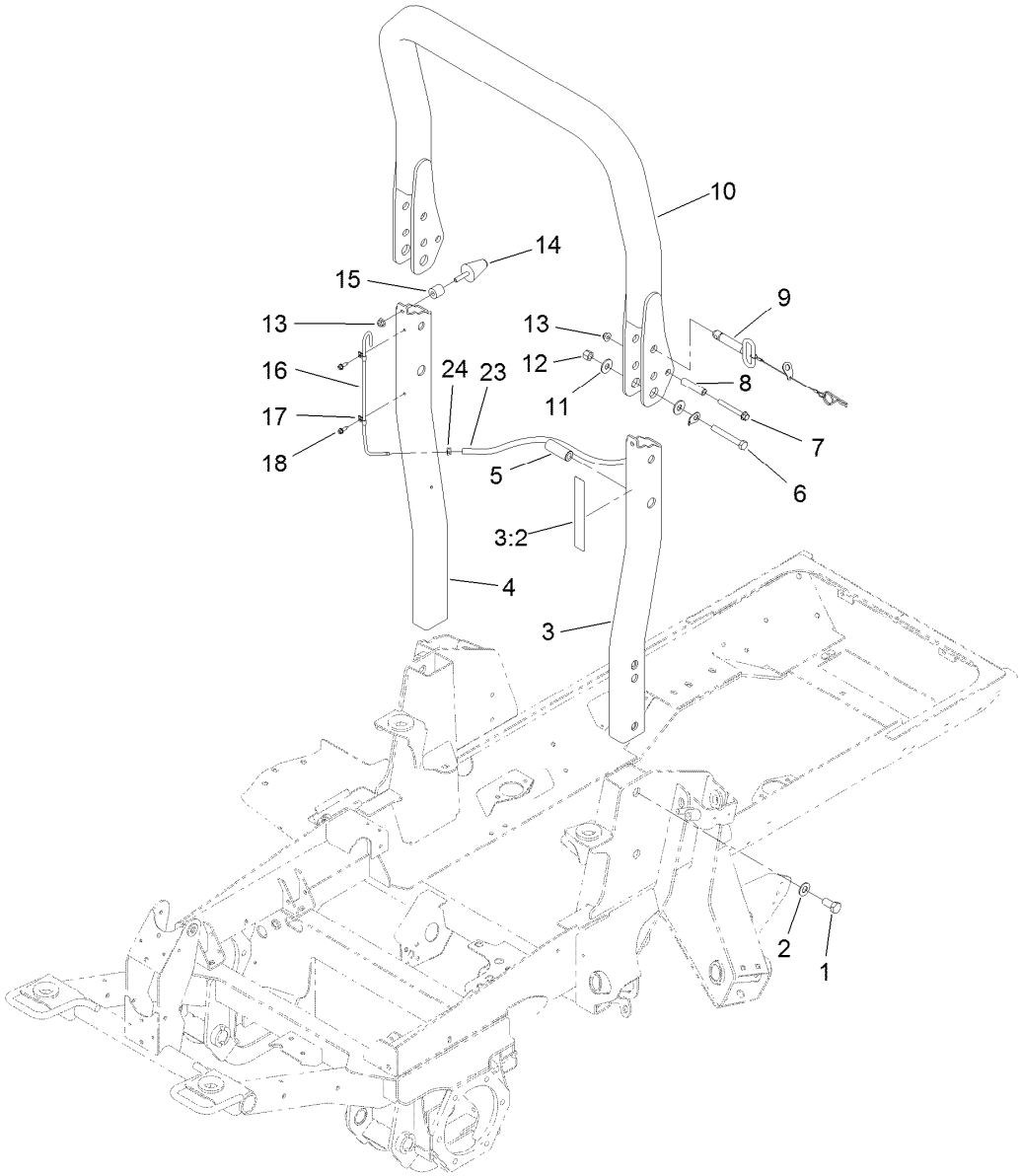


# ROPS Assembly

| Ref. | Part Number | Qty. | Description |
|---|---|---|---|
| 1 | 121-1658 | 4 | Screw-HH |
| 2 | 3256-27 | 4 | Washer-Flat |
| 3 | 121-1744 | 1 | Left ROPS ASM |
| 3:2 | 120-8947 | 1 | Decal-Danger, ROPS |
| 4 | 121-1632-03 | 1 | ROPS-Lower, RH |
| 5 | 121-1660 | 2 | Spacer |
| 6 | 325-35 | 2 | Screw-HH |
| 7 | 3234-41 | 2 | Screw-HHF |
| 8 | 106-0877 | 2 | Spacer-Shield |
| 9 | 121-1629 | 2 | ROPS Fold Pin ASM |
| 10 | 121-1642 | 1 | ROPS-Upper |

| Ref. | Part Number | Qty. | Description |
|---|---|---|---|
| 11 | 3256-6 | 4 | Washer-Flat |
| 12 | 3296-23 | 2 | Nut-Lock, NI |
| 13 | 104-8301 | 4 | Nut-HF, NI |
| 14 | 121-1604 | 2 | Bumper-Rubber |
| 15 | 61-2220 | 2 | Spacer |
| 16 | 121-1638 | 1 | Tube-Vent |
| 17 | 2412-72 | 2 | Clip-Closed, Insulated |
| 18 | 32104-95 | 2 | Screw-HWH |
| 23 | 110-5701 | 1 | Hose-Fuel |
| 24 | 2412-98 | 1 | Clamp-Hose |

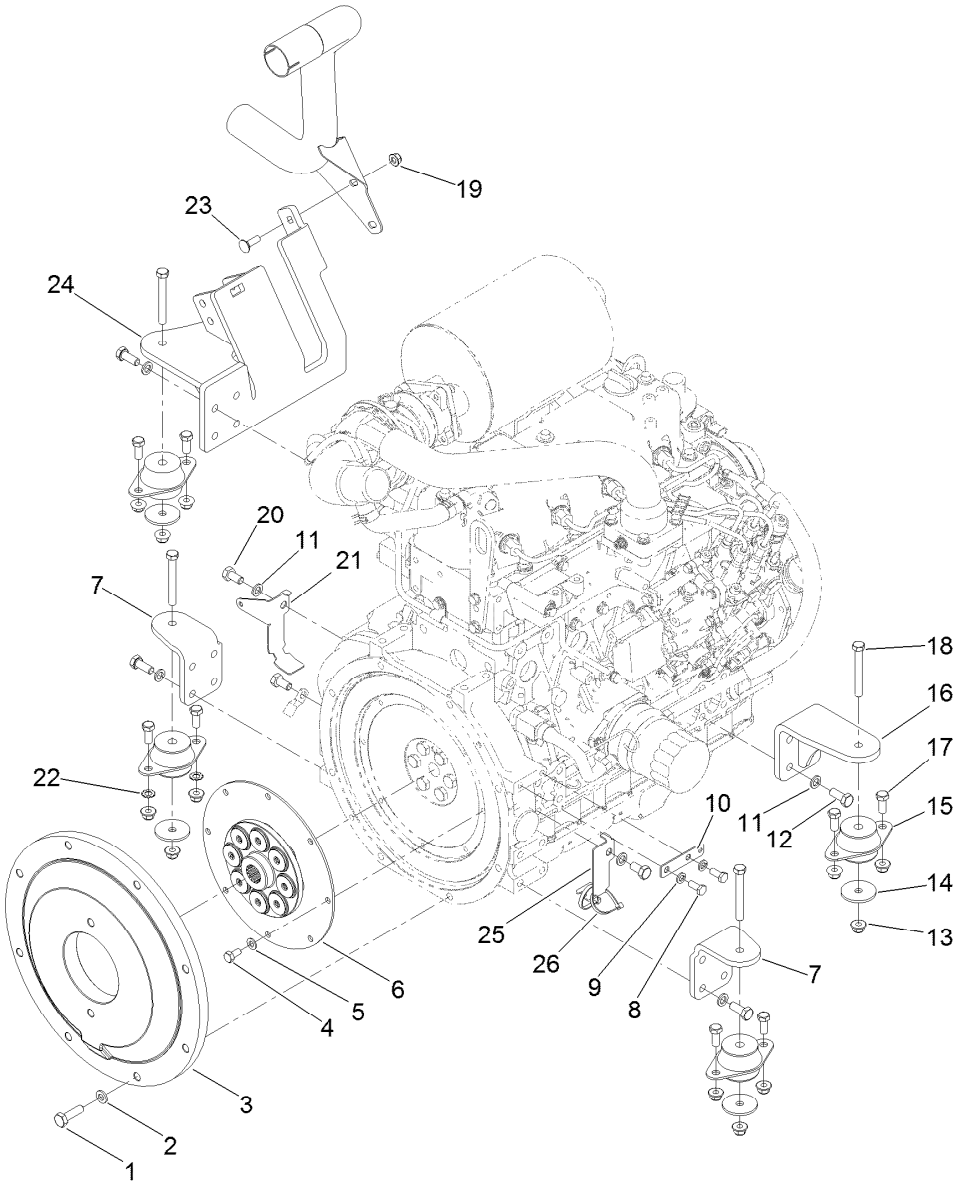


# Flywheel and Motor Mount Assembly

| Ref. | Part Number | Qty. | Description |
|---|---|---|---|
| 1 | 117-5663 | 8 | Screw-HH |
| 2 | 107-1413 | 8 | Washer-Hardened |
| 3 | 132-6120-03 | 1 | Plate-Flywheel |
| 4 | 99-5132 | 8 | Bolt |
| 5 | 87-7510 | 8 | Washer-Flat |
| 6 | 132-6121 | 1 | Coupling-Flywheel |
| 7 | 120-4066-03 | 2 | Mount-Motor, Front |
| 8 | 33114-020 | 2 | Screw-HH |
| 9 | 3253-4 | 2 | Washer-Lock |
| 10 | 121-5636 | 1 | Tab-Harness |
| 11 | 48-9590 | 18 | Washer-Lock |
| 12 | 33115-025 | 16 | Screw-HH |
| 13 | 104-8301 | 12 | Nut-HF, NI |

| Ref. | Part Number | Qty. | Description |
|---|---|---|---|
| 14 | 63-7400 | 4 | Washer-Rebound |
| 15 | 53-9682 | 4 | Mount-Engine |
| 16 | 120-4068-03 | 1 | Mount-Motor |
| 17 | 323-5 | 8 | Screw-HH |
| 18 | 323-14 | 4 | Screw-HH |
| 19 | 104-8300 | 2 | Nut-HF, NI |
| 20 | 33115-020 | 3 | Screw-HH |
| 21 | 139-0992 | 1 | Bracket-Harness, RH |
| 22 | 3255-9 | 2 | Washer-Lock |
| 23 | 3230-2 | 2 | Bolt-CARR |
| 24 | 127-3722-03 | 1 | Mount-Motor |
| 25 | 139-0993 | 1 | Bracket-Harness, LH |
| 26 | 3290-378 | 2 | Tie-Cable |

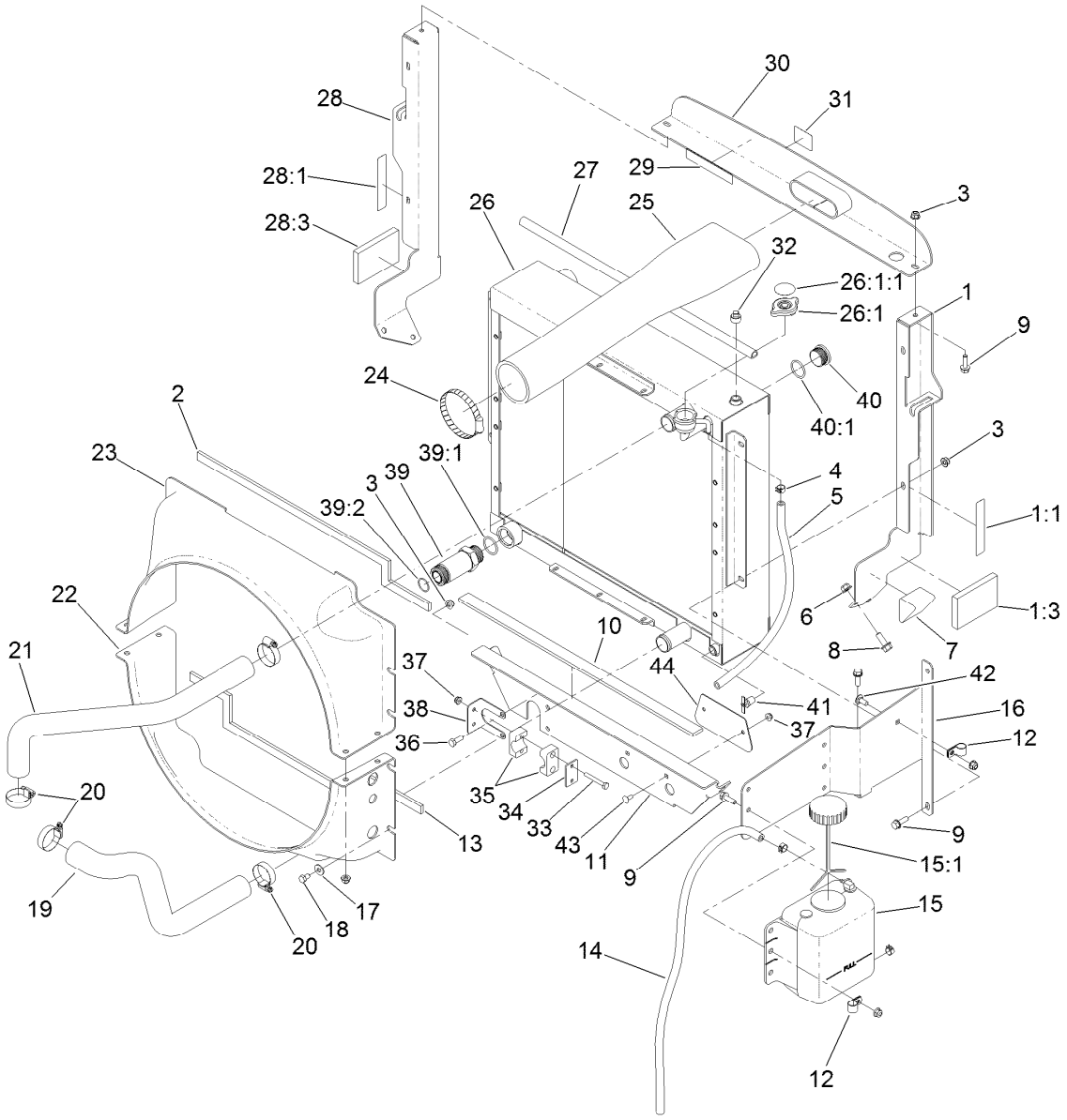


# Radiator Assembly

| Ref. | Part Number | Qty. | Description |
|---|---|---|---|
| 1 | 121-1479 | 1 | LH Radiator Support ASM |
| 1:1 | 93-7272 | 1 | Decal-Warning |
| 1:3 | 100-2196 | 1 | Pad-Foam |
| 2 | 121-1684 | 1 | Foam-Radiator |
| 3 | 104-8300 | 15 | Nut-HF, NI |
| 4 | 92-2379 | 3 | Clamp-Hose |
| 5 | 110-4112 | 1 | Hose-Fuel |
| 6 | 104-8301 | 6 | Nut-HF, NI |
| 7 | 93-5954 | 2 | Plug-Foam |
| 8 | 3234-11 | 6 | Screw-HHF |
| 9 | 3234-29 | 12 | Screw-HHF |
| 10 | 104-2226 | 1 | Strip-Foam |
| 11 | 139-0952-03 | 1 | Support-Radiator |
| 12 | 92-6064 | 2 | Clamp-R |
| 13 | 121-1685 | 1 | Foam-Radiator, Lower |
| 14 | 110-9662 | 1 | Hose-Fuel |
| 15 | 120-5571 | 1 | Coolant Reservoir ASM |
| 15:1 | 87-7050 | 1 | Cap-Reservoir |
| 16 | 130-0603-03 | 1 | Bracket-Mount, Bottle |
| 17 | 3256-3 | 8 | Washer-Flat |
| 18 | 322-1 | 8 | Screw-HH |

| Ref. | Part Number | Qty. | Description |
|---|---|---|---|
| 19 | 121-1746 | 1 | Hose-Radiator, Lower |
| 20 | 2412-111 | 4 | Clamp |
| 21 | 121-1747 | 1 | Hose-Radiator, Upper |
| 22 | 121-1517 | 1 | Shroud-Radiator, Lower |
| 23 | 121-1515 | 1 | Shroud-Radiator, Upper |
| 24 | 2412-110 | 1 | Clamp-Band/Screw |
| 25 | 121-1474 | 1 | Hose-Inlet, Air Cleaner |
| 26 | 132-6161 | 1 | Radiator/Oil Cooler |
| 26:1 | 115-7766 | 1 | Cap-Radiator |
| 26:1:1 | 106-6755 | 1 | Decal-Cap, Radiator |
| 27 | 114-3828 | 1 | Seal-Bulb |
| 28 | 121-1478 | 1 | RH Radiator Support ASM |
| 28:1 | 93-7272 | 1 | Decal-Warning |
| 28:3 | 100-2196 | 1 | Pad-Foam |
| 29 | 93-7272 | 1 | Decal-Warning |
| 30 | 136-4364-03 | 1 | Bracket-Intake |
| 31 | 117-4765 | 1 | Decal-Starting Fluid |
| 32 | 281-13 | 1 | Plug-Pipe |
| 33 | 321-11 | 2 | Screw-HH |
| 34 | 114-4902 | 1 | Plate-Cover |
| 35 | 114-4901 | 1 | Clamp |

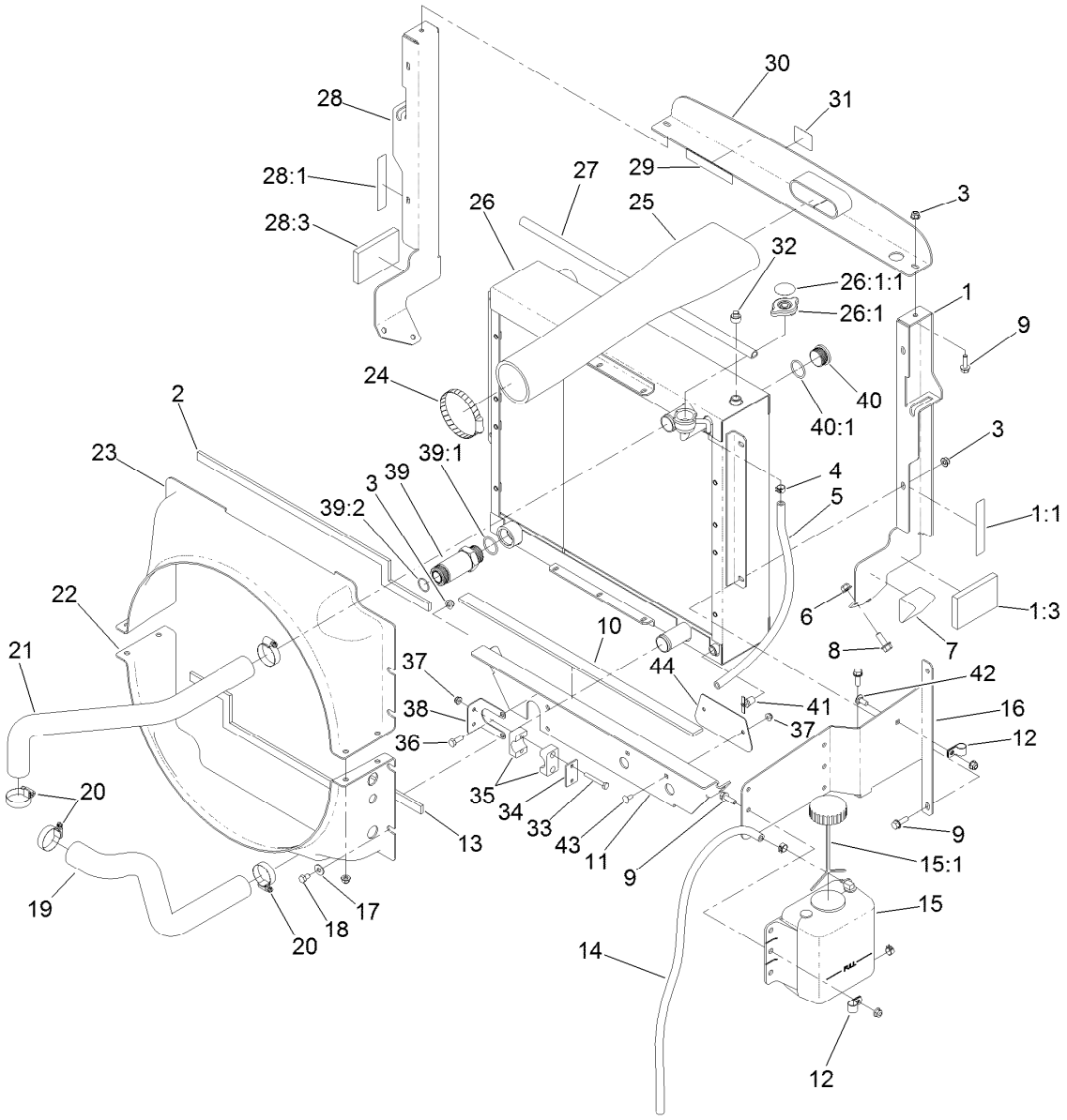


# Radiator Assembly (continued)

| Ref. | Part Number | Qty. | Description |
|---|---|---|---|
| 36 | 322-4 | 2 | Screw-HH |
| 37 | 104-7201 | 4 | Nut-HF |
| 38 | 120-8984 | 1 | Bracket-Clamp |
| 39 | 100-5565 | 1 | Fitting-STR |
| 39:1 | 237-146 | 1 | O-Ring |
| 39:2 | 340-65 | 1 | O-Ring |

| Ref. | Part Number | Qty. | Description |
|---|---|---|---|
| 40 | 106-2030 | 1 | Plug-Hex, Hollow |
| 40:1 | 237-146 | 1 | O-Ring |
| 41 | 304-46 | 1 | Draincock |
| 42 | 3230-23 | 1 | Screw-CARR |
| 43 | 3229-11 | 2 | Screw-CARR |
| 44 | 139-0989-03 | 1 | Plate |

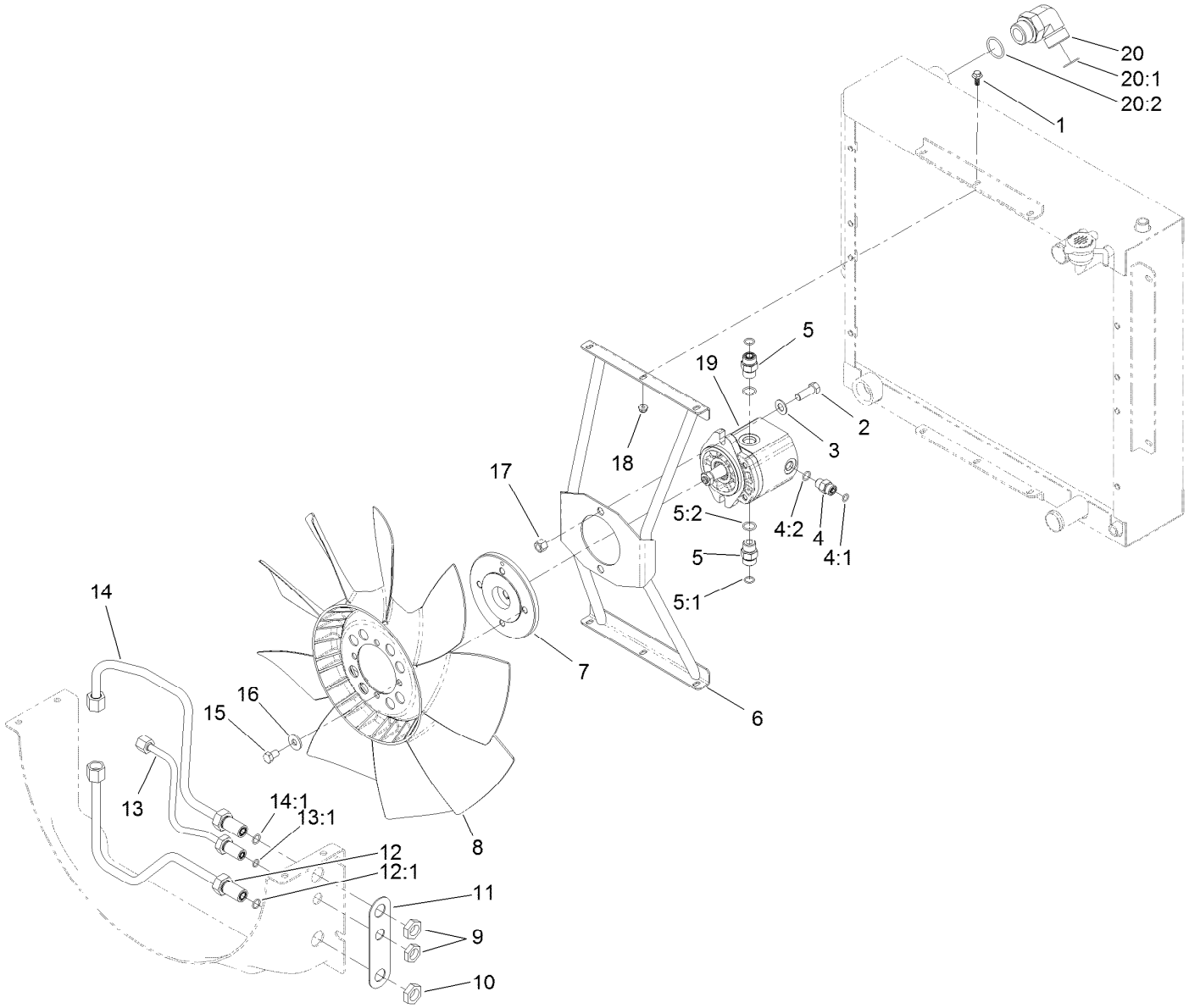


# Fan Mounting and Hardlines Assembly

| Ref. | Part Number | Qty. | Description |
|---|---|---|---|
| 1 | 99-6810 | 6 | Screw-HHF |
| 2 | 324-5 | 2 | Screw-HH |
| 3 | 3256-25 | 2 | Washer-Flat |
| 4 | 340-2 | 1 | Fitting-Straight |
| 4:1 | 237-22 | 1 | O-Ring |
| 4:2 | 237-42 | 1 | O-Ring |
| 5 | 340-4 | 2 | Fitting-Straight |
| 5:1 | 237-30 | 1 | O-Ring |
| 5:2 | 237-79 | 1 | O-Ring |
| 6 | 120-8935-03 | 1 | Bracket-Fan |
| 7 | 117-2364 | 1 | Hub-Fan |
| 8 | 114-3825 | 1 | Fan |
| 9 | 340-70 | 1 | Nut-Lock |
| 10 | 340-127 | 2 | Nut-Bulkhead |
| 11 | 121-1518 | 1 | Shim-Support |

| Ref. | Part Number | Qty. | Description |
|---|---|---|---|
| 12 | 121-1554 | 1 | Tube-HYD |
| 12:1 | 237-30 | 1 | O-Ring |
| 13 | 121-1555 | 1 | Tube ASM |
| 13:1 | 237-22 | 1 | O-Ring |
| 14 | 121-1553 | 1 | Tube-HYD |
| 14:1 | 237-30 | 1 | O-Ring |
| 15 | 115-8486 | 4 | Screw-HH |
| 16 | 80-6990 | 4 | Washer-Hardened |
| 17 | 3296-48 | 2 | Nut-Hex |
| 18 | 104-7201 | 6 | Nut-HF |
| 19 | 117-4769 | 1 | HYD Motor ASM |
| 20 | 340-129 | 1 | Fitting-Elbow, 90 DEG |
| 20:1 | 237-146 | 1 | O-Ring |
| 20:2 | 340-65 | 1 | O-Ring |

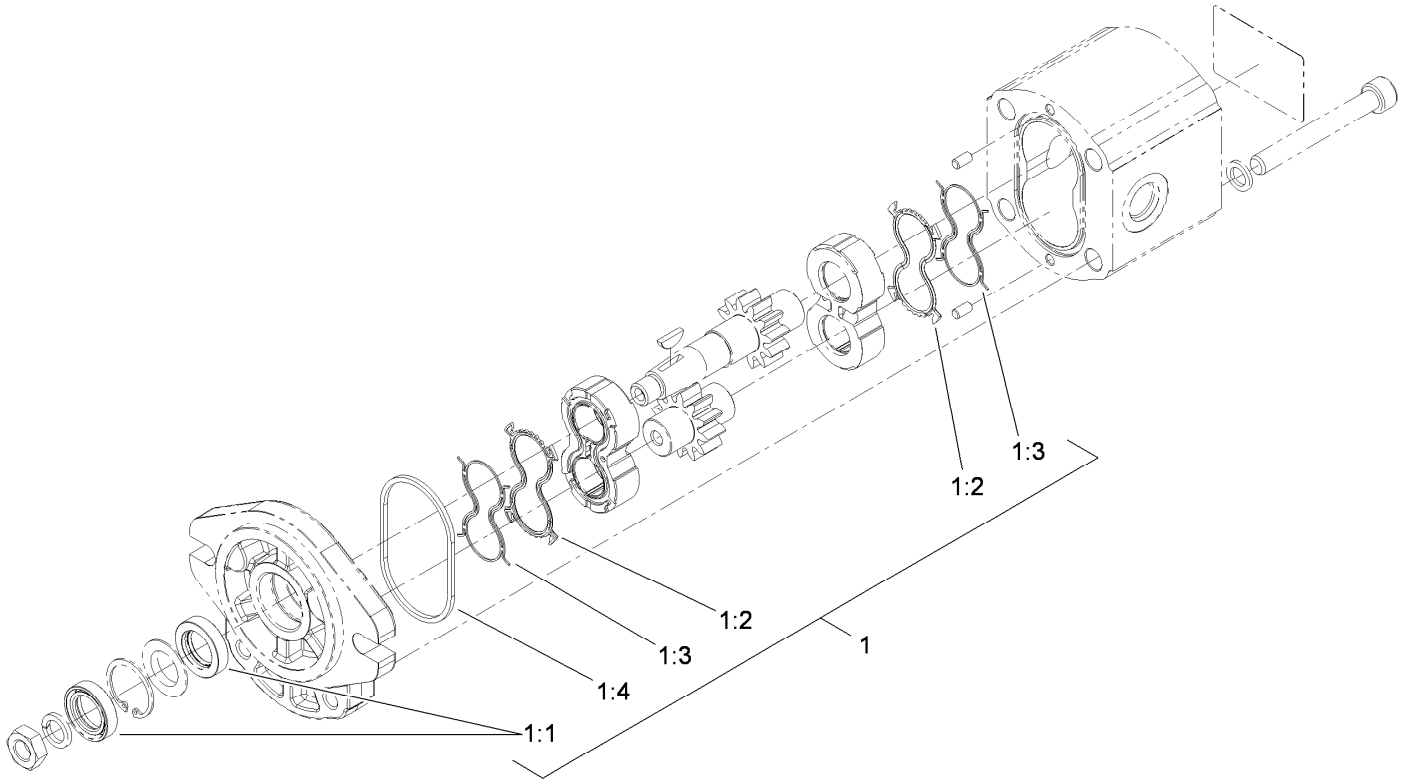


# Hydraulic Motor Assembly No. 117-4769

| *Ref.* | *Part Number* | *Qty.* | *Description* |
|---|---|---|---|
| 1 | 115-4110 | 1 | Seal Kit |
| 1:1 | | 2 | Seal-Shaft ● |
| 1:2 | | 2 | Seal-Plate, Balancing ● |
| 1:3 | | 2 | Seal-Anti Extrusion ● |
| 1:4 | | 2 | O-Ring (Housing) ● |

● Not serviced separately

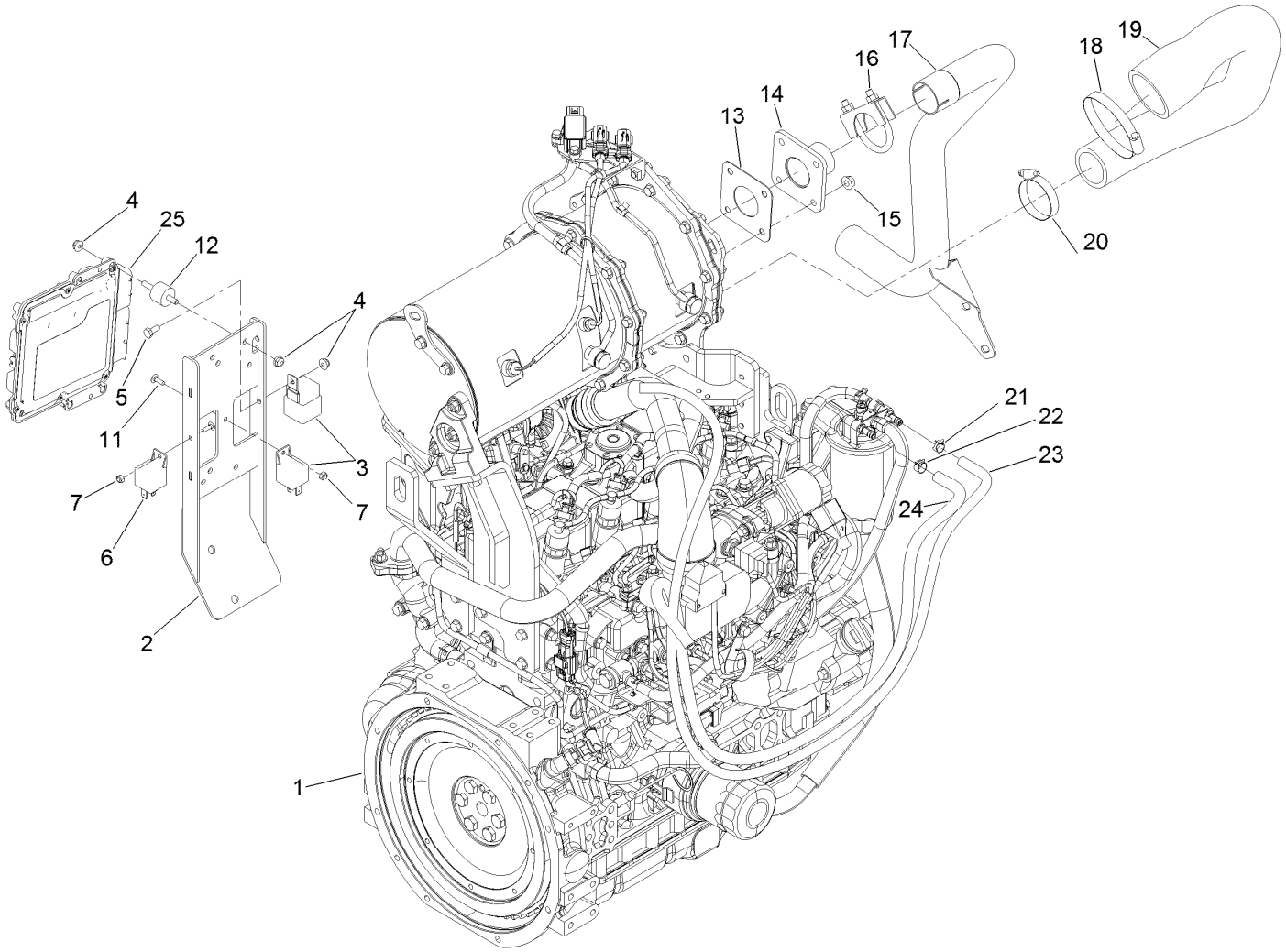


# Engine and Controller Assembly

| Ref. | Part Number | Qty. | Description |
|---|---|---|---|
| 1 | 138-6917 | 1 | Engine-Yanmar |
| 2 | 136-4430-03 | 1 | Mount-Controller |
| 3 | 99-7430 | 1 | Relay-Mini |
| 4 | 104-7201 | 9 | Nut-HF |
| 5 | 321-3 | 1 | Screw-HH |
| 6 | 99-7435 | 2 | Relay |
| 7 | 3296-2 | 2 | Nut-Lock, NI |
| 11 | 1-807533 | 2 | Bolt-CARR |
| 12 | 132-1356 | 4 | Mount-Isolator |
| 13 | 121-3058 | 1 | Gasket-Exhaust |
| 14 | 121-3060 | 1 | Flange-Exhaust |

| Ref. | Part Number | Qty. | Description |
|---|---|---|---|
| 15 | 33004-00 | 4 | Nut-HF |
| 16 | 18-2130 | 1 | Clamp |
| 17 | 121-1613 | 1 | Pipe-Exhaust |
| 18 | 2412-110 | 1 | Clamp-Band/Screw |
| 19 | 121-1475 | 1 | Hose-Outlet, Air Cleaner |
| 20 | 2412-130 | 1 | Clamp-Hose |
| 21 | 2412-98 | 1 | Clamp-Hose |
| 22 | 92-2379 | 1 | Clamp-Hose |
| 23 | 115-2368 | 1 | Hose-Fuel |
| 24 | 110-4007 | 1 | Hose-Fuel |
| 25 | 121-5592 | 1 | Electronic Control Unit |

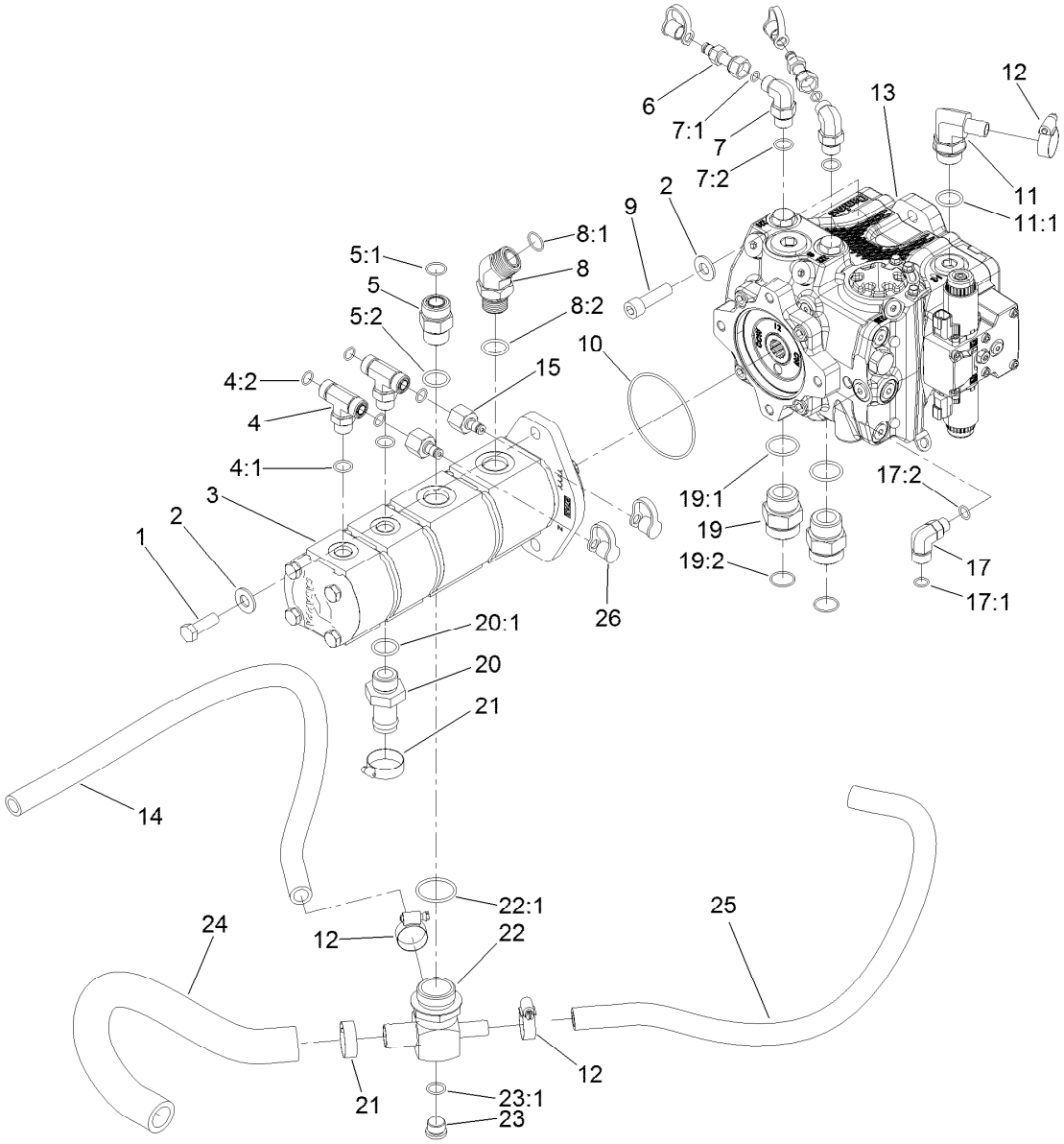


# Piston Pump and Gear Pump Assembly

| Ref. | Part Number | Qty. | Description |
|---|---|---|---|
| 1 | 121-1525 | 2 | Screw-HH |
| 2 | 137-5550 | 4 | Washer-Thrust |
| 3 | 120-8906 | 1 | Pump-Gear, 4-Section |
| 4 | 340-157 | 2 | Fitting-HYD, Tee |
| 4:1 | 237-79 | 1 | O-Ring |
| 4:2 | 237-30 | 2 | O-Ring |
| 5 | 340-9 | 1 | Fitting-STR |
| 5:1 | 237-58 | 1 | O-Ring |
| 5:2 | 237-81 | 1 | O-Ring |
| 6 | 86-5480 | 2 | Nipple-Test |
| 7 | 340-18 | 2 | Fitting-HYD, 90 DEG |
| 7:1 | 237-79 | 1 | O-Ring |
| 7:2 | 237-22 | 1 | O-Ring |
| 8 | 100-5530 | 1 | Fitting-45 DEG |
| 8:1 | 237-58 | 1 | O-Ring |
| 8:2 | 237-81 | 1 | O-Ring |
| 9 | 131-0661 | 2 | Screw-HSH |
| 10 | 107-9447 | 1 | O-Ring |
| 11 | 136-4439 | 1 | Fitting-HYD, 90 |
| 11:1 | 237-81 | 1 | O-Ring |

| Ref. | Part Number | Qty. | Description |
|---|---|---|---|
| 12 | 2412-129 | 3 | Clamp-Hose |
| 13 | 132-6100 | 1 | Pump-Piston |
| 14 | 121-1647 | 1 | Hose-HYD |
| 15 | 100-5616 | 2 | Fitting |
| 17 | 340-99 | 1 | Fitting-HYD, 90 DEG |
| 17:1 | 237-30 | 1 | O-Ring |
| 17:2 | 237-42 | 1 | O-Ring |
| 19 | 104-3797 | 2 | Fitting-Straight |
| 19:1 | 237-146 | 1 | O-Ring |
| 19:2 | 340-65 | 1 | O-Ring |
| 20 | 99-3017 | 1 | Fitting |
| 20:1 | 237-81 | 1 | O-Ring |
| 21 | 2412-34 | 2 | Clamp-Hose |
| 22 | 121-1682 | 1 | Fitting-Tee |
| 22:1 | 237-101 | 1 | O-Ring |
| 23 | 353-988 | 1 | Plug-Hex |
| 23:1 | 237-79 | 1 | O-Ring |
| 24 | 120-8815 | 1 | Hose-Suction |
| 25 | 120-9050 | 1 | Hose-HYD |
| 26 | 354-79 | 4 | Cap-Dust |

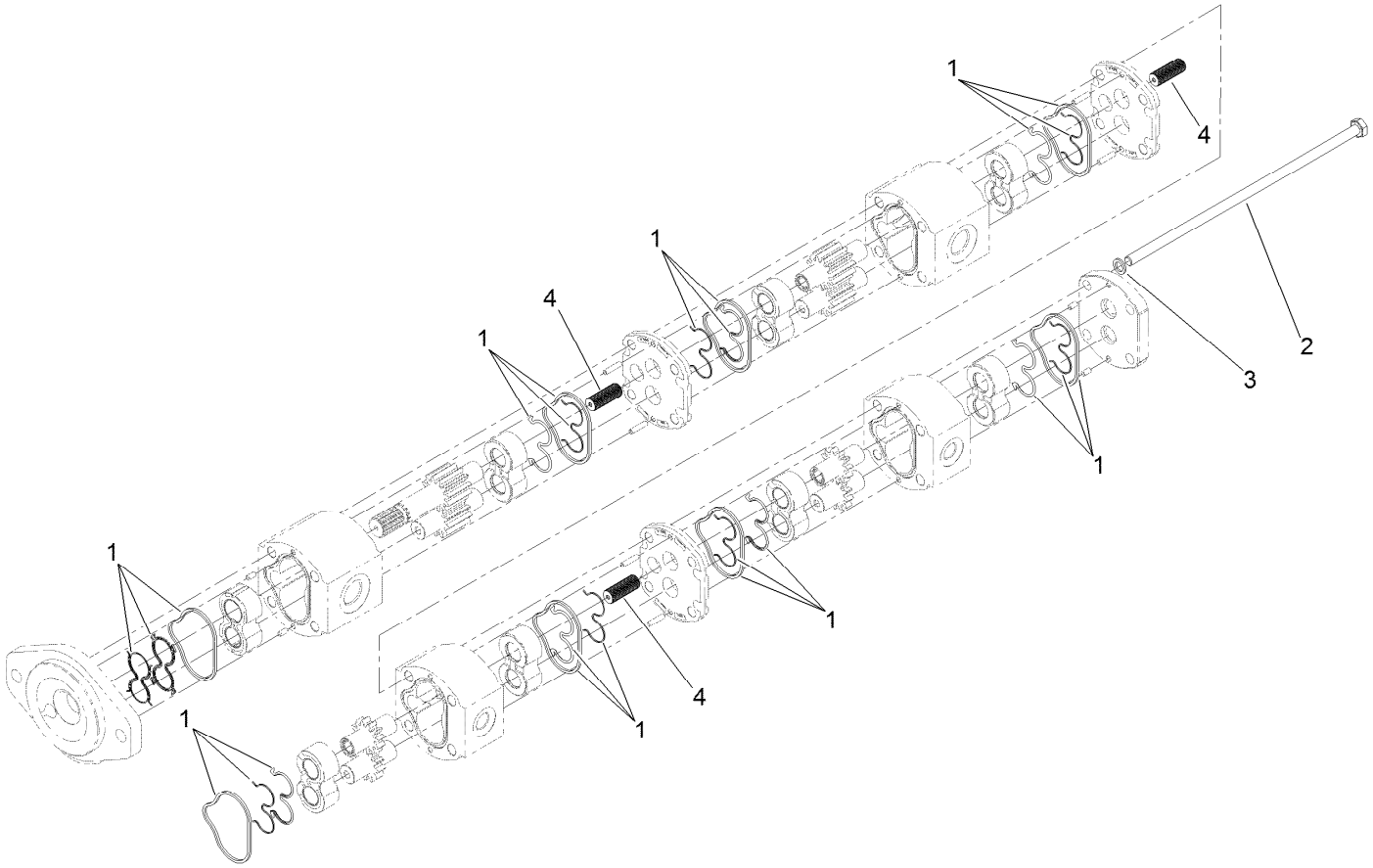


# Four-Section Gear Pump Assembly No. 120-8906

| *Ref.* | *Part Number* | *Qty.* | *Description* |
|---|---|---|---|
| 1 | 115-3776 | 1 | Seal Kit |
| 2 | 115-3775 | 4 | Bolt |
| 3 | 121-1722 | 4 | Washer |
| 4 | 120-6284 | 3 | Hub-Connecting |

# Hydraulic Pump Assembly No. 132-6100

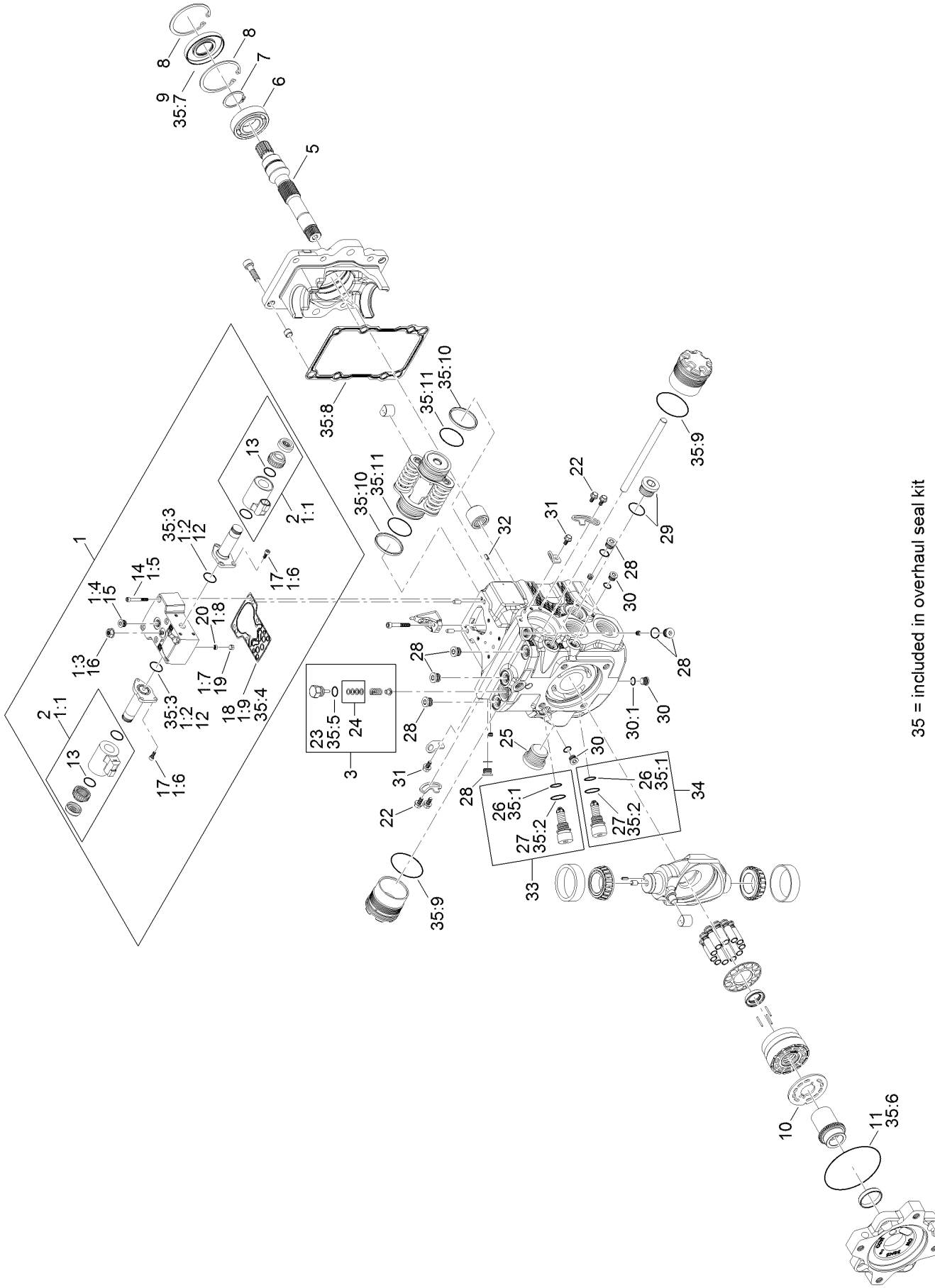


35 = included in overhaul seal kit

# Hydraulic Pump Assembly No. 132-6100 (continued)

| Ref. | Part Number | Qty. | Description |
|---|---|---|---|
| 1 | 132-6203 | 1 | Control Kit |
| 1:1 | 132-6204 | 2 | Coil Kit |
| 1:2 | 125-5288 | 2 | O-Ring |
| 1:3 | 125-5273 | 1 | Nut-Seal |
| 1:4 | 125-5302 | 1 | Plug |
| 1:5 | 125-5274 | 6 | Screw |
| 1:6 | 125-5272 | 6 | Screw |
| 1:7 | 125-5269 | 1 | Ring-Locking |
| 1:8 | 125-5266 | 1 | Screen |
| 1:9 | 125-5283 | 1 | Gasket-Control |
| 2 | 132-6204 | 2 | Coil Kit |
| 3 | 136-4397 | 1 | Charge Relief Kit |
| 5 | 136-4399 | 1 | Shaft |
| 6 | 75-0460 | 1 | Bearing-Ball |
| 7 | 125-5280 | 1 | Ring-Retaining |
| 8 | 131-8616 | 2 | Ring-Retaining |
| 9 | 127-6214 | 1 | Seal-Lip |
| 10 | 136-4398 | 1 | Valve Plate |
| 11 | 132-6206 | 1 | O-Ring |
| 12 | 125-5288 | 2 | O-Ring |
| 13 | 131-7388 | 2 | O-Ring |
| 14 | 125-5274 | 6 | Screw |
| 15 | 125-5302 | 1 | Plug |
| 16 | 125-5273 | 1 | Nut-Seal |
| 17 | 125-5272 | 6 | Screw |
| 18 | 125-5283 | 1 | Gasket-Control |
| 19 | 125-5269 | 1 | Ring-Locking |
| 20 | 125-5266 | 1 | Screen |

| Ref. | Part Number | Qty. | Description |
|---|---|---|---|
| 21 | 125-5282 | 4 | Screw |
| 22 | 125-5270 | 4 | Screw |
| 23 | 125-5298 | 1 | O-Ring |
| 24 | 92-1353 | 1 | Shim Kit |
| 25 | 125-5301 | 1 | Plug |
| 26 | 75-0240 | 2 | O-Ring |
| 27 | 84-0560 | 2 | O-Ring |
| 28 | 69-3080 | 6 | Plug |
| 29 | 69-3130 | 1 | Plug |
| 30 | 75-0170 | 3 | Plug-Thread, Straight |
| 30:1 | 92-8777 | 1 | O-Ring |
| 31 | 125-5270 | 2 | Screw |
| 32 | 110-6485 | 1 | Pin-Slotted |
| 33 | 136-4393 | 1 | Valve-Relief, High Pressure |
| 34 | 136-4392 | 1 | Valve-Relief, High Pressure |
| 35 | 132-6205 | 1 | Overhaul Seal Kit |
| 35:1 | 75-0240 | 2 | O-Ring |
| 35:2 | 84-0560 | 2 | O-Ring |
| 35:3 | 125-5288 | 2 | O-Ring |
| 35:4 | 125-5283 | 1 | Gasket-Control |
| 35:5 | 125-5298 | 1 | O-Ring |
| 35:6 | 132-6206 | 1 | O-Ring |
| 35:7 | 127-6214 | 1 | Seal-Lip |
| 35:8 | | 1 | Gasket ● |
| 35:9 | | 2 | O-Ring ● |
| 35:10 | | 2 | Piston Ring ● |
| 35:11 | | 2 | O-Ring ● |

● Not serviced separately

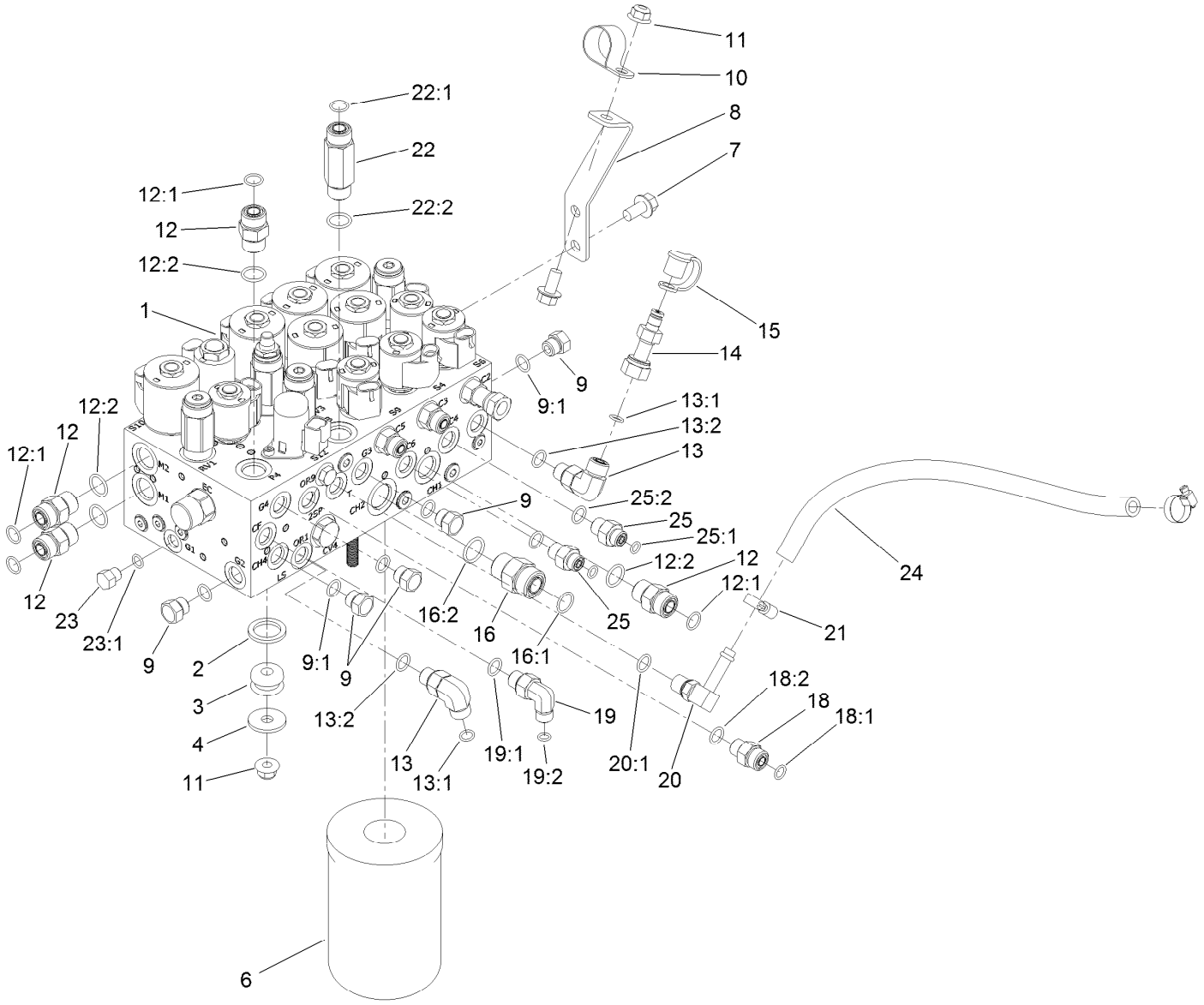


# Combination Manifold Assembly

| Ref. | Part Number | Qty. | Description |
|---|---|---|---|
| 1 | 137-5581 | 1 | Combination Manifold ASM |
| 2 | 92-2650 | 3 | Spacer-Clutch |
| 3 | 63-9750 | 3 | Mount |
| 4 | 63-8410 | 3 | Washer |
| 6 | 75-1310 | 1 | Filter-HYD |
| 7 | 3234-1 | 3 | Screw-HHF |
| 8 | 121-1542 | 1 | Plate-Mount, Hose |
| 9 | 353-508 | 5 | Plug-HH |
| 9:1 | 237-42 | 1 | O-Ring |
| 10 | 2412-126 | 1 | R-Clamp |
| 11 | 104-8301 | 4 | Nut-HF, NI |
| 12 | 340-4 | 4 | Fitting-Straight |
| 12:1 | 237-30 | 1 | O-Ring |
| 12:2 | 237-79 | 1 | O-Ring |
| 13 | 340-77 | 2 | Fitting-Elbow, 90 DEG |
| 13:1 | 237-22 | 1 | O-Ring |
| 13:2 | 237-42 | 1 | O-Ring |
| 14 | 86-5480 | 1 | Nipple-Test |
| 15 | 354-79 | 1 | Cap-Dust |
| 16 | 340-7 | 1 | Fitting-Straight |
| 16:1 | 237-65 | 1 | O-Ring |

| Ref. | Part Number | Qty. | Description |
|---|---|---|---|
| 16:2 | 237-80 | 1 | O-Ring |
| 18 | 340-2 | 1 | Fitting-Straight |
| 18:1 | 237-22 | 1 | O-Ring |
| 18:2 | 237-42 | 1 | O-Ring |
| 19 | 340-82 | 1 | Fitting-Elbow, 90 DEG |
| 19:1 | 237-42 | 1 | O-Ring |
| 19:2 | 237-21 | 1 | O-Ring |
| 20 | 100-4887 | 1 | Fitting-Elbow, 90 |
| 20:1 | 237-42 | 1 | O-Ring |
| 21 | 2412-36 | 2 | Clamp-Hose |
| 22 | 119-4854 | 1 | Fitting-STR |
| 22:1 | 237-30 | 1 | O-Ring |
| 22:2 | 237-79 | 1 | O-Ring |
| 23 | 353-512 | 1 | Plug |
| 23:1 | 237-78 | 1 | O-Ring |
| 24 | 87-5730 | 1 | Hose |
| 25 | 340-1 | 2 | Fitting-Straight |
| 25:1 | 237-21 | 1 | O-Ring |
| 25:2 | 237-42 | 1 | O-Ring |

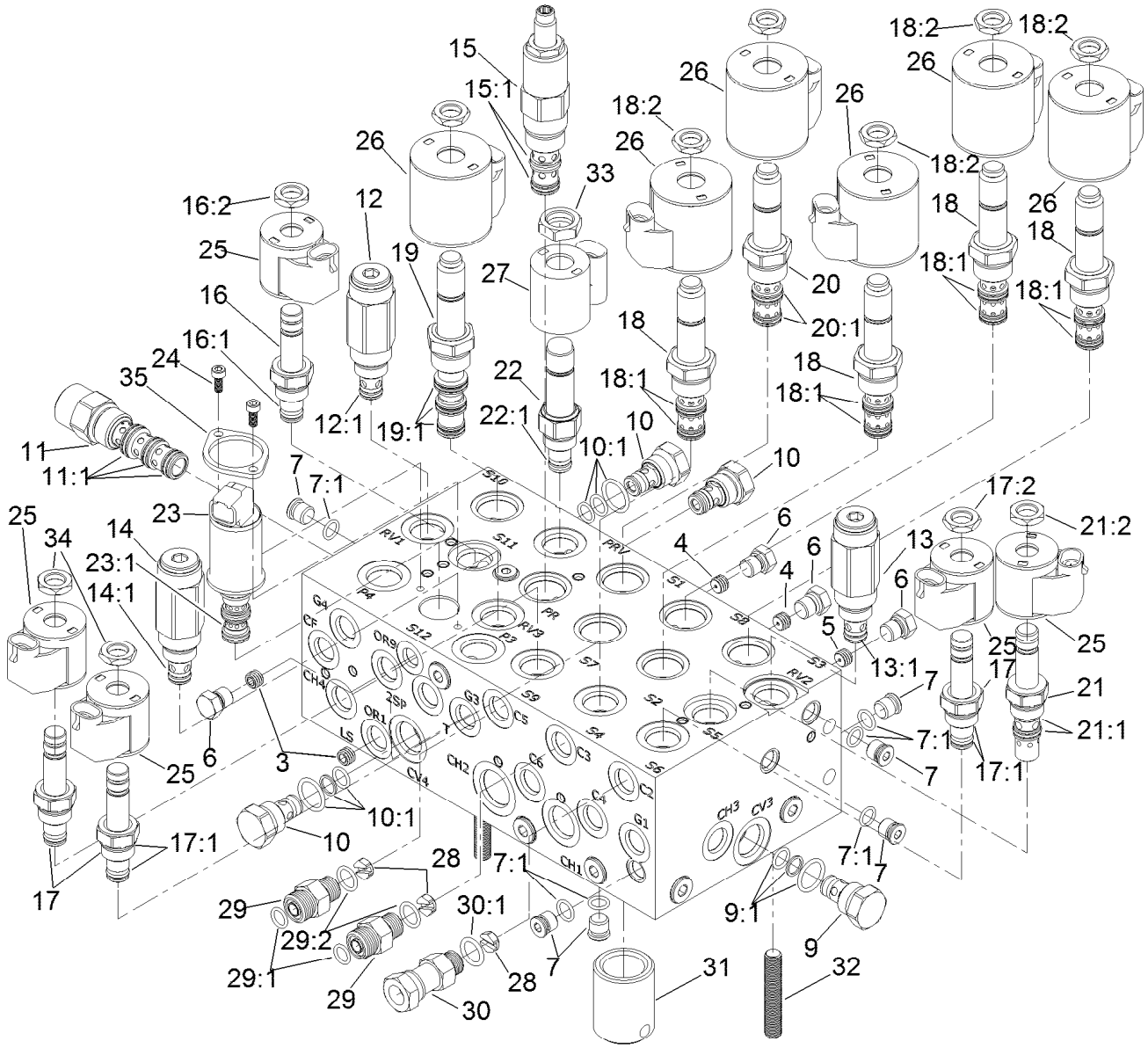


# Combination Manifold Assembly No. 137-5581

| Ref. | Part Number | Qty. | Description |
|---|---|---|---|
| 3 | 136-4363 | 2 | Orifice-0.028 |
| 4 | 112-6538 | 2 | Orifice (.063 Inch) |
| 5 | 110-8883 | 1 | Plug-Orifice (0.040) |
| 6 | 117-0115 | 4 | Plug |
| 7 | 353-990 | 14 | Plug ASM |
| 7:1 | 237-78 | 1 | O-Ring |
| 9 | 114-2873 | 1 | Check Valve ASM |
| 9:1 | 105-9156 | 1 | Seal Kit |
| 10 | 105-9321 | 3 | Check Valve ASM |
| 10:1 | 105-9156 | 1 | Seal Kit |
| 11 | 115-5409 | 1 | Compensator ASM |
| 11:1 | 110-8908 | 1 | Spool Valve Seal Kit |
| 12 | 125-7560 | 1 | Relief Valve ASM |
| 12:1 | 105-9156 | 1 | Seal Kit |
| 13 | 125-7559 | 1 | Relief Valve ASM |
| 13:1 | 105-9156 | 1 | Seal Kit |
| 14 | 125-7558 | 1 | Relief Valve ASM |
| 14:1 | 105-9156 | 1 | Seal Kit |
| 15 | 127-3663 | 1 | Valve-Pressure Reducing |
| 15:1 | 105-9154 | 1 | Seal Kit |
| 16 | 107-7516 | 1 | Solenoid Valve ASM |

| Ref. | Part Number | Qty. | Description |
|---|---|---|---|
| 16:1 | 105-9156 | 1 | Seal Kit |
| 16:2 | 110-2634 | 1 | Nut-Coil |
| 17 | 112-9206 | 3 | Solenoid Valve ASM |
| 17:1 | 105-9156 | 1 | Seal Kit |
| 17:2 | 110-2634 | 1 | Nut-Coil |
| 18 | 115-5400 | 4 | Solenoid Valve ASM |
| 18:1 | 107-7813 | 1 | Seal Kit |
| 18:2 | 110-2634 | 1 | Nut-Coil |
| 19 | 115-3023 | 1 | Solenoid Valve ASM |
| 19:1 | 110-8908 | 1 | Spool Valve Seal Kit |
| 20 | 125-7556 | 1 | Solenoid Valve ASM |
| 20:1 | 107-7813 | 1 | Seal Kit |
| 21 | 115-5405 | 1 | Solenoid Valve ASM |
| 21:1 | 115-5413 | 1 | Seal Kit |
| 21:2 | 110-2634 | 1 | Nut-Coil |
| 22 | 125-7555 | 1 | Proportional Relief Valve ASM |
| 22:1 | 110-6316 | 1 | Seal Kit |
| 23 | 138-3828 | 1 | Valve-Solenoid, 3 Way 2 Position |
| 23:1 | 138-3831 | 1 | Seal Kit |

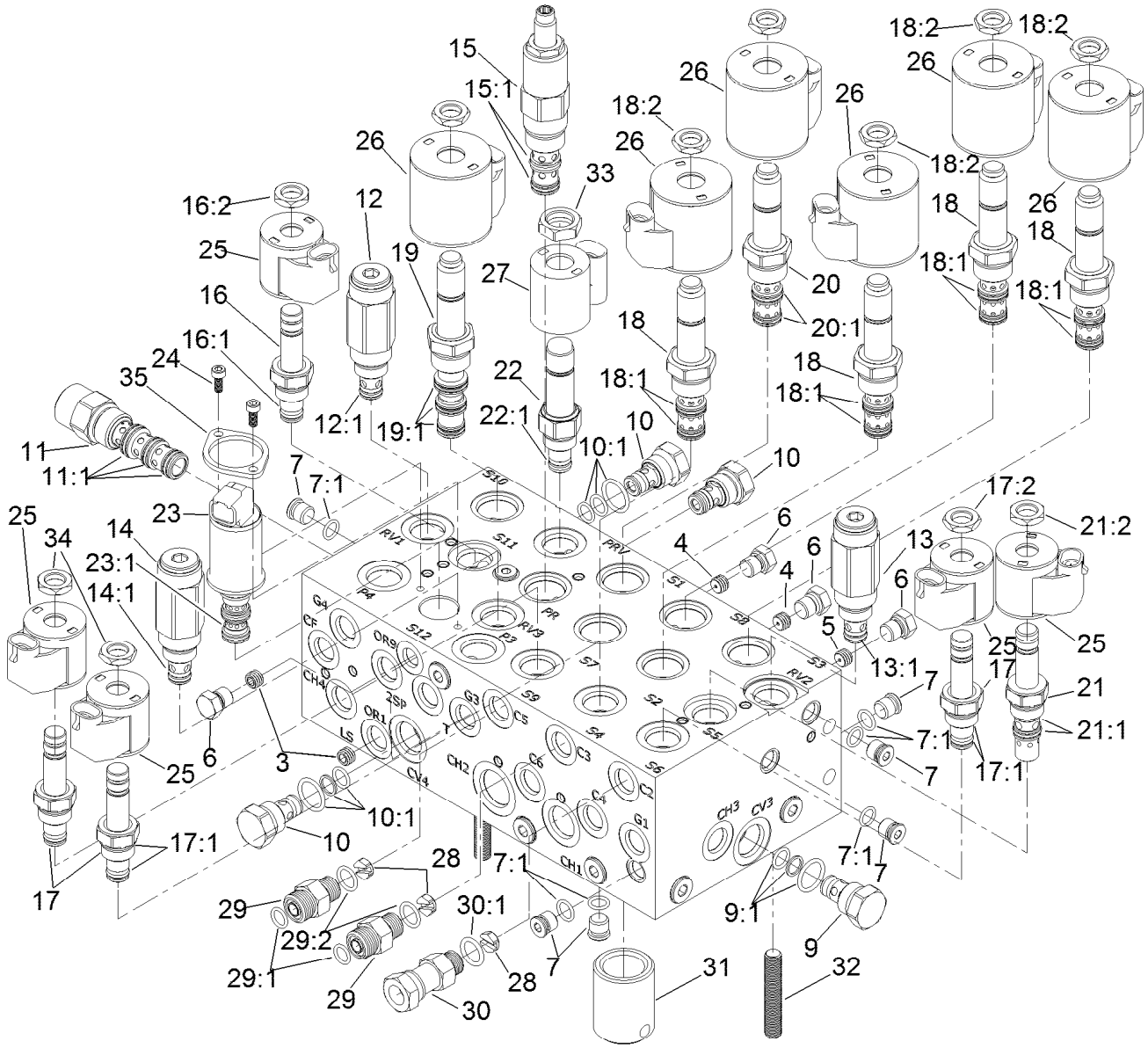


# Combination Manifold Assembly No. 137-5581 (continued)

| Ref. | Part Number | Qty. | Description |
|---|---|---|---|
| 24 | 138-3827 | 2 | Screw |
| 25 | 110-0497 | 5 | Coil-Solenoid |
| 26 | 110-6344 | 6 | Coil-12V, DC |
| 27 | 125-7553 | 1 | E-Coil, 12Vdc |
| 28 | 125-7552 | 3 | Orifice-Check, .070 DIA |
| 29 | 340-2 | 2 | Fitting-Straight |
| 29:1 | 237-22 | 1 | O-Ring |
| 29:2 | 237-42 | 1 | O-Ring |

| Ref. | Part Number | Qty. | Description |
|---|---|---|---|
| 30 | 104-3779 | 1 | Connector-Swivel, Straight |
| 30:1 | 237-42 | 1 | O-Ring |
| 31 | 125-7551 | 1 | Nipple-Filter |
| 32 | 130-2661 | 3 | Stud-Manifold |
| 33 | 125-7550 | 1 | Nut-Coil |
| 34 | 110-2634 | 11 | Nut-Coil |
| 35 | 138-3825 | 1 | Plate-Mounting, Standard |

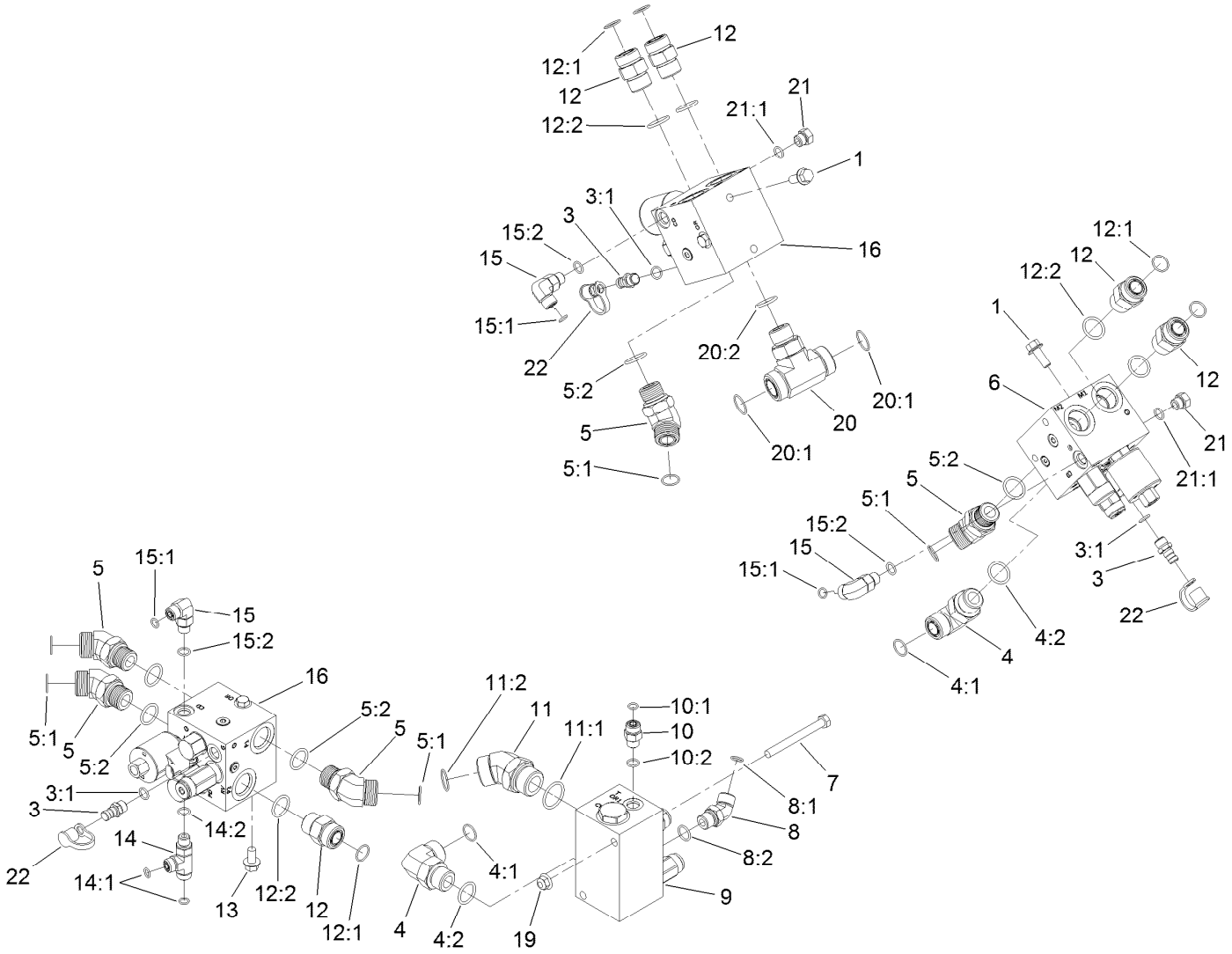


# Manifold Block Assembly

| Ref. | Part Number | Qty. | Description |
|---|---|---|---|
| 1 | 3234-11 | 4 | Screw-HHF |
| 3 | 59-7410 | 3 | Fitting-Diagnostic |
| 3:1 | 237-42 | 1 | O-Ring |
| 4 | 340-142 | 2 | Fitting-Elbow, 90 DEG |
| 4:1 | 237-58 | 1 | O-Ring |
| 4:2 | 237-81 | 1 | O-Ring |
| 5 | 100-5530 | 5 | Fitting-45 DEG |
| 5:1 | 237-58 | 1 | O-Ring |
| 5:2 | 237-81 | 1 | O-Ring |
| 6 | 131-1249 | 1 | Manifold-PTO, Left |
| 7 | 323-42 | 2 | Screw-HH |
| 8 | 340-101 | 1 | Fitting-HYD, 45 DEG |
| 8:1 | 237-30 | 1 | O-Ring |
| 8:2 | 237-79 | 1 | O-Ring |
| 9 | 121-1530 | 1 | Manifold-Traction, Rear |
| 10 | 340-2 | 1 | Fitting-Straight |
| 10:1 | 237-22 | 1 | O-Ring |
| 10:2 | 237-42 | 1 | O-Ring |
| 11 | 104-3509 | 1 | Fitting-HYD, 45 DEG |
| 11:1 | 237-146 | 1 | O-Ring |

| Ref. | Part Number | Qty. | Description |
|---|---|---|---|
| 11:2 | 340-65 | 1 | O-Ring |
| 12 | 340-9 | 5 | Fitting-STR |
| 12:1 | 237-58 | 1 | O-Ring |
| 12:2 | 237-81 | 1 | O-Ring |
| 13 | 3234-1 | 2 | Screw-HHF |
| 14 | 340-86 | 1 | Fitting-Tee |
| 14:1 | 237-22 | 2 | O-Ring |
| 14:2 | 237-42 | 1 | O-Ring |
| 15 | 340-77 | 3 | Fitting-Elbow, 90 DEG |
| 15:1 | 237-22 | 1 | O-Ring |
| 15:2 | 237-42 | 1 | O-Ring |
| 16 | 131-1248 | 2 | Center And Right PTO Manifold ASM |
| 19 | 104-8301 | 2 | Nut-HF, NI |
| 20 | 120-8825 | 1 | Fitting-Tee |
| 20:1 | 340-65 | 2 | O-Ring |
| 20:2 | 237-81 | 1 | O-Ring |
| 21 | 353-508 | 2 | Plug-HH |
| 21:1 | 237-42 | 1 | O-Ring |
| 22 | 354-79 | 3 | Cap-Dust |

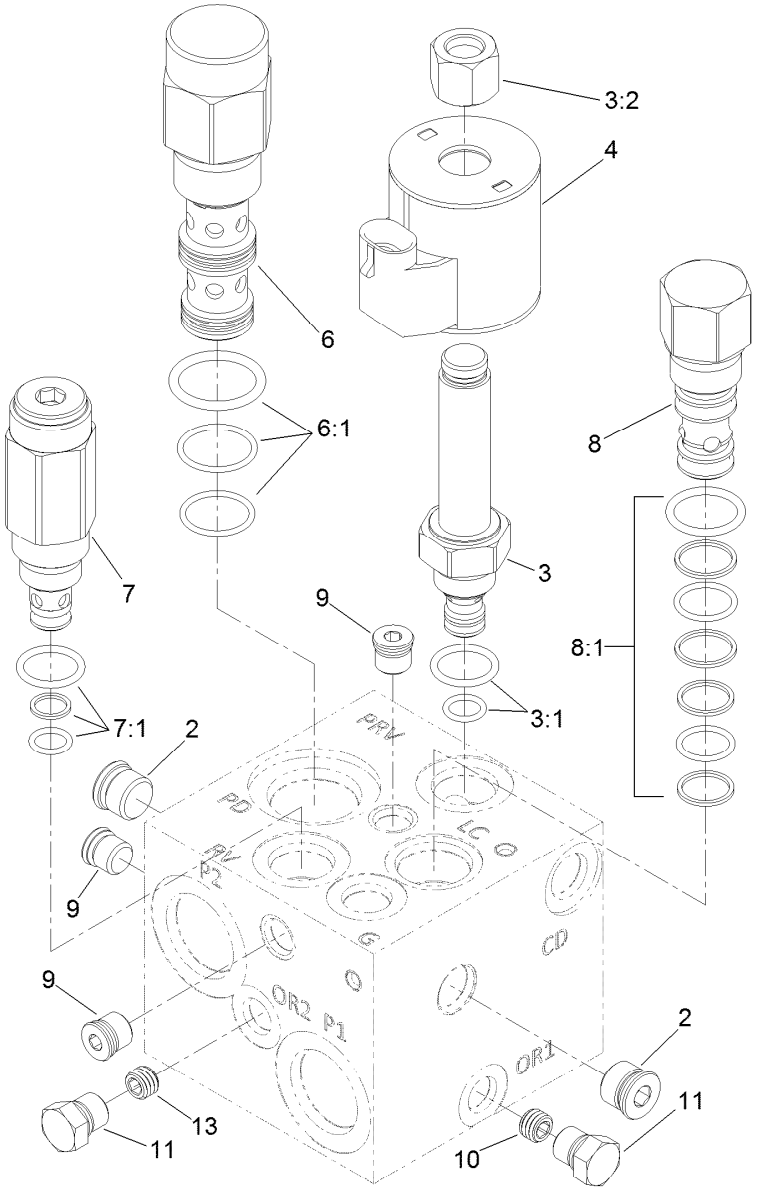


# Left PTO Manifold Assembly No. 131-1249

| *Ref.* | *Part Number* | *Qty.* | *Description* |
|---|---|---|---|
| 2 | 112-9213 | 2 | Plug |
| 3 | 117-0227 | 1 | Valve-Relief, Proportional |
| 3:1 | 105-9156 | 1 | Seal Kit |
| 3:2 | 130-8180 | 1 | Nut-Coil (9/16-24 Unef-2B) |
| 4 | 110-6344 | 1 | Coil-12V, DC |
| 6 | 125-4327 | 1 | Valve-Directional, Pilot |
| 6:1 | 114-5515 | 1 | Seal Kit |
| 7 | 114-5512 | 1 | Valve-Relief, 600 PSI |
| 7:1 | 105-9156 | 1 | Seal Kit |
| 8 | 105-9153 | 1 | Element-Logic, Vented |
| 8:1 | 119-2159 | 1 | Seal Kit |
| 9 | 112-9212 | 3 | Plug |
| 10 | 117-8315 | 1 | Orifice (.025 Inch) |
| 11 | 117-0115 | 2 | Plug |
| 13 | 112-6538 | 1 | Orifice (.063 Inch) |

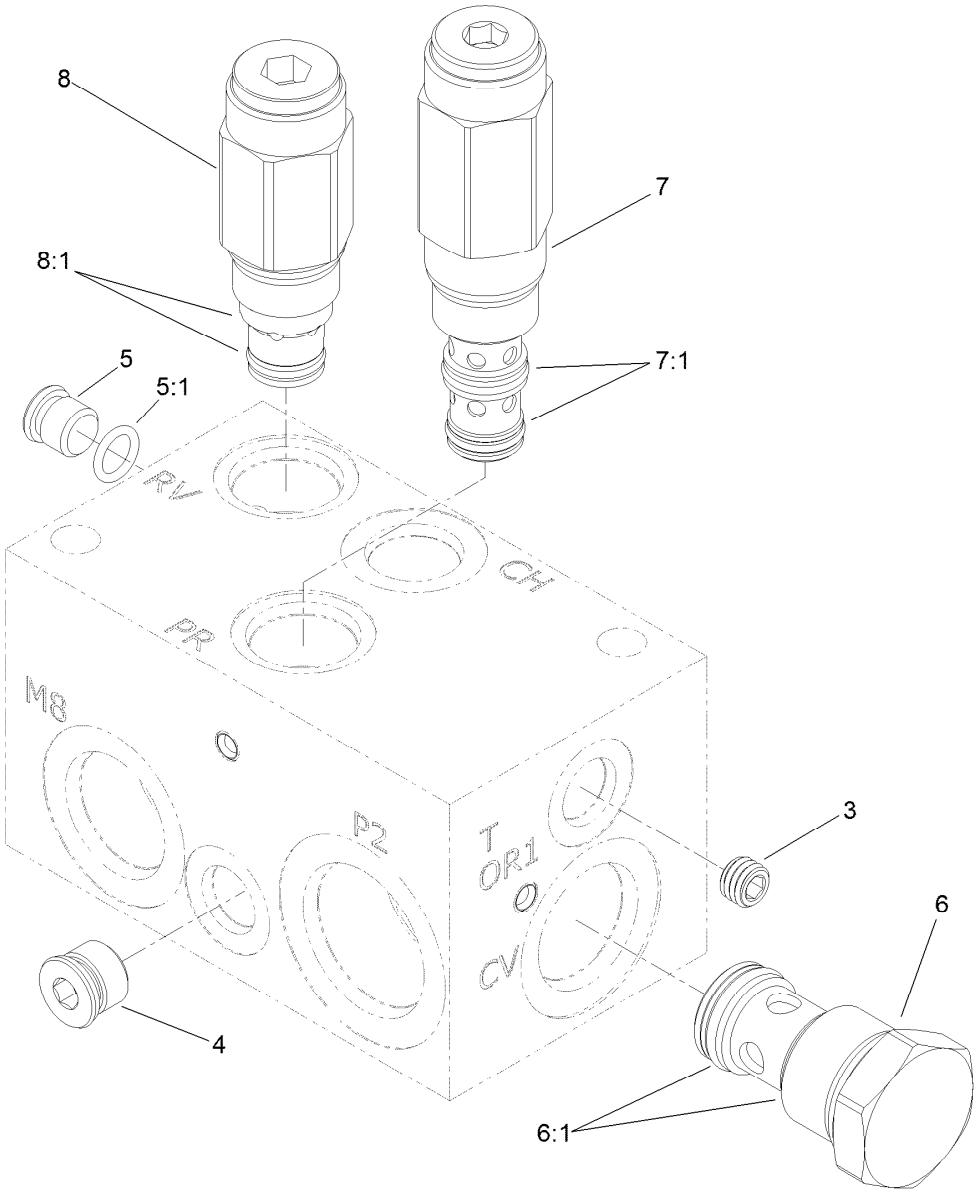


# Rear Traction Manifold Assembly No. 121-1530

| *Ref.* | *Part Number* | *Qty.* | *Description* |
|---|---|---|---|
| 3 | 110-0495 | 1 | Plug-Orifice (0.050 Inch) |
| 4 | | 1 | Plug ● |
| 5 | 353-990 | 1 | Plug ASM |
| 5:1 | 237-78 | 1 | O-Ring |
| 6 | 125-4328 | 1 | Valve-Check |
| 6:1 | 125-4336 | 1 | Seal Kit |
| 7 | 136-4362 | 1 | Valve-Reducing |
| 7:1 | 136-4361 | 1 | Seal Kit |
| 8 | 125-4331 | 1 | Valve-Relief |
| 8:1 | 110-6316 | 1 | Seal Kit |

● Not serviced separately

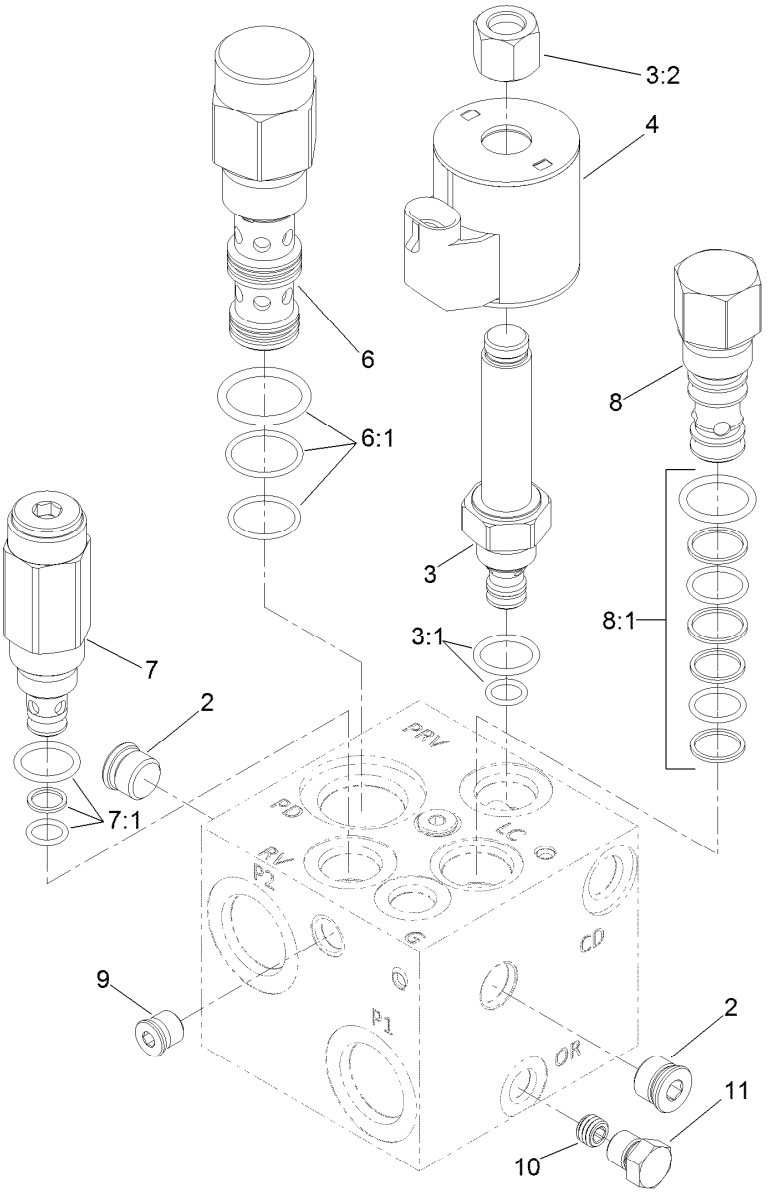


# Center and Right PTO Manifold Assembly No. 131-1248

| *Ref.* | *Part Number* | *Qty.* | *Description* |
|---|---|---|---|
| 2 | 112-9213 | 2 | Plug |
| 3 | 117-0227 | 1 | Valve-Relief, Proportional |
| 3:1 | 105-9156 | 1 | Seal Kit |
| 3:2 | 130-8180 | 1 | Nut-Coil (9/16-24 Unef-2B) |
| 4 | 110-6344 | 1 | Coil-12V, DC |
| 6 | 125-4327 | 1 | Valve-Directional, Pilot |
| 6:1 | 114-5515 | 1 | Seal Kit |
| 7 | 114-5512 | 1 | Valve-Relief, 600 PSI |
| 7:1 | 105-9156 | 1 | Seal Kit |
| 8 | 105-9153 | 1 | Element-Logic, Vented |
| 8:1 | 119-2159 | 1 | Seal Kit |
| 9 | 112-9212 | 3 | Plug |
| 10 | 117-8315 | 1 | Orifice (.025 Inch) |
| 11 | 117-0115 | 1 | Plug |

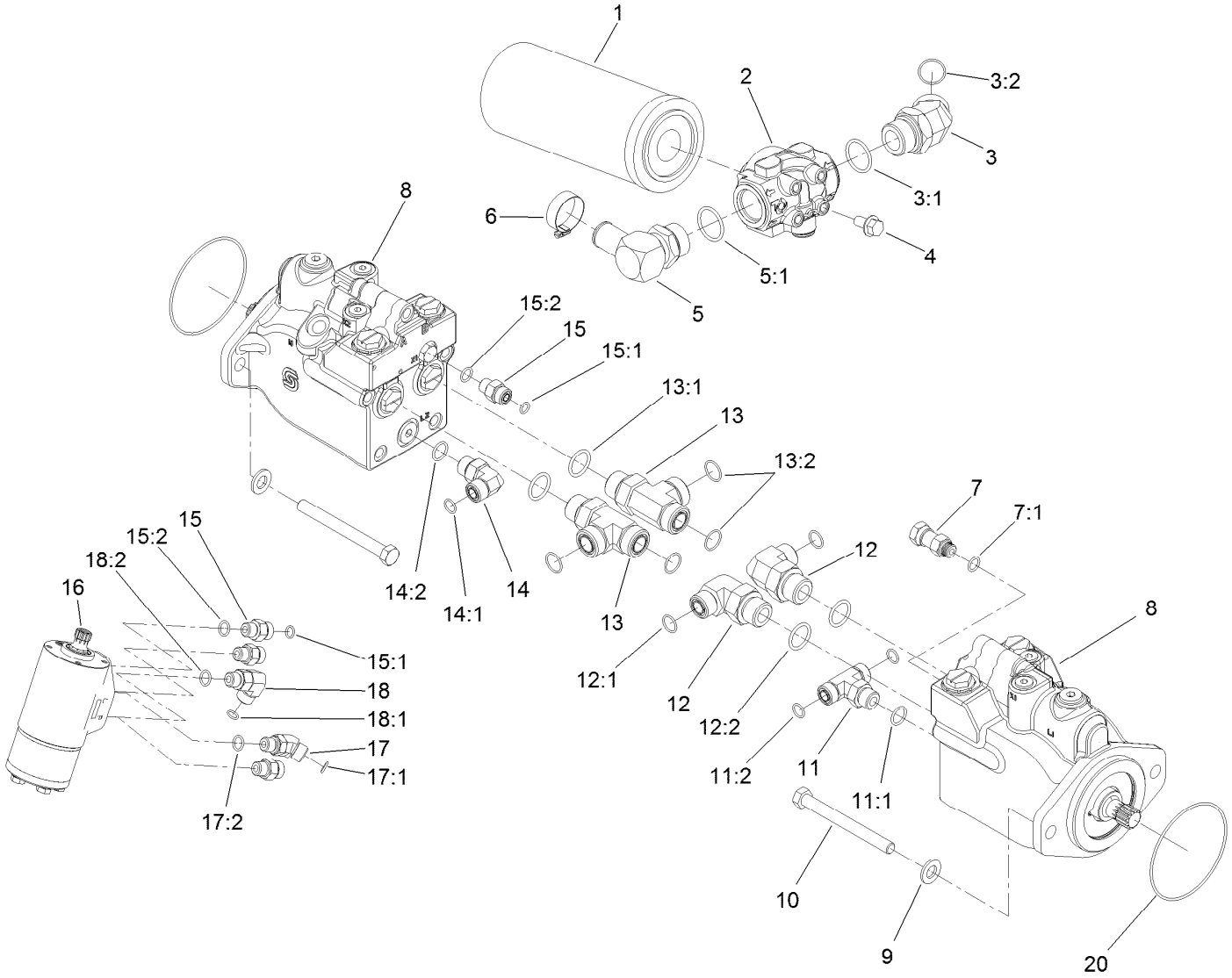


# Drive Motor, Steer Valve and Filter Head Assembly

| Ref. | Part Number | Qty. | Description |
|---|---|---|---|
| 1 | 94-2621 | 1 | Element-Filter |
| 2 | 121-1577 | 1 | Head-Filter |
| 3 | 104-3509 | 1 | Fitting-HYD, 45 DEG |
| 3:1 | 237-146 | 1 | O-Ring |
| 3:2 | 340-65 | 1 | O-Ring |
| 4 | 3234-1 | 4 | Screw-HHF |
| 5 | 23-8910 | 1 | Stem-Barb-90 |
| 5:1 | 237-146 | 1 | O-Ring |
| 6 | 2412-34 | 1 | Clamp-Hose |
| 7 | 104-3779 | 1 | Connector-Swivel, Straight |
| 7:1 | 237-42 | 1 | O-Ring |
| 8 | 120-8913 | 2 | HYD Motor ASM |
| 9 | 106-9888 | 4 | Washer-Flat |
| 10 | 33116-110 | 4 | Screw-HH |
| 11 | 340-157 | 1 | Fitting-HYD, Tee |
| 11:1 | 237-79 | 1 | O-Ring |
| 11:2 | 237-30 | 2 | O-Ring |
| 12 | 340-139 | 2 | Fitting-Elbow 90 |
| 12:1 | 237-81 | 1 | O-Ring |

| Ref. | Part Number | Qty. | Description |
|---|---|---|---|
| 12:2 | 237-65 | 1 | O-Ring |
| 13 | 340-148 | 2 | Fitting-Tee |
| 13:1 | 237-81 | 1 | O-Ring |
| 13:2 | 237-58 | 2 | O-Ring |
| 14 | 340-98 | 1 | Fitting-Elbow, 90 DEG |
| 14:1 | 237-79 | 1 | O-Ring |
| 14:2 | 237-30 | 1 | O-Ring |
| 15 | 340-2 | 4 | Fitting-Straight |
| 15:1 | 237-22 | 1 | O-Ring |
| 15:2 | 237-42 | 1 | O-Ring |
| 16 | 132-6256 | 1 | Valve-Steer |
| 17 | 340-87 | 1 | Fitting-Elbow, 45 DEG |
| 17:1 | 237-22 | 1 | O-Ring |
| 17:2 | 237-42 | 1 | O-Ring |
| 18 | 340-77 | 1 | Fitting-Elbow, 90 DEG |
| 18:1 | 237-22 | 1 | O-Ring |
| 18:2 | 237-42 | 1 | O-Ring |
| 20 | 237-166 | 2 | O-Ring |

# Hydraulic Motor Assembly No. 120-8913

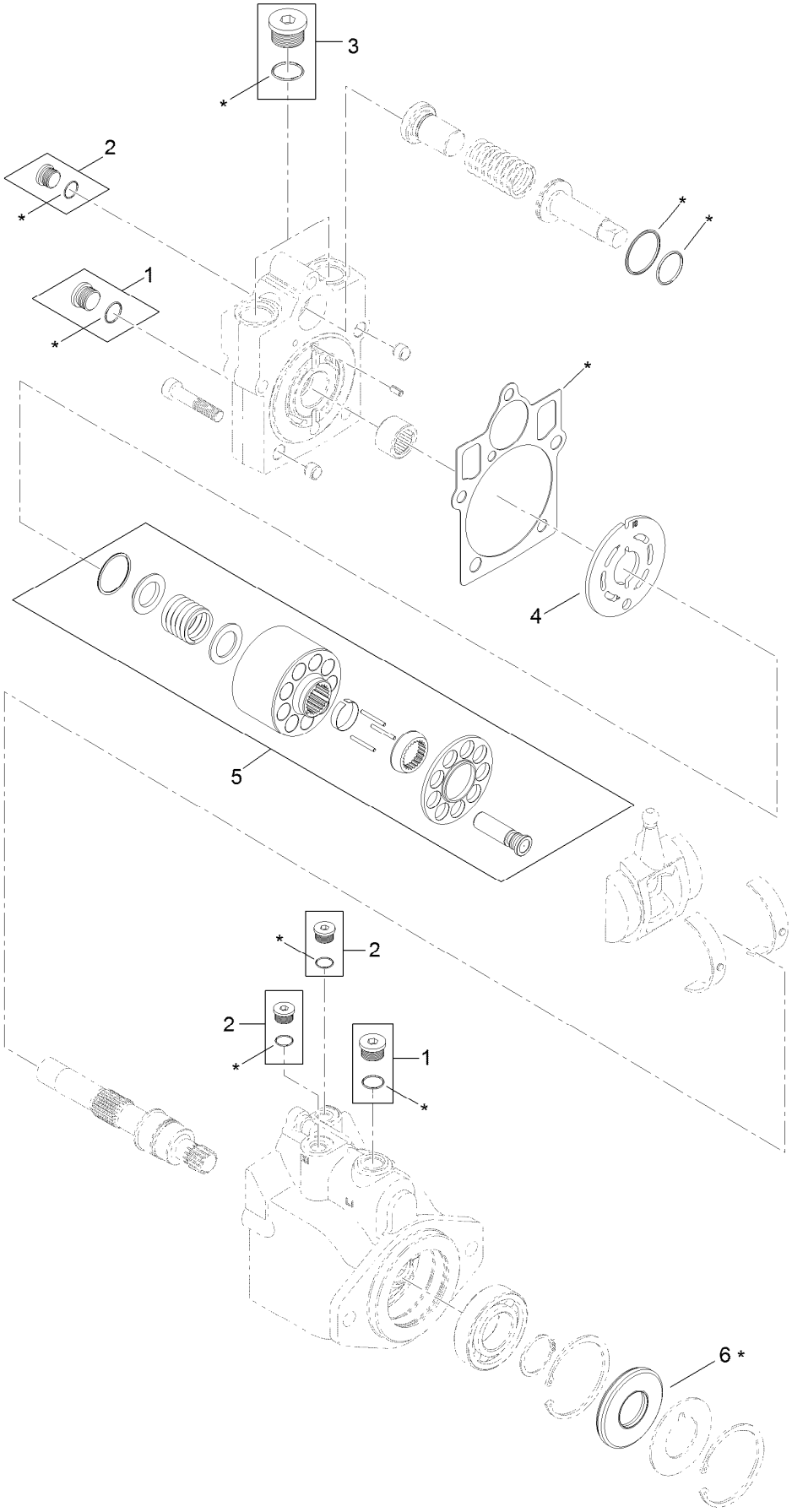


7 = all items with * are included in overhaul seal kit

# Hydraulic Motor Assembly No. 120-8913 (continued)

| Ref. | Part Number | Qty. | Description |
|---|---|---|---|
| 1 | 67-9090 | 2 | Plug |
| 2 | 75-0070 | 3 | Plug |
| 3 | 107-4352 | 1 | Plug |
| 4 | 121-1734 | 1 | Plate-Valve |
| 5 | 121-1735 | 1 | Cylinder Block Kit |
| 6 | 69-3190 | 1 | Seal-Lip |
| 7 | 121-1736 | 1 | Overhaul Seal Kit |

# Steering Valve Assembly No. 132-6256

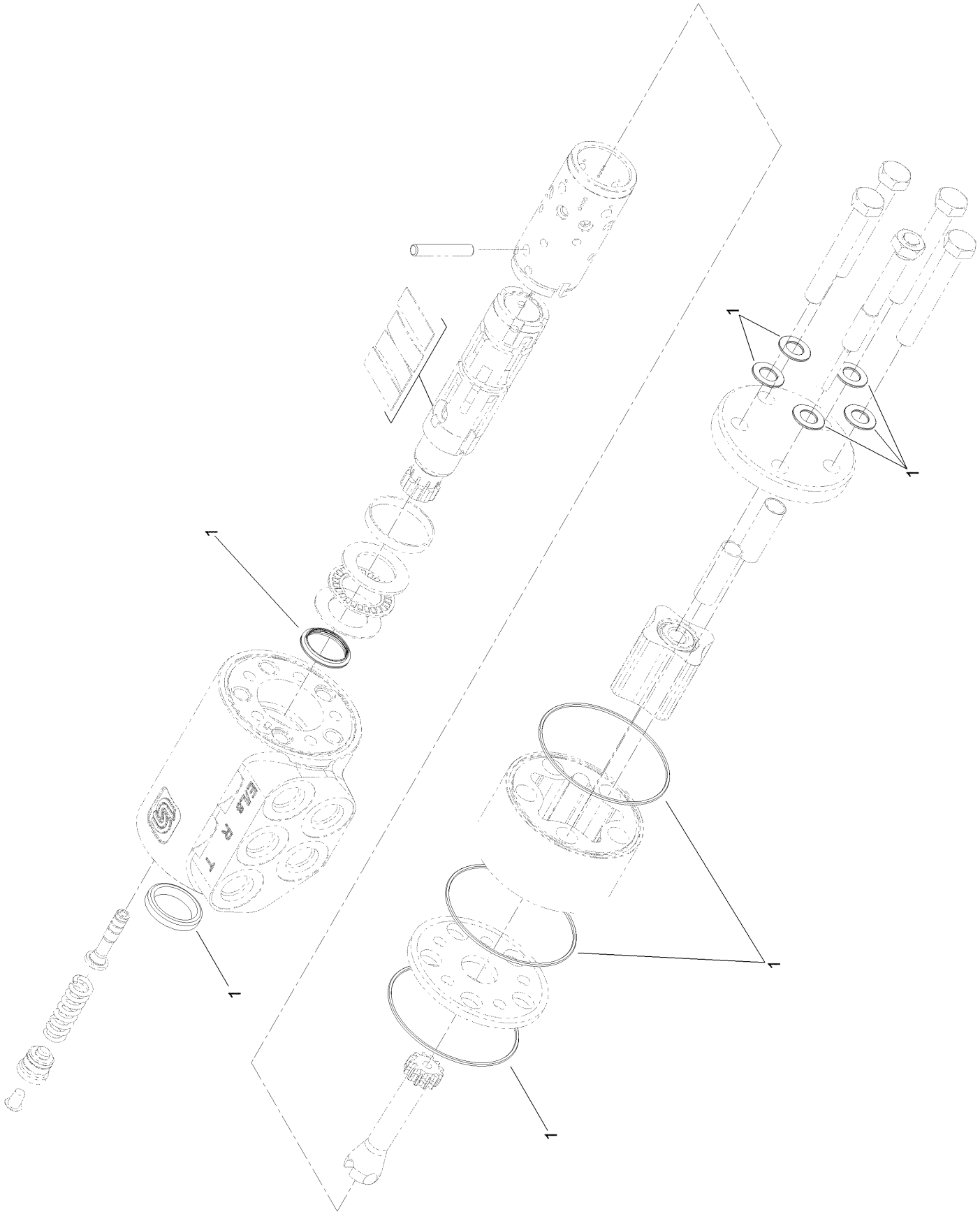

# Steering Valve Assembly No. 132-6256 (continued)

| *Ref.* | *Part Number* | *Qty.* | *Description* |
|---|---|---|---|
| 1 | 106-6716 | 1 | Seal Kit |

# Hydraulic Reservoir Assembly

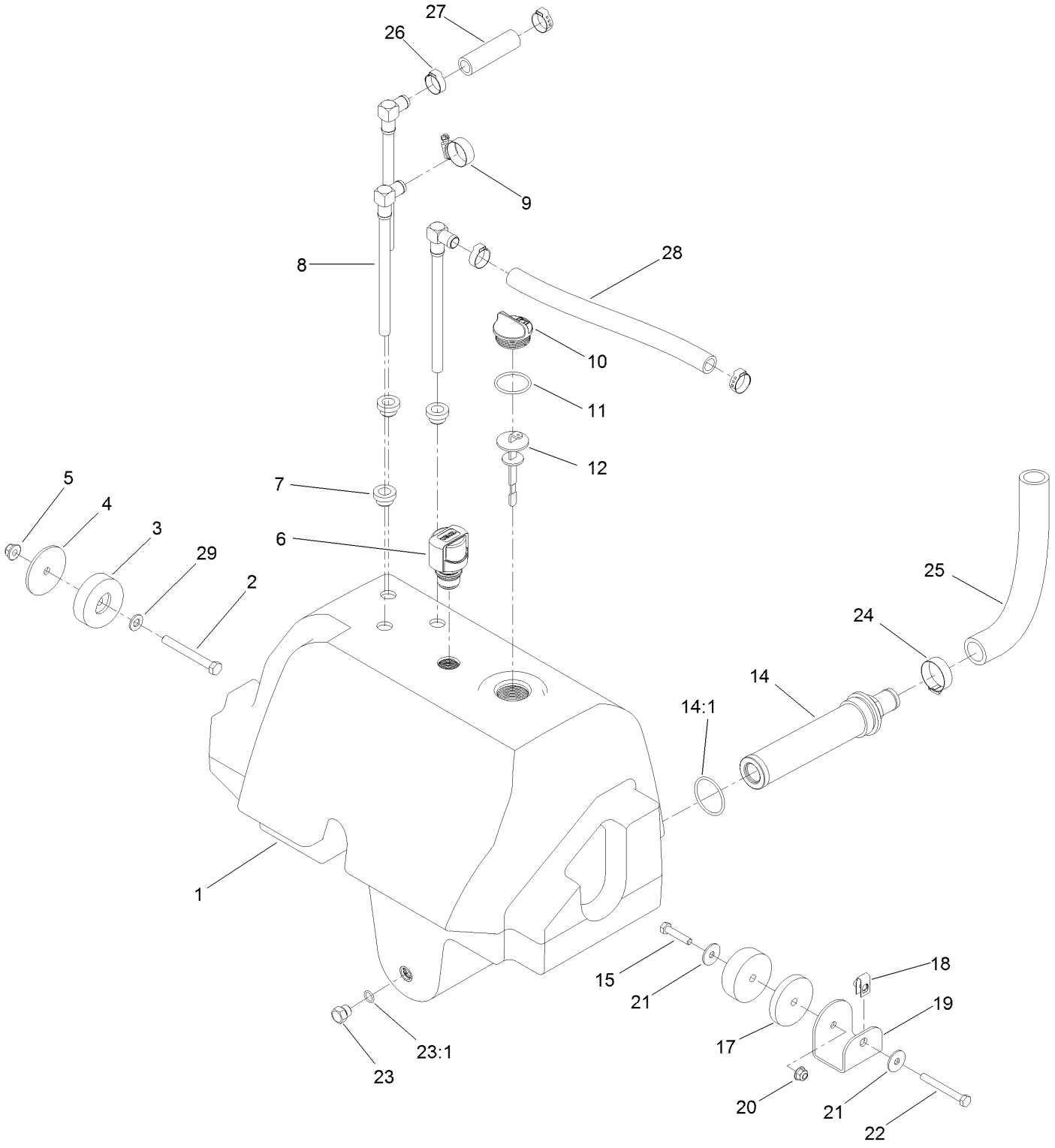

# Hydraulic Reservoir Assembly (continued)

| Ref. | Part Number | Qty. | Description |
|---|---|---|---|
| 1 | 120-9077 | 1 | Reservoir-HYD |
| 2 | 323-20 | 1 | Screw-HH |
| 3 | 108-1605 | 2 | Bumper-Recess |
| 4 | 121-1456 | 1 | Spacer-Thin |
| 5 | 104-8301 | 1 | Nut-HF, NI |
| 6 | 115-9793 | 1 | Breather |
| 7 | 104-0790 | 3 | Bushing |
| 8 | 114-0002 | 3 | Pipe-Stand |
| 9 | 2412-129 | 1 | Clamp-Hose |
| 10 | 93-7498 | 1 | Plug-Plastic |
| 11 | 237-101 | 1 | O-Ring |
| 12 | 112-6365 | 1 | Dipstick |
| 14 | 104-7546 | 1 | Tank Strainer ASM |
| 14:1 | 340-136 | 1 | O-Ring |
| 15 | 322-7 | 1 | Screw-HH |
| 17 | 121-1533 | 1 | Spacer-Thick |
| 18 | 115-7721 | 1 | Nut-Clip, U |
| 19 | 121-1557-03 | 1 | Mount-Tank |
| 20 | 104-8300 | 1 | Nut-HF, NI |
| 21 | 3256-82 | 2 | Washer-Flat |
| 22 | 322-13 | 1 | Screw-HH |
| 23 | 353-508 | 1 | Plug-HH |
| 23:1 | 237-42 | 1 | O-Ring |
| 24 | 2412-34 | 1 | Clamp-Hose |
| 25 | 120-8810 | 1 | Hose-Strainer |
| 26 | 115-5436 | 4 | Clamp-Hose, Crimp |
| 27 | 114-4920 | 1 | Hose |
| 28 | 121-1521 | 1 | Hose |
| 29 | 3256-24 | 1 | Washer-Flat |

# Lift, Steer and Fan Hydraulic Assembly

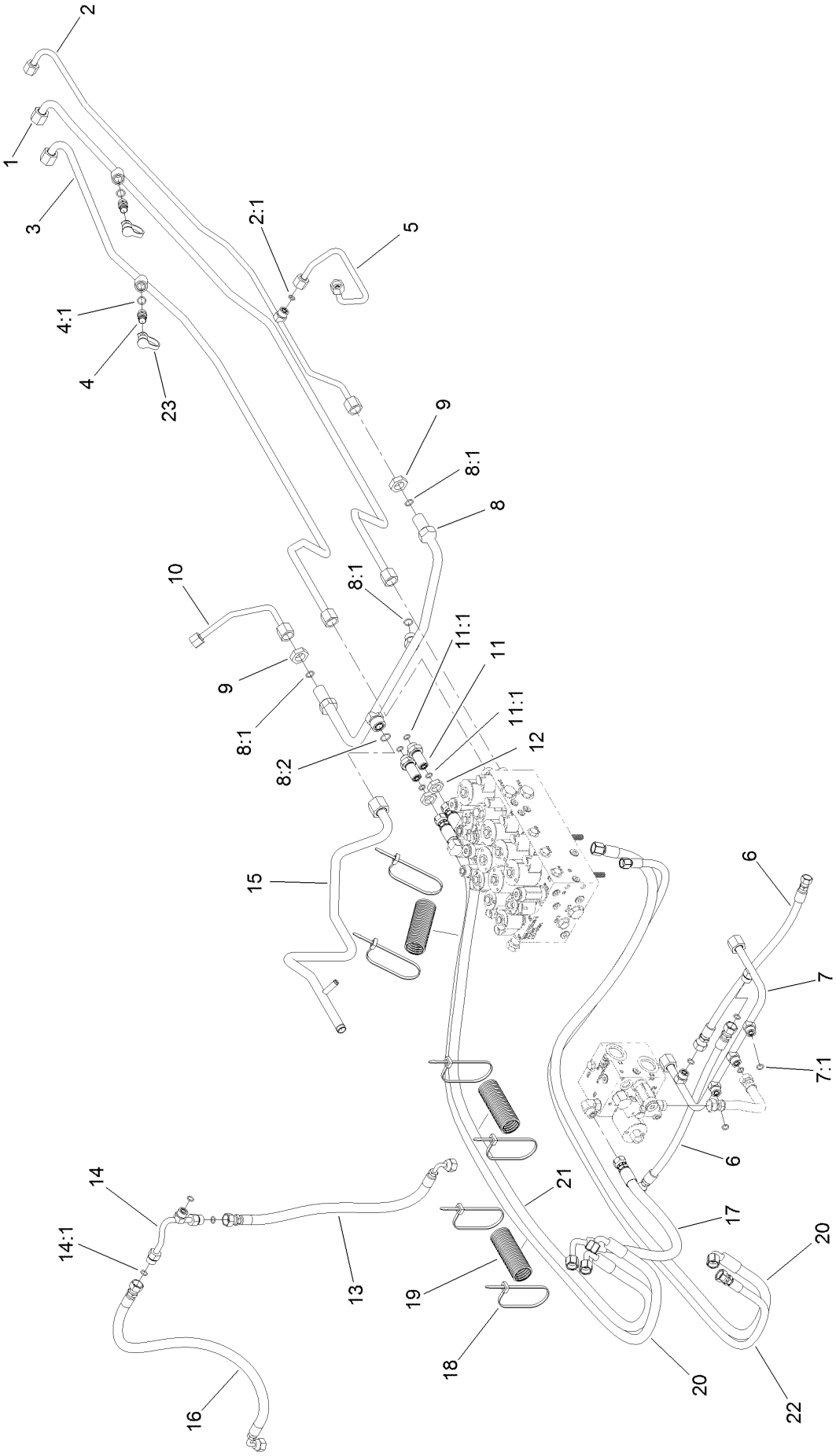

# Lift, Steer and Fan Hydraulic Assembly (continued)

| Ref. | Part Number | Qty. | Description |
|---|---|---|---|
| 1 | 120-9074 | 1 | Tube-Fan |
| 2 | 120-8966 | 1 | Tube-Drain, Fan |
| 2:1 | 237-22 | 1 | O-Ring |
| 3 | 120-9075 | 1 | Tube-Fan |
| 4 | 59-7410 | 2 | Fitting-Diagnostic |
| 4:1 | 237-42 | 1 | O-Ring |
| 5 | 132-6145 | 1 | Tube-HYD |
| 6 | 117-3123 | 2 | HYD Hose ASM |
| 7 | 120-9078 | 1 | Tube-HYD |
| 7:1 | 237-22 | 5 | O-Ring |
| 8 | 121-1509 | 1 | Tube-HYD |
| 8:1 | 237-30 | 3 | O-Ring |
| 8:2 | 237-65 | 1 | O-Ring |
| 9 | 340-127 | 2 | Nut-Bulkhead |
| 10 | 132-6146 | 1 | Tube-HYD |

| Ref. | Part Number | Qty. | Description |
|---|---|---|---|
| 11 | 340-71 | 2 | Fitting-Straight, Bulkhead |
| 11:1 | 237-22 | 2 | O-Ring |
| 12 | 340-70 | 2 | Nut-Lock |
| 13 | 121-1567 | 1 | Hose-HYD |
| 14 | 121-1565 | 1 | Tube-Tee |
| 14:1 | 237-22 | 3 | O-Ring |
| 15 | 121-1510 | 1 | Tube-HYD |
| 16 | 121-1566 | 1 | Hose-HYD |
| 17 | 139-0950 | 1 | Hose ASM |
| 18 | 3290-378 | 7 | Tie-Cable |
| 19 | 121-1544 | 3 | Cover-Hose |
| 20 | 137-5575 | 2 | Hose ASM |
| 21 | 137-5577 | 1 | Hose ASM |
| 22 | 137-5576 | 1 | Hose ASM |
| 23 | 354-79 | 2 | Cap-Dust |

# Oil Cooler Hydraulic Assembly

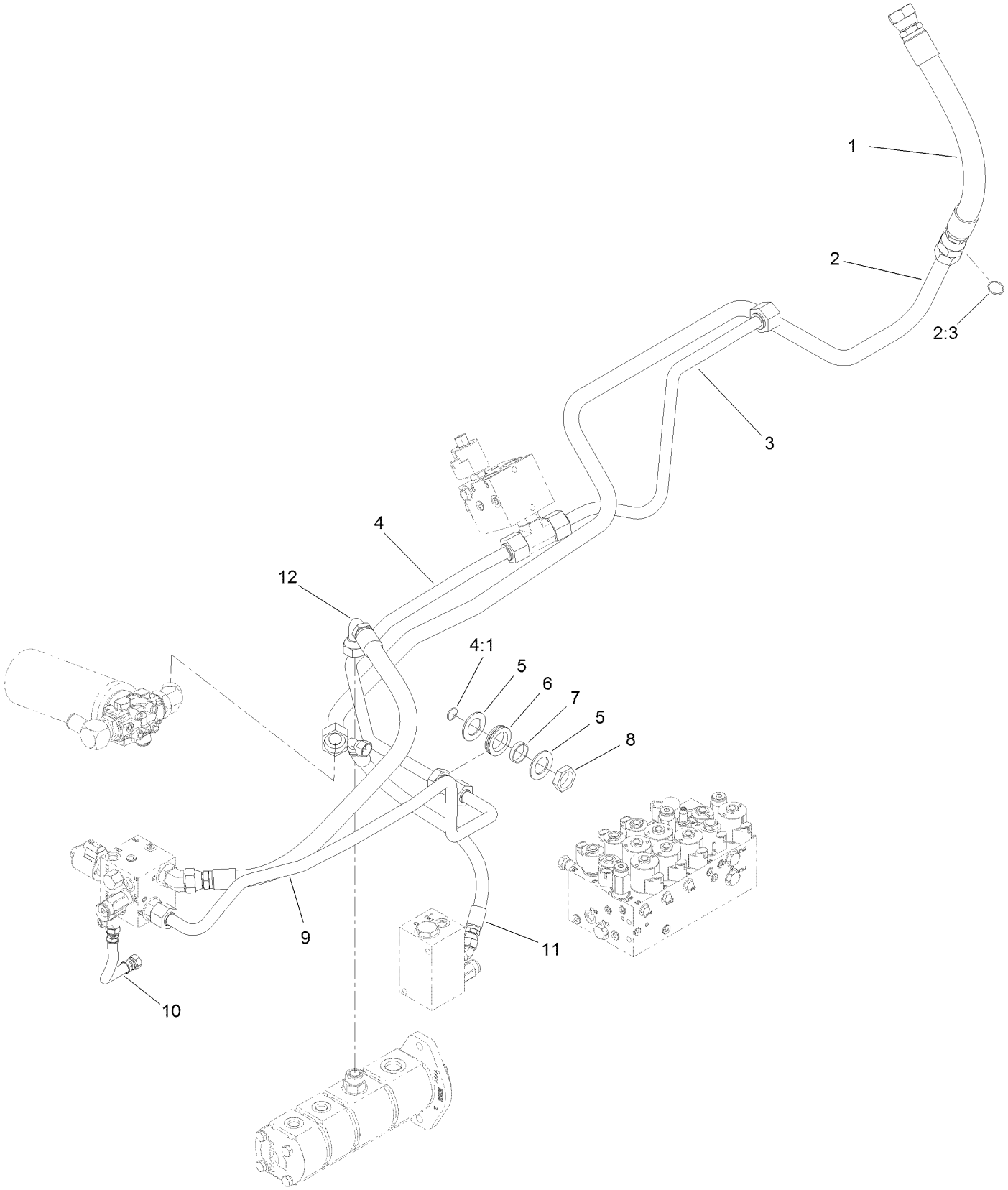

# Oil Cooler Hydraulic Assembly (continued)

| Ref. | Part Number | Qty. | Description |
|---|---|---|---|
| 1 | 120-9060 | 1 | Hose-HYD |
| 2 | 121-1612 | 1 | Tube ASM |
| 2:3 | 340-65 | 1 | O-Ring |
| 3 | 121-1626 | 1 | Tube-HYD |
| 4 | 121-1507 | 1 | Tube ASM |
| 4:1 | 237-58 | 1 | O-Ring |
| 5 | 69-8910 | 2 | Washer |
| 6 | 240-7 | 1 | Grommet-Rubber |
| 7 | 69-8900 | 1 | Spacer |
| 8 | 340-126 | 1 | Nut-Bulkhead |
| 9 | 120-8838 | 1 | Tube-PTO, Front Return |
| 10 | 121-1572 | 1 | Hose-HYD |
| 11 | 117-0686 | 1 | Hose-HYD |
| 12 | 115-4384 | 1 | Hose-HYD |

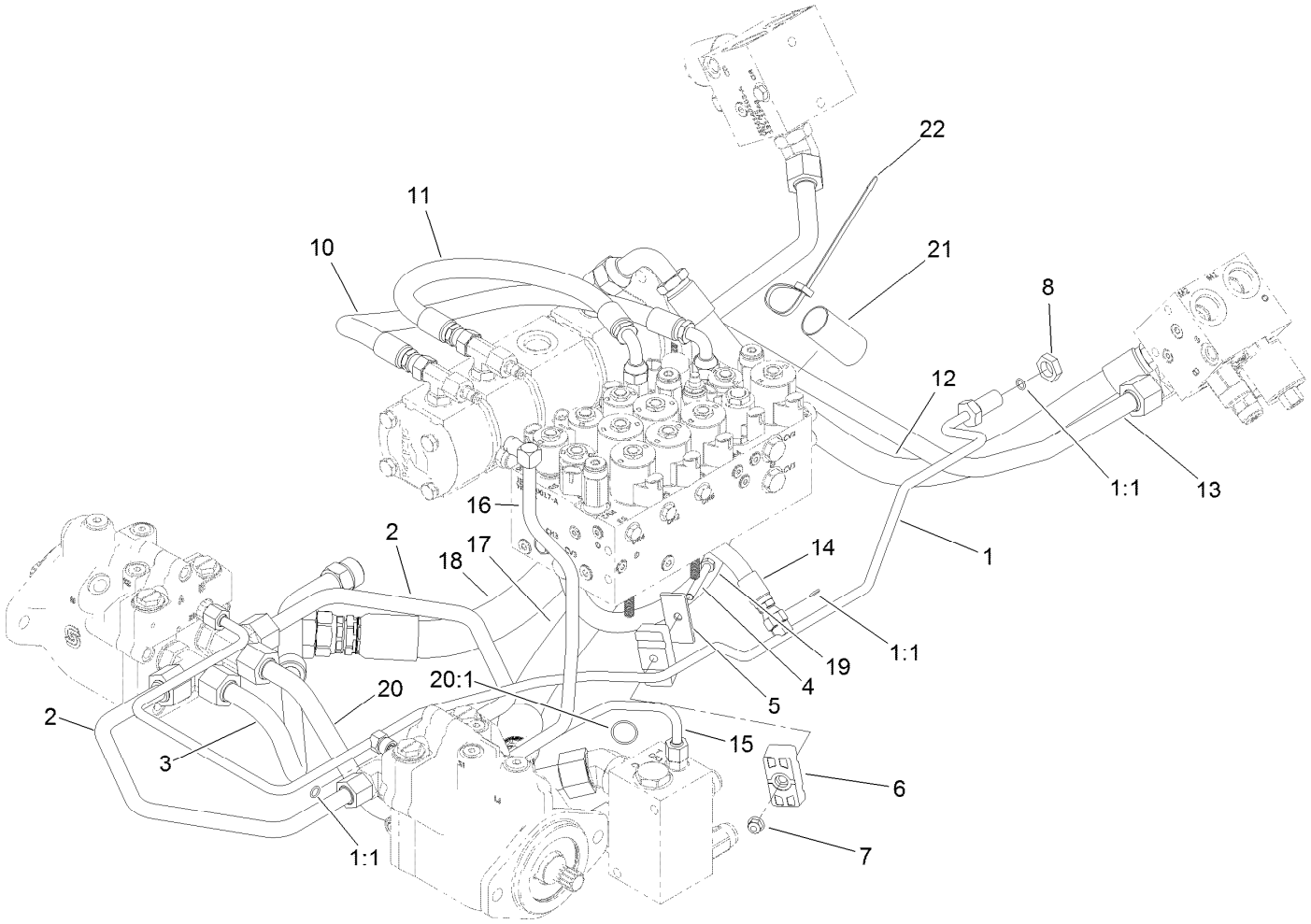


# Traction Hydraulic Assembly

| Ref. | Part Number | Qty. | Description |
|---|---|---|---|
| 1 | 121-1552 | 1 | Tube ASM |
| 1:1 | 237-22 | 3 | O-Ring |
| 2 | 120-9079 | 2 | Tube-HYD |
| 3 | 121-1624 | 1 | Tube-HYD |
| 4 | 322-11 | 1 | Screw-HH |
| 5 | 69-9761 | 1 | Plate-Cover |
| 6 | 120-3200 | 2 | Clamp-Tube |
| 7 | 104-8300 | 1 | Nut-HF, NI |
| 8 | 340-70 | 1 | Nut-Lock |
| 10 | 104-2807 | 1 | Hose-HYD |
| 11 | 104-4584 | 1 | Hose-HYD |
| 12 | 115-4384 | 1 | Hose-HYD |

| Ref. | Part Number | Qty. | Description |
|---|---|---|---|
| 13 | 120-8834 | 1 | Tube-PTO, LH To RH |
| 14 | 104-2234 | 1 | Hose-HYD |
| 15 | 121-1480 | 1 | Tube-HYD |
| 16 | 120-8961 | 1 | Tube-Return, Front |
| 17 | 132-6142 | 1 | Hose-HYD |
| 18 | 132-6141 | 1 | Hose-HYD |
| 19 | 132-6241 | 1 | Hose-HYD |
| 20 | 121-1581 | 1 | Tube-Tee |
| 20:1 | 340-65 | 1 | O-Ring |
| 21 | AU112950 | 1 | Protector-Hose |
| 22 | 3290-378 | 3 | Tie-Cable |

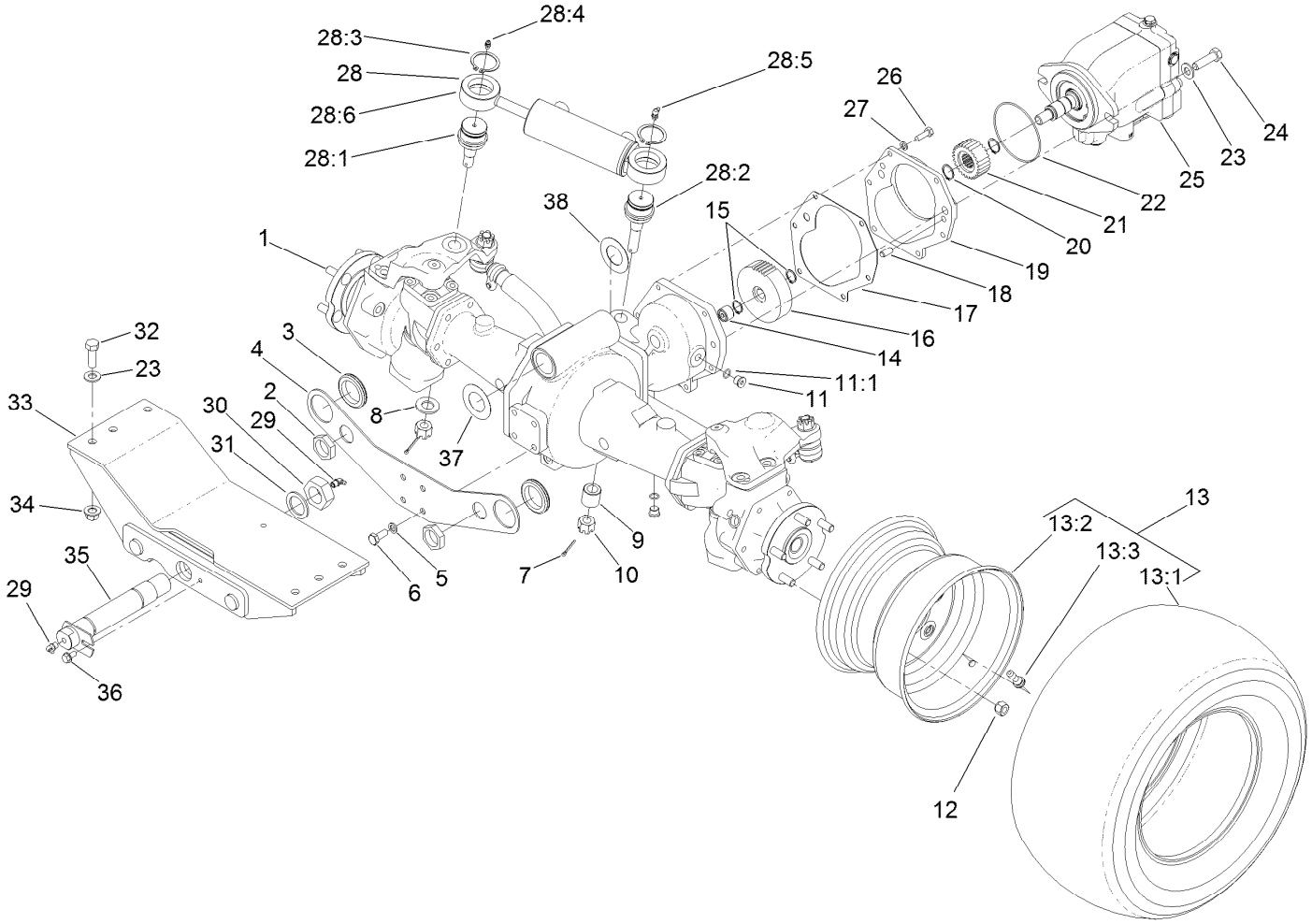


# Rear Axle and Steering Cylinder Assembly

| Ref. | Part Number | Qty. | Description |
|---|---|---|---|
| 1 | 110-4750 | 1 | Drive Axle ASM |
| 2 | 340-126 | 2 | Nut-Bulkhead |
| 3 | 240-2 | 2 | Grommet-Rubber |
| 4 | 120-9069-03 | 1 | Plate-Mount, Bulkhead |
| 5 | 43-0090 | 4 | Screw-HH |
| 6 | 48-9590 | 4 | Washer-Lock |
| 7 | 3272-12 | 2 | Pin-Cotter |
| 8 | 92-5836 | 1 | Washer |
| 9 | 100-3796 | 1 | Spacer-Joint, Ball |
| 10 | 32136-14 | 2 | Nut-Hst |
| 11 | 353-989 | 2 | Plug-Hex, Hollow |
| 11:1 | 237-42 | 1 | O-Ring |
| 12 | 93-5268 | 10 | Nut-Lug |
| 13 | | 2 | Tire And Wheel ASM ● |
| 13:1 | 120-8910 | 1 | Tire-Off Road |
| 13:2 | 120-8909 | 1 | Rim |
| 13:3 | 232-27 | 1 | Stem-Valve |
| 14 | 74-5700 | 1 | Bearing-Needle, Roller |

| Ref. | Part Number | Qty. | Description |
|---|---|---|---|
| 15 | 32120-15 | 2 | Ring-Snap, EXT |
| 16 | 100-3053 | 1 | Gear-45 Tooth |
| 17 | 106-1140 | 1 | Gasket |
| 18 | 104-2353 | 2 | Pin-Dowel |
| 19 | 95-7541 | 1 | Plate-Cover |
| 20 | 32120-76 | 2 | Ring-Snap, EXT |
| 21 | 104-0755 | 1 | Pinion-27 Tooth |
| 22 | 237-166 | 1 | O-Ring |
| 23 | 3256-26 | 8 | Washer-Flat |
| 24 | 325-7 | 2 | Screw-HH |
| 25 | 120-8814 | 1 | HYD Motor ASM |
| 26 | 33114-025 | 6 | Screw-HH |
| 27 | 3253-4 | 6 | Washer-Lock |
| 28 | 121-1535 | 1 | Steering Cylinder ASM |
| 28:1 | 106-6774 | 1 | Joint-Ball |
| 28:2 | 100-3795 | 1 | Joint-Ball |
| 28:3 | 32151-104 | 2 | Ring-Retaining, External |
| 28:4 | 302-5 | 1 | Fitting-Grease |

● Not serviced separately

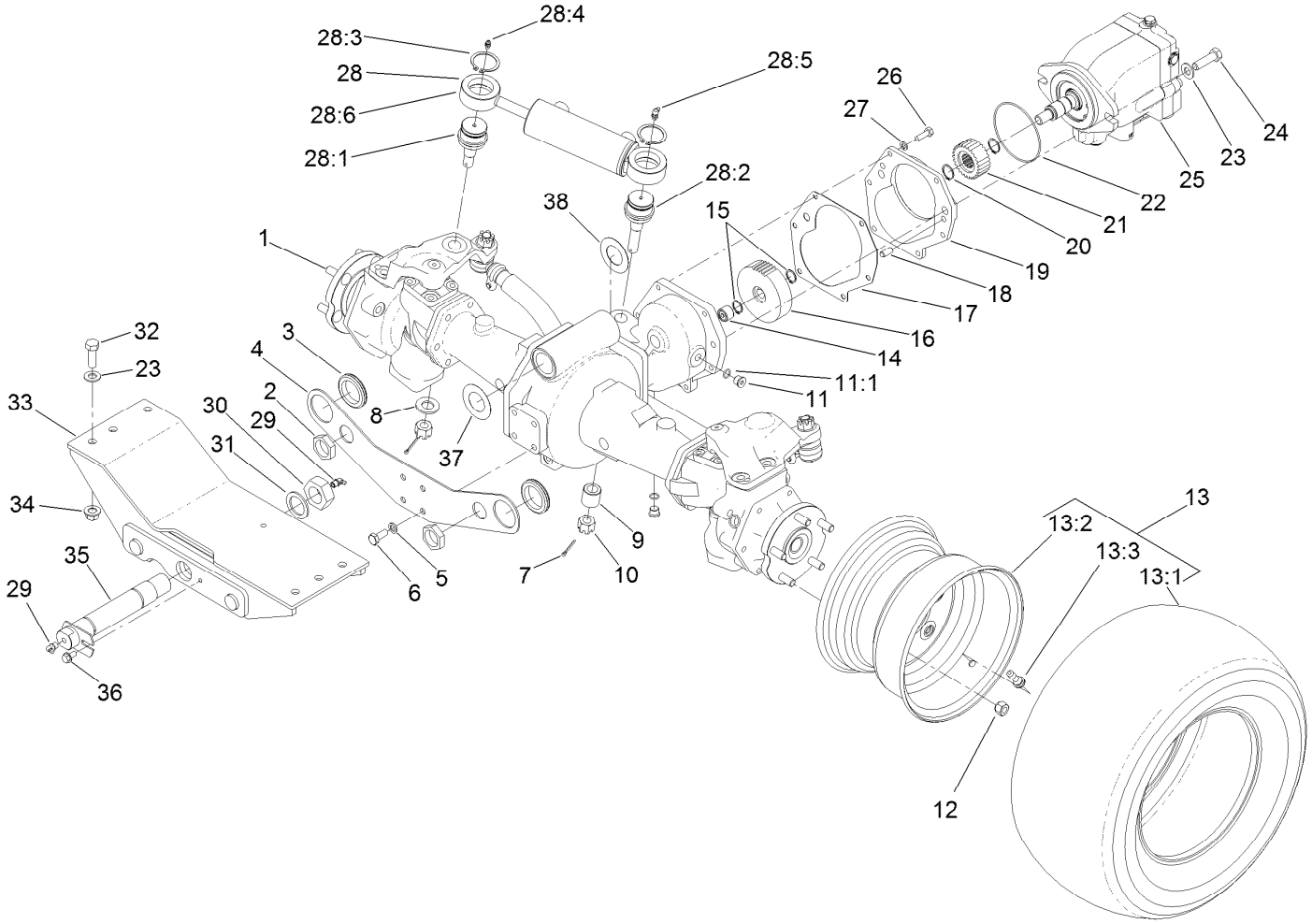


# Rear Axle and Steering Cylinder Assembly (continued)

| Ref. | Part Number | Qty. | Description |
|---|---|---|---|
| 28:5 | 302-60 | 1 | Fitting-Grease |
| 28:6 | 121-1534 | 1 | HYD Steering Cylinder ASM |
| 29 | 302-33 | 2 | Fitting-Grease |
| 30 | 3296-68 | 1 | Nut-Lock, NI |
| 31 | 92-1765 | 1 | Washer-Thrust |
| 32 | 325-6 | 6 | Screw-HH |

| Ref. | Part Number | Qty. | Description |
|---|---|---|---|
| 33 | 130-2744-03 | 1 | Mount-Rear |
| 34 | 99-5107 | 6 | Nut-Lock |
| 35 | 98-7077 | 1 | Pin-Axle, Rear |
| 36 | 32144-14 | 1 | Screw-HWHTF |
| 37 | 99-8431 | 2 | Washer-Thrust |
| 38 | 99-8432 | 2 | Washer-Thrust |

● Not serviced separately

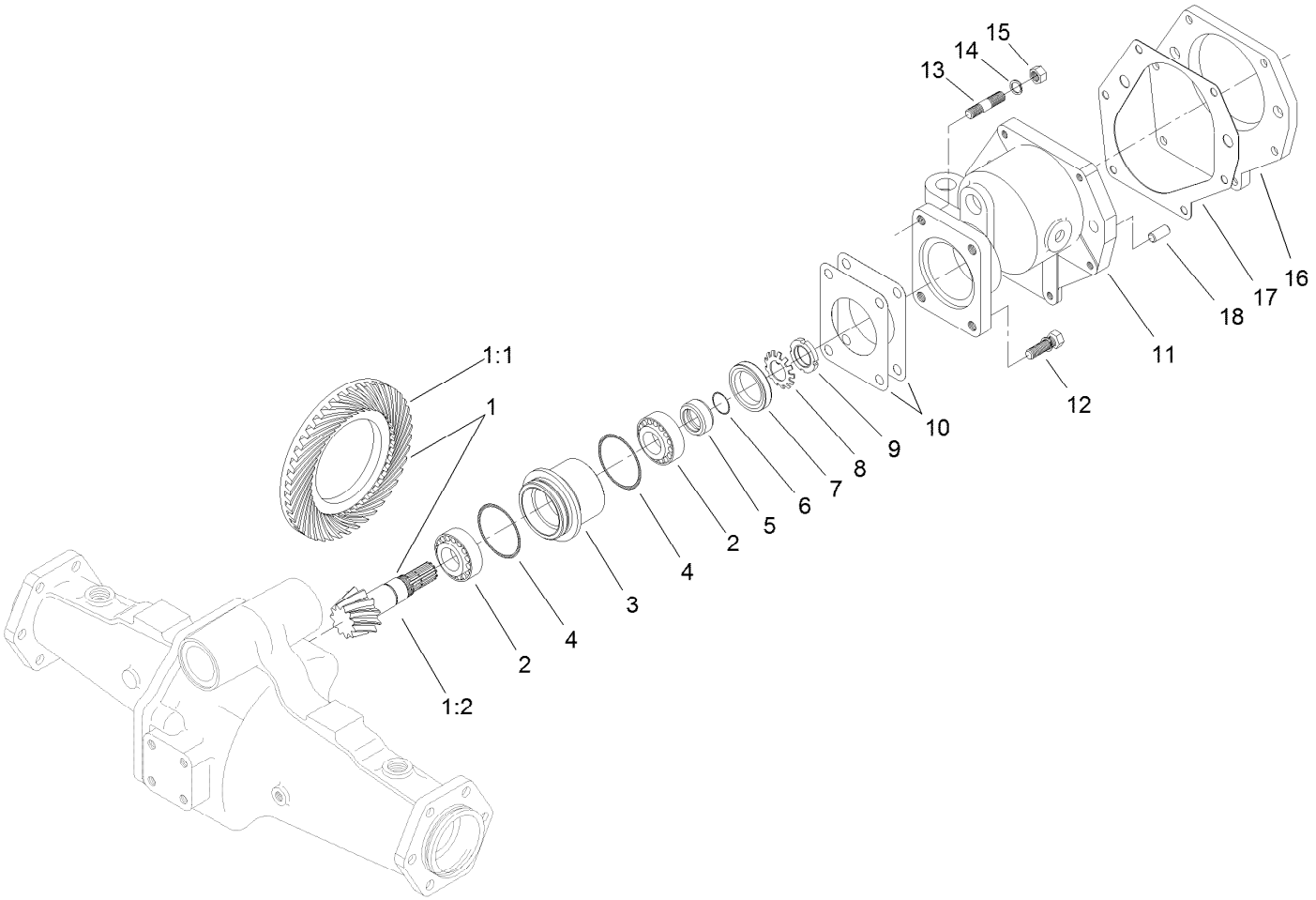


# Bevel Pinion Shaft Assembly
# Rear Axle Assembly No. 110-4750

| Ref. | Part Number | Qty. | Description |
|---|---|---|---|
| 1 | 106-1093 | 1 | Ring And Pinion Set |
| 1:1 | 95-7504 | 1 | Gear-43 Tooth, Bevel Spiral |
| 1:2 | 106-1092 | 1 | Pinion-Spiral, Bevel |
| 2 | 99-7570 | 2 | Bearing-Roller, Taper |
| 3 | 95-7534 | 1 | Case-Bearing |
| 4 | 106-1065 | 2 | O-Ring |
| 5 | 99-7572 | 1 | Collar-Seal, Oil |
| 6 | 106-1066 | 1 | O-Ring |
| 7 | 99-7574 | 1 | Seal-Oil |
| 8 | 99-7559 | 1 | Washer-Lock |
| 9 | 99-7560 | 1 | Nut-Lock |

| Ref. | Part Number | Qty. | Description |
|---|---|---|---|
| 10 | 99-7550 | 2 | Shim 0.1 |
| 10 | 99-7551 | 2 | Shim 0.2 |
| 11 | 95-7533 | 1 | Case-Gear |
| 12 | 99-7575 | 2 | Bolt |
| 13 | 98-7735 | 2 | Stud |
| 14 | 99-7527 | 2 | Washer-Spring |
| 15 | 99-7526 | 2 | Nut |
| 16 | 95-7541 | 1 | Plate-Cover |
| 17 | 106-1140 | 1 | Gasket |
| 18 | 104-2353 | 2 | Pin-Dowel |

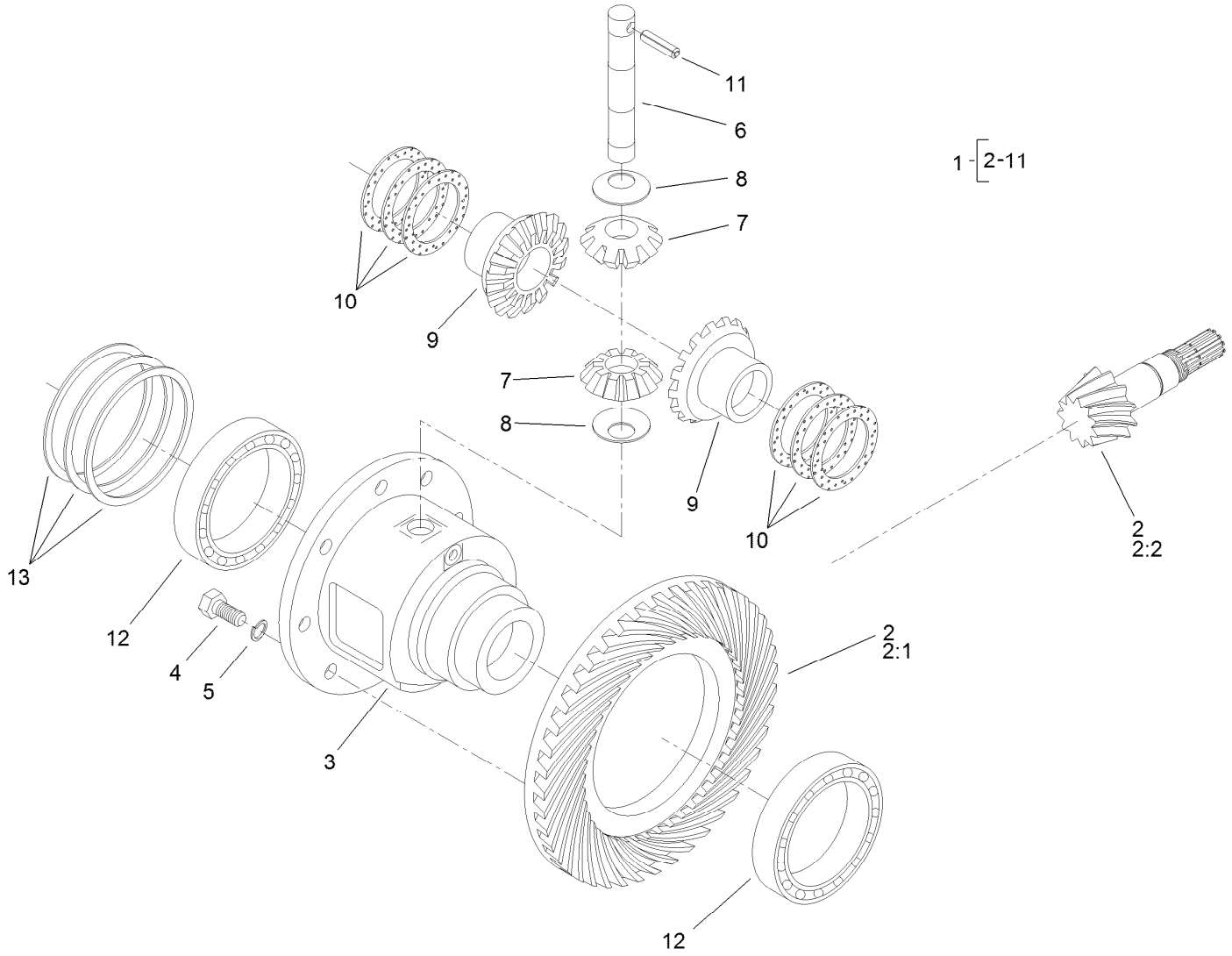


# Differential Assembly
# Rear Axle Assembly No. 110-4750

| Ref. | Part Number | Qty. | Description |
|---|---|---|---|
| 1 | 95-7503 | 1 | Differential ASM |
| 2 | 106-1093 | 1 | Ring And Pinion Set |
| 2:1 | 95-7504 | 1 | Gear-43 Tooth, Bevel Spiral |
| 2:2 | 106-1092 | 1 | Pinion-Spiral, Bevel |
| 3 | 95-7502 | 1 | Case-Differential |
| 4 | 99-7576 | 8 | Bolt |
| 5 | 3253-4 | 8 | Washer-Lock |
| 6 | 99-7578 | 1 | Shaft-Differential |
| 7 | 99-7579 | 2 | Pinion-Differential |
| 8 | 99-7580 | 2 | Washer-Differential |

| Ref. | Part Number | Qty. | Description |
|---|---|---|---|
| 9 | 99-7581 | 2 | Gear-Differential |
| 10 | 99-7582 | 2 | Washer-Differential |
| 10 | 99-7583 | 2 | Washer-Differential |
| 10 | 99-7584 | 2 | Washer-Differential |
| 11 | 99-7588 | 1 | Pin-Spring |
| 12 | 99-7562 | 2 | Bearing-Ball |
| 13 | 99-7585 | 2 | Shim 0.1 |
| 13 | 99-7586 | 2 | Shim 0.2 |
| 13 | 99-7587 | 2 | Shim 0.4 |

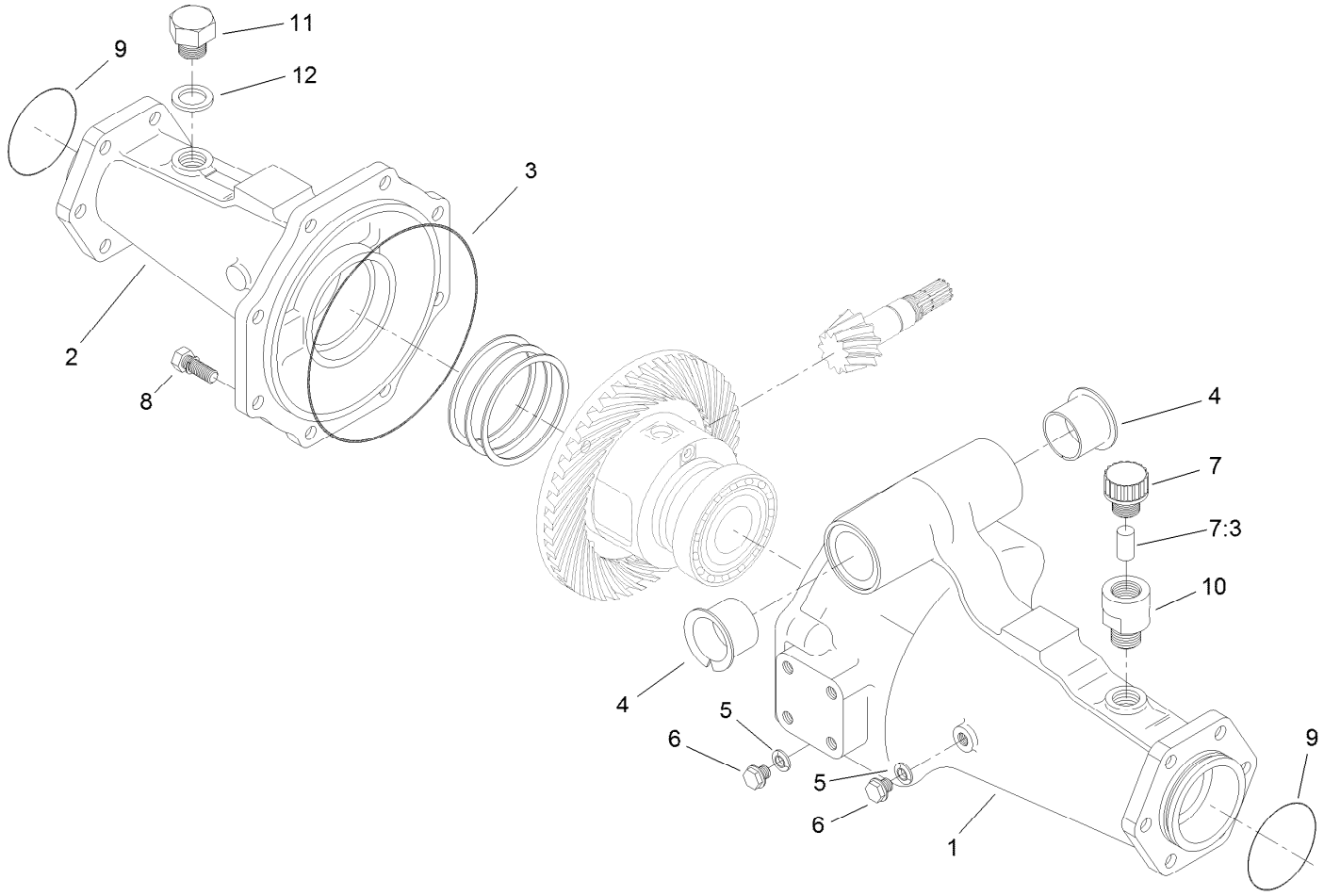


# Axle Support Assembly
# Rear Axle Assembly No. 110-4750

| *Ref.* | *Part Number* | *Qty.* | *Description* |
|---|---|---|---|
| 1 | 95-7508 | 1 | Support-Axle |
| 2 | 95-7506 | 1 | Support-Axle |
| 3 | 106-1067 | 1 | O-Ring |
| 4 | 95-7537 | 2 | Bushing-Flanged |
| 5 | 99-7590 | 2 | Washer-Seal |
| 6 | 99-7589 | 2 | Plug |
| 7 | 110-4812 | 1 | Axle Vent ASM |
| 7:3 | 110-4815 | 1 | Insert-Filter, Foam |
| 8 | 99-7592 | 8 | Bolt |
| 9 | 106-1068 | 2 | O-Ring |
| 10 | 104-2377 | 1 | Extension-Vent |
| 11 | 104-8643 | 1 | Plug |
| 12 | 104-8644 | 1 | O-Ring |

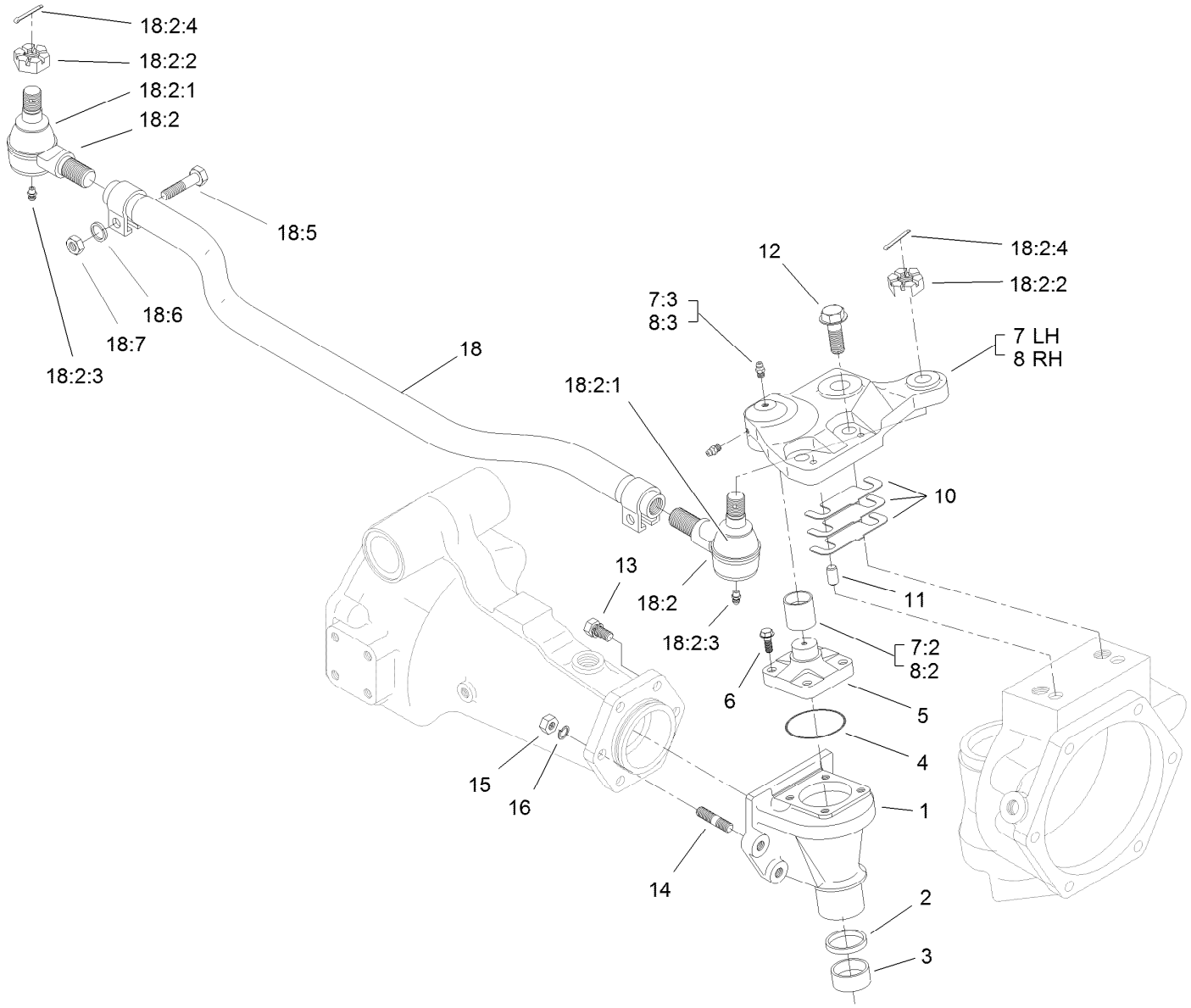


# Bevel Gear Case Assembly
# Rear Axle Assembly No. 110-4750

| Ref. | Part Number | Qty. | Description |
|---|---|---|---|
| 1 | 110-4752 | 2 | Case-Gear, Bevel |
| 2 | 110-4754 | 2 | Seal-Oil |
| 3 | 104-2378 | 2 | Bushing |
| 4 | 106-1069 | 2 | O-Ring |
| 5 | 104-2373 | 2 | Knuckle |
| 6 | 104-2374 | 8 | Bolt |
| 7 | 100-3768 | 1 | LH Steering Arm ASM |
| 7:2 | 104-8634 | 1 | Bushing |
| 7:3 | 106-1104 | 2 | Fitting-Grease |
| 8 | 100-3766 | 1 | RH Steering Arm ASM |
| 8:2 | 104-8634 | 1 | Bushing |
| 8:3 | 106-1104 | 2 | Fitting-Grease |
| 10 | 95-7547 | 2 | Shim 0.1 |
| 10 | 95-7548 | 2 | Shim 0.2 |
| 10 | 95-7549 | 2 | Shim 0.3 |
| 11 | 99-7597 | 4 | Pin-Dowel |

| Ref. | Part Number | Qty. | Description |
|---|---|---|---|
| 12 | 104-2375 | 4 | Bolt |
| 13 | 99-7599 | 8 | Bolt |
| 14 | 99-7525 | 4 | Stud |
| 15 | 99-7526 | 4 | Nut |
| 16 | 99-7527 | 4 | Washer-Spring |
| 18 | 106-1141 | 1 | Steering Tie Rod ASM |
| 18:2 | 106-1113 | 2 | Tie Rod End ASM - RH Thread |
| 18:2:1 | 100-3853 | 1 | Cover-Dust |
| 18:2:2 | 100-3854 | 1 | Nut-Castle |
| 18:2:3 | 110-4755 | 1 | Fitting-Grease |
| 18:2:4 | 3272-11 | 1 | Pin-Cotter |
| 18:5 | 100-3855 | 2 | Bolt |
| 18:6 | 99-7527 | 2 | Washer-Spring |
| 18:7 | 99-7526 | 2 | Nut |

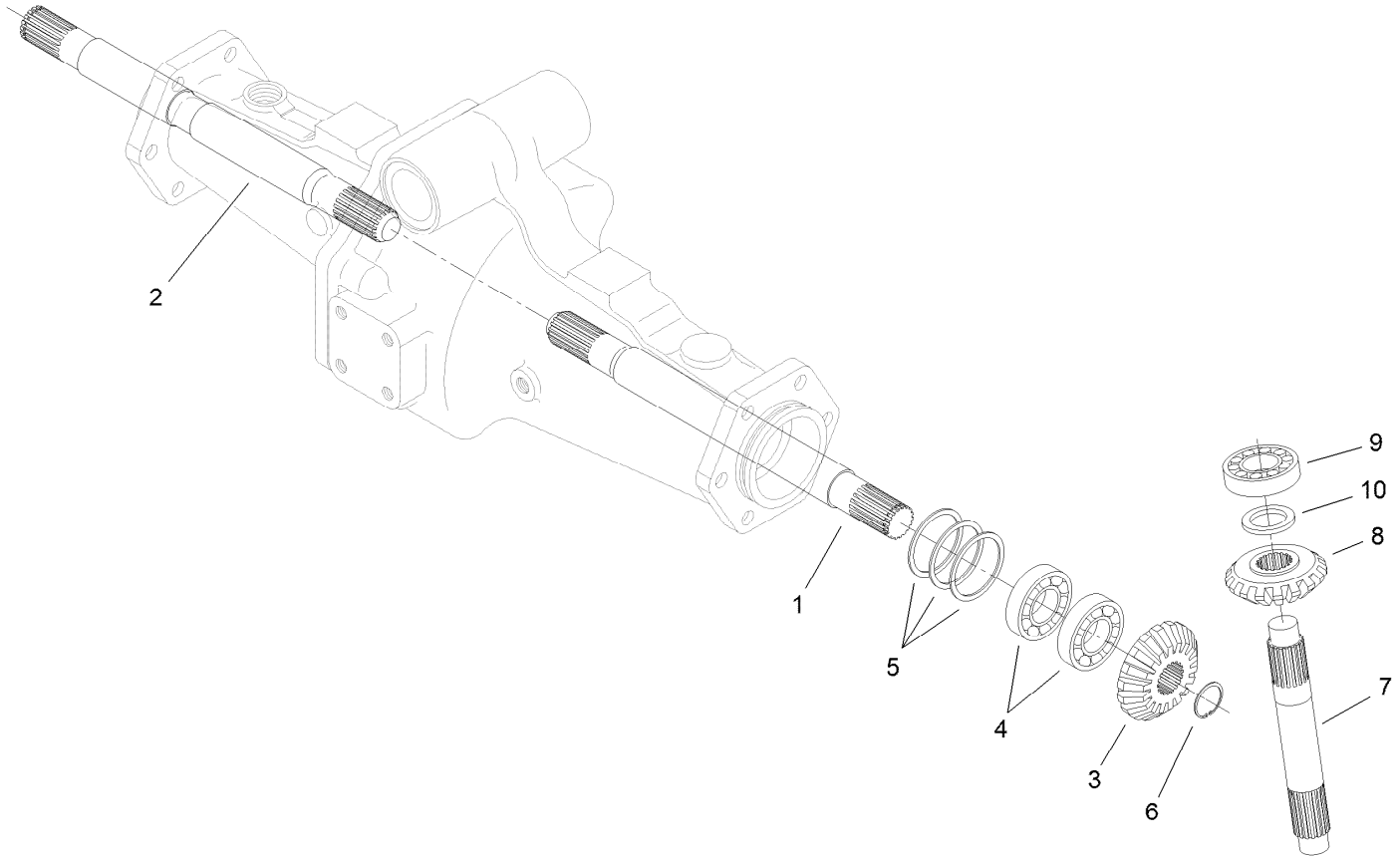


# Bevel Gear Shaft Assembly
# Rear Axle Assembly No. 110-4750

| *Ref.* | *Part Number* | *Qty.* | *Description* |
|---|---|---|---|
| 1 | 95-7509 | 1 | Shaft-Gear, Differential |
| 2 | 95-7512 | 1 | Shaft-Gear, Differential |
| 3 | 95-7517 | 2 | Gear-Bevel, 15 Tooth |
| 4 | 99-7530 | 4 | Bearing-Ball |
| 5 | 99-7552 | 2 | Shim 0.1 |
| 5 | 99-7553 | 2 | Shim 0.2 |
| 5 | 99-7554 | 2 | Shim 0.5 |
| 6 | 99-7531 | 2 | Clip |
| 7 | 110-4753 | 2 | Shaft-Gear, Bevel |
| 8 | 95-7519 | 2 | Gear-Bevel, 17 Tooth |
| 9 | 99-7532 | 2 | Bearing-Roller, Taper |
| 10 | 99-7558 | 2 | Collar |

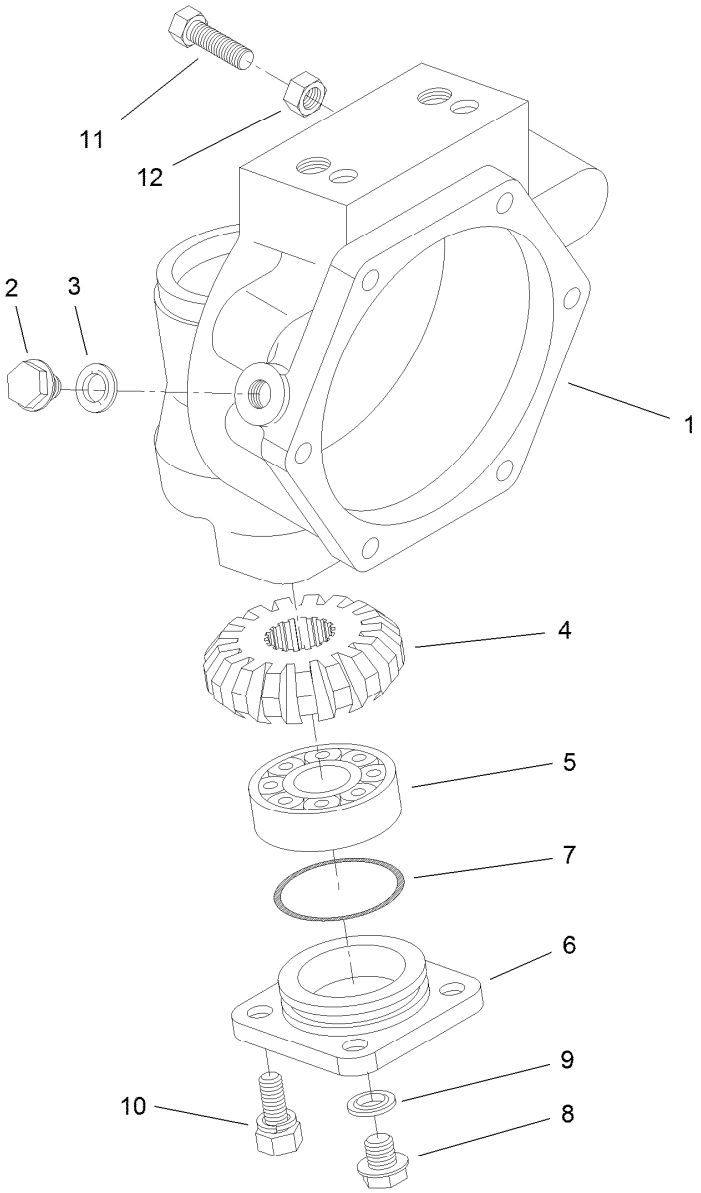


# Axle Case Assembly
# Rear Axle Assembly No. 110-4750

| *Ref.* | *Part Number* | *Qty.* | *Description* |
|---|---|---|---|
| 1 | 110-4751 | 2 | Case-Axle |
| 2 | 99-7535 | 2 | Plug |
| 3 | 99-7536 | 2 | Washer-Seal |
| 4 | 95-7527 | 2 | Gear-Bevel, 17 Tooth |
| 5 | 99-7532 | 2 | Bearing-Roller, Taper |
| 6 | 100-2560 | 2 | Cover |
| 7 | 106-1070 | 2 | O-Ring |
| 8 | 99-7589 | 2 | Plug |
| 9 | 99-7590 | 2 | Washer-Seal |
| 10 | 100-2562 | 8 | Bolt |
| 11 | 106-1102 | 2 | Bolt-Stop |
| 12 | 106-1103 | 2 | Nut |

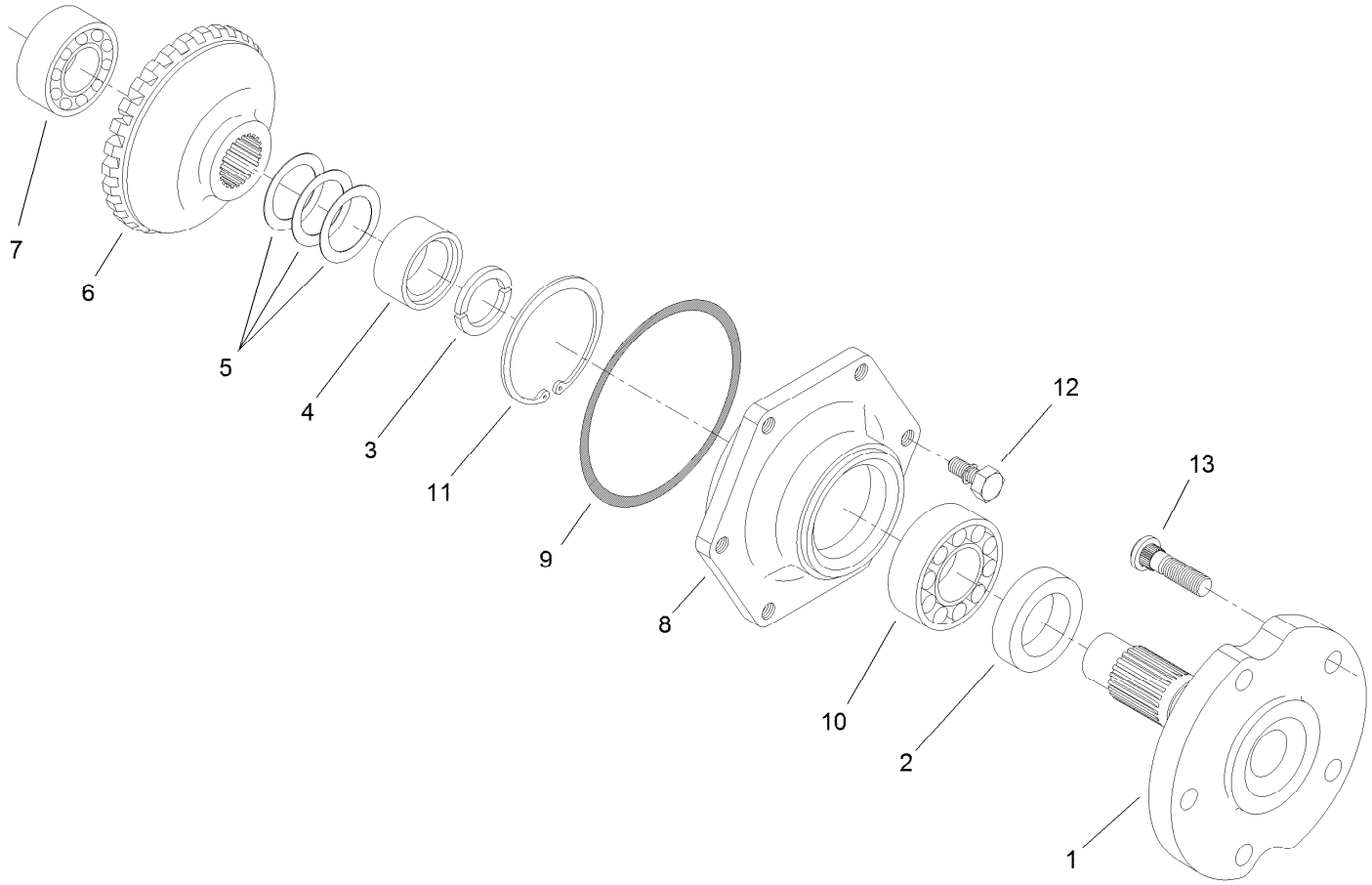


# Axle Assembly
# Rear Axle Assembly No. 110-4750

| *Ref.* | *Part Number* | *Qty.* | *Description* |
|---|---|---|---|
| 1 | 95-7522 | 2 | Axle |
| 2 | 99-7564 | 2 | Seal-Oil |
| 3 | 95-7544 | 4 | Clip |
| 4 | 95-7523 | 2 | Spacer |
| 5 | 99-7555 | 2 | Shim 0.3 |
| 5 | 99-7556 | 2 | Shim 0.2 |
| 5 | 99-7557 | 2 | Shim 0.5 |
| 6 | 95-7524 | 2 | Gear-Bevel, 29 Tooth |
| 7 | 99-7534 | 2 | Bearing-Ball |
| 8 | 95-7521 | 2 | Cover-Axle |
| 9 | 106-1071 | 2 | O-Ring |
| 10 | 99-7561 | 2 | Bearing-Ball |
| 11 | 99-7539 | 2 | Clip |
| 12 | 99-7596 | 12 | Bolt |
| 13 | 99-7563 | 10 | Stud |

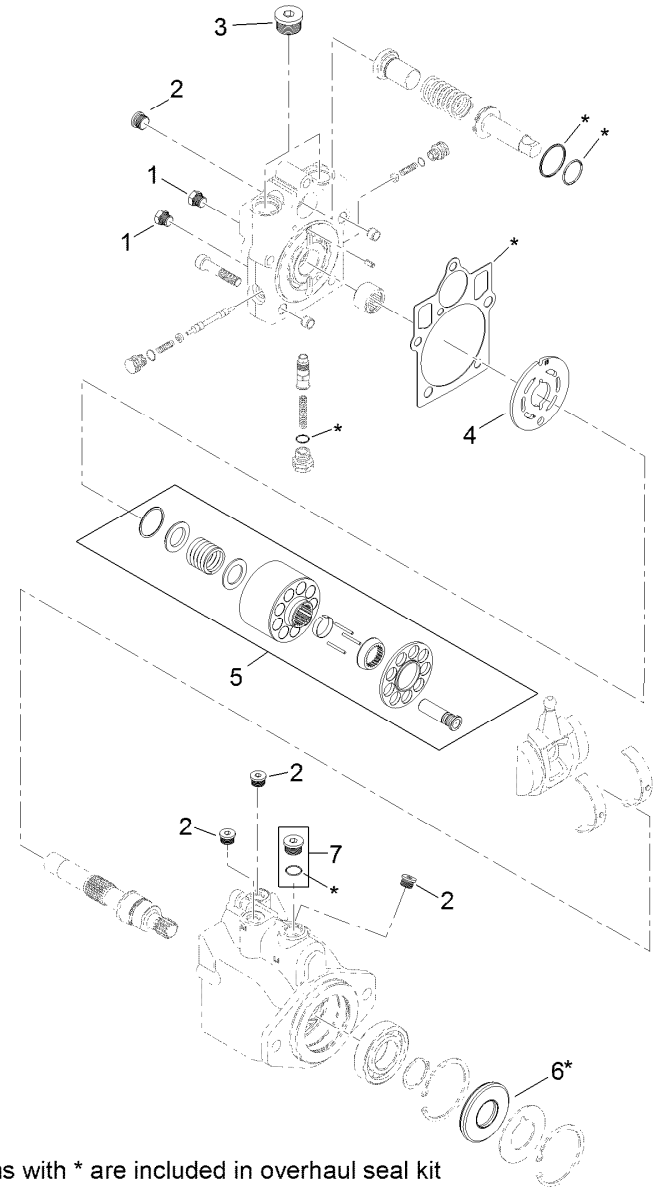


8 = all items with * are included in overhaul seal kit

# Hydraulic Motor Assembly No. 120-8814

| *Ref.* | *Part Number* | *Qty.* | *Description* |
|---|---|---|---|
| 1 | 92-1352 | 2 | Plug |
| 2 | 69-3080 | 5 | Plug |
| 3 | 69-3130 | 2 | Plug |
| 4 | 121-1734 | 1 | Plate-Valve |
| 5 | 110-6472 | 1 | Cylinder Block Kit ASM |
| 6 | 69-3190 | 1 | Seal-Lip |
| 7 | 67-9090 | 1 | Plug |
| 8 | 121-1736 | 1 | Overhaul Seal Kit |

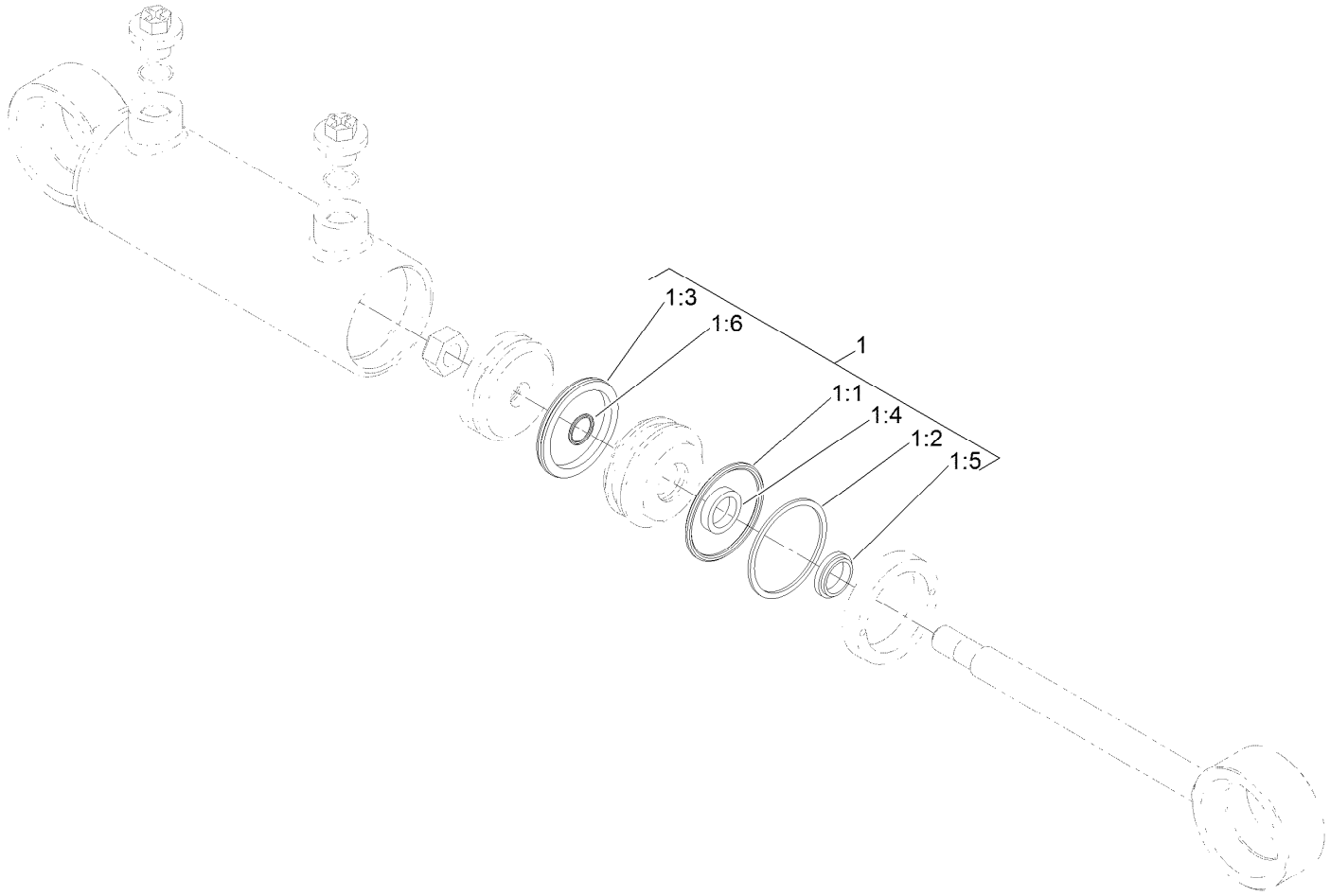


# Steering Cylinder Assembly No. 121-1534

| *Ref.* | *Part Number* | *Qty.* | *Description* |
|---|---|---|---|
| 1 | 125-4302 | 1 | Seal Kit |
| 1:1 | | 1 | O-Ring ● |
| 1:2 | | 1 | Backup ● |
| 1:3 | | 1 | Bp Seal ● |
| 1:4 | | 1 | Bt Seal ● |
| 1:5 | | 1 | Dust Seal ● |
| 1:6 | | 1 | O-Ring ● |

● Not serviced separately

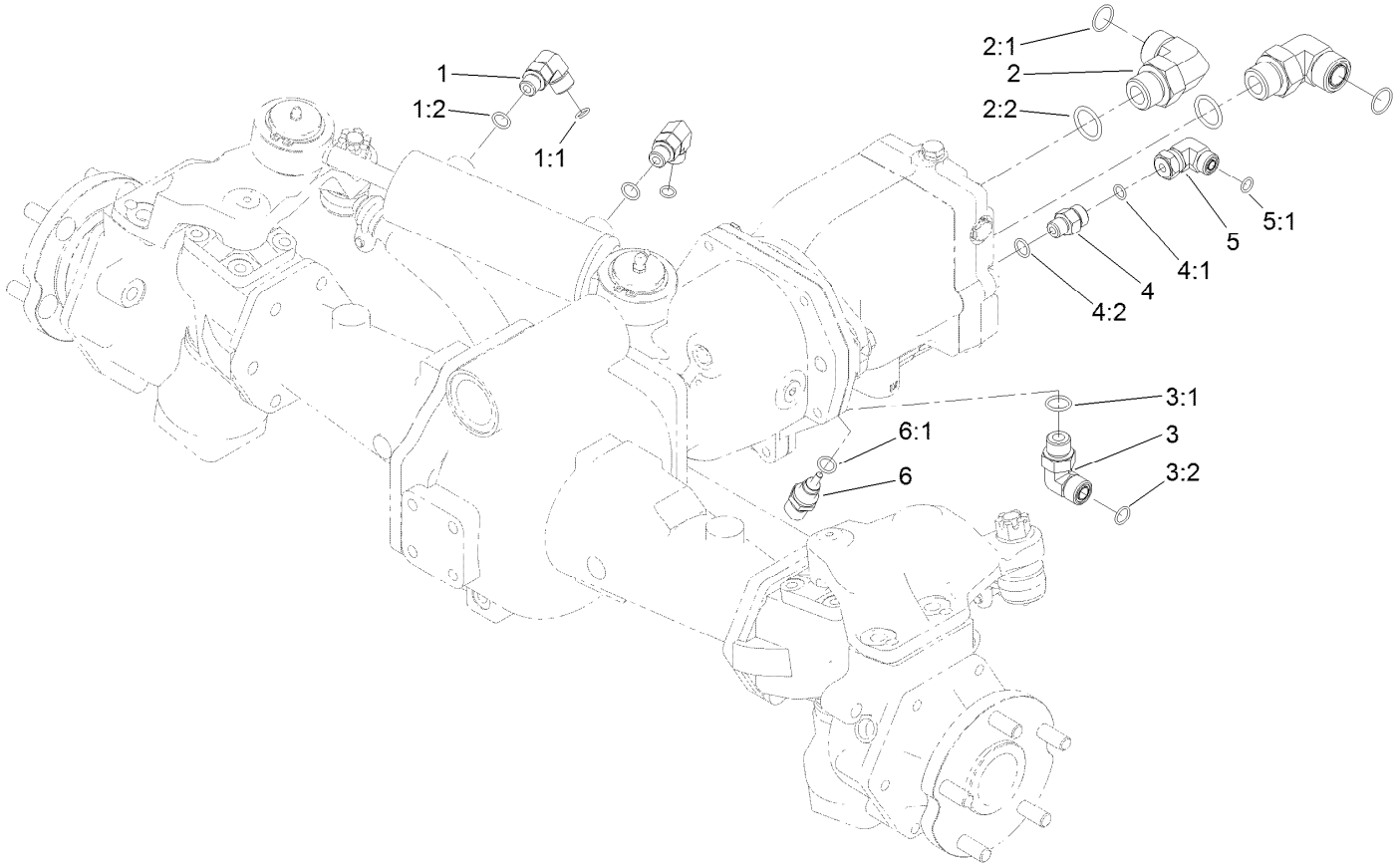


# Hydraulic Fitting Assembly

| Ref. | Part Number | Qty. | Description |
|---|---|---|---|
| 1 | 340-77 | 2 | Fitting-Elbow, 90 DEG |
| 1:1 | 237-22 | 1 | O-Ring |
| 1:2 | 237-42 | 1 | O-Ring |
| 2 | 340-142 | 2 | Fitting-Elbow, 90 DEG |
| 2:1 | 237-58 | 1 | O-Ring |
| 2:2 | 237-81 | 1 | O-Ring |
| 3 | 340-98 | 1 | Fitting-Elbow, 90 DEG |
| 3:1 | 237-79 | 1 | O-Ring |

| Ref. | Part Number | Qty. | Description |
|---|---|---|---|
| 3:2 | 237-30 | 1 | O-Ring |
| 4 | 340-2 | 1 | Fitting-Straight |
| 4:1 | 237-22 | 1 | O-Ring |
| 4:2 | 237-42 | 1 | O-Ring |
| 5 | 340-159 | 1 | Elbow-90 |
| 5:1 | 237-22 | 2 | O-Ring |
| 6 | 110-8829 | 1 | Sender-Temperature |
| 6:1 | 237-42 | 1 | O-Ring |

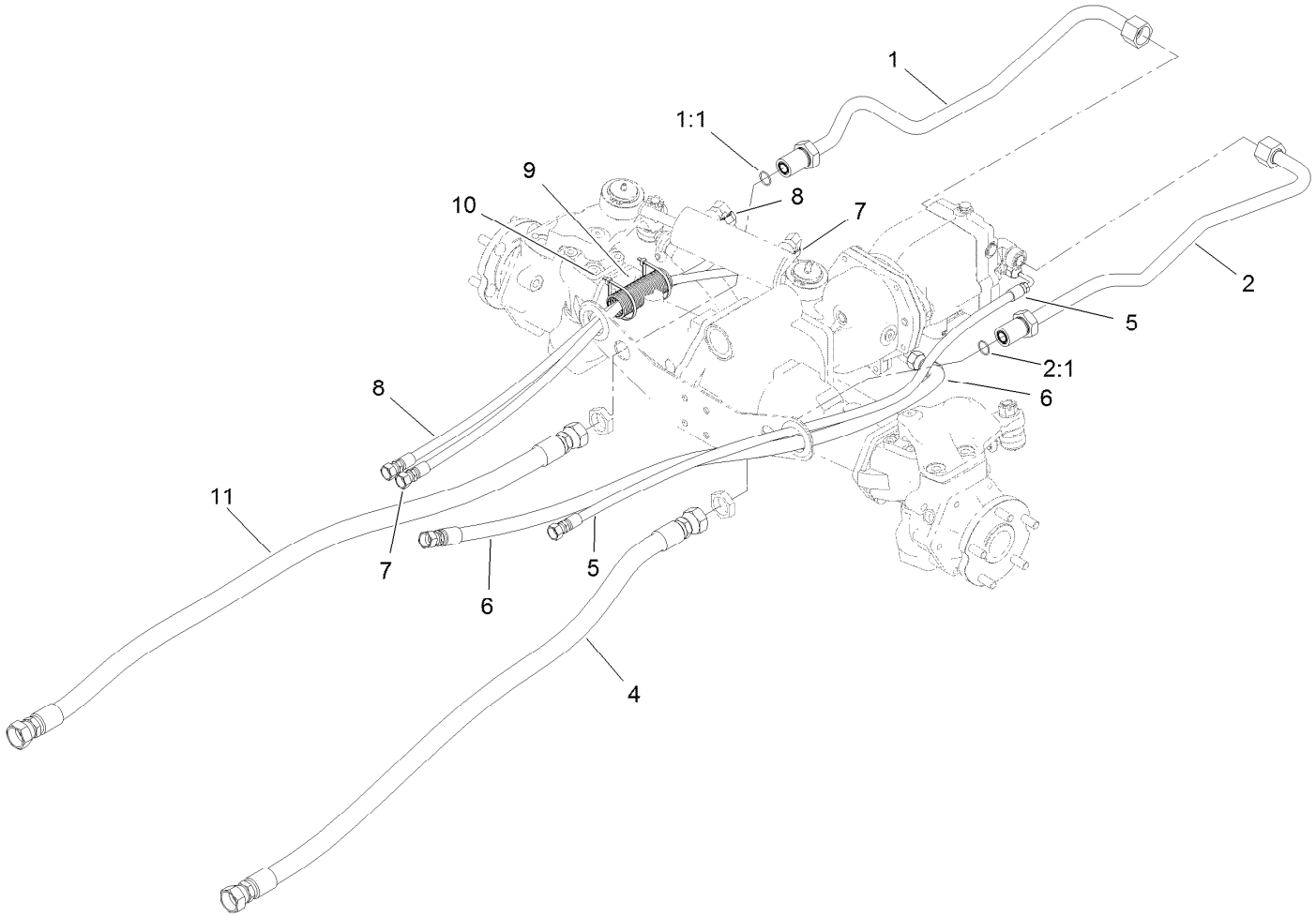


# Hose and Tube Routing Assembly

| *Ref.* | *Part Number* | *Qty.* | *Description* |
|---|---|---|---|
| 1 | 120-9067 | 1 | HYD Tube ASM |
| 1:1 | 237-58 | 1 | O-Ring |
| 2 | 120-9068 | 1 | Tube ASM |
| 2:1 | 237-58 | 1 | O-Ring |
| 4 | 114-0024 | 1 | Hose-HYD |
| 5 | 121-1459 | 1 | Hose-HYD |
| 6 | 121-1458 | 1 | Hose-HYD |
| 7 | 121-1500 | 1 | Hose-HYD |
| 8 | 121-1501 | 1 | Hose-HYD |
| 9 | 121-1544 | 2 | Cover-Hose |
| 10 | 3290-379 | 4 | Tie-Cable |
| 11 | 121-1683 | 1 | Hose-HYD |

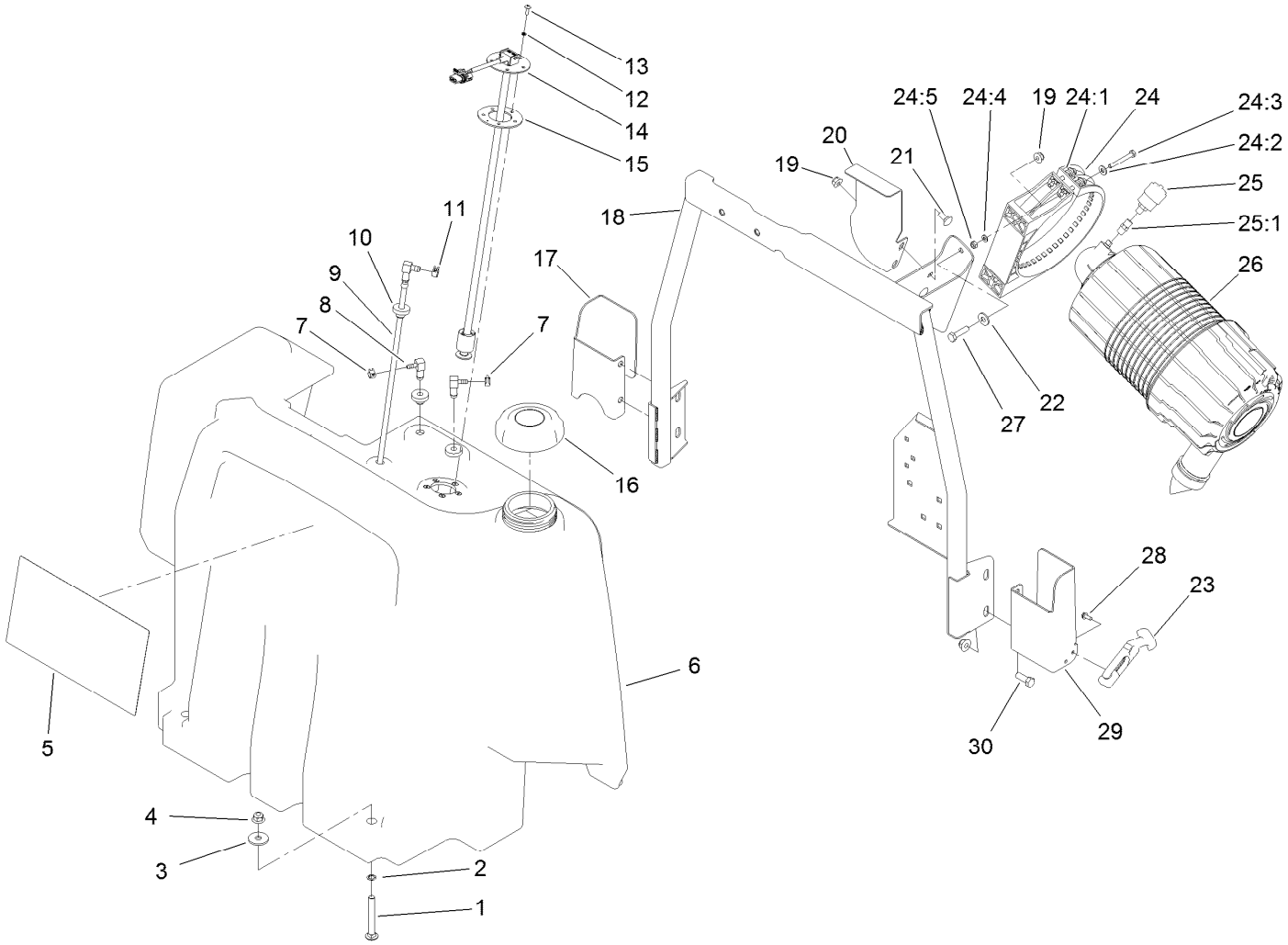


# Fuel Tank and Air Cleaner Assembly

| Ref. | Part Number | Qty. | Description |
|---|---|---|---|
| 1 | 3231-10 | 2 | Screw-CARR |
| 2 | 32151-72 | 2 | Ring-Retaining |
| 3 | 63-8410 | 2 | Washer |
| 4 | 104-8301 | 6 | Nut-HF, NI |
| 5 | 137-5495 | 1 | Decal-Service |
| 6 | 120-4195 | 1 | Tank-Fuel |
| 7 | 2412-98 | 2 | Clamp-Hose |
| 8 | 104-5228 | 2 | Fitting-Elbow, 90 DEG |
| 9 | 120-8908 | 1 | Pipe-Stand |
| 10 | 46-6560 | 3 | Bushing |
| 11 | 92-2379 | 1 | Clamp-Hose |
| 12 | 3253-15 | 5 | Washer-Lock |
| 13 | 32122-24 | 5 | Screw-PTH |
| 14 | 121-1688 | 1 | Gauge-Fuel |
| 15 | 121-1707 | 1 | Gasket-Fuel, Viton |
| 16 | 125-9171 | 1 | Cap-Fuel |
| 17 | 121-1514-03 | 1 | Bracket-Latch, RH |
| 18 | 120-4190-03 | 1 | Support-Tank |

| Ref. | Part Number | Qty. | Description |
|---|---|---|---|
| 19 | 104-8300 | 4 | Nut-HF, NI |
| 20 | 120-4193-03 | 1 | Bracket-Fuel Tank |
| 21 | 3230-1 | 2 | Bolt-CARR |
| 22 | 3256-3 | 2 | Washer-Flat |
| 23 | 103-4080 | 2 | Latch-Rubber |
| 24 | 99-5414 | 1 | Strap-Cleaner, Air |
| 24:1 | 108-1512 | 2 | Spring |
| 24:2 | 3256-22 | 2 | Washer-Flat |
| 24:3 | 33113-050 | 2 | Screw-HH |
| 24:4 | 33093-00 | 2 | Washer-Flat |
| 24:5 | 33023-00 | 2 | Nut-Lock |
| 25 | 104-3563 | 1 | Indicator |
| 25:1 | 94-1416 | 1 | Adapter-Indicator |
| 26 | 99-5410 | 1 | Air Cleaner ASM |
| 27 | 322-6 | 2 | Screw-HH |
| 28 | 32144-1 | 4 | Screw-Taptite |
| 29 | 121-1513-03 | 1 | Bracket-Latch, LH |
| 30 | 323-6 | 4 | Screw-HH |

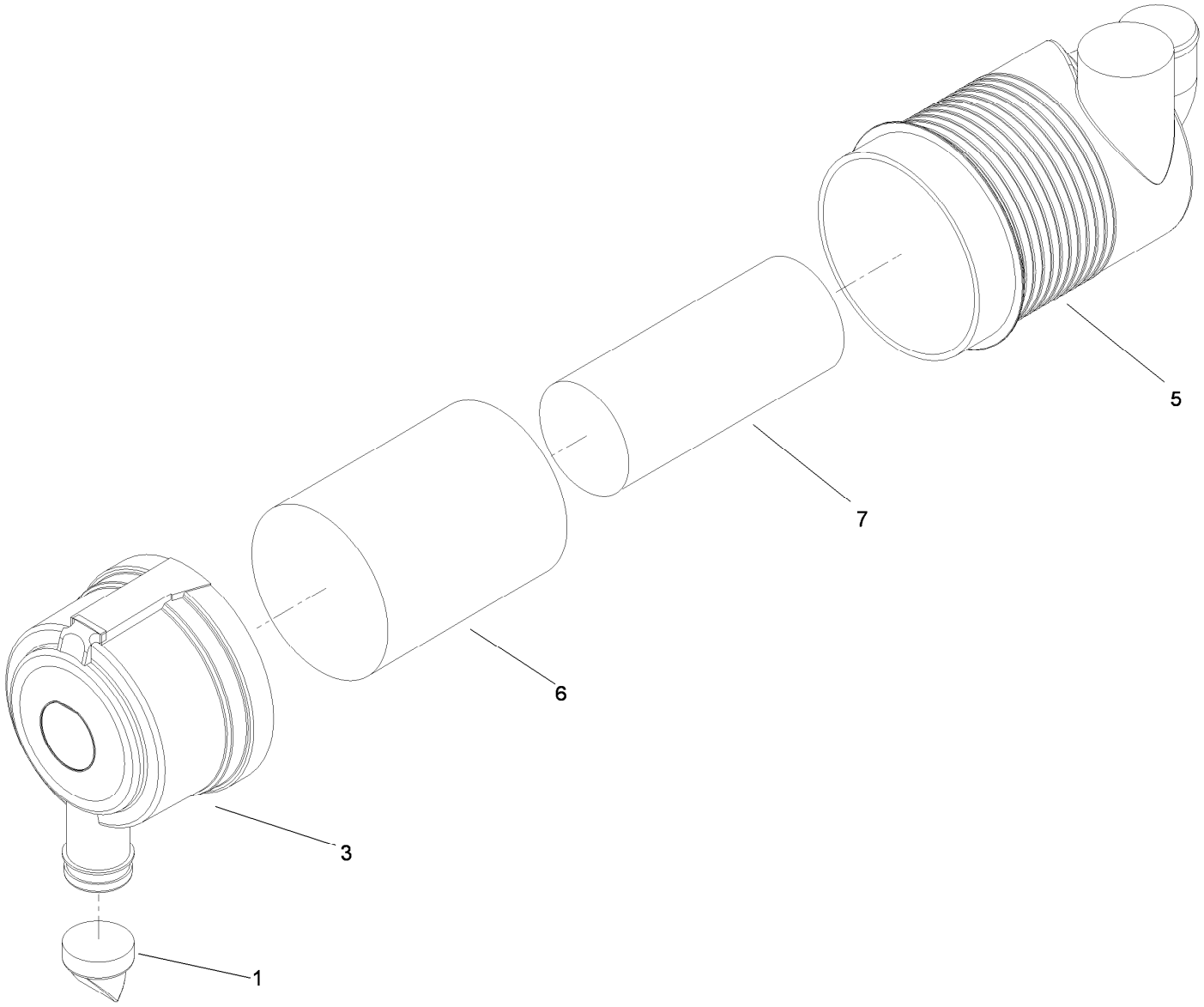


# Air Cleaner Assembly No. 99-5410

| *Ref.* | *Part Number* | *Qty.* | *Description* |
|---|---|---|---|
| 1 | 104-4258 | 1 | Valve-Vacuator |
| 3 | 104-4259 | 1 | Cover |
| 5 | | 1 | Body ASM ● |
| 6 | 108-3814 | 1 | Filter-Air |
| 7 | 108-3816 | 1 | Filter-Air |

● Not serviced separately

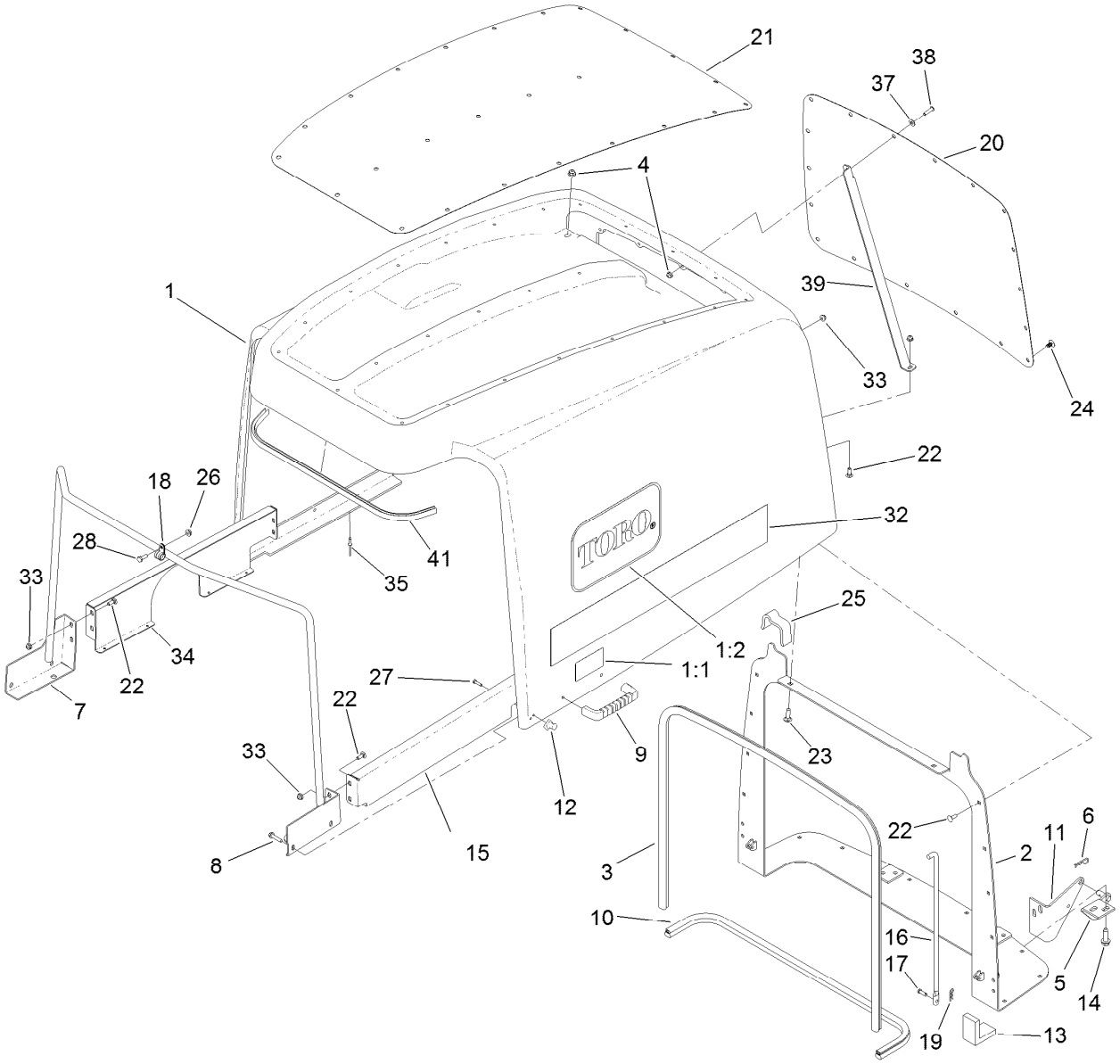


# Hood Assembly

| Ref. | Part Number | Qty. | Description |
|---|---|---|---|
| 1 | 120-9090 | 1 | Hood ASM |
| 1:1 | 106-6754 | 2 | Decal-Danger |
| 1:2 | 66-1210 | 2 | Decal |
| 2 | 120-9099-03 | 1 | Pivot-Hood |
| 3 | 114-3823 | 1 | Seal-Bulb |
| 4 | 104-8300 | 2 | Nut-HF, NI |
| 5 | 121-1470 | 2 | Pivot-Screen |
| 6 | 3290-467 | 2 | Pin-Hair |
| 7 | 120-4196-03 | 1 | Support-Hood |
| 8 | 46-8092 | 4 | Screw-Plastite |
| 9 | 65-5100 | 2 | Handle-Door |
| 10 | 104-3590 | 1 | Seal-Bulb |
| 11 | 104-3588-03 | 2 | Pivot-Screen |
| 12 | 103-4081 | 2 | Latch-Keeper |
| 13 | 104-3580 | 2 | Seal-Corner, Screen |
| 14 | 32144-109 | 8 | Screw-Thd |
| 15 | 120-8949-03 | 1 | Support-Hood, LH |
| 16 | 104-8313 | 2 | Rod-Hood |
| 17 | 283-67 | 2 | Pin-Clevis |

| Ref. | Part Number | Qty. | Description |
|---|---|---|---|
| 18 | 2412-134 | 2 | Clamp-R |
| 19 | 3290-307 | 2 | Pin-Cotter |
| 20 | 120-9096-03 | 1 | Screen-Hood, Rear |
| 21 | 120-9097-03 | 1 | Screen-Hood, Top |
| 22 | 3229-1 | 24 | Screw-CARR |
| 23 | 3230-2 | 2 | Bolt-CARR |
| 24 | 117-2382 | 42 | Plug-Plastic |
| 25 | 120-9087 | 2 | Seal-Foam |
| 26 | 32128-33 | 2 | Nut-HF |
| 27 | 32104-4 | 2 | Screw |
| 28 | 321-4 | 2 | Screw-HH |
| 32 | 105-7360 | 2 | Decal-Hood |
| 33 | 104-7201 | 25 | Nut-HF |
| 34 | 120-8948-03 | 1 | Support-Hood, RH |
| 35 | 3269-4 | 8 | Rivet-Pop |
| 37 | 3256-1 | 1 | Washer-Flat |
| 38 | 3274-65 | 1 | Screw-HSBH |
| 39 | 127-3707-03 | 1 | Support-Hood |
| 41 | 132-6181 | 1 | Trim |

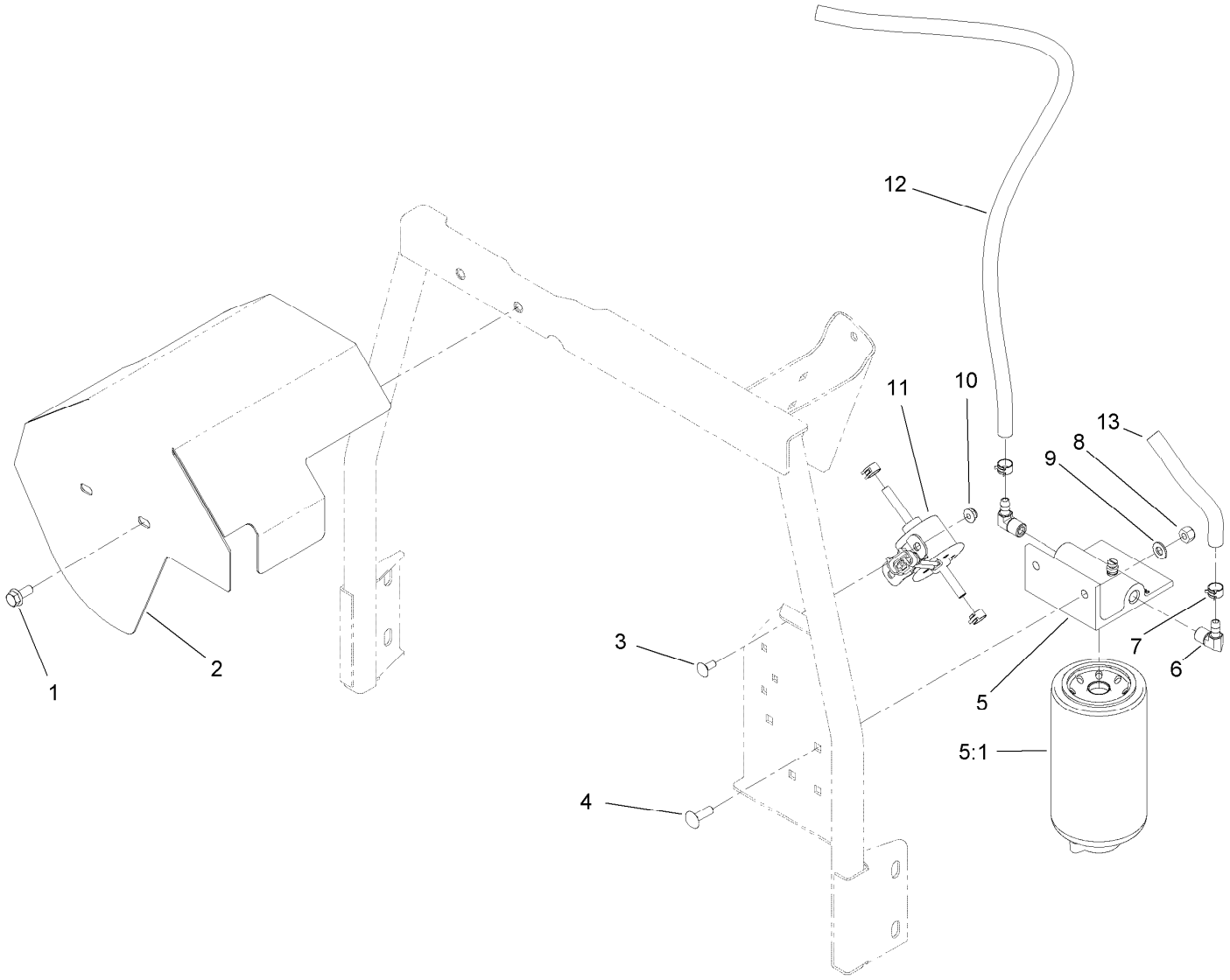


# Fuel/Water Separator and Shield Assembly

| *Ref.* | *Part Number* | *Qty.* | *Description* |
|---|---|---|---|
| 1 | 3234-47 | 2 | Screw-HHF |
| 2 | 120-4188-03 | 1 | Bracket-Guard, Fuel Tank |
| 3 | 3229-11 | 2 | Screw-CARR |
| 4 | 3230-22 | 2 | Screw-CARR |
| 5 | 125-2914 | 1 | Filter-Separator |
| 5:1 | 125-2915 | 1 | Filter-Fuel/Water Separator |
| 6 | 353-781 | 2 | Fitting-HYD, 90 |
| 7 | 92-2379 | 4 | Clamp-Hose |
| 8 | 3296-29 | 2 | Nut-Lock, NI |
| 9 | 3256-23 | 2 | Washer-Plain |
| 10 | 104-7201 | 2 | Nut-HF |
| 11 | 121-5613 | 1 | Pump-Fuel, Electric |
| 12 | 109-0309 | 1 | Hose-Fuel |
| 13 | 110-3256 | 1 | Hose-Fuel |

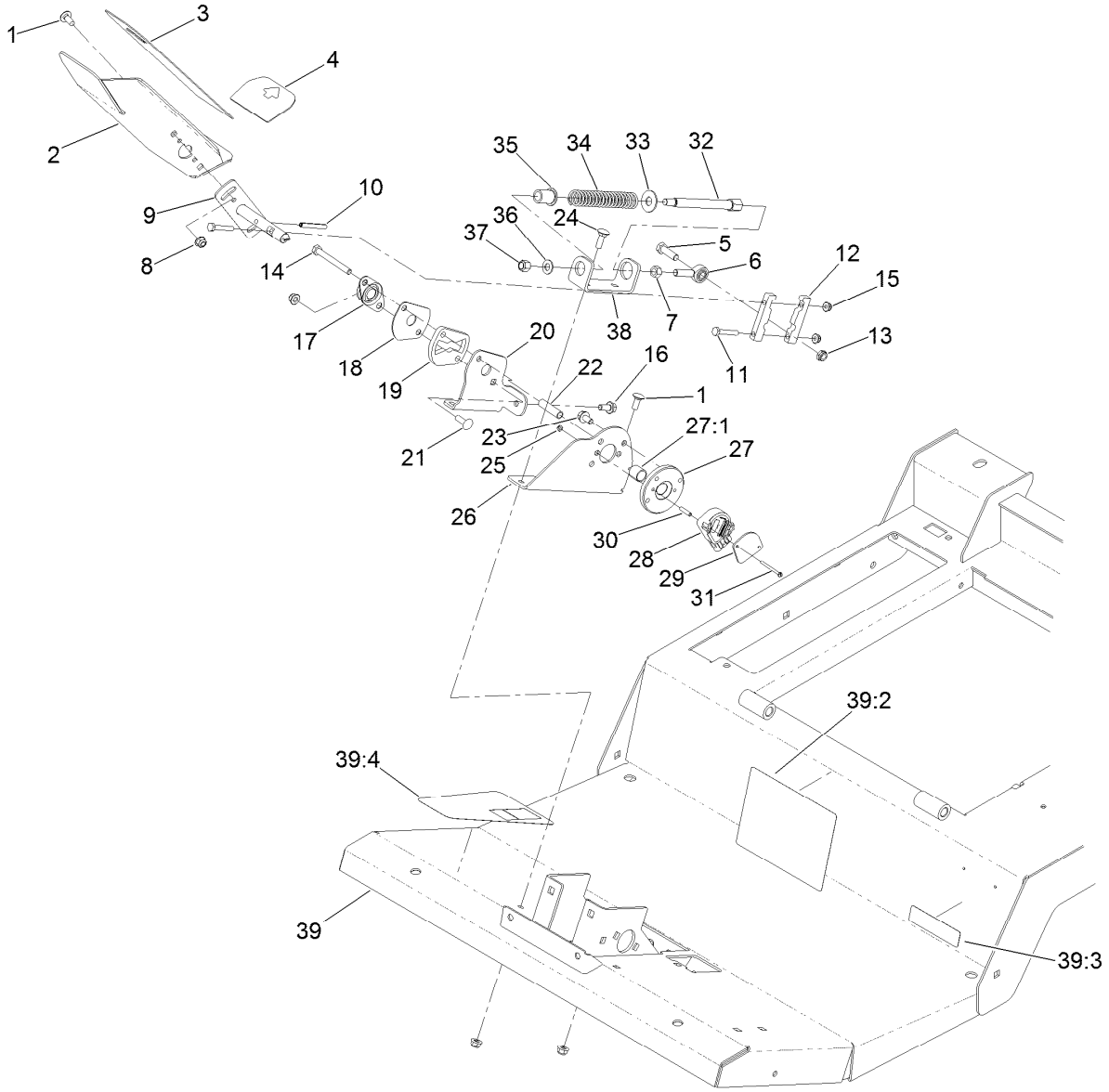


# Traction Pedal and Platform Assembly

| Ref. | Part Number | Qty. | Description |
|---|---|---|---|
| 1 | 3230-23 | 5 | Screw-CARR |
| 2 | 136-4368-01 | 1 | Pedal-Traction |
| 3 | 93-5347 | 1 | Abrasive-Pedal |
| 4 | 93-5368 | 1 | Abrasive-Pedal |
| 5 | 323-7 | 1 | Screw-HH |
| 6 | 2411-36 | 1 | Bearing-End, Rod |
| 7 | 3219-3 | 1 | Nut-Hex |
| 8 | 104-8300 | 9 | Nut-HF, NI |
| 9 | 131-2245 | 1 | Shaft-Pedal, Traction |
| 10 | 32121-78 | 1 | Pin-Roll |
| 11 | 321-37 | 2 | Screw-HH |
| 12 | 117-5459 | 2 | Block-Clamp |
| 13 | 3296-59 | 1 | Nut-Lock, NI |
| 14 | 322-14 | 1 | Screw-HH |
| 15 | 104-7201 | 2 | Nut-HF |
| 16 | 3234-47 | 1 | Screw-HHF |
| 17 | 256-236 | 1 | Bearing-Mount, Flange |
| 18 | 117-5455 | 1 | Plate-Cover |
| 19 | 117-5454 | 1 | Plate-Butterfly |
| 20 | 131-2250-01 | 1 | Bracket-Butterfly |
| 21 | 3230-22 | 1 | Screw-CARR |
| 22 | 93-7960 | 1 | Spacer |
| 23 | 114-7728 | 2 | Screw-HF |
| 24 | 3230-2 | 2 | Bolt-CARR |
| 25 | 3296-9 | 2 | Nut-Hex |
| 26 | 136-4384-01 | 1 | Bracket-Sender |
| 27 | 117-5445 | 1 | Bushing Hub ASM |
| 27:1 | 95-7497 | 1 | Bushing-Wheel |
| 28 | 114-5609 | 1 | Sensor-Position |
| 29 | 114-5595 | 1 | Plate-Capture |
| 30 | 114-5608 | 2 | Spacer-Standoff |
| 31 | 32105-25 | 2 | Screw-SHH |
| 32 | 117-5446 | 1 | Shaft-Spring |
| 33 | 3256-5 | 1 | Washer-Flat |
| 34 | 84-9100 | 1 | Spring |
| 35 | 92-7610 | 1 | Retainer-Spring |
| 36 | 3256-24 | 1 | Washer-Flat |
| 37 | 3296-6 | 1 | Nut-Lock |
| 38 | 131-2252-01 | 1 | Bracket-Spring |
| 39 | 132-6251 | 1 | Platform ASM |
| 39:2 | 114-0846 | 1 | Decal-Instructions, Operating |

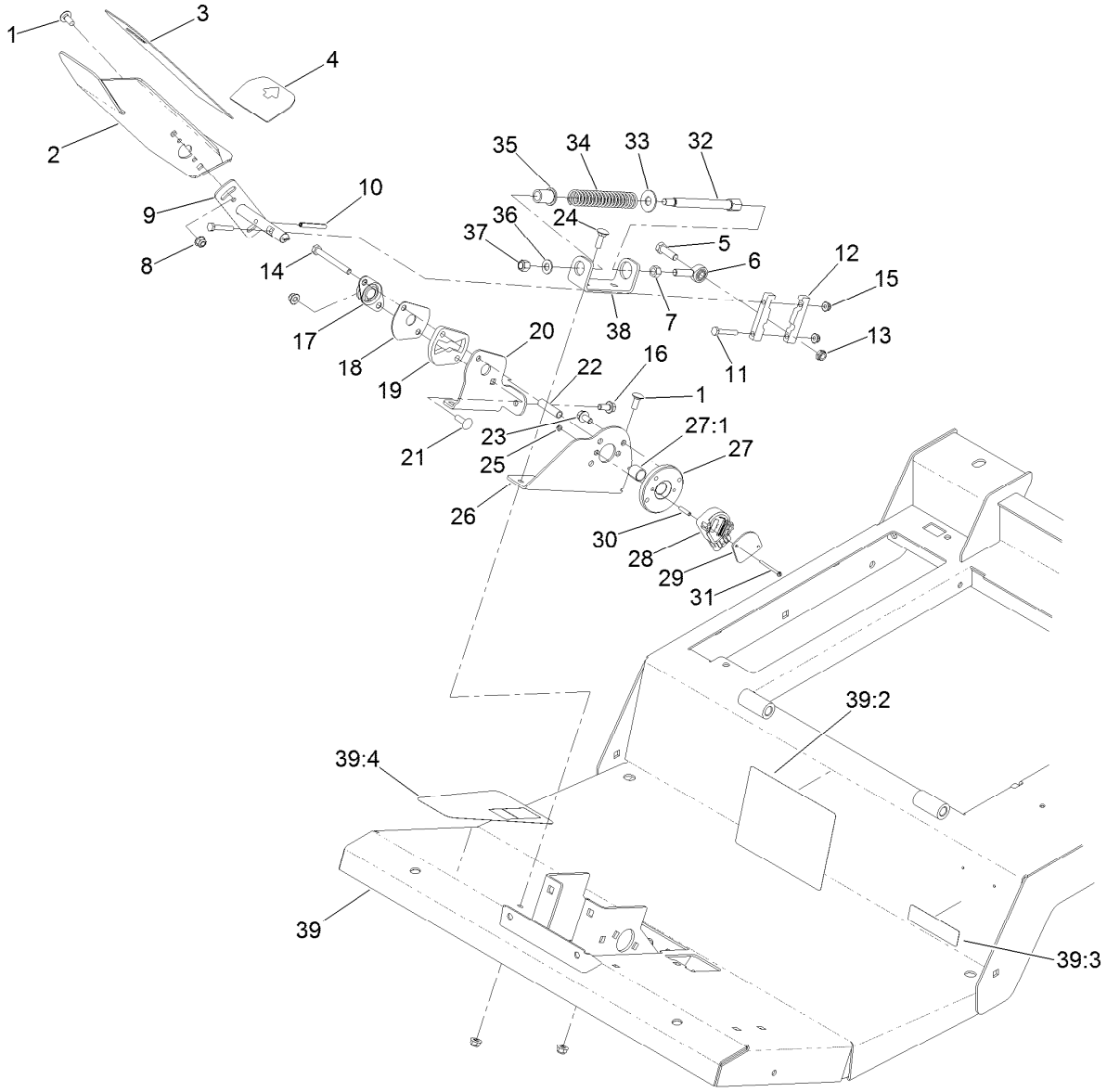


# Traction Pedal and Platform Assembly (continued)

| *Ref.* | *Part Number* | *Qty.* | *Description* |
|---|---|---|---|
| 39:3 | 133-8062 | 1 | Decal-Arrestor, Spark |
| 39:4 | 114-0849 | 1 | Decal-Pedal, Traction |

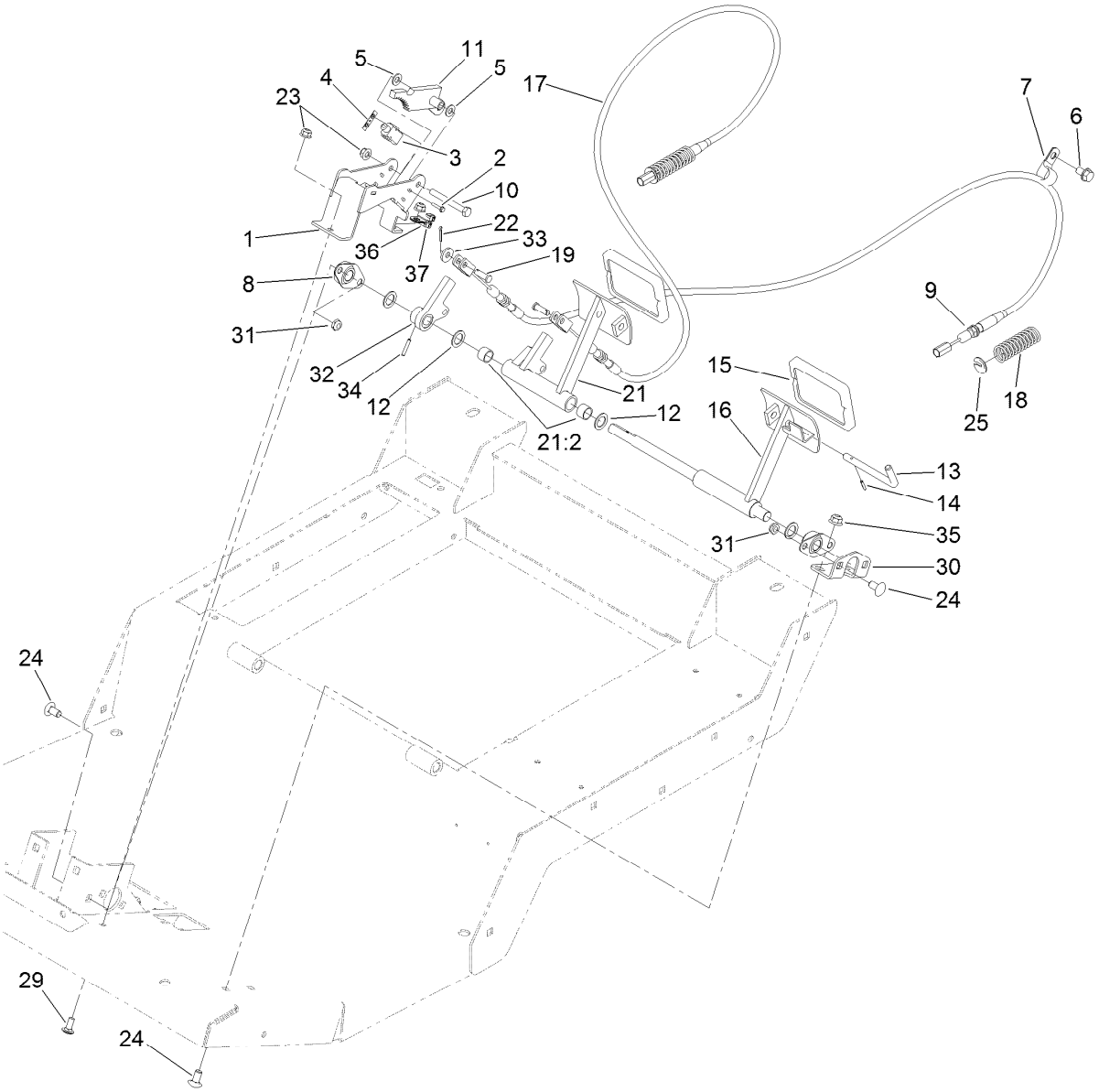


# Brake Pedal Assembly

| Ref. | Part Number | Qty. | Description |
|---|---|---|---|
| 1 | 132-6259-03 | 1 | Mount-Switch |
| 2 | 117-5458 | 4 | Screw-HHF |
| 3 | 99-3410 | 2 | Switch |
| 4 | 108-9824 | 2 | Nut-Switch |
| 5 | 3256-23 | 2 | Washer-Plain |
| 6 | 32144-69 | 2 | Screw-HWHTF |
| 7 | 2412-4 | 2 | Clamp-R |
| 8 | 256-236 | 2 | Bearing-Mount, Flange |
| 9 | 120-8899 | 1 | Cable-Brake, LH |
| 10 | 322-13 | 1 | Screw-HH |
| 11 | 132-6290-03 | 1 | Rack |
| 12 | 3256-69 | 4 | Washer-Flat |
| 13 | 63-7880 | 1 | Pin-Latch, Brake |
| 14 | 32121-50 | 1 | Pin-Spring |
| 15 | 93-8742 | 2 | Footpad-Brake |
| 16 | 132-6288-01 | 1 | Pedal-Brake, LH |
| 17 | 120-8898 | 1 | Cable-Brake, RH |

| Ref. | Part Number | Qty. | Description |
|---|---|---|---|
| 18 | 94-3088 | 2 | Spring-Compression |
| 19 | 120-9694 | 2 | Pin-Clevis |
| 21 | 132-6252 | 1 | Pedal-Brake, RH |
| 21:2 | 256-42 | 2 | Bushing |
| 22 | 3272-6 | 2 | Pin-Cotter |
| 23 | 104-8300 | 3 | Nut-HF, NI |
| 24 | 3231-21 | 6 | Screw-CARR |
| 25 | 94-3050 | 2 | Plate-Spring |
| 29 | 3230-23 | 2 | Screw-CARR |
| 30 | 132-6247-01 | 1 | Mount-Bearing |
| 31 | 3296-59 | 4 | Nut-Lock, NI |
| 32 | 132-6229 | 1 | Arm-Cable, Brake |
| 33 | 4-2390 | 2 | Washer-Flat |
| 34 | 32121-125 | 1 | Pin-Spring |
| 35 | 104-8301 | 2 | Nut-HF, NI |
| 36 | 88-7970 | 1 | Clip |
| 37 | 1-303287 | 2 | Tie-Cable |

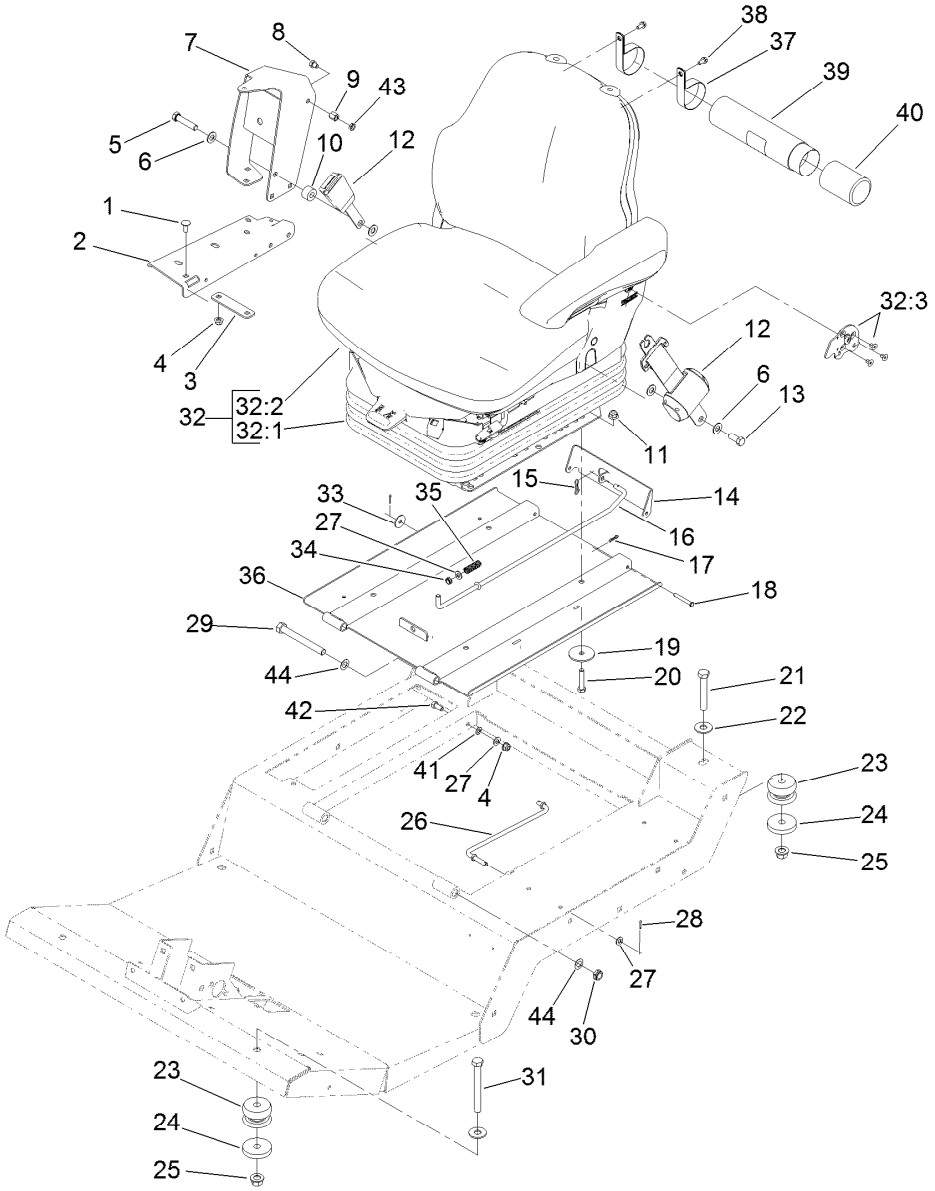


# Seat Base and Seat Assembly

| Ref. | Part Number | Qty. | Description |
|---|---|---|---|
| 1 | 3230-23 | 6 | Screw-CARR |
| 2 | 119-0000-03 | 1 | Channel-Support |
| 3 | 112-7449-03 | 1 | Bracket-Support |
| 4 | 104-8300 | 7 | Nut-HF, NI |
| 5 | 3212-8 | 1 | Screw-HH |
| 6 | 3256-25 | 4 | Washer-Flat |
| 7 | 117-4798-03 | 1 | Arm-Support |
| 8 | 108-8646 | 1 | Screw-HH, Lock |
| 9 | 112-7405 | 1 | Nut-Hex, Coupling |
| 10 | 17-7190 | 1 | Spacer-Finger |
| 11 | 104-8301 | 4 | Nut-HF, NI |
| 12 | 110-0413 | 1 | Seatbelt-Retractable |
| 13 | 3212-4 | 1 | Screw-HH |
| 14 | 120-9017-03 | 1 | Latch-Seat |
| 15 | 119-1415 | 1 | Pin-Cotter, Locking |
| 16 | 120-9018 | 1 | Rod-Latch |
| 17 | 119-1414 | 2 | Pin-Cotter, Locking |
| 18 | 283-57 | 2 | Pin-Clevis |
| 19 | 83-1040 | 4 | Washer-Flat |
| 20 | 323-9 | 4 | Screw-HH |
| 21 | 112-7264 | 2 | Screw-HH |

| Ref. | Part Number | Qty. | Description |
|---|---|---|---|
| 22 | 3256-6 | 4 | Washer-Flat |
| 23 | 110-5954 | 4 | Mount-Center, Bonded |
| 24 | 115-5519 | 4 | Washer-Plain |
| 25 | 99-5107 | 4 | Nut-Lock |
| 26 | 93-5338 | 1 | Rod-Prop |
| 27 | 3256-23 | 3 | Washer-Plain |
| 28 | 3272-5 | 2 | Pin-Cotter |
| 29 | 325-18 | 2 | Screw-HH |
| 30 | 3296-45 | 2 | Nut-Hex |
| 31 | 702093 | 2 | Screw-HH |
| 32 | 130-2701 | 1 | Seat And Suspension ASM |
| 32:1 | 130-2702 | 1 | Air Ride Seat Suspension |
| 32:2 | 117-5676 | 1 | Premium Seat ASM |
| 32:3 | 132-1304 | 1 | Backrest Adjustment Kit |
| 33 | 3256-82 | 1 | Washer-Flat |
| 34 | 5979 | 1 | Bushing-Nyliner |
| 35 | 95-1821-03 | 1 | Spring-Compression |
| 36 | 137-5475-03 | 1 | Plate-Seat |
| 37 | 2412-133 | 2 | Clamp-R |
| 38 | 32104-116 | 2 | Screw-HWHTF |
| 39 | 104-7050 | 1 | Tube-Manual |

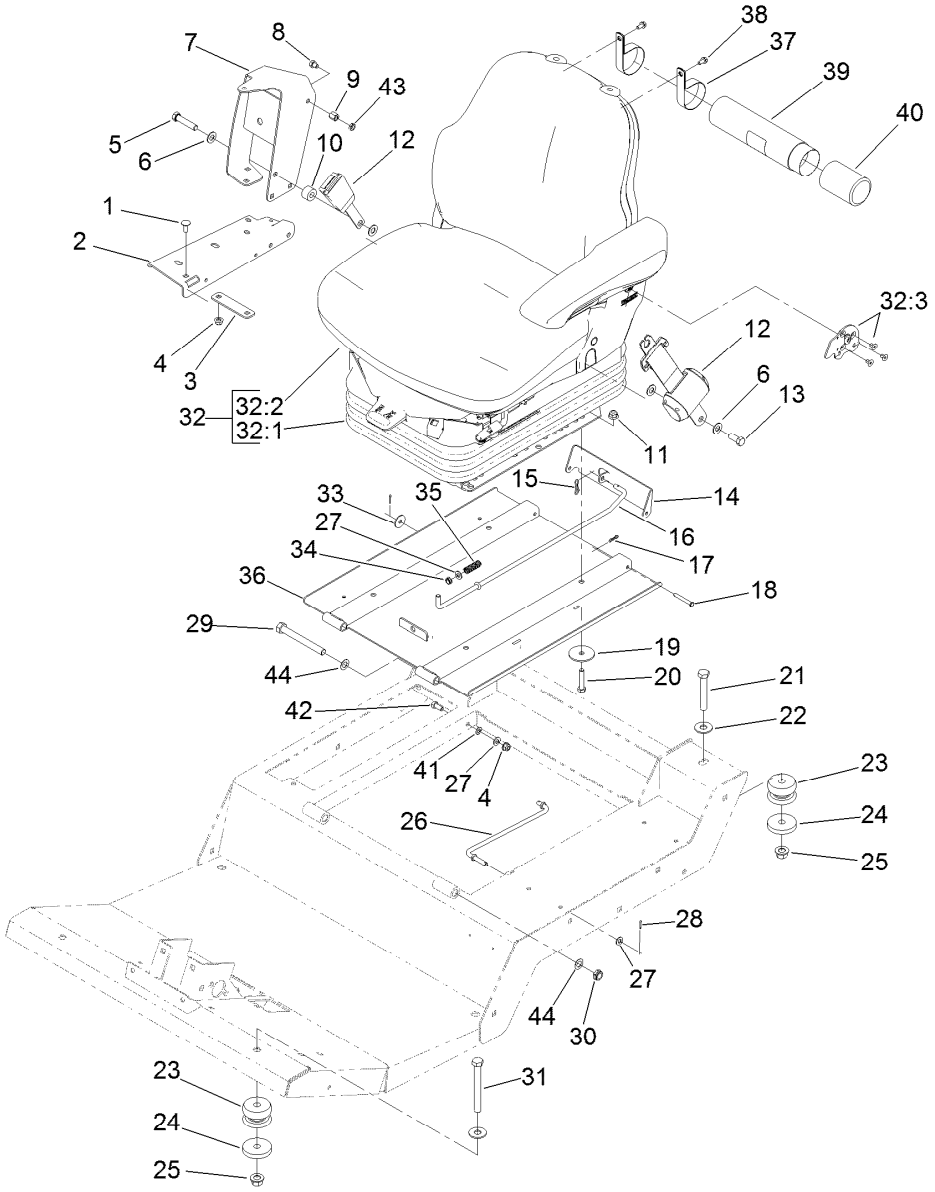


# Seat Base and Seat Assembly (continued)

| Ref. | Part Number | Qty. | Description |
|---|---|---|---|
| 40 | 104-7048 | 1 | Cap-Housing |
| 41 | 3255-8 | 1 | Washer-Lock |
| 42 | 322-3 | 1 | Screw-HH |
| 43 | 117-4059 | 1 | Nut-Hex |
| 44 | 36-4780 | 4 | Washer-Plain |

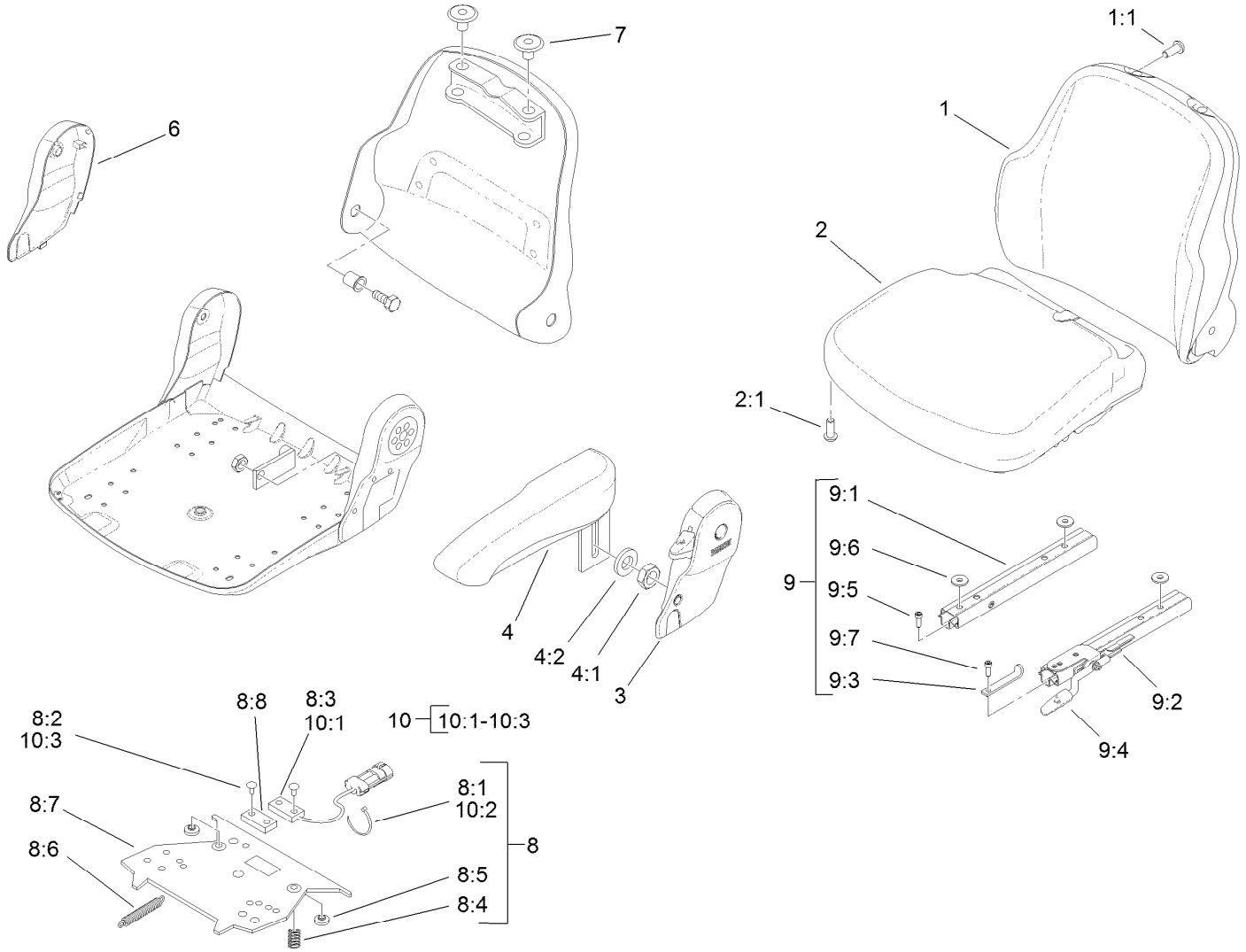


# Vinyl Premium Seat Assembly No. 117-5676

| Ref. | Part Number | Qty. | Description |
|---|---|---|---|
| 1 | 108-8016 | 1 | Backrest Cushion ASM |
| 1:1 | 119-7742 | 4 | Screw-Cushion |
| 2 | 108-8017 | 1 | Seat Cushion ASM |
| 2:1 | 119-7742 | 3 | Screw-Cushion |
| 3 | 108-8018 | 1 | Cover-Armrest |
| 4 | 108-8019 | 1 | LH Armrest ASM |
| 4:1 | 82-9650 | 1 | Nut |
| 4:2 | 107-1198 | 1 | Washer |
| 6 | 108-8021 | 1 | Cover-Armrest |
| 7 | 108-8022 | 2 | Cover-Black |
| 8 | 108-8024 | 1 | Switch Kit |
| 8:1 | | 3 | Wire Tie ● |
| 8:2 | | 4 | Rivet ● |
| 8:3 | | 1 | Sensor-Seat Switch ● |
| 8:4 | | 2 | Spring-Compression ● |
| 8:5 | | 2 | Bumper-Pressure Plate ● |

| Ref. | Part Number | Qty. | Description |
|---|---|---|---|
| 8:6 | | 1 | Spring-Extension ● |
| 8:7 | | 1 | Plate-Mounting ● |
| 8:8 | | 1 | Magnet ● |
| 9 | 108-8025 | 1 | Adjustment Rail Set |
| 9:1 | | 1 | Rail-Adjustment, RH ● |
| 9:2 | | 1 | Rail-Adjustment, LH ● |
| 9:3 | | 1 | Stop-Rail ● |
| 9:4 | | 1 | Handle ● |
| 9:5 | | 3 | Screw ● |
| 9:6 | | 3 | Washer ● |
| 9:7 | | 1 | Screw ● |
| 10 | 110-6189 | 1 | Switch Kit |
| 10:1 | | 1 | Switch ● |
| 10:2 | | 3 | Wire Tie ● |
| 10:3 | | 2 | Rivet ● |

● Not serviced separately

# Seat Suspension Assembly No. 130-2702

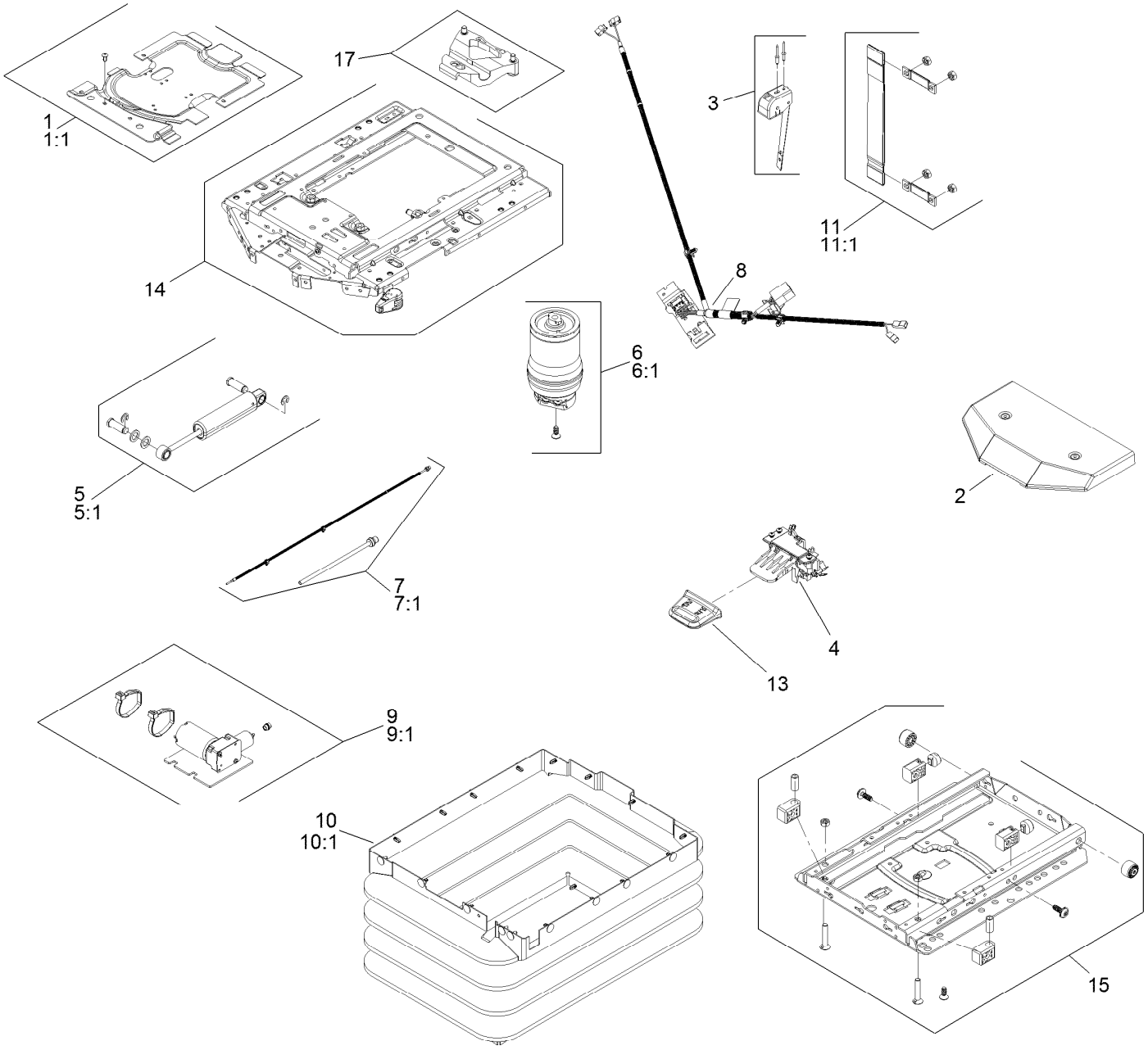

# Seat Suspension Assembly No. 130-2702 (continued)

| Ref. | Part Number | Qty. | Description |
|---|---|---|---|
| 1 | 130-2709 | 1 | Cover ASM |
| 1:1 | 130-2710 | 1 | Cover Kit |
| 2 | 108-8027 | 1 | Cover |
| 3 | 130-2711 | 1 | Control-Level |
| 4 | 108-8029 | 1 | Valve-Control, Air |
| 5 | 130-2712 | 1 | Shock Absorber ASM |
| 5:1 | 130-2713 | 1 | Shock Absorber Kit |
| 6 | 130-2714 | 1 | Air Spring ASM |
| 6:1 | 130-2715 | 1 | Air Spring Kit |
| 7 | 130-2716 | 1 | Air Tube ASM |
| 7:1 | 130-2717 | 1 | Air Tube Kit |
| 8 | 130-2718 | 1 | Harness-Wire |
| 9 | 130-2719 | 1 | Compressor |
| 9:1 | 130-2720 | 1 | Compressor Kit |
| 10 | 130-2721 | 1 | Bellows ASM |
| 10:1 | 130-2722 | 1 | Bellows Kit |
| 11 | 130-2723 | 1 | Tether |
| 11:1 | 130-2724 | 1 | Tether Kit |
| 12 | 130-2725 | 1 | Wear Parts Kit ● |
| 13 | 130-2726 | 1 | Handle |
| 14 | 130-2727 | 1 | Upper Suspension Kit |
| 15 | 130-2728 | 1 | Lower Suspension Kit |
| 16 | 130-2729 | 1 | Adjuster Mounting Kit ● |
| 17 | 130-2730 | 1 | Limiter-Thrust |

● Not illustrated

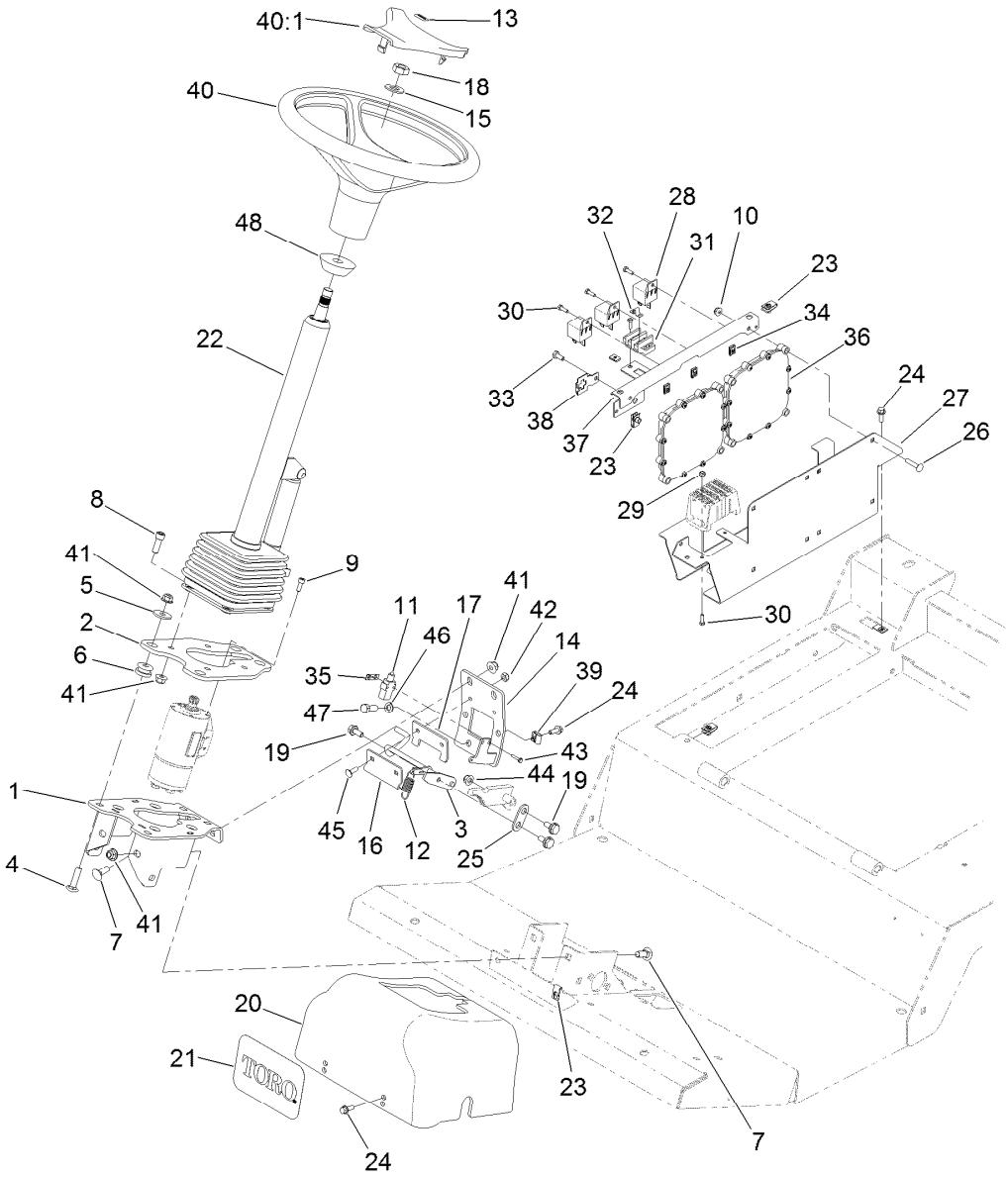


# Steering and Controller Assembly

| Ref. | Part Number | Qty. | Description |
|---|---|---|---|
| 1 | 137-5590-03 | 1 | Mount |
| 2 | 137-5588-03 | 1 | Plate-Mount, Column |
| 3 | 132-6285 | 1 | Rod-Brake |
| 4 | 3231-26 | 4 | Screw-CARR |
| 5 | 63-8410 | 4 | Washer |
| 6 | 63-9750 | 4 | Mount |
| 7 | 3231-2 | 6 | Bolt-CARR |
| 8 | 3274-7 | 4 | Screw-HSH |
| 9 | 105-2409 | 4 | Screw-HSH |
| 10 | 104-7201 | 8 | Nut-HF |
| 11 | 99-3410 | 1 | Switch |
| 12 | 136-7153 | 1 | Spring-Extension |
| 13 | 98-1459 | 1 | Decal |
| 14 | 132-6225-03 | 1 | Support-Rear |
| 15 | 3256-27 | 1 | Washer-Flat |
| 16 | 132-6283 | 1 | Plate-Brake |
| 17 | 132-6284 | 1 | Plate-Brake |
| 18 | 3296-33 | 1 | Nut-Lock, NI |
| 19 | 37-8771 | 2 | Bolt-Shoulder, HF |
| 20 | 132-6244 | 1 | Cover-Steering |
| 21 | 105-1217 | 1 | Decal |

| Ref. | Part Number | Qty. | Description |
|---|---|---|---|
| 22 | 132-6230 | 1 | Steering Tilt Column ASM |
| 23 | 107069 | 7 | Clip |
| 24 | 3234-4 | 6 | Screw-HHF |
| 25 | 137-5548 | 1 | Link-Brake |
| 26 | 3229-3 | 8 | Screw-CARR |
| 27 | 120-4093-03 | 1 | Mount-Power |
| 28 | 99-7435 | 3 | Relay |
| 29 | 3296-12 | 2 | Nut-Lock, NI |
| 30 | 3290-134 | 7 | Screw |
| 31 | 42862 | 1 | Block-Terminal, Ground |
| 32 | 42863 | 1 | Strip-Jumper |
| 33 | 321-3 | 1 | Screw-HH |
| 34 | 107-1013 | 5 | Nut-Speed |
| 35 | 108-9824 | 1 | Nut-Switch |
| 36 | 114-3321 | 2 | Controller-Tec |
| 37 | 120-4127-03 | 1 | Mount-Relay |
| 38 | 114-5502 | 1 | Clip-Fuse |
| 39 | 609900 | 2 | Nut-Speed |
| 40 | 98-1471 | 1 | Wheel-Steering |
| 40:1 | 98-1468 | 1 | Cover-Wheel, Steering |
| 41 | 104-8301 | 14 | Nut-HF, NI |

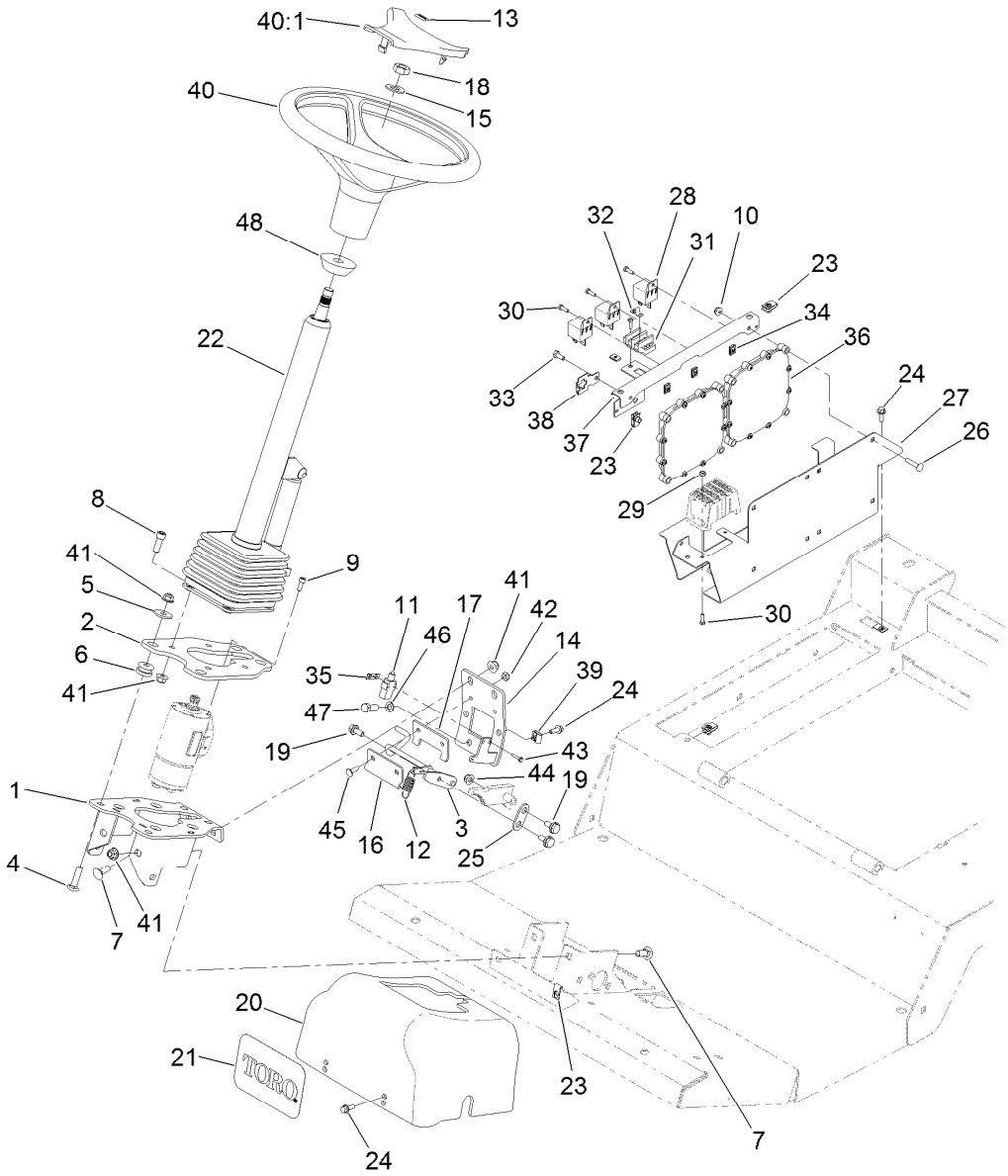


# Steering and Controller Assembly (continued)

| Ref. | Part Number | Qty. | Description |
|---|---|---|---|
| 42 | 3296-16 | 2 | Nut-Lock, NI |
| 43 | 117-5458 | 2 | Screw-HHF |
| 44 | 104-8300 | 2 | Nut-HF, NI |
| 45 | 1-807512 | 2 | Bolt-CARR |
| 46 | 3253-21 | 2 | Washer-Lock |
| 47 | 323-6 | 2 | Screw-HH |
| 48 | 93-5429 | 1 | Collar-Foam |

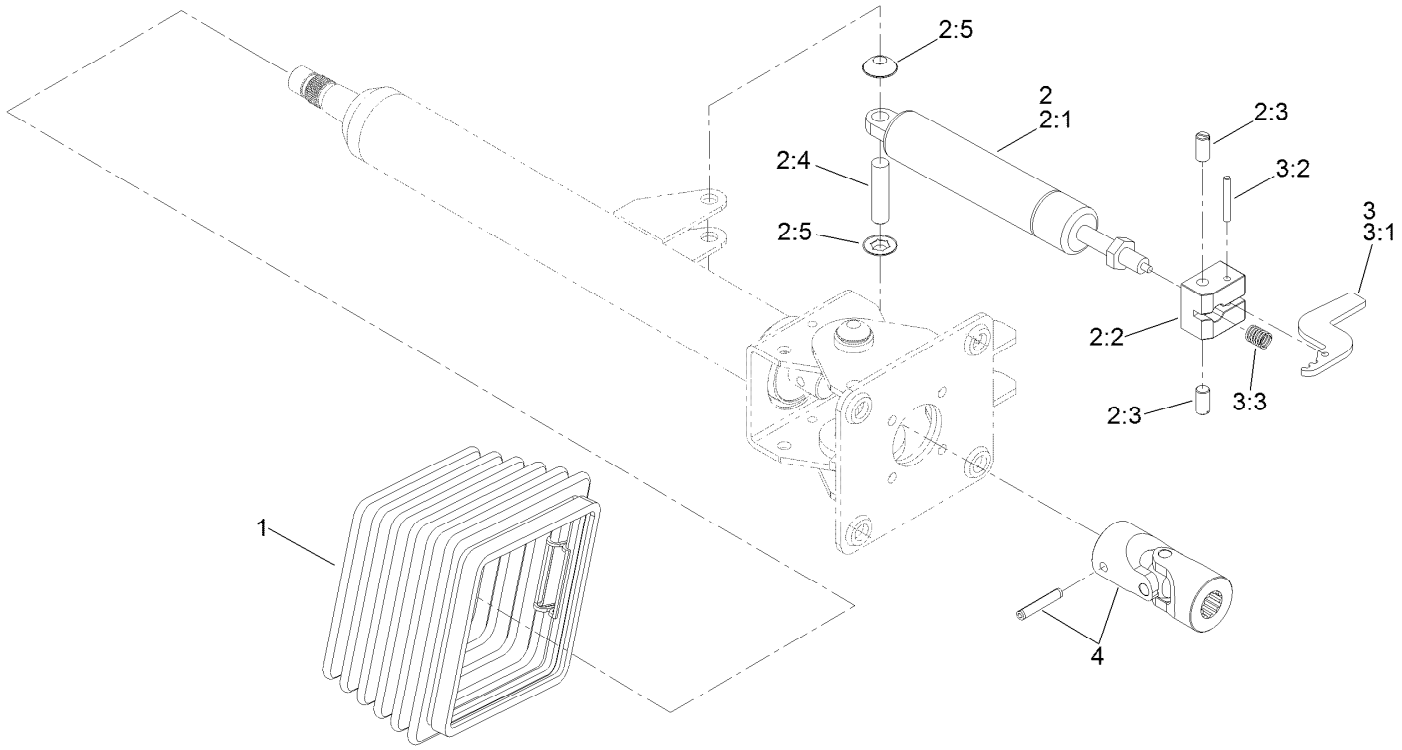


# Steering Column Assembly No. 132-6230

| Ref. | Part Number | Qty. | Description |
|---|---|---|---|
| 1 | 110-6462 | 1 | Bellows-Rubber |
| 2 | 110-6463 | 1 | Cylinder Service Kit |
| 2:1 | | 1 | Cylinder-Gas ● |
| 2:2 | | 1 | Block-Pedal ● |
| 2:3 | | 2 | Bolt ● |
| 2:4 | | 1 | Pin ● |
| 2:5 | | 2 | Washer-Lock ● |
| 3 | 136-4385 | 1 | Pedal Service Kit |
| 3:1 | | 1 | Pedal ● |
| 3:2 | | 1 | Pin ● |
| 3:3 | | 1 | Spring ● |
| 4 | 120-6256 | 1 | Universal Joint Kit |

● Not serviced separately

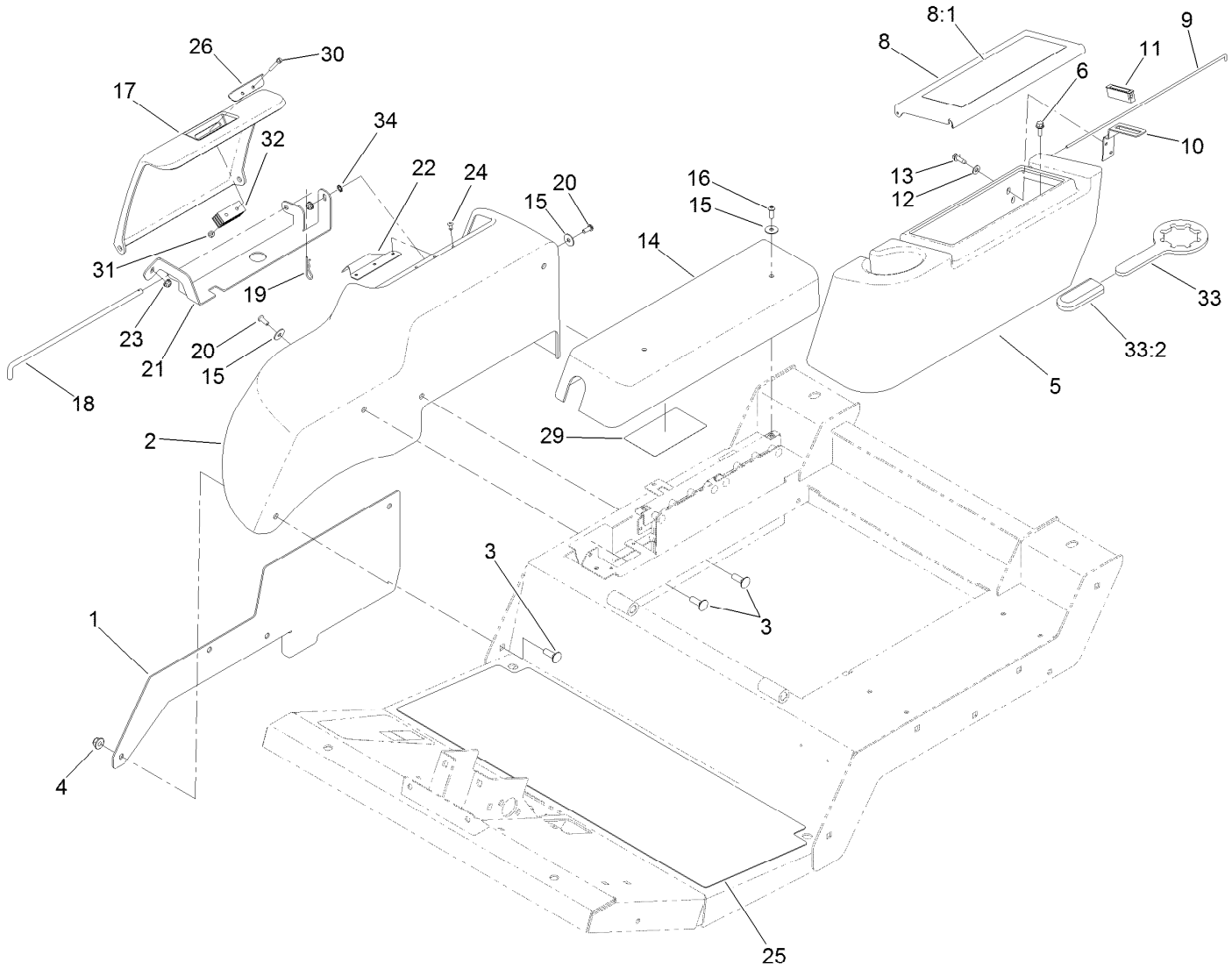


# Fender, Tool Box and Cover Assembly

| Ref. | Part Number | Qty. | Description |
|---|---|---|---|
| 1 | 121-1579-03 | 1 | Plate-Fender, RH |
| 2 | 120-4113 | 1 | Fender-RH |
| 3 | 3231-25 | 4 | Bolt-CARR |
| 4 | 104-8301 | 4 | Nut-HF, NI |
| 5 | 120-4125 | 1 | Housing-Tool Box |
| 6 | 3234-4 | 4 | Screw-HHF |
| 8 | 120-4124 | 1 | Tool Box Cover ASM |
| 8:1 | 117-2754 | 1 | Decal-Warning |
| 9 | 120-4122 | 1 | Rod-Hinge |
| 10 | 104-7545 | 1 | Bracket-Latch |
| 11 | 58-4250 | 1 | Catch-Magnetic |
| 12 | 3256-22 | 2 | Washer-Flat |
| 13 | 32104-95 | 2 | Screw-HWH |
| 14 | 120-4126 | 1 | Cover-Controllers |
| 15 | 87-6630 | 4 | Washer-Plain |
| 16 | 3274-69 | 2 | Screw-HSBH |
| 17 | 120-4115 | 1 | Cover-Battery |

| Ref. | Part Number | Qty. | Description |
|---|---|---|---|
| 18 | 121-1588 | 1 | Rod-Hinge |
| 19 | 3290-467 | 1 | Pin-Hair |
| 20 | 3274-31 | 2 | Screw-HSBH |
| 21 | 121-1586-03 | 1 | Mount-Cover |
| 22 | 127-3706 | 1 | Plate-Cover |
| 23 | 104-7201 | 2 | Nut-HF |
| 24 | 3269-23 | 3 | Rivet-Pop |
| 25 | 132-6226 | 1 | Tread-Foot, Abrasive |
| 26 | 127-3705 | 1 | Plate-Cover |
| 29 | 136-4436 | 1 | Decal-Fuses |
| 30 | 32105-1 | 2 | Screw-SHH |
| 31 | 3296-2 | 2 | Nut-Lock, NI |
| 32 | 69-6260 | 1 | Magnet |
| 33 | 121-3874 | 1 | Wrench ASM |
| 33:2 | 119-1846 | 1 | Grip |
| 34 | 3255-7 | 1 | Washer-Lock/EXT |

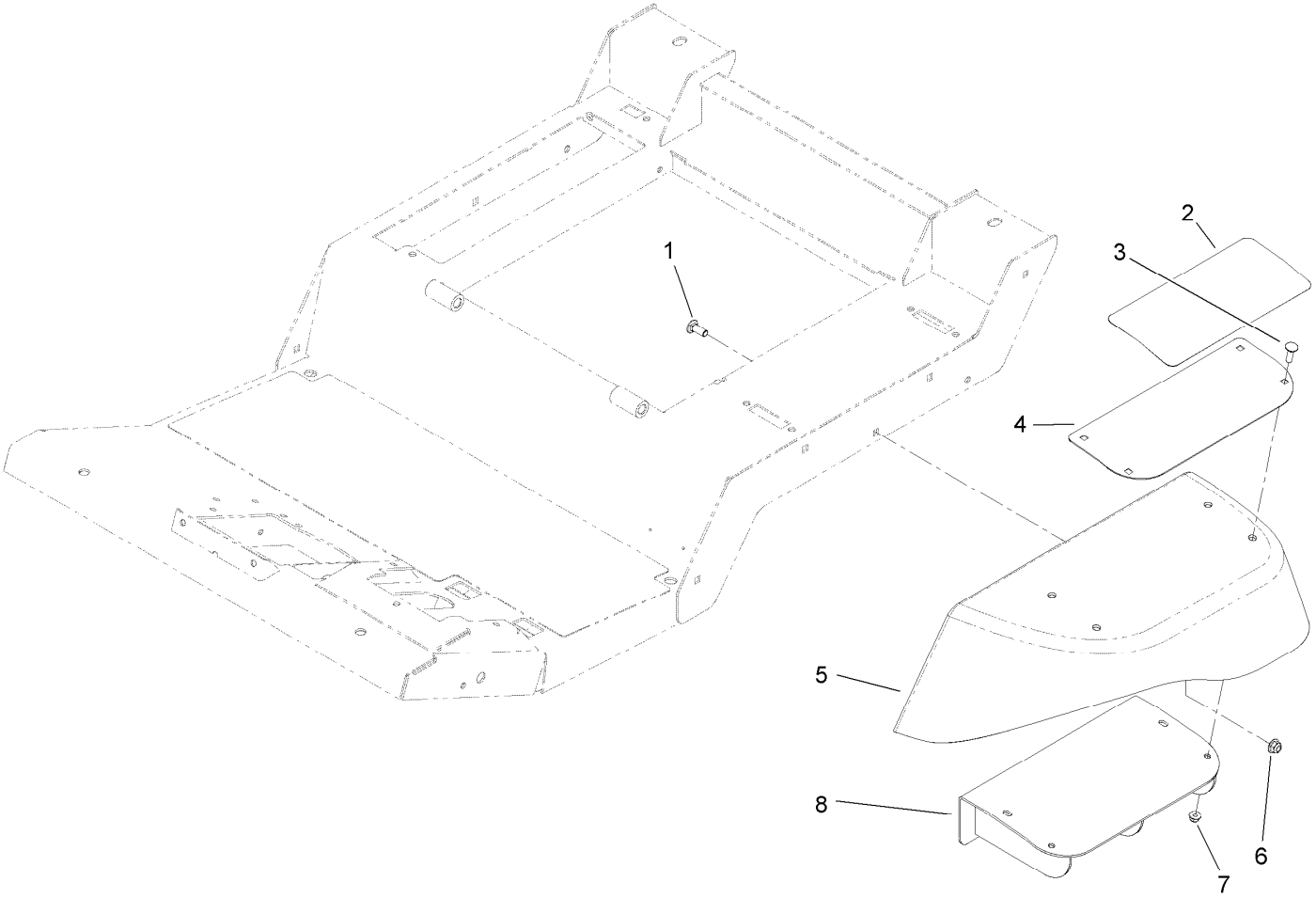


# Fender and Step Support Assembly

| Ref. | Part Number | Qty. | Description |
|---|---|---|---|
| 1 | 3231-25 | 4 | Bolt-CARR |
| 2 | 120-4116 | 1 | Pad-Step, Abrasive |
| 3 | 3230-28 | 4 | Screw-CARR |
| 4 | 120-4117-03 | 1 | Plate-Step |
| 5 | 121-1585 | 1 | Fender-LH |
| 6 | 104-8301 | 4 | Nut-HF, NI |
| 7 | 104-8300 | 4 | Nut-HF, NI |
| 8 | 120-8900-03 | 1 | Support-Step |

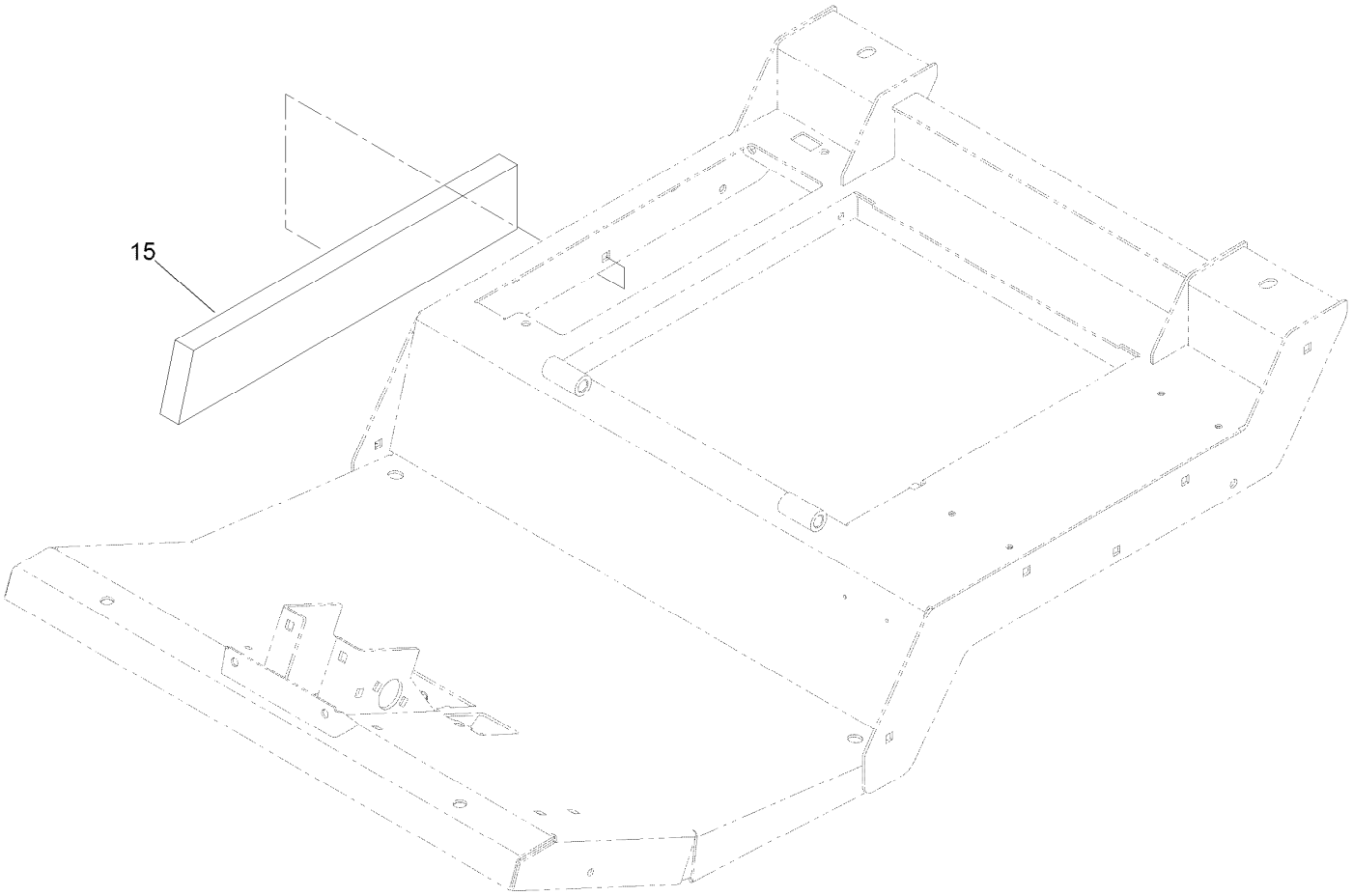


# Acoustic Foam Assembly

| Ref. | Part Number | Qty. | Description |
|---|---|---|---|
| 15 | 127-3708 | 1 | Foam-Right |

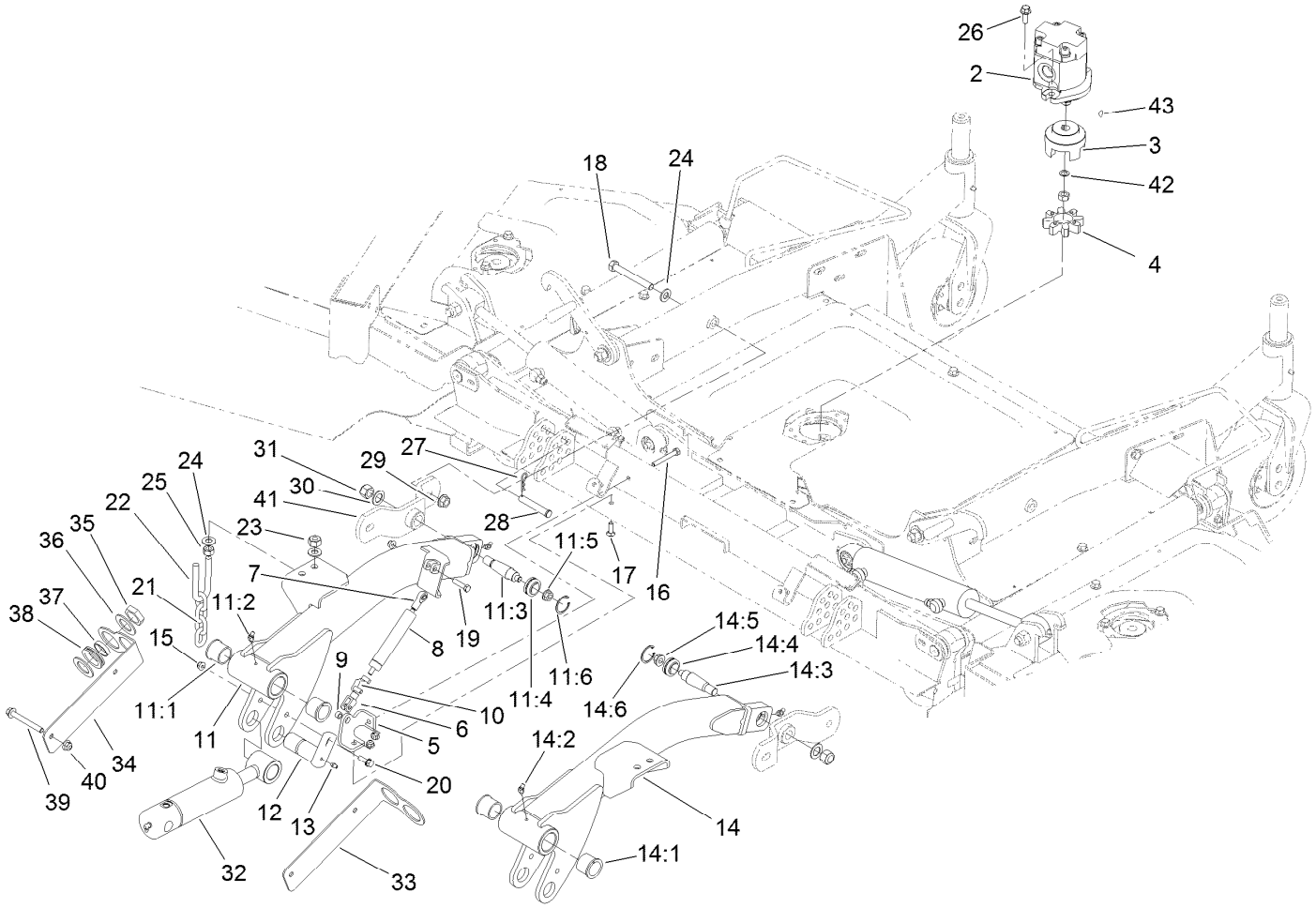


# Front Deck Lift Arm Assembly

| Ref. | Part Number | Qty. | Description |
|---|---|---|---|
| 2 | 127-3694 | 3 | HYD Motor ASM |
| 3 | 104-3541 | 3 | Hub-Spider |
| 4 | 104-3542 | 3 | Spider |
| 5 | 120-9015-01 | 1 | Support-Damper |
| 6 | 115-5455 | 1 | End-Rod, Clevis |
| 7 | 104-8331 | 1 | End-Rod, Spherical |
| 8 | 105-3249 | 1 | Damper |
| 9 | 115-2142 | 1 | Spacer |
| 10 | 115-5454 | 1 | Pin-Spring |
| 11 | 120-9013 | 1 | LH Lift Arm ASM |
| 11:1 | 104-0015 | 2 | Bushing-Flange |
| 11:2 | 302-11 | 2 | Fitting-Lube, 45 DEG |
| 11:3 | 105-7468 | 1 | Stud-Tapered |
| 11:4 | 105-7441 | 1 | Bearing-Spherical |
| 11:5 | 32128-42 | 1 | Nut-HF |
| 11:6 | 32151-34 | 1 | Ring-Retaining |
| 12 | 125-1912 | 2 | Pin-Pivot |
| 13 | 302-5 | 2 | Fitting-Grease |
| 14 | 120-9012 | 1 | RH Lift Arm ASM |
| 14:1 | 104-0015 | 2 | Bushing-Flange |
| 14:2 | 302-11 | 2 | Fitting-Lube, 45 DEG |

| Ref. | Part Number | Qty. | Description |
|---|---|---|---|
| 14:3 | 105-7468 | 1 | Stud-Tapered |
| 14:4 | 105-7441 | 1 | Bearing-Spherical |
| 14:5 | 32128-42 | 1 | Nut-HF |
| 14:6 | 32151-34 | 1 | Ring-Retaining |
| 15 | 104-8300 | 5 | Nut-HF, NI |
| 16 | 322-12 | 1 | Screw-HH |
| 17 | 3230-22 | 1 | Screw-CARR |
| 18 | 325-17 | 4 | Screw-HH |
| 19 | 322-17 | 1 | Screw-HH |
| 20 | 3234-29 | 2 | Screw-HHF |
| 21 | 95-6231 | 2 | Chain-HOC |
| 22 | 104-0108 | 2 | U-Bolt |
| 23 | 3296-25 | 4 | Nut-Lock, NI |
| 24 | 3256-26 | 12 | Washer-Flat |
| 25 | 3217-9 | 4 | Nut-HH |
| 26 | 3234-42 | 6 | Screw-HHF |
| 27 | 3290-467 | 2 | Pin-Hair |
| 28 | 283-55 | 2 | Pin-Clevis |
| 29 | 32128-23 | 4 | Nut-HF |
| 30 | 86-1440 | 2 | Washer-Flat |
| 31 | 3296-41 | 2 | Nut-Lock NI |

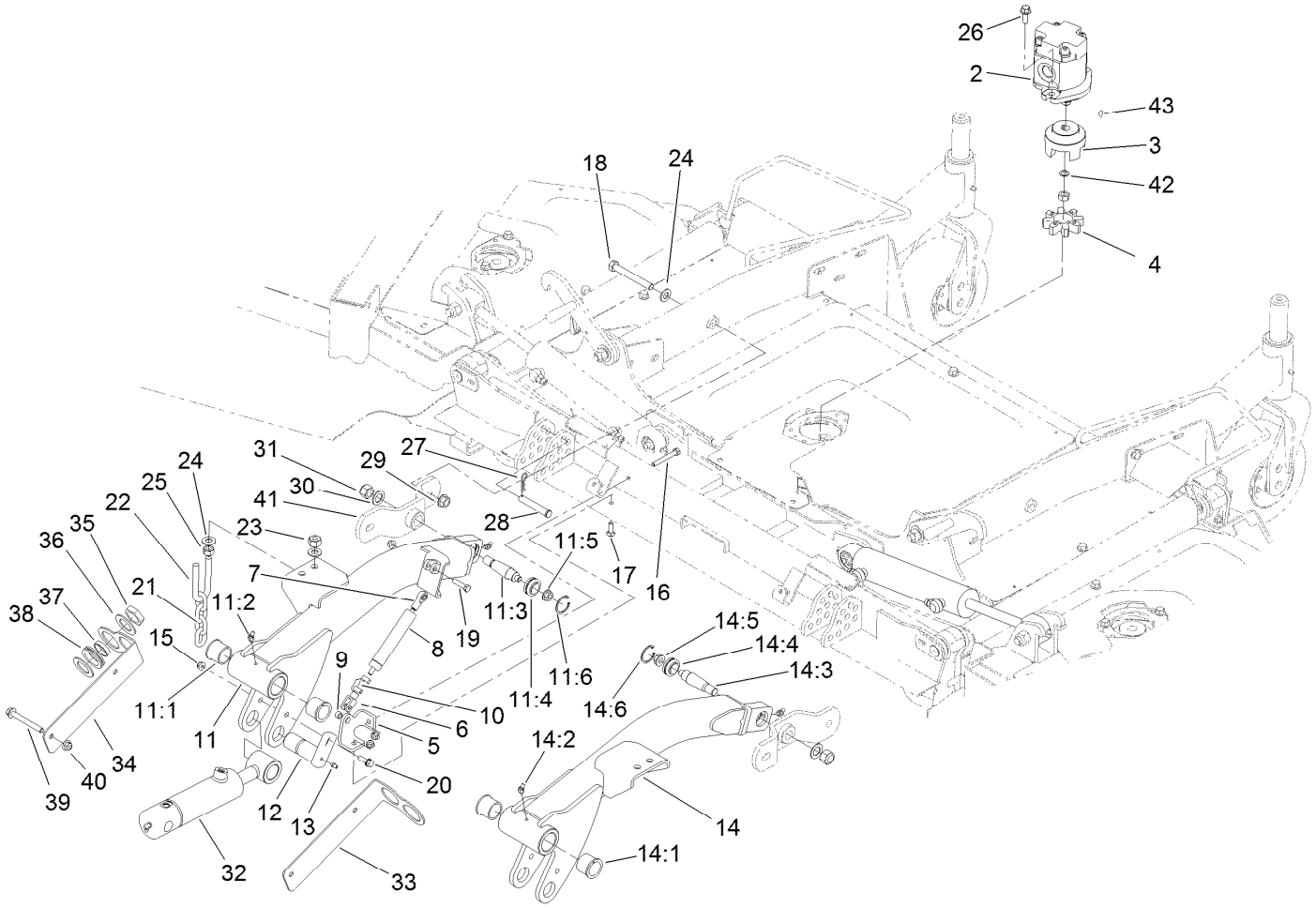


# Front Deck Lift Arm Assembly (continued)

| Ref. | Part Number | Qty. | Description |
|---|---|---|---|
| 32 | 120-8822 | 2 | HYD Cylinder ASM |
| 33 | 121-1499-03 | 1 | Plate-Mount, Bulkhead, RH |
| 34 | 121-1494-03 | 1 | Plate-Mount, Bulkhead, LH |
| 35 | 340-126 | 4 | Nut-Bulkhead |
| 36 | 69-8910 | 8 | Washer |
| 37 | 69-8900 | 4 | Spacer |

| Ref. | Part Number | Qty. | Description |
|---|---|---|---|
| 38 | 240-7 | 4 | Grommet-Rubber |
| 39 | 3234-41 | 4 | Screw-HHF |
| 40 | 104-8301 | 4 | Nut-HF, NI |
| 41 | 115-5442-01 | 2 | Support-Hub |
| 42 | 112-6957 | 3 | Washer-Hardened |
| 43 | 3257-3 | 3 | Key-Woodruff |

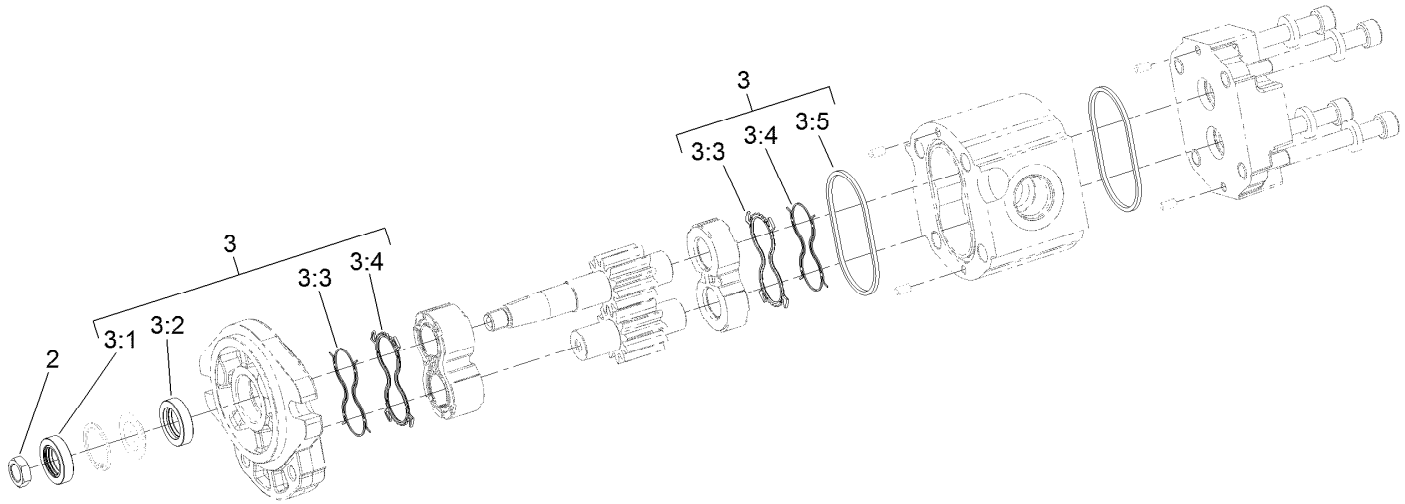


# Hydraulic Motor Assembly No. 127-3694

| *Ref.* | *Part Number* | *Qty.* | *Description* |
|---|---|---|---|
| 2 | 110-8815 | 1 | Nut-Hex |
| 3 | 114-5620 | 1 | Seal Kit |
| 3:1 | | 1 | Seal-Shaft ● |
| 3:2 | | 1 | Seal-Shaft ● |
| 3:3 | | 2 | Seal-Anti Extrusion ● |
| 3:4 | | 2 | Seal-Plate, Balancing ● |
| 3:5 | | 2 | O Ring-Housing ● |

● Not serviced separately

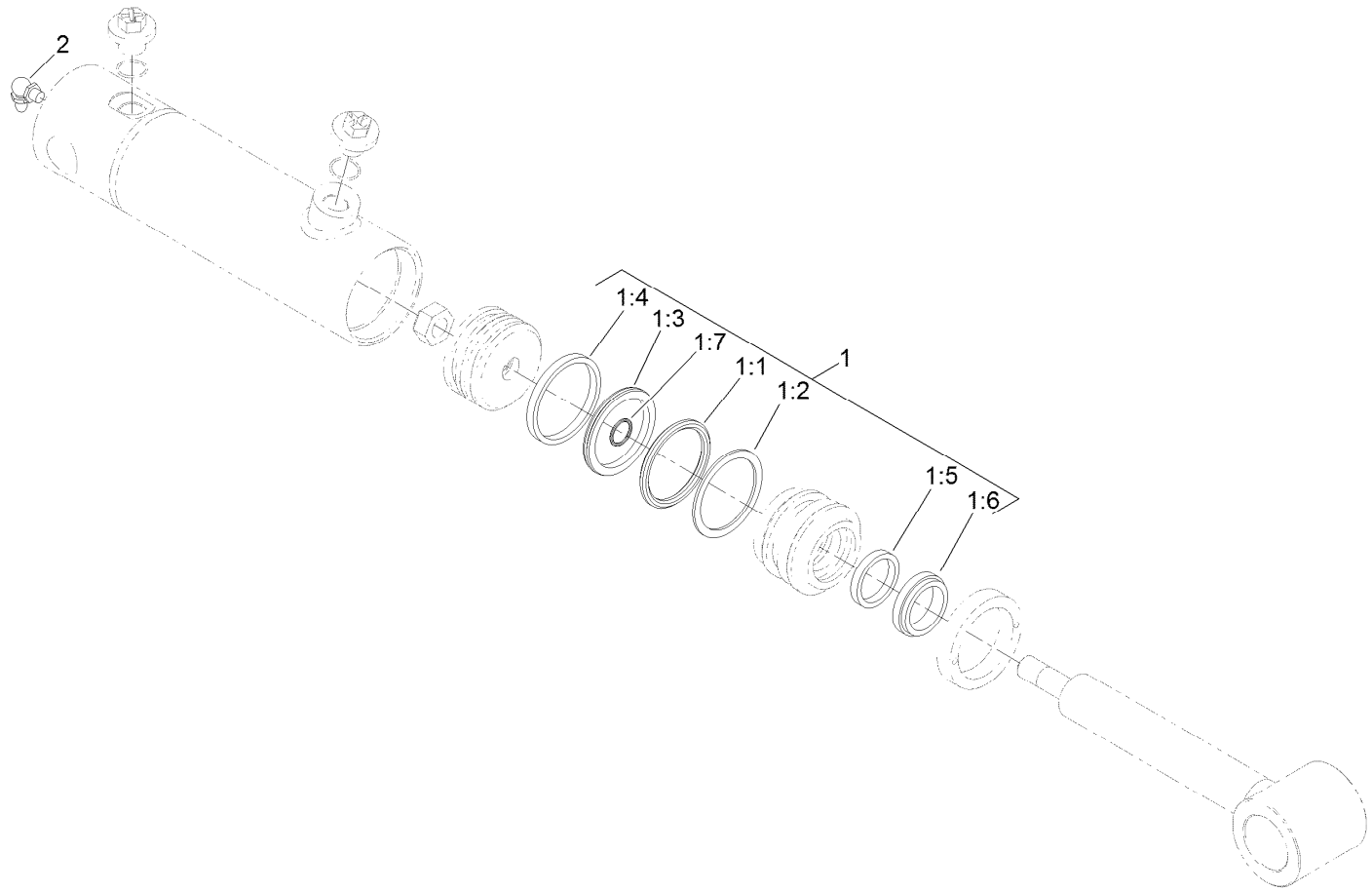


# Hydraulic Cylinder Assembly No. 120-8822

| *Ref.* | *Part Number* | *Qty.* | *Description* |
|---|---|---|---|
| 1 | 125-4300 | 1 | Seal Kit |
| 1:1 | | 1 | O-Ring ● |
| 1:2 | | 1 | Backup ● |
| 1:3 | | 1 | Bp Seal ● |
| 1:4 | | 1 | Wear Ring ● |
| 1:5 | | 1 | Bt Seal ● |
| 1:6 | | 1 | Dust Seal ● |
| 1:7 | | 1 | O-Ring ● |
| 2 | 302-60 | 1 | Fitting-Grease |

● Not serviced separately

# Front Deck Hydraulic Fitting Assembly

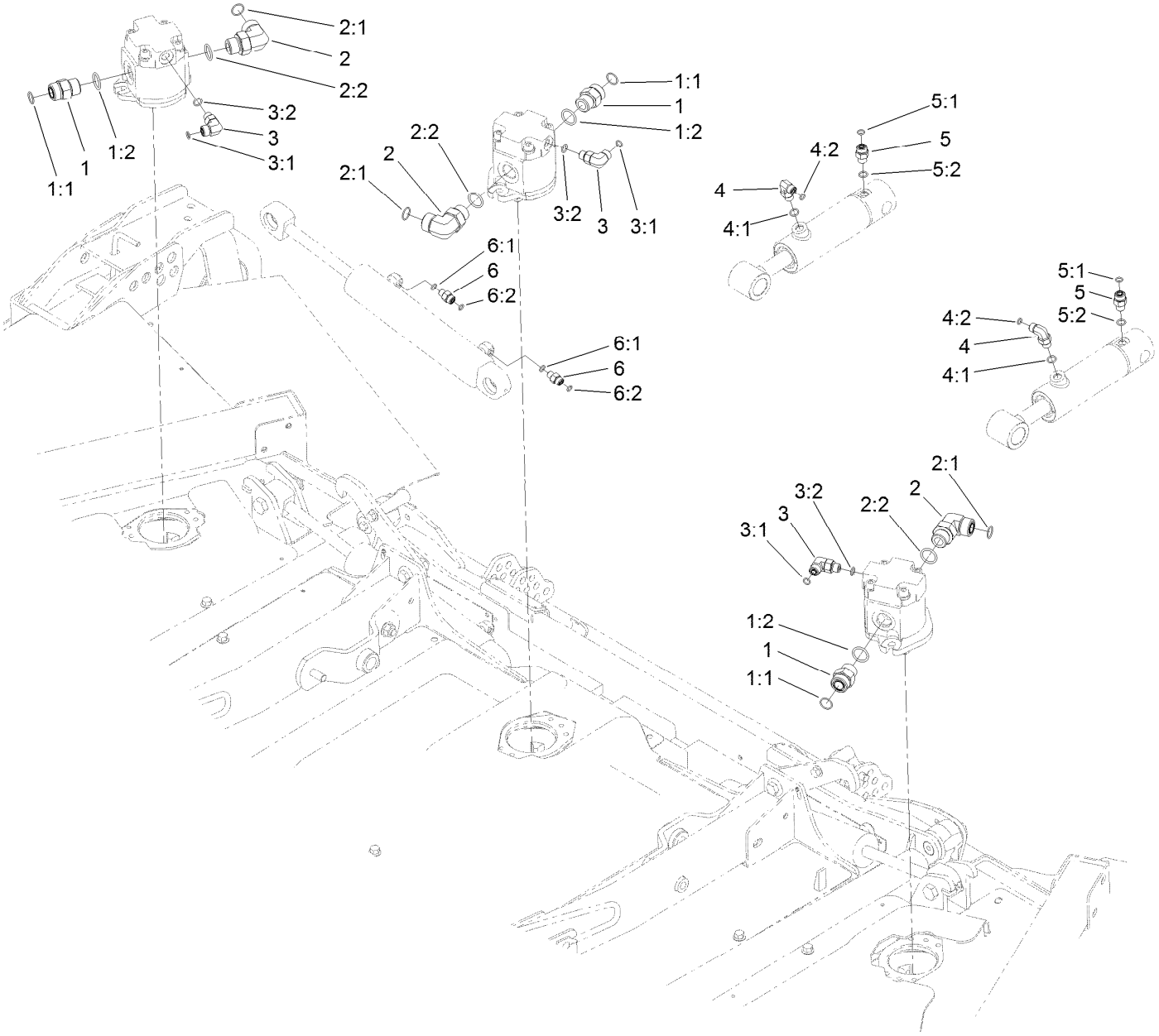

# Front Deck Hydraulic Fitting Assembly (continued)

| Ref. | Part Number | Qty. | Description |
|---|---|---|---|
| 1 | 340-9 | 3 | Fitting-STR |
| 1:1 | 237-58 | 1 | O-Ring |
| 1:2 | 237-81 | 1 | O-Ring |
| 2 | 340-142 | 3 | Fitting-Elbow, 90 DEG |
| 2:1 | 237-58 | 1 | O-Ring |
| 2:2 | 237-81 | 1 | O-Ring |
| 3 | 340-77 | 3 | Fitting-Elbow, 90 DEG |
| 3:1 | 237-22 | 1 | O-Ring |
| 3:2 | 237-42 | 1 | O-Ring |

| Ref. | Part Number | Qty. | Description |
|---|---|---|---|
| 4 | 340-82 | 2 | Fitting-Elbow, 90 DEG |
| 4:1 | 237-42 | 1 | O-Ring |
| 4:2 | 237-21 | 1 | O-Ring |
| 5 | 340-2 | 2 | Fitting-Straight |
| 5:1 | 237-22 | 1 | O-Ring |
| 5:2 | 237-42 | 1 | O-Ring |
| 6 | 340-92 | 4 | Fitting-Straight |
| 6:1 | 237-78 | 1 | O-Ring |
| 6:2 | 237-21 | 1 | O-Ring |

# Front Deck Hose Routing Assembly

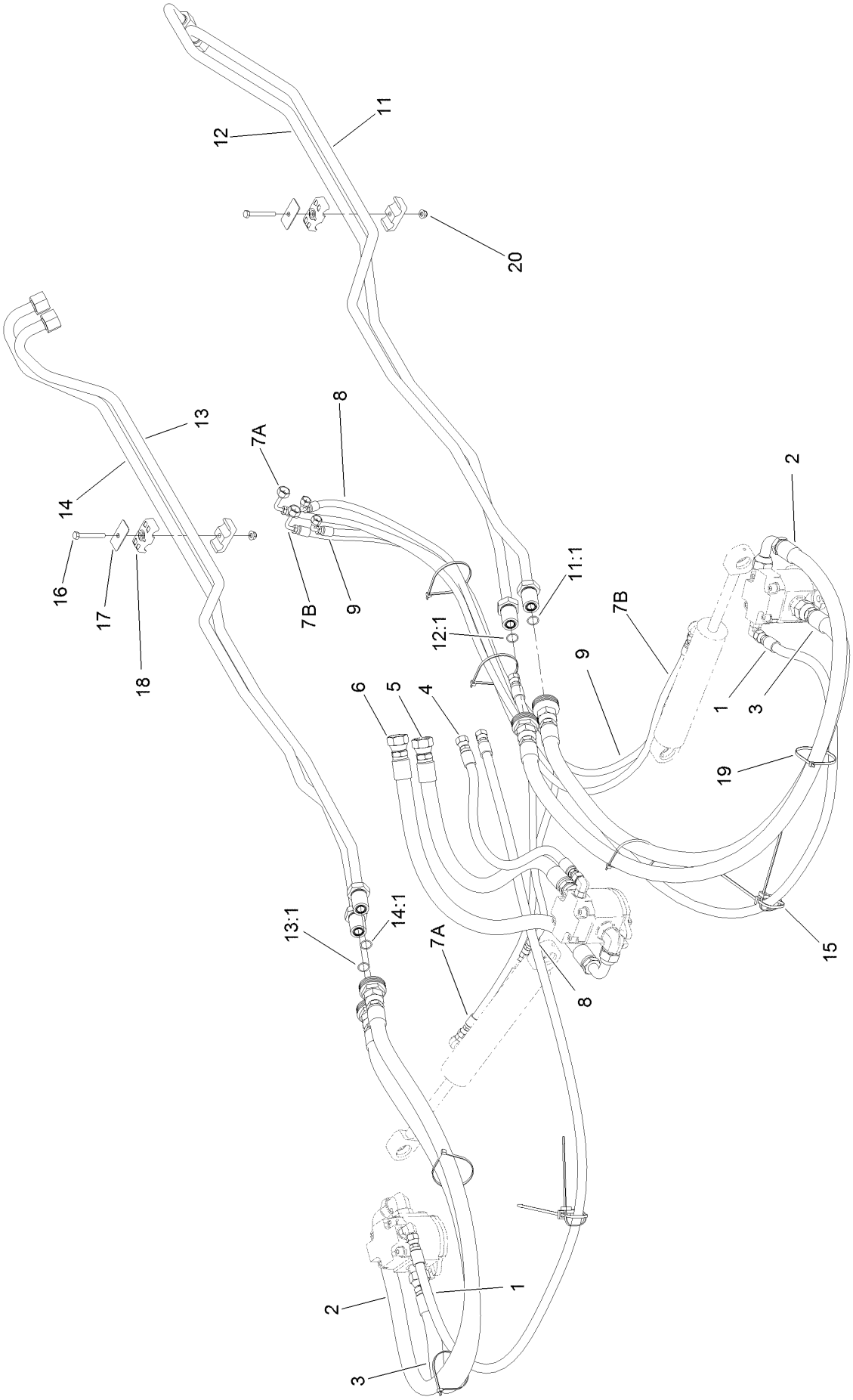

# Front Deck Hose Routing Assembly (continued)

| Ref. | Part Number | Qty. | Description |
|---|---|---|---|
| 1 | 95-8843 | 2 | Hose-HYD |
| 2 | 120-8987 | 2 | Hose-HYD |
| 3 | 121-1457 | 2 | Hose-HYD |
| 4 | 76-6550 | 1 | Hose-HYD |
| 5 | 121-1540 | 1 | Hose-HYD |
| 6 | 121-1541 | 1 | Hose-HYD |
| 7 | 120-9054 | 2 | Hose-HYD |
| 8 | 106-3691 | 1 | Hose-HYD |
| 9 | 85-4940 | 1 | Hose-HYD |
| 11 | 130-2705 | 1 | Tube ASM |
| 11:1 | 237-58 | 1 | O-Ring |
| 12 | 130-2706 | 1 | Tube ASM |
| 12:1 | 237-58 | 1 | O-Ring |
| 13 | 130-2707 | 1 | Tube ASM |
| 13:1 | 237-58 | 1 | O-Ring |
| 14 | 130-2708 | 1 | Tube ASM |
| 14:1 | 237-58 | 1 | O-Ring |
| 15 | 3290-378 | 4 | Tie-Cable |
| 16 | 322-12 | 2 | Screw-HH |
| 17 | 69-9761 | 2 | Plate-Cover |
| 18 | 94-8105 | 4 | Clamp-Tube |
| 19 | 3290-379 | 6 | Tie-Cable |
| 20 | 104-8300 | 2 | Nut-HF, NI |

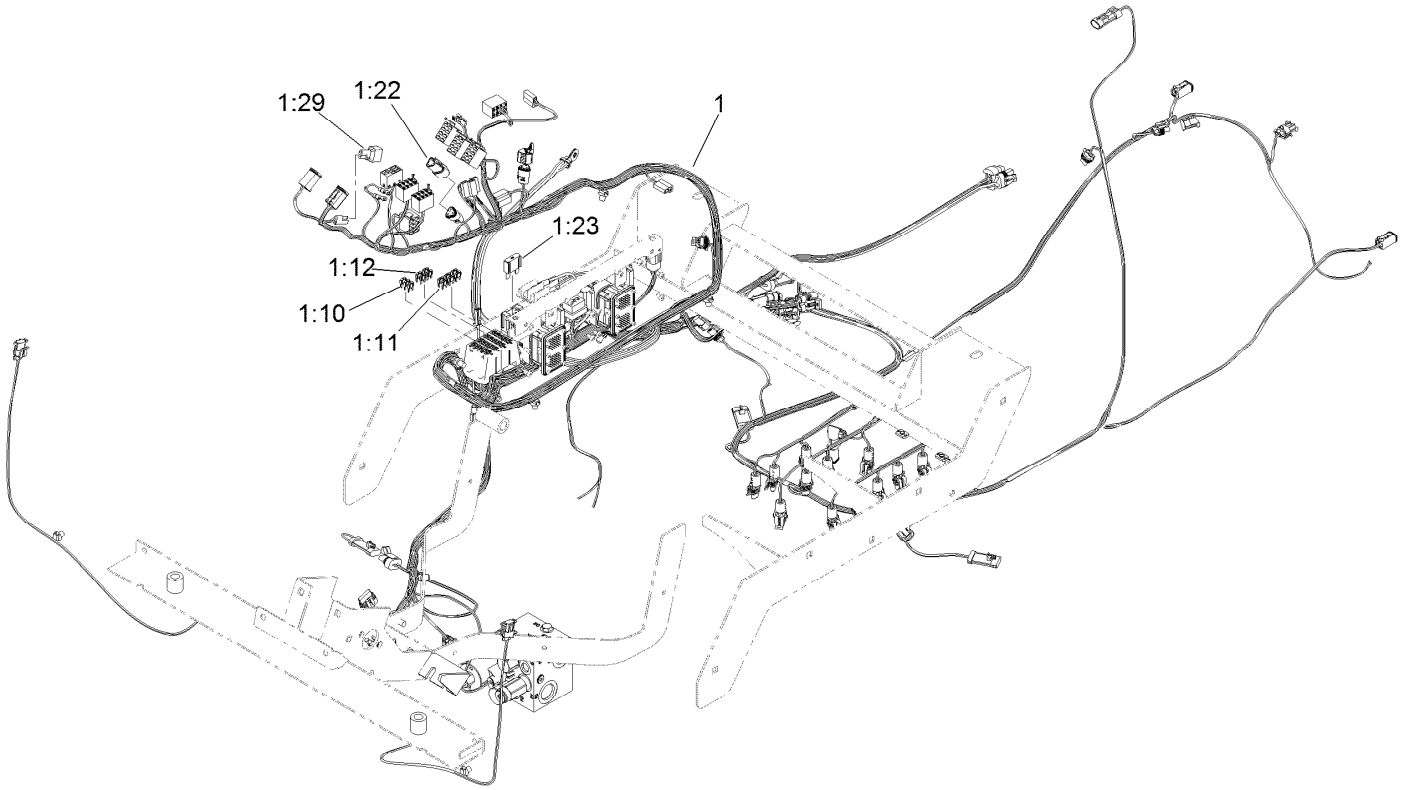


# Platform Wire Harness and Fuse Assembly

| *Ref.* | *Part Number* | *Qty.* | *Description* |
|---|---|---|---|
| 1 | 122-1530 | 1 | Harness-Wire, Platform |
| 1:10 | 121-8861 | 3 | Fuse-Mini Blade, 2 Amp |
| 1:11 | 121-8865 | 6 | Fuse-Mini Blade, 7.5 Amp |
| 1:12 | 121-8866 | 4 | Fuse-Mini Blade, 10 Amp |
| 1:22 | 32180-043 | 1 | Resistor-120 Ohm |
| 1:23 | 114-3342 | 1 | Fuse-Maxi, 60 Amp |
| 1:29 | 104-4022 | 1 | Resistor-75 Ohm |

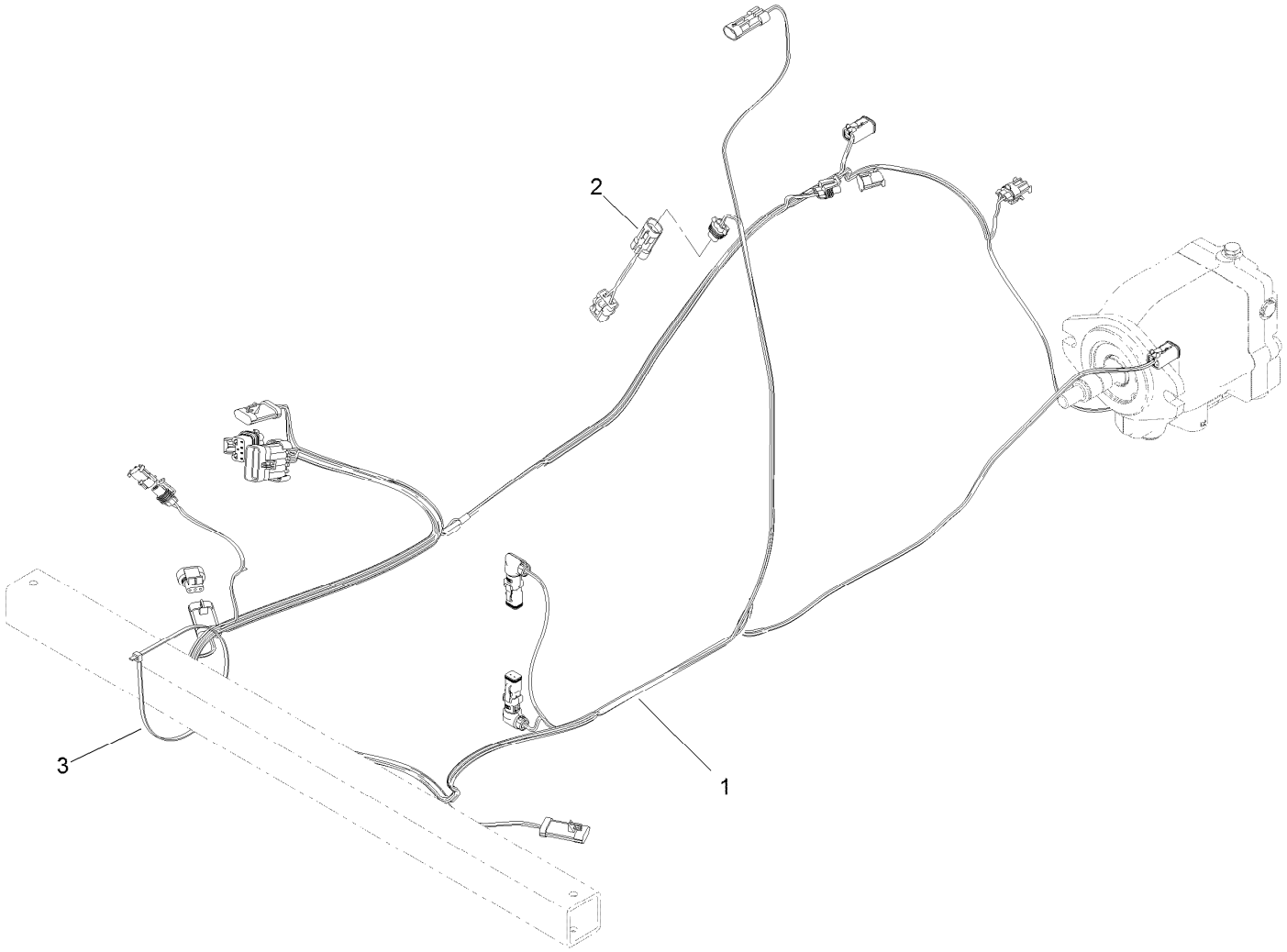


# Rear Wire Harness Assembly

| *Ref.* | *Part Number* | *Qty.* | *Description* |
|---|---|---|---|
| 1 | 122-0974 | 1 | Harness-Wire, Rear |
| 2 | 115-1931 | 1 | Harness-Wire, Fuel Pump Adapter |
| 3 | 3290-379 | 1 | Tie-Cable |

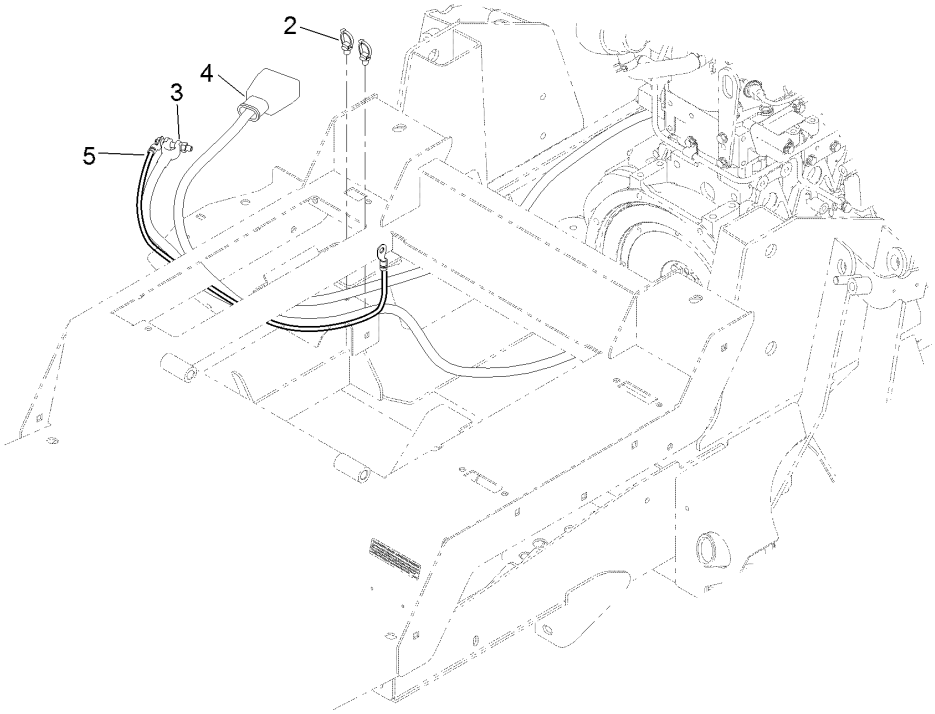


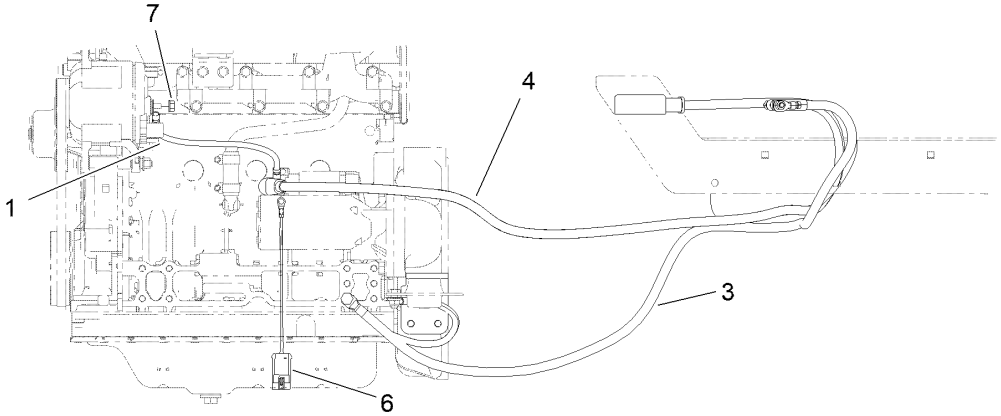


# Battery Cable and Ground Assembly

| *Ref.* | *Part Number* | *Qty.* | *Description* |
|---|---|---|---|
| 1 | 122-0071 | 1 | Cable-Battery, Positive |
| 2 | 32180-030 | 2 | Clip-Tie |
| 3 | 121-8898 | 1 | Cable-Battery, Negative |
| 4 | 121-8897 | 1 | Cable-Battery, Positive |
| 5 | 54-3094 | 1 | Cable |
| 6 | 108-9470 | 1 | Harness-Wire, Fusible Link |
| 7 | 33004-00 | 2 | Nut-HF |

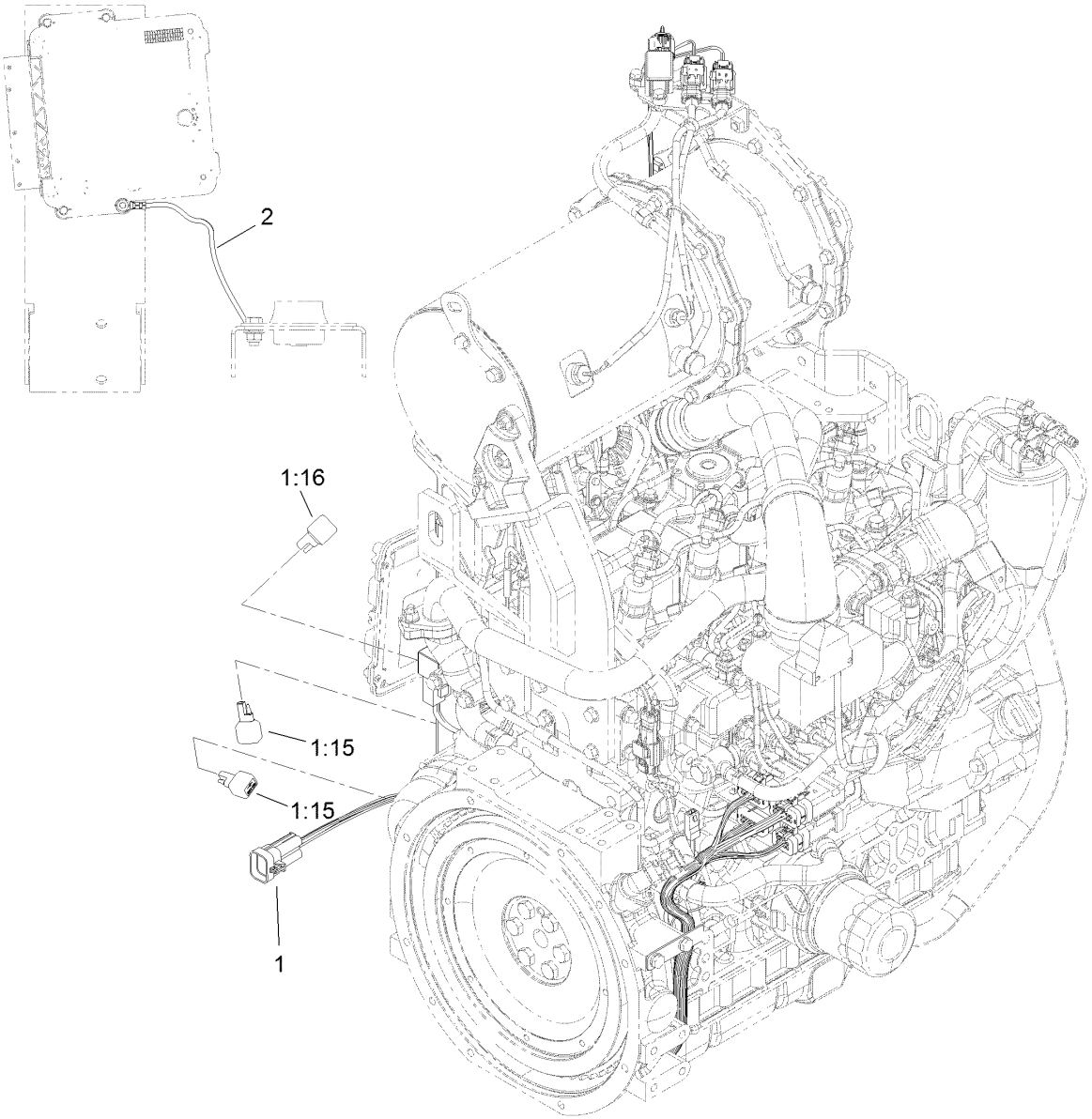


# Engine Harness Assembly

| *Ref.* | *Part Number* | *Qty.* | *Description* |
|---|---|---|---|
| 1 | 122-1569 | 1 | Harness-Wire, Engine |
| 1:15 | 100-4918 | 2 | Diode |
| 1:16 | 121-8891 | 1 | Resistor (1.6K Ohm) |
| 2 | 122-0057 | 1 | Harness-Wire, Ground |

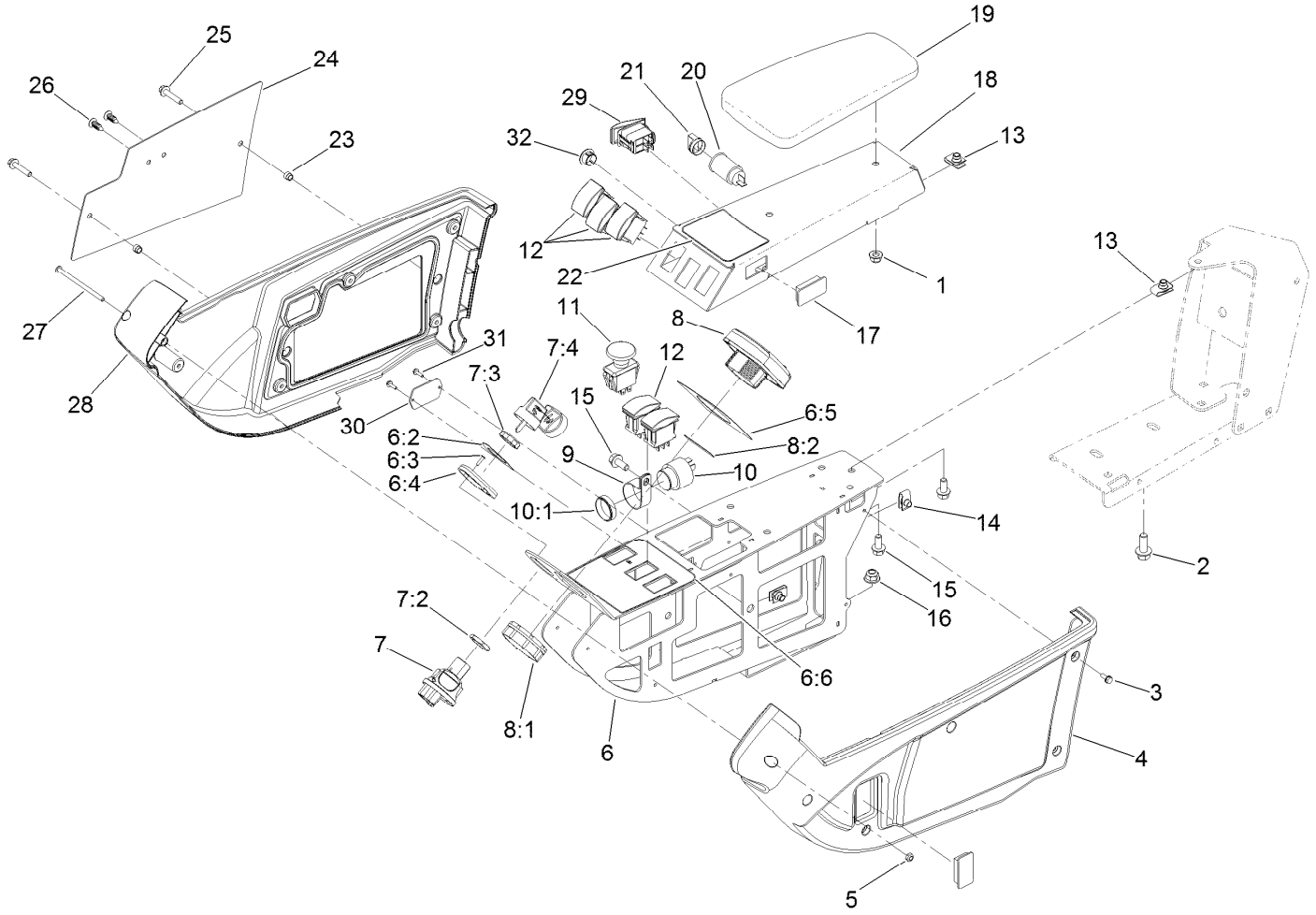


# Armrest Control Panel Assembly

| Ref. | Part Number | Qty. | Description |
|---|---|---|---|
| 1 | 104-8300 | 2 | Nut-HF, NI |
| 2 | 3234-42 | 2 | Screw-HHF |
| 3 | 32144-112 | 10 | Screw-HWH |
| 4 | 108-7604 | 1 | Cover-LH |
| 5 | 3296-12 | 1 | Nut-Lock, NI |
| 6 | 120-4155 | 1 | Panel ASM |
| 6:2 | 121-3884 | 1 | Decal-Console, Upper |
| 6:3 | 3269-17 | 2 | Rivet-Pop |
| 6:4 | 121-3889 | 1 | Step-Elevated, Switch |
| 6:5 | 121-3887 | 1 | Decal-Console, Display |
| 6:6 | 120-4159 | 1 | Decal-Console, Lower |
| 7 | 121-5159 | 1 | Ignition Switch ASM |
| 7:2 | 121-5160 | 1 | Nut-Hex |
| 7:3 | 121-5161 | 1 | Nut-Face |
| 7:4 | 121-5162 | 1 | Set-Key, Ignition |
| 8 | 120-6310 | 1 | LCD Display ASM |
| 8:1 | 120-4630 | 1 | Nut-Display |
| 8:2 | 120-6311 | 1 | Decal-Display |
| 9 | 2412-74 | 1 | R-Clamp |
| 10 | 80-9330 | 1 | Audio Alarm ASM |
| 10:1 | 104-5107 | 1 | Nut-Plastic, Knurled |

| Ref. | Part Number | Qty. | Description |
|---|---|---|---|
| 11 | 93-9999 | 1 | Switch-PTO |
| 12 | 100-1535 | 5 | Switch-Rocker, (On)-Off-(On) |
| 13 | 94-2413 | 6 | Nut-U |
| 14 | 107069 | 2 | Clip |
| 15 | 3234-5 | 6 | Screw-HHF |
| 16 | 104-8301 | 2 | Nut-HF, NI |
| 17 | 99-7420 | 2 | Plug-Hole |
| 18 | 136-4389-03 | 1 | Panel-Control |
| 19 | 108-7602 | 1 | Rest-Arm |
| 20 | 99-7411 | 1 | Point-Power |
| 21 | 99-7416 | 1 | Cap |
| 22 | 127-3700 | 1 | Decal-Lift |
| 23 | 110-0542 | 2 | Spacer-Flange |
| 24 | 115-8849-03 | 1 | Plate-Cover |
| 25 | 3234-21 | 2 | Screw-HHF |
| 26 | 114-4899 | 2 | Rivet-Push |
| 27 | 3250-22 | 1 | Screw-PPH |
| 28 | 108-7605 | 1 | Cover-RH |
| 29 | 114-3329 | 1 | Switch-Rocker |
| 30 | 121-1630 | 1 | Plate-Cover |

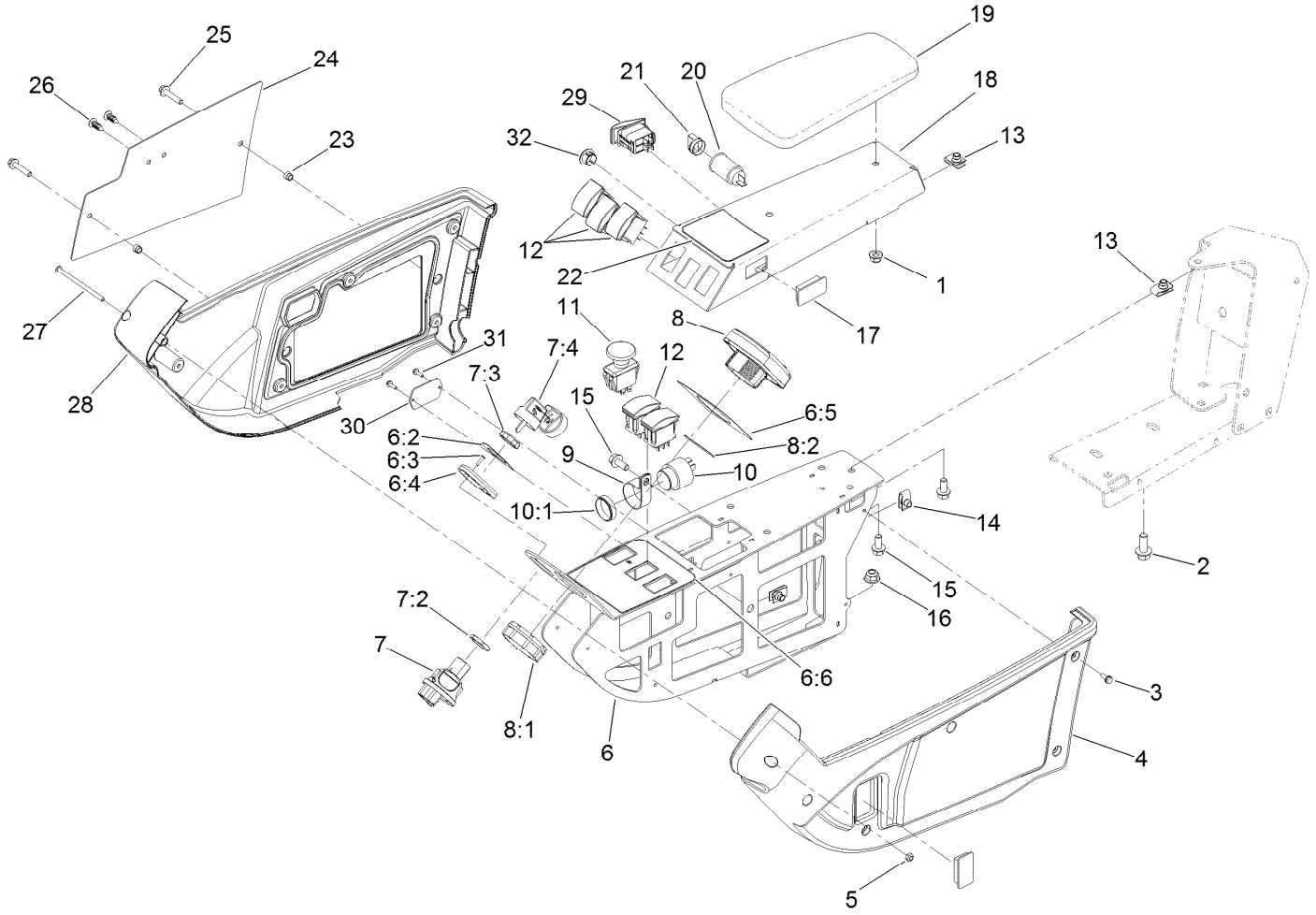


# Armrest Control Panel Assembly (continued)

| *Ref.* | *Part Number* | *Qty.* | *Description* |
|---|---|---|---|
| 31 | 32144-18 | 2 | Screw-HWH |
| 32 | 94-5627 | 1 | Plug |

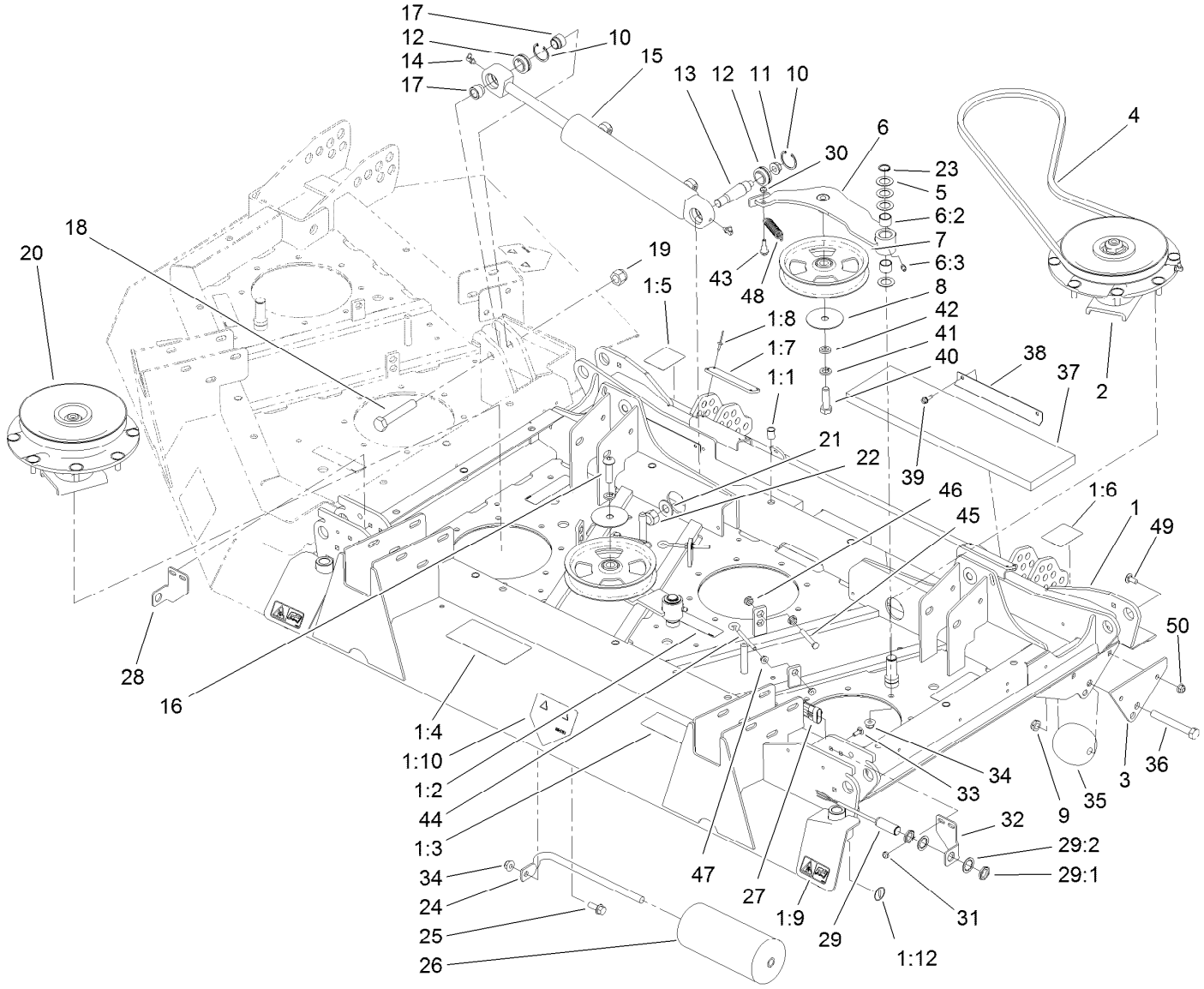


# Center Deck Assembly

| Ref. | Part Number | Qty. | Description |
|---|---|---|---|
| 1 | 110-3297 | 1 | Center Deck ASM |
| 1:1 | 32148-9 | 9 | Nut-Clinch |
| 1:2 | 100-6578 | 3 | Decal-Danger |
| 1:3 | 93-7818 | 1 | Decal-Torque, Blade Bolt |
| 1:4 | 100-5622 | 1 | Decal-HOC |
| 1:5 | 106-4250 | 1 | Decal-HOC, RH |
| 1:6 | 106-4251 | 1 | Decal-HOC, LH |
| 1:7 | 105-0786 | 2 | Pad-Plastic |
| 1:8 | 3269-8 | 8 | Rivet-Blind |
| 1:9 | 93-6674 | 2 | Decal-Warning |
| 1:10 | 120-6604 | 1 | Decal-Danger |
| 1:12 | 58-6520 | 2 | Decal-Grease |
| 2 | 119-4776 | 3 | Low-Driven Spindle ASM |
| 3 | 132-6117-01 | 2 | Plate-Stop |
| 4 | 108-8077 | 4 | V-Belt, Deck |
| 5 | 3-6498 | 16 | Washer-Thrust |
| 6 | 110-6128 | 4 | Idler Arm ASM |
| 6:2 | 256-76 | 2 | Bushing |
| 6:3 | 302-5 | 1 | Fitting-Grease |
| 7 | 132-9421 | 4 | Pulley-Idler, Flat |
| 8 | 100-3102 | 4 | Washer-Flat |

| Ref. | Part Number | Qty. | Description |
|---|---|---|---|
| 9 | 3296-45 | 2 | Nut-Hex |
| 10 | 32151-34 | 4 | Ring-Retaining |
| 11 | 32128-42 | 2 | Nut-HF |
| 12 | 105-7441 | 4 | Bearing-Spherical |
| 13 | 105-7468 | 2 | Stud-Tapered |
| 14 | 302-60 | 4 | Fitting-Grease |
| 15 | 139-0957 | 2 | Hydraulic Cylinder ASM |
| 16 | 108-1993 | 1 | Screw-HSBH |
| 17 | 105-7443 | 4 | Spacer-Pilot |
| 18 | 327-14 | 2 | Screw-HH |
| 19 | 3296-53 | 2 | Nut-Lock, NI |
| 20 | 119-4549 | 1 | High-Driven Spindle ASM |
| 21 | 3256-27 | 2 | Washer-Flat |
| 22 | 3296-41 | 2 | Nut-Lock NI |
| 23 | 32120-72 | 4 | Ring-Snap |
| 24 | 68-6840 | 1 | Shaft-Roller |
| 25 | 3234-11 | 1 | Screw-HHF |
| 26 | 68-6710 | 1 | Roller |
| 27 | 117-5717 | 1 | Harness-Wire, Deck |
| 28 | 119-0081 | 1 | Mount-Switch, RH |
| 29 | 115-5300 | 2 | Proximity Switch ASM |

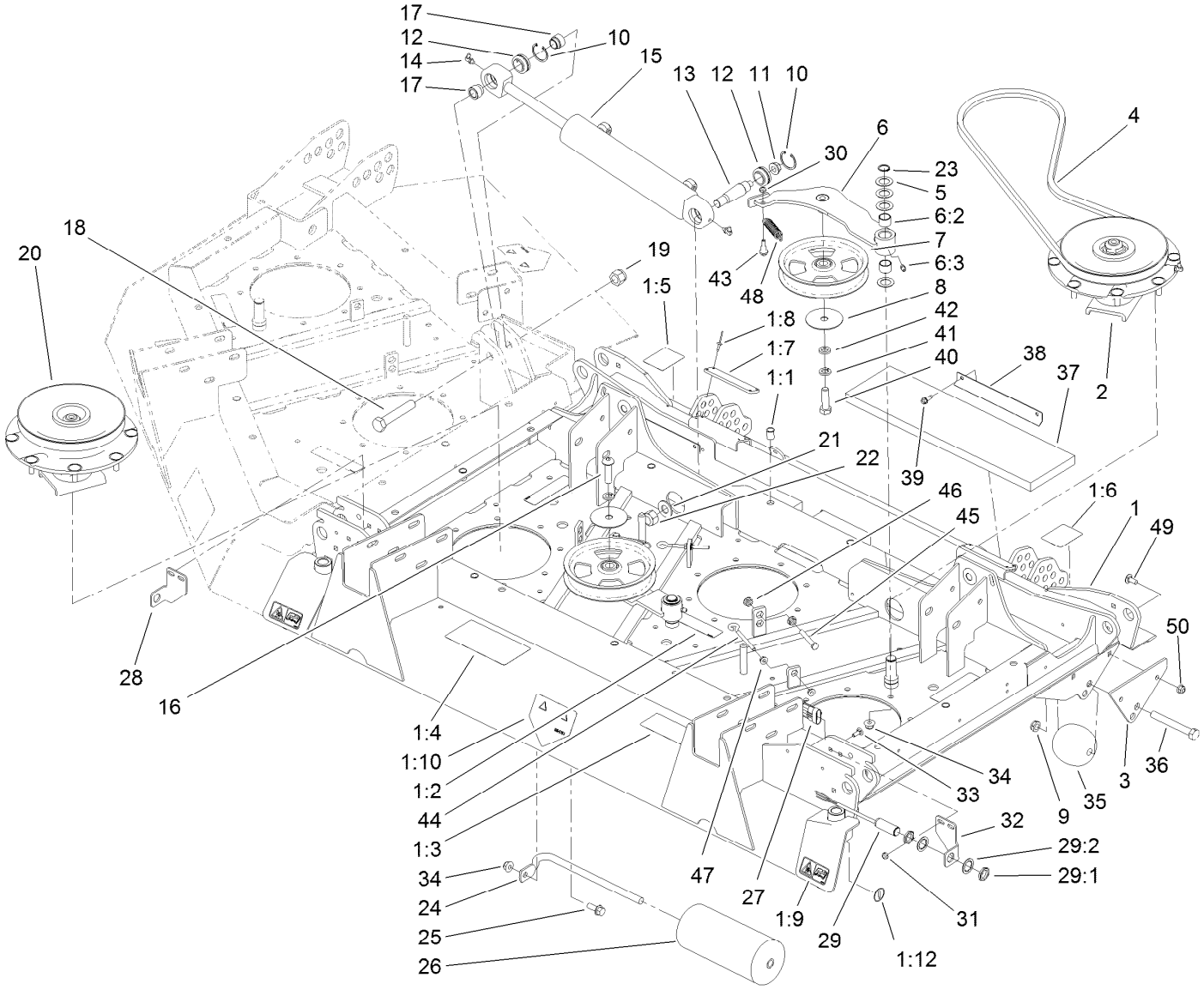


# Center Deck Assembly (continued)

| Ref. | Part Number | Qty. | Description |
|---|---|---|---|
| 29:1 | 117-3207 | 2 | Nut-Hex |
| 29:2 | 117-3208 | 2 | Washer-Lock, Internal Tooth |
| 30 | 3296-56 | 4 | Nut-Lock, NI |
| 31 | 104-7201 | 4 | Nut-HF |
| 32 | 119-0080 | 1 | Mount-Switch, LH |
| 33 | 3229-1 | 4 | Screw-CARR |
| 34 | 104-8301 | 45 | Nut-HF, NI |
| 35 | 29-4820 | 2 | Roller |
| 36 | 325-17 | 2 | Screw-HH |
| 37 | 106-7179 | 2 | Pad-Foam |
| 38 | 106-7227 | 4 | Support-Pad |
| 39 | 32104-95 | 8 | Screw-HWH |

| Ref. | Part Number | Qty. | Description |
|---|---|---|---|
| 40 | 325-7 | 3 | Screw-HH |
| 41 | 3253-7 | 4 | Washer-Lock |
| 42 | 9202424 | 3 | Spacer |
| 43 | 104-0858 | 4 | Bolt-Shoulder |
| 44 | 68-0090 | 4 | Screw-Adjusting |
| 45 | 9114524 | 4 | Bolt-TAP, HH |
| 46 | 32128-26 | 8 | Nut-Flange |
| 47 | 32128-14 | 8 | Nut-HF |
| 48 | 107938 | 4 | Spring-Extension |
| 49 | 3230-23 | 4 | Screw-CARR |
| 50 | 104-8300 | 4 | Nut-HF, NI |

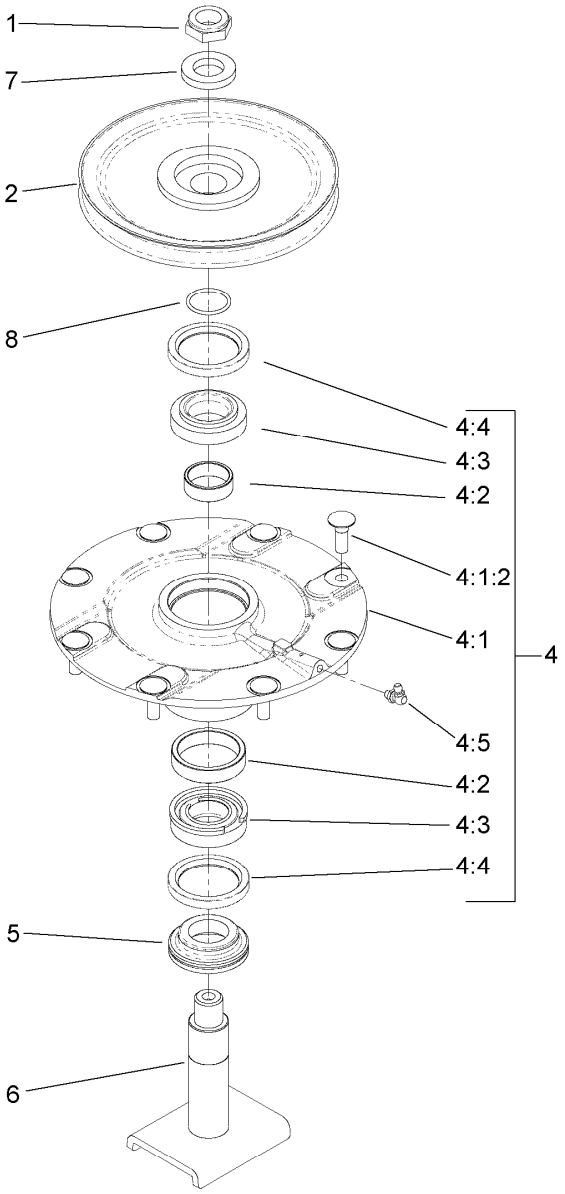


# Low Driven Spindle Assembly No. 119-4776

| *Ref.* | *Part Number* | *Qty.* | *Description* |
|---|---|---|---|
| 1 | 3296-60 | 1 | Nut-Lock, NI |
| 2 | 104-3546 | 1 | Pulley-Driven, Low |
| 4 | 119-4775 | 1 | Spindle Housing ASM |
| 4:1 | | 1 | Spindle ASM ● |
| 4:1:2 | 114-8195 | 8 | Bolt-Neck, Ribbed |
| 4:2 | 120-5577 | 1 | Bearing Spacer Set |
| 4:3 | 110-8297 | 1 | Bearing ASM |
| 4:4 | 253-154 | 2 | Seal-Oil |
| 4:5 | 302-60 | 1 | Fitting-Grease |
| 5 | 69-6950 | 1 | Spacer-Shaft, Spindle |
| 6 | 104-3554 | 1 | Shaft-Spindle |
| 7 | 120-5576 | 1 | Washer-Hardened |
| 8 | 106-7159 | 1 | O-Ring |

● Not serviced separately

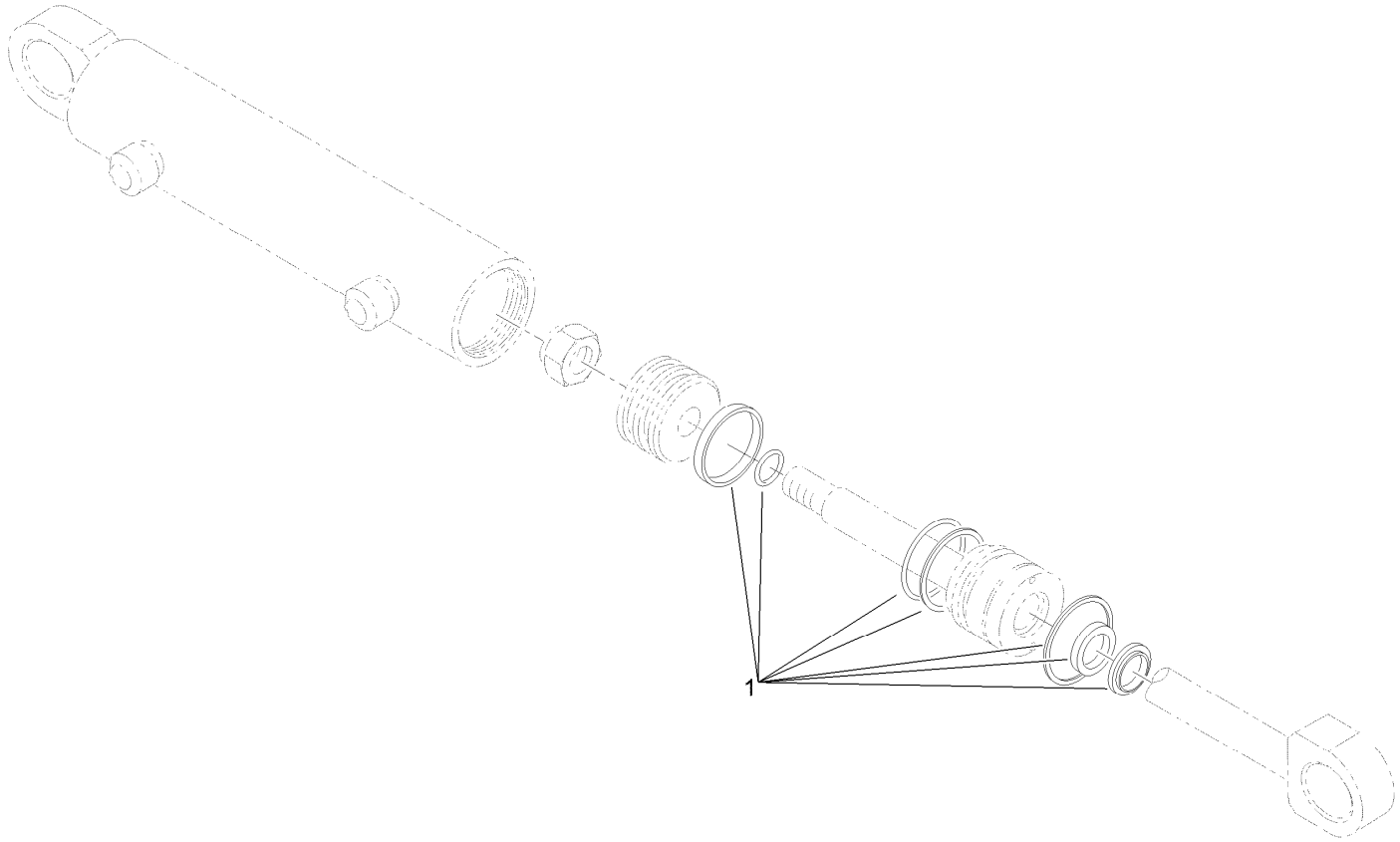


# Hydraulic Cylinder Assembly No. 139-0957

| *Ref.* | *Part Number* | *Qty.* | *Description* |
|---|---|---|---|
| 1 | 131-7757 | 1 | Cylinder Seal Kit |

# High Driven Spindle Assembly No. 119-4549

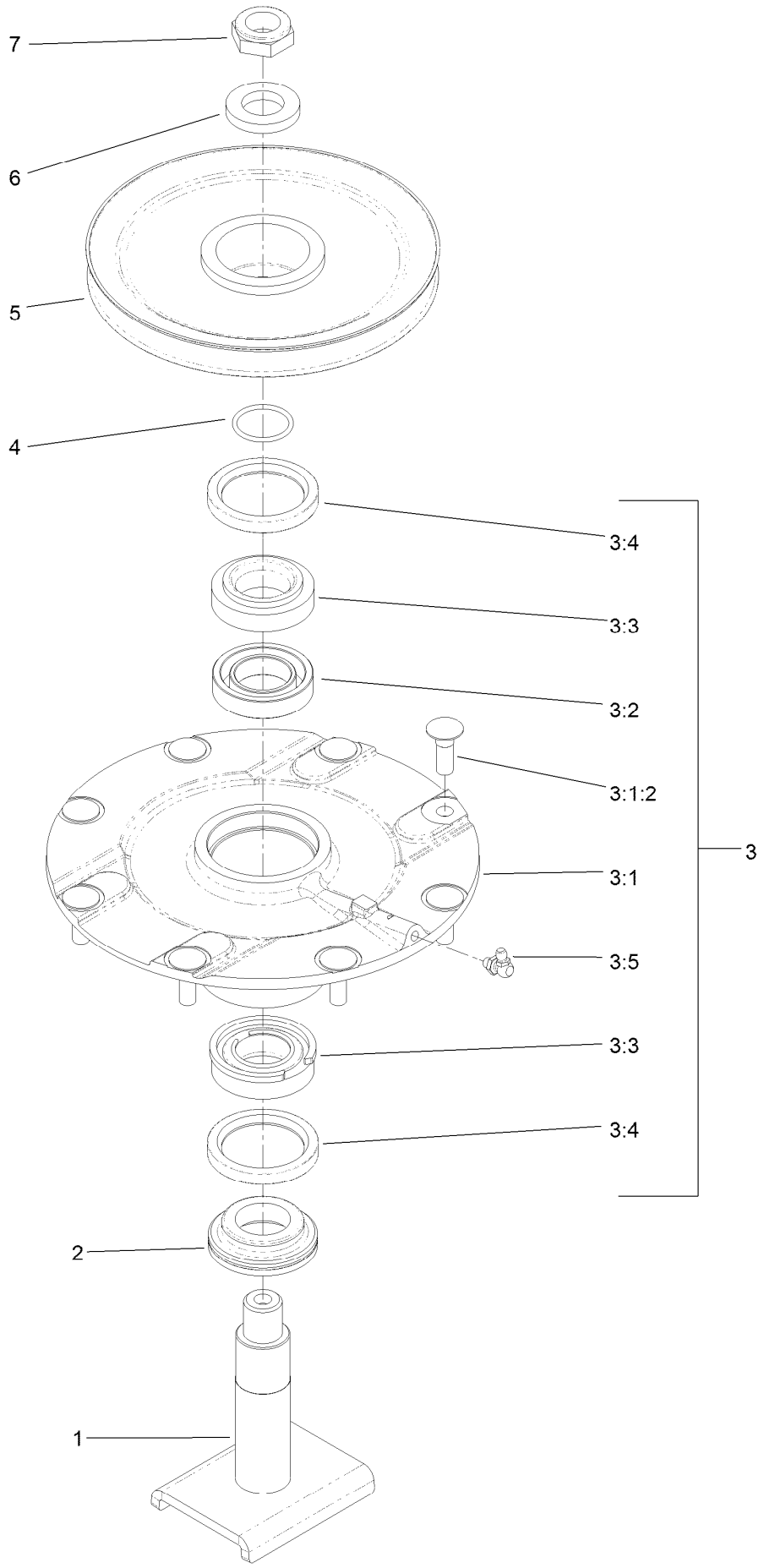

# High Driven Spindle Assembly No. 119-4549 (continued)

| Ref. | Part Number | Qty. | Description |
|---|---|---|---|
| 1 | 104-3554 | 1 | Shaft-Spindle |
| 2 | 69-6950 | 1 | Spacer-Shaft, Spindle |
| 3 | 119-4775 | 1 | Spindle Housing ASM |
| 3:1 | | 1 | Spindle ASM ● |
| 3:1:2 | 114-8195 | 8 | Bolt-Neck, Ribbed |
| 3:2 | 120-5577 | 1 | Bearing Spacer Set |
| 3:3 | 110-8297 | 1 | Bearing ASM |
| 3:4 | 253-154 | 2 | Seal-Oil |
| 3:5 | 302-60 | 1 | Fitting-Grease |
| 4 | 106-7159 | 1 | O-Ring |
| 5 | 104-3548 | 1 | Pulley-Driven, High |
| 6 | 120-5576 | 1 | Washer-Hardened |
| 7 | 3296-60 | 1 | Nut-Lock, NI |

● Not serviced separately

# Right Hand and Left Hand Deck Installation Assembly

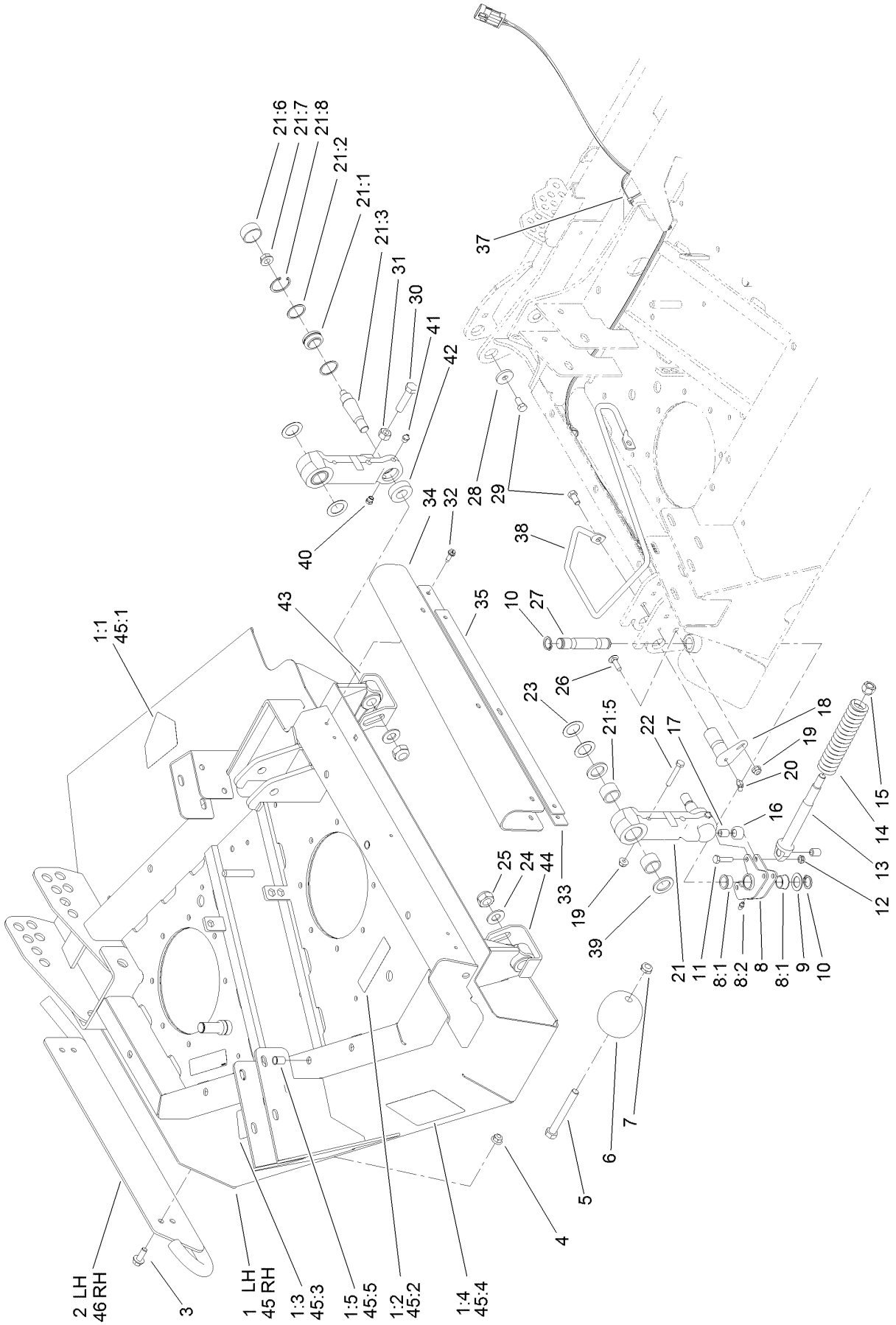

# Right Hand and Left Hand Deck Installation Assembly (continued)

| Ref. | Part Number | Qty. | Description |
|---|---|---|---|
| 1 | 110-3298 | 1 | RH Deck ASM |
| 1:1 | 120-6604 | 1 | Decal-Danger |
| 1:2 | 100-6578 | 2 | Decal-Danger |
| 1:3 | 93-7818 | 1 | Decal-Torque, Blade Bolt |
| 1:4 | 100-5622 | 1 | Decal-HOC |
| 1:5 | 32148-9 | 4 | Nut-Clinch |
| 2 | 105-7430-01 | 1 | RH Skid ASM |
| 3 | 3234-42 | 4 | Screw-HHF |
| 4 | 104-8301 | 4 | Nut-HF, NI |
| 5 | 325-17 | 2 | Screw-HH |
| 6 | 29-4820 | 2 | Roller |
| 7 | 3296-45 | 2 | Nut-Hex |
| 8 | 105-7469 | 2 | Latch ASM |
| 8:1 | 256-252 | 2 | Bearing-Flange |
| 8:2 | 302-5 | 1 | Fitting-Grease |
| 9 | 1278 | 2 | Washer |
| 10 | 32120-93 | 4 | Ring-Retaining |
| 11 | 322-6 | 6 | Screw-HH |
| 12 | 3296-47 | 6 | Nut-Lock, NI |
| 13 | 106-4317 | 2 | Support-Spring |
| 14 | 86-2560 | 2 | Spring-Comp |
| 15 | 242-50 | 2 | Nut-Lug |
| 16 | 86-2120 | 4 | Roller-Lock |
| 17 | 86-2090 | 6 | Bushing |
| 18 | 131-4293 | 4 | Pin Pivot |
| 19 | 104-8300 | 6 | Nut-HF, NI |
| 20 | 302-11 | 4 | Fitting-Lube, 45 DEG |
| 21 | 112-9116 | 4 | Link ASM |
| 21:1 | 105-7441 | 1 | Bearing-Spherical |
| 21:2 | 110-6198 | 2 | Washer-Flat |
| 21:3 | 105-7468 | 1 | Stud-Tapered |
| 21:5 | 106-7248 | 2 | Bushing |
| 21:6 | 110-6197 | 1 | Cap-Dust |
| 21:7 | 32128-42 | 1 | Nut-HF |
| 21:8 | 32151-34 | 1 | Ring-Retaining |
| 22 | 322-10 | 2 | Screw-HH |
| 23 | 9547 | 8 | Washer-Thrust |
| 24 | 3256-27 | 4 | Washer-Flat |
| 25 | 32152-6 | 4 | Nut-Lock, Cone |
| 26 | 3230-2 | 4 | Bolt-CARR |
| 27 | 105-7482 | 2 | Pin-Latch |
| 28 | 53-6380 | 2 | Washer-Flat |
| 29 | 323-4 | 4 | Screw-HH |
| 30 | 325-8 | 2 | Screw-HH |
| 31 | 3217-9 | 2 | Nut-HH |
| 32 | 32104-95 | 12 | Screw-HWH |
| 33 | 107-0170-03 | 2 | Strap-Wing |
| 34 | 106-4334 | 2 | Shield-Flex |
| 35 | 107-0171-03 | 2 | Strap-Shield |
| 37 | 3290-379 | 4 | Tie-Cable |
| 38 | 107-0182 | 1 | Guide-Hose, RH |
| 39 | 92-7845 | 4 | Spacer-Hardened |
| 40 | 302-39 | 4 | Fitting-Plug |
| 41 | 302-52 | 4 | Fitting-Grease |
| 42 | 110-6196 | 4 | Washer-Foam |
| 43 | 112-9106-01 | 2 | Skid-Link (Left Front, Right Rear) |
| 44 | 112-9105-01 | 2 | Skid-Link (Right Front, Left Rear) |
| 45 | 110-3299 | 1 | LH Deck ASM |
| 45:1 | 120-6604 | 1 | Decal-Danger |
| 45:2 | 100-6578 | 2 | Decal-Danger |
| 45:3 | 93-7818 | 1 | Decal-Torque, Blade Bolt |
| 45:4 | 100-5622 | 1 | Decal-HOC |
| 45:5 | 32148-9 | 4 | Nut-Clinch |
| 46 | 105-7437-01 | 1 | LH Skid ASM |

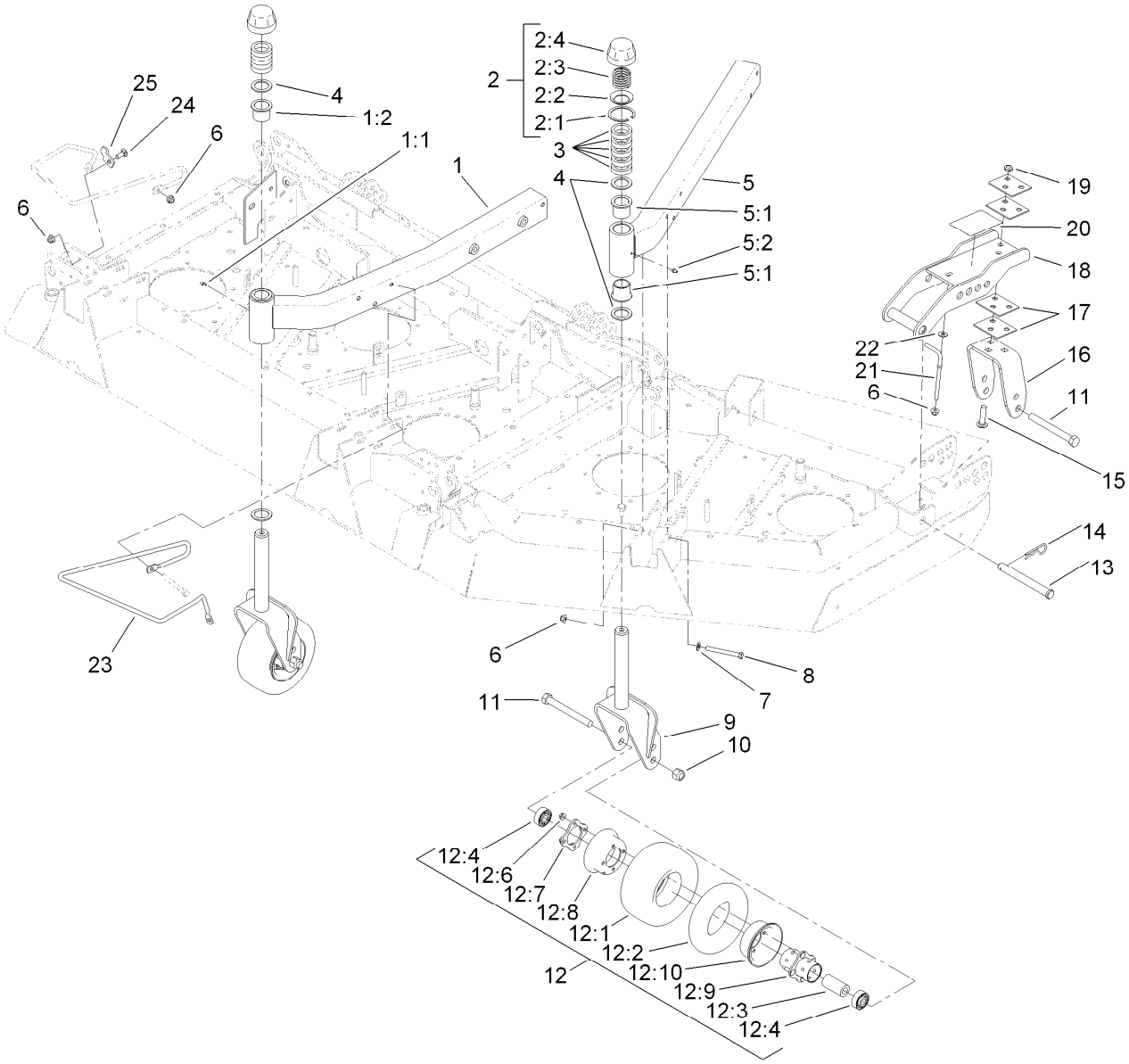


# Caster Wheel Assembly

| Ref. | Part Number | Qty. | Description |
|---|---|---|---|
| 1 | 105-7414 | 2 | Center Castor Arm ASM |
| 1:1 | 69-6470 | 2 | Bushing-Caster |
| 1:2 | 302-5 | 1 | Fitting-Grease |
| 2 | 92-9727 | 4 | HOC Cap ASM |
| 2:1 | 92-5581 | 1 | Ring-Retaining |
| 2:2 | 92-5583 | 1 | Washer-Cap |
| 2:3 | 92-9726 | 1 | Spring-Compression |
| 2:4 | 92-8861 | 1 | Cap-HOC |
| 3 | 69-1510 | 20 | Spacer |
| 4 | 69-6860 | 8 | Washer-Thrust |
| 5 | 105-7429 | 2 | Side Castor Arm ASM |
| 5:1 | 69-6470 | 2 | Bushing-Caster |
| 5:2 | 302-5 | 1 | Fitting-Grease |
| 6 | 104-8301 | 24 | Nut-HF, NI |
| 7 | 3256-24 | 18 | Washer-Flat |
| 8 | 323-15 | 20 | Screw-HH |
| 9 | 92-7750-01 | 4 | Fork-Castor |
| 10 | 3296-53 | 6 | Nut-Lock, NI |
| 11 | 327-24 | 6 | Screw-HH |
| 12 | 93-9938 | 6 | Wheel ASM |
| 12:1 | 93-9939 | 1 | Tire |

| Ref. | Part Number | Qty. | Description |
|---|---|---|---|
| 12:2 | 68-8950 | 1 | Tube-Inner (W/Valve) |
| 12:3 | 93-4241 | 1 | Spacer-Bearing, Inner |
| 12:4 | 120-3366 | 2 | Bearing |
| 12:6 | 32128-16 | 4 | Nut-HHF |
| 12:7 | 93-4242 | 1 | Plate |
| 12:8 | 93-4239 | 1 | Rim-Wheel, Half |
| 12:9 | 93-5980 | 1 | Hub |
| 12:10 | 95-2741 | 1 | Rim-Wheel, Half |
| 13 | 120-5587 | 4 | Pin-Clevis |
| 14 | 3290-343 | 4 | Pin-Hair |
| 15 | 3233-4 | 6 | Screw-CARR |
| 16 | 105-7457-01 | 2 | Fork-Rear |
| 17 | 104-7524 | 8 | Shim |
| 18 | 104-7529-01 | 2 | Bracket-Castor |
| 19 | 3296-45 | 6 | Nut-Hex |
| 20 | 100-5623 | 1 | Decal-HOC |
| 20 | 104-3579 | 1 | Decal-HOC |
| 21 | 106-2047 | 2 | Rod-Tension |
| 22 | 3256-3 | 2 | Washer-Flat |
| 23 | 107-0183 | 1 | Guide-Hose, LH |

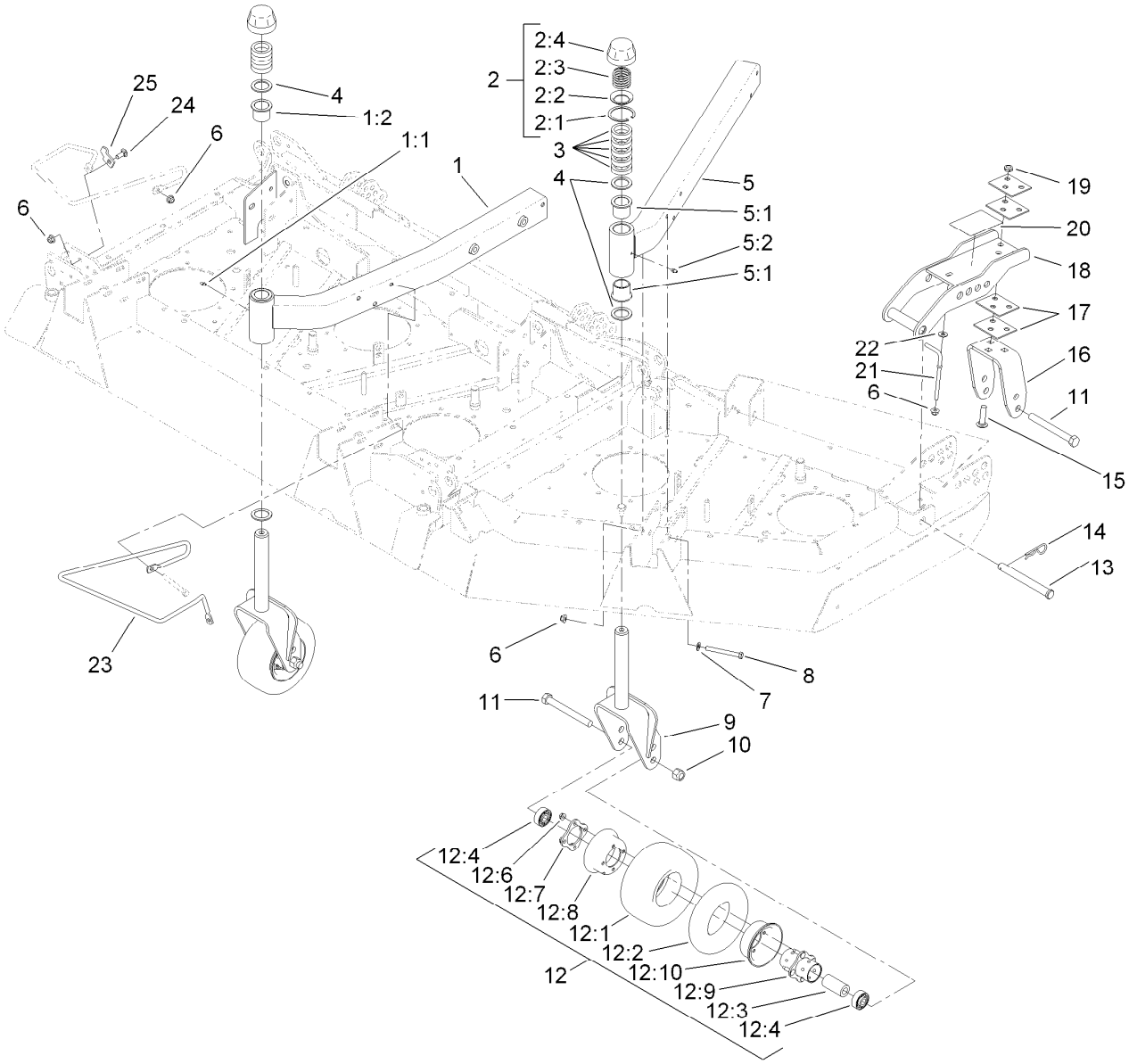


# Caster Wheel Assembly (continued)

| *Ref.* | *Part Number* | *Qty.* | *Description* |
|---|---|---|---|
| 24 | 3231-2 | 2 | Bolt-CARR |
| 25 | 107-0229 | 2 | Tab-Guide |

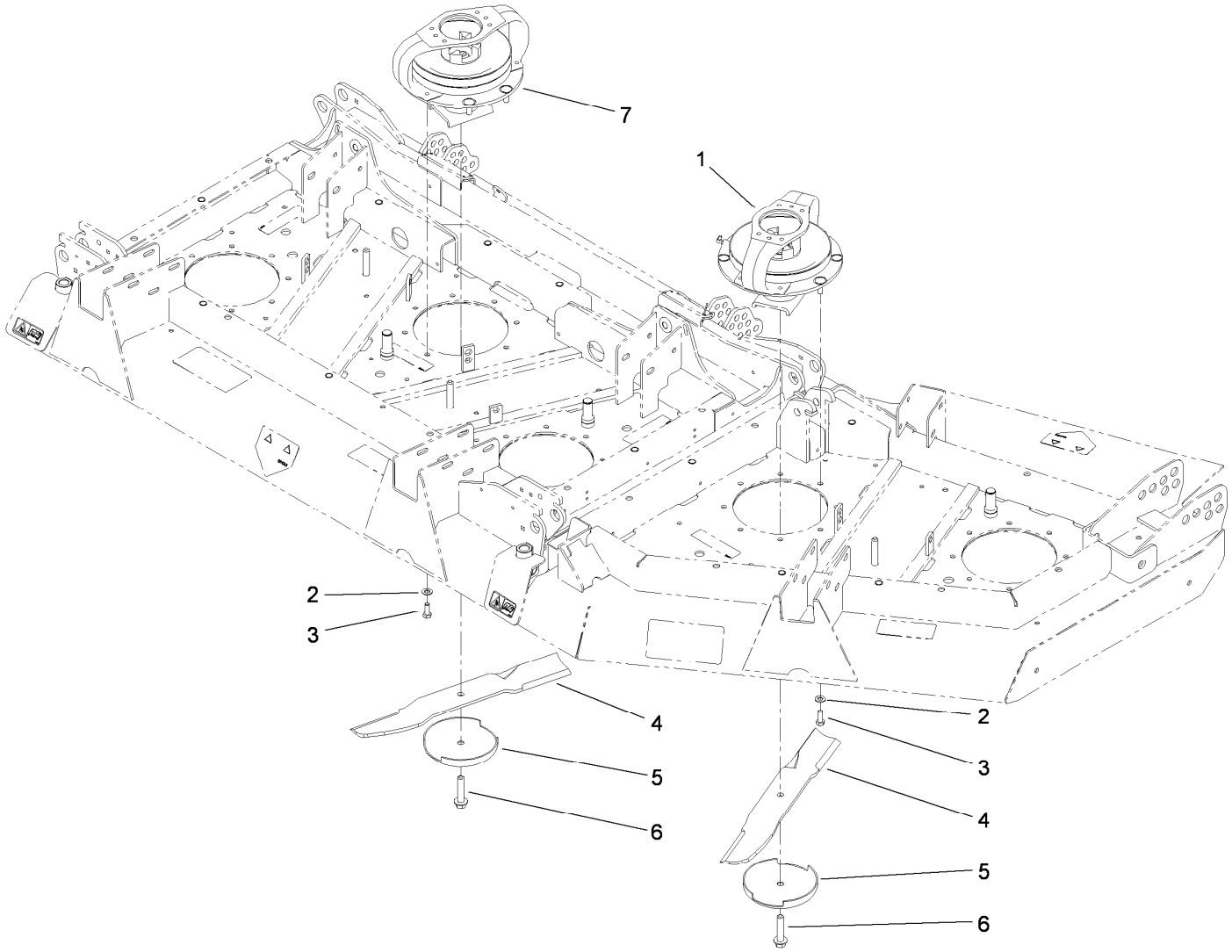


# Spindle and Blade Assembly

| *Ref.* | *Part Number* | *Qty.* | *Description* |
|---|---|---|---|
| 1 | 119-4547 | 2 | Driving Spindle ASM |
| 2 | 3256-24 | 12 | Washer-Flat |
| 3 | 323-6 | 12 | Screw-HH |
| 4 | 106-7166-03 | 7 | Blade-Combination (19 Inch) |
| 5 | 72-9361 | 7 | Cup-Scalp, Anti |
| 6 | 92-5816 | 7 | Bolt-Blade |
| 7 | 119-5298 | 1 | Double-Driven Spindle ASM |

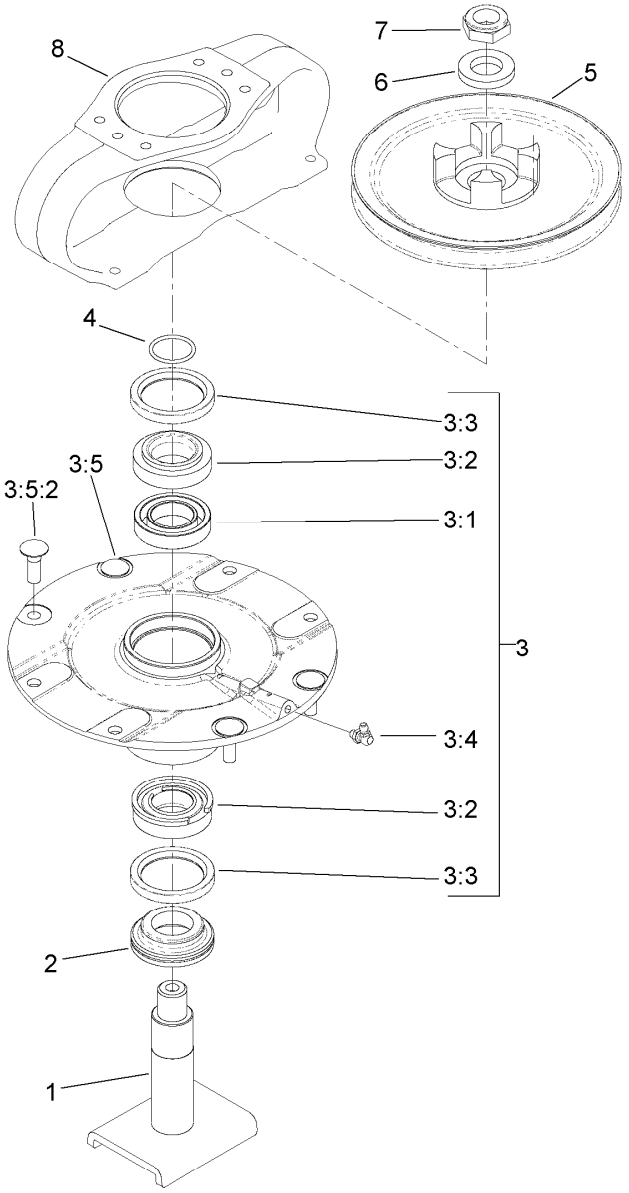


# Driving Spindle Assembly No. 119-4547

| Ref. | Part Number | Qty. | Description |
|---|---|---|---|
| 1 | 104-3554 | 1 | Shaft-Spindle |
| 2 | 69-6950 | 1 | Spacer-Shaft, Spindle |
| 3 | 119-4546 | 1 | Spindle Housing ASM |
| 3:1 | 120-5577 | 1 | Bearing Spacer Set |
| 3:2 | 110-8297 | 1 | Bearing ASM |
| 3:3 | 253-154 | 2 | Seal-Oil |
| 3:4 | 302-60 | 1 | Fitting-Grease |
| 3:5 | | 1 | Spindle ASM ● |
| 3:5:2 | 114-8195 | 4 | Bolt-Neck, Ribbed |
| 4 | 106-7159 | 1 | O-Ring |
| 5 | 104-3545 | 1 | Pulley-Driving |
| 6 | 120-5576 | 1 | Washer-Hardened |
| 7 | 3296-60 | 1 | Nut-Lock, NI |
| 8 | 104-3544 | 1 | Mount-Motor, Drive |

● Not serviced separately

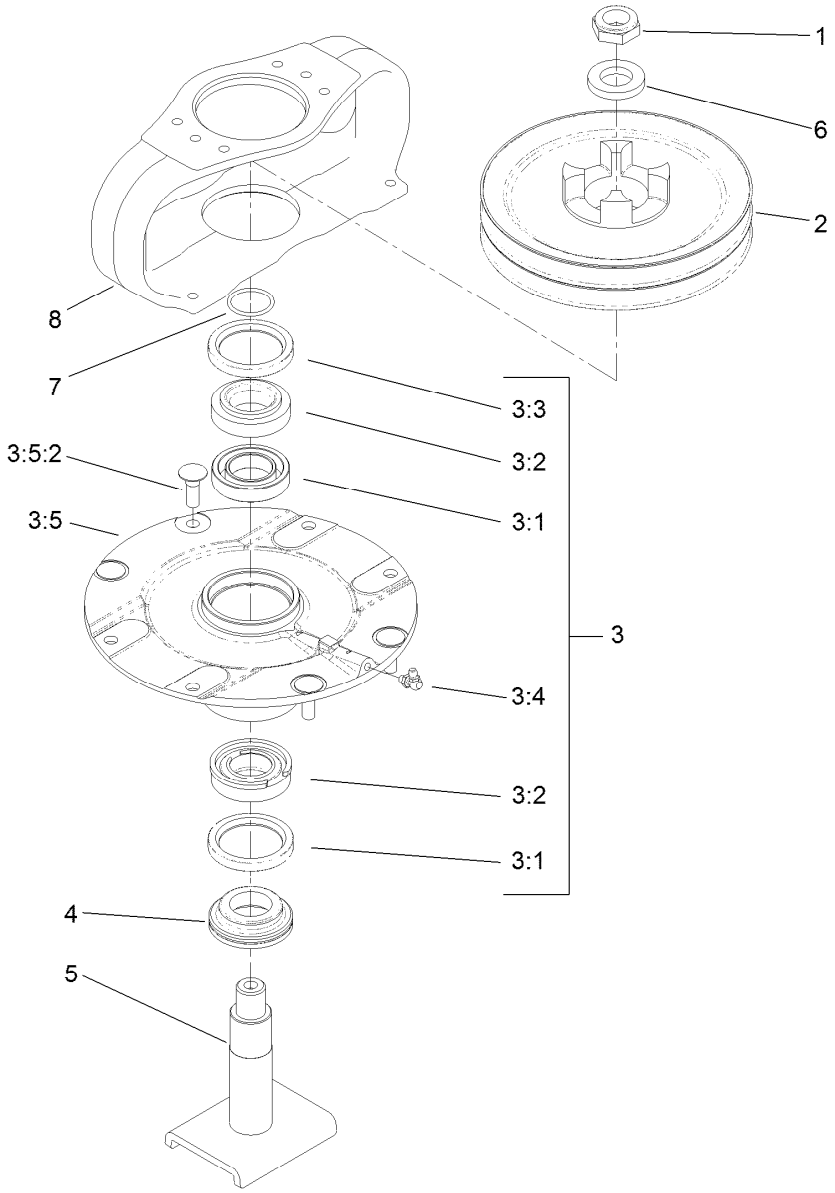


# Double Driven Spindle Assembly No. 119-5298

| Ref. | Part Number | Qty. | Description |
|---|---|---|---|
| 1 | 3296-60 | 1 | Nut-Lock, NI |
| 2 | 106-4269 | 1 | Pulley-Drive, Double |
| 3 | 119-4546 | 1 | Spindle Housing ASM |
| 3:1 | 120-5577 | 1 | Bearing Spacer Set |
| 3:2 | 110-8297 | 1 | Bearing ASM |
| 3:3 | 253-154 | 2 | Seal-Oil |
| 3:4 | 302-60 | 1 | Fitting-Grease |
| 3:5 | | 1 | Spindle ASM ● |
| 3:5:2 | 114-8195 | 4 | Bolt-Neck, Ribbed |
| 4 | 69-6950 | 1 | Spacer-Shaft, Spindle |
| 5 | 104-3554 | 1 | Shaft-Spindle |
| 6 | 120-5576 | 1 | Washer-Hardened |
| 7 | 106-7159 | 1 | O-Ring |
| 8 | 106-4268 | 1 | Mount-Motor, Drive |

● Not serviced separately

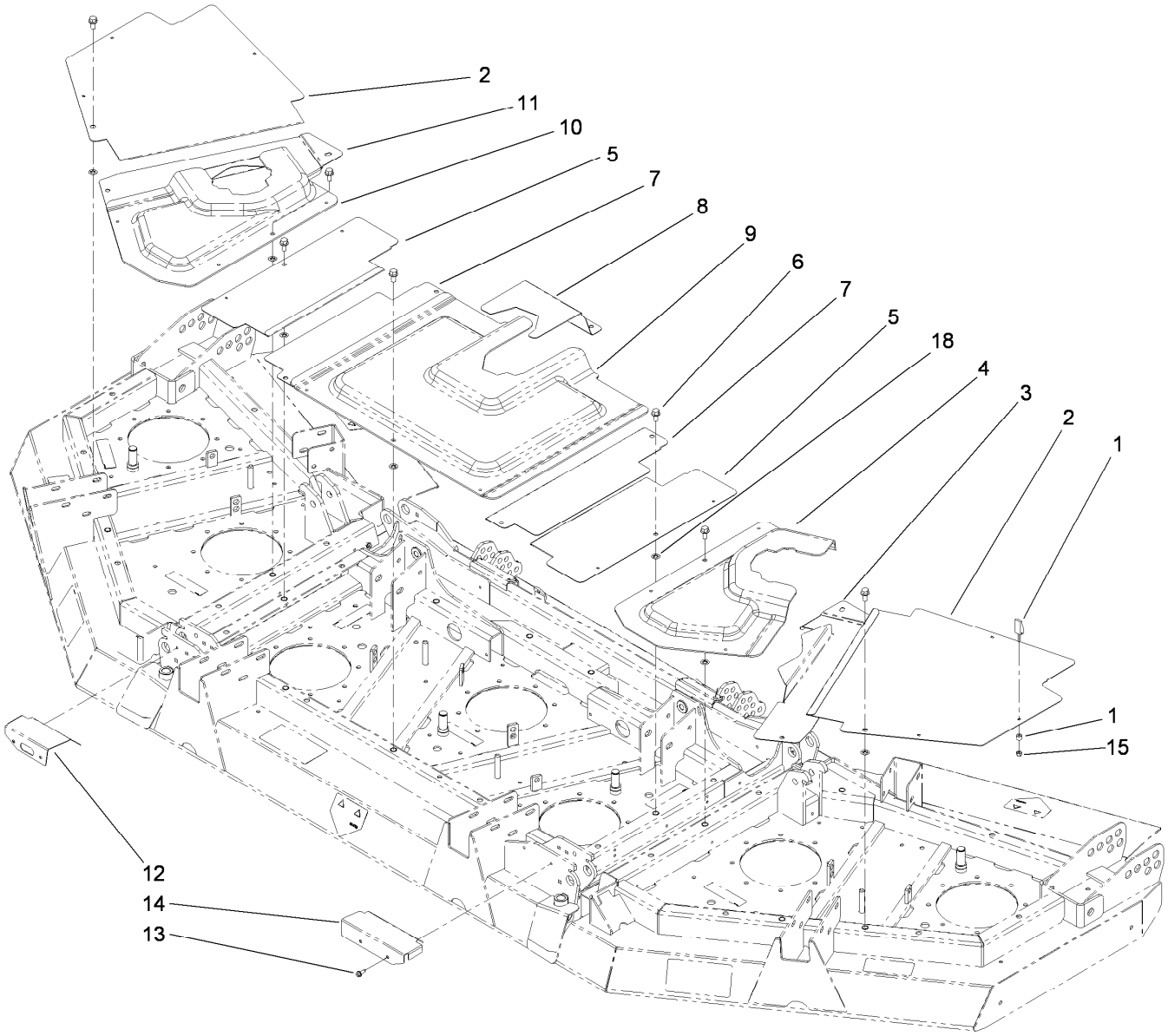


# Deck Cover Assembly

| Ref. | Part Number | Qty. | Description |
|---|---|---|---|
| 1 | 74-5950 | 18 | Latch-Swell |
| 2 | 106-4256-03 | 2 | Cover-Outer, Wing |
| 3 | 106-4258-03 | 1 | Cover-Inner, LH |
| 4 | 106-4260 | 1 | Cover-Mount, LH |
| 5 | 106-4252-03 | 2 | Cover-Outer, Center |
| 6 | 3234-1 | 17 | Screw-HHF |
| 7 | 106-4255-03 | 2 | Cover-Inner, Center |
| 8 | 106-4253-03 | 1 | Cover-Rear, Center |

| Ref. | Part Number | Qty. | Description |
|---|---|---|---|
| 9 | 106-4254 | 1 | Cover-Front, Center |
| 10 | 106-4259 | 1 | Cover-Mount, RH |
| 11 | 106-4257-03 | 1 | Cover-Inner, RH |
| 12 | 106-7173-01 | 1 | Shield-RH |
| 13 | 32104-95 | 4 | Screw-HWH |
| 14 | 106-7174-01 | 1 | Shield-LH |
| 15 | 1-804254 | 18 | Nut-Lock, HH |
| 18 | 107-3154 | 7 | Nut-Push |

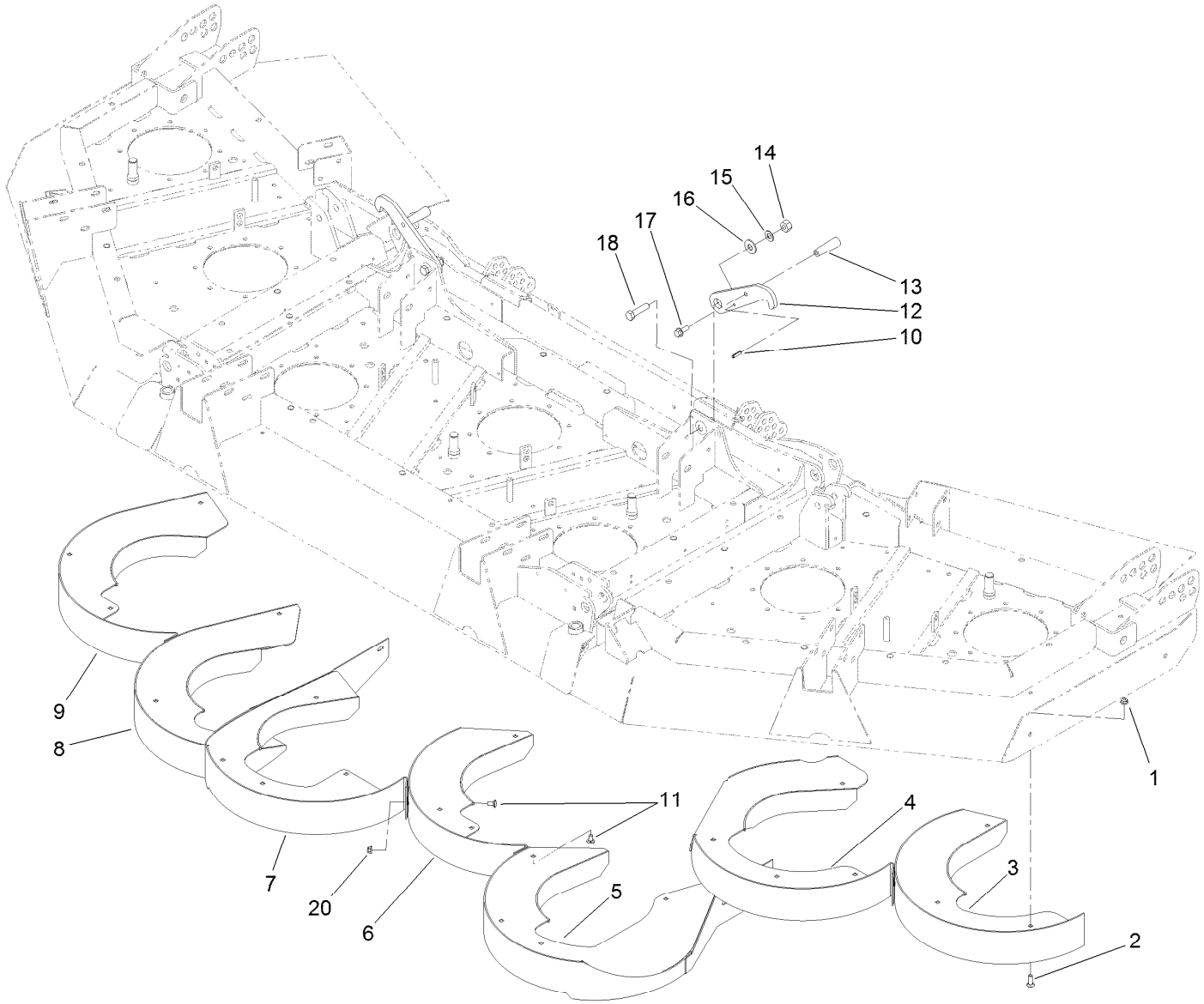


# Rear Discharge Baffle Assembly

| Ref. | Part Number | Qty. | Description |
|---|---|---|---|
| 1 | 104-8300 | 24 | Nut-HF, NI |
| 2 | 3230-22 | 23 | Screw-CARR |
| 3 | 106-4308-01 | 1 | LH Out Chamber ASM |
| 4 | 106-4304-01 | 1 | LH Inside Chamber ASM |
| 5 | 106-4291-01 | 1 | LH Center Chamber ASM |
| 6 | 106-4294-01 | 1 | Center Chamber ASM |
| 7 | 106-4286-01 | 1 | RH Center Chamber ASM |
| 8 | 106-4298-01 | 1 | RH Inside Chamber ASM |
| 9 | 106-4301-01 | 1 | RH Out Chamber ASM |
| 10 | 32121-24 | 2 | Pin-Spring |

| Ref. | Part Number | Qty. | Description |
|---|---|---|---|
| 11 | 3230-18 | 5 | Screw-CARR |
| 12 | 106-4340-01 | 2 | Latch-Wing |
| 13 | 233-39 | 2 | Knob-Control |
| 14 | 3296-25 | 2 | Nut-Lock, NI |
| 15 | 3290-483 | 2 | Washer-Conical |
| 16 | 3256-6 | 2 | Washer-Flat |
| 17 | 3234-11 | 2 | Screw-HHF |
| 18 | 325-8 | 2 | Screw-HH |
| 20 | 104-8300 | 4 | Nut-HF, NI |

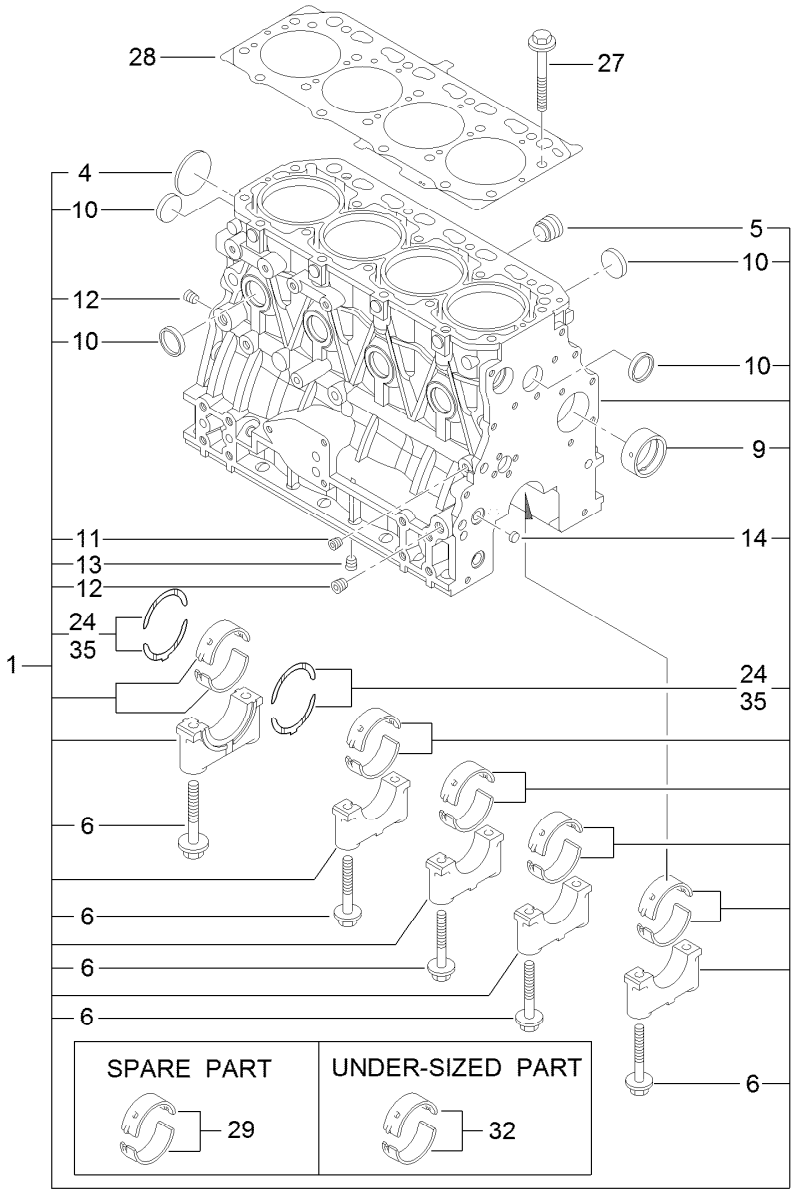


# Cylinder Block Assembly

| Ref. | Part Number | Qty. | Description |
|---|---|---|---|
| 1 | 127-3127 | 1 | Cylinder Block ASM |
| 4 | 125-6980 | 1 | Plug |
| 5 | 125-7170 | 1 | Plug |
| 6 | 125-7007 | 10 | Bolt |
| 9 | 125-7108 | 1 | Bushing |
| 10 | 125-7239 | 8 | Plug |
| 11 | 125-6969 | 1 | Plug |
| 12 | 125-6973 | 2 | Plug |

| Ref. | Part Number | Qty. | Description |
|---|---|---|---|
| 13 | 125-6973 | 1 | Plug |
| 14 | 125-7237 | 1 | Plug |
| 24 | 125-7010 | 2 | Metal-Thrust |
| 27 | 125-7006 | 18 | Bolt |
| 28 | 127-3126 | 1 | Gasket-Head, Cylinder |
| 29 | 125-6981 | 5 | Metal-Main |
| 32 | 125-7009 | 5 | Metal-Main (0.25) |
| 35 | 125-7011 | 1 | Metal-Thrust (0.25) |

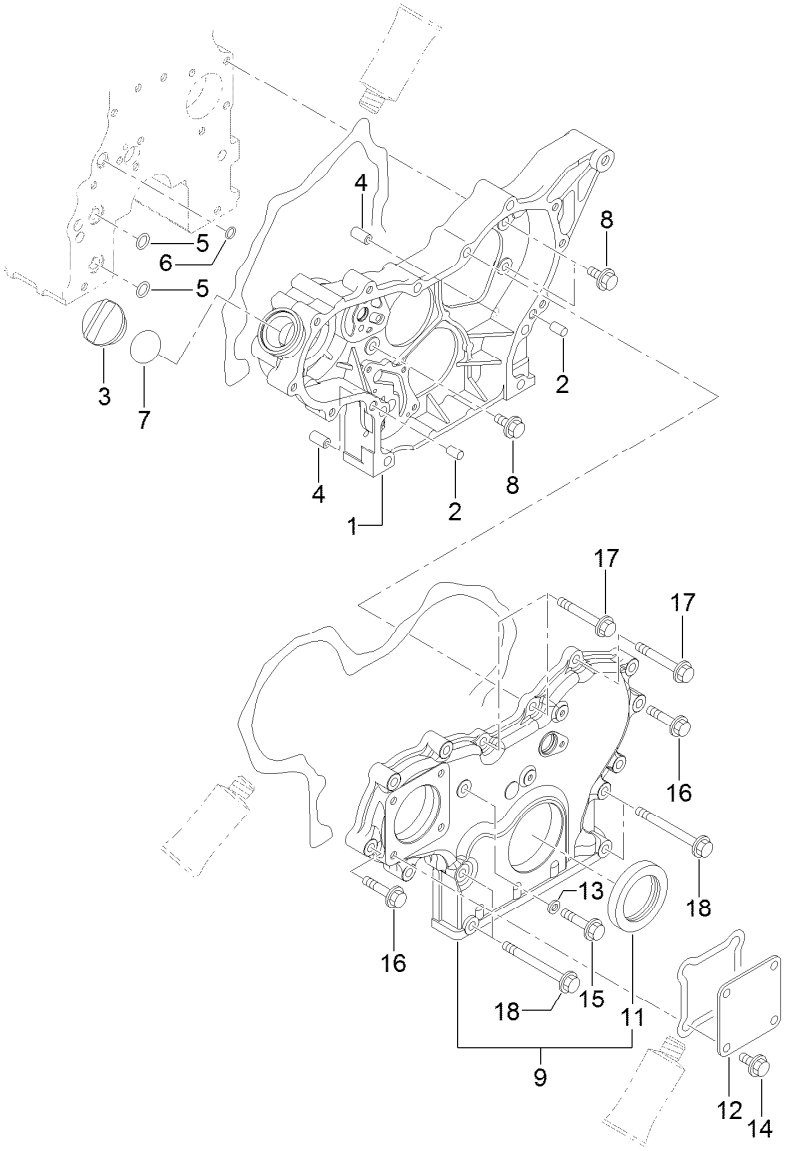


# Gear Housing Assembly

| Ref. | Part Number | Qty. | Description |
|---|---|---|---|
| 1 | 127-3023 | 1 | Case-Gear |
| 2 | 125-6995 | 2 | Pin |
| 3 | 125-6972 | 1 | Cover-Filler |
| 4 | 125-7107 | 2 | Pipe |
| 5 | 125-6909 | 2 | O-Ring |
| 6 | 127-2973 | 1 | O-Ring |
| 7 | 125-7197 | 1 | O-Ring |
| 8 | 125-7214 | 3 | Bolt |
| 9 | 127-3024 | 1 | Gearcase Cover ASM |

| Ref. | Part Number | Qty. | Description |
|---|---|---|---|
| 11 | 125-6944 | 1 | Seal-Oil |
| 12 | 125-6977 | 1 | Cover |
| 13 | 125-7174 | 1 | Washer-Seal |
| 14 | 125-7214 | 4 | Bolt |
| 15 | 125-7217 | 1 | Bolt |
| 16 | 125-7218 | 7 | Bolt |
| 17 | 125-7222 | 3 | Bolt |
| 18 | 125-7224 | 4 | Bolt |

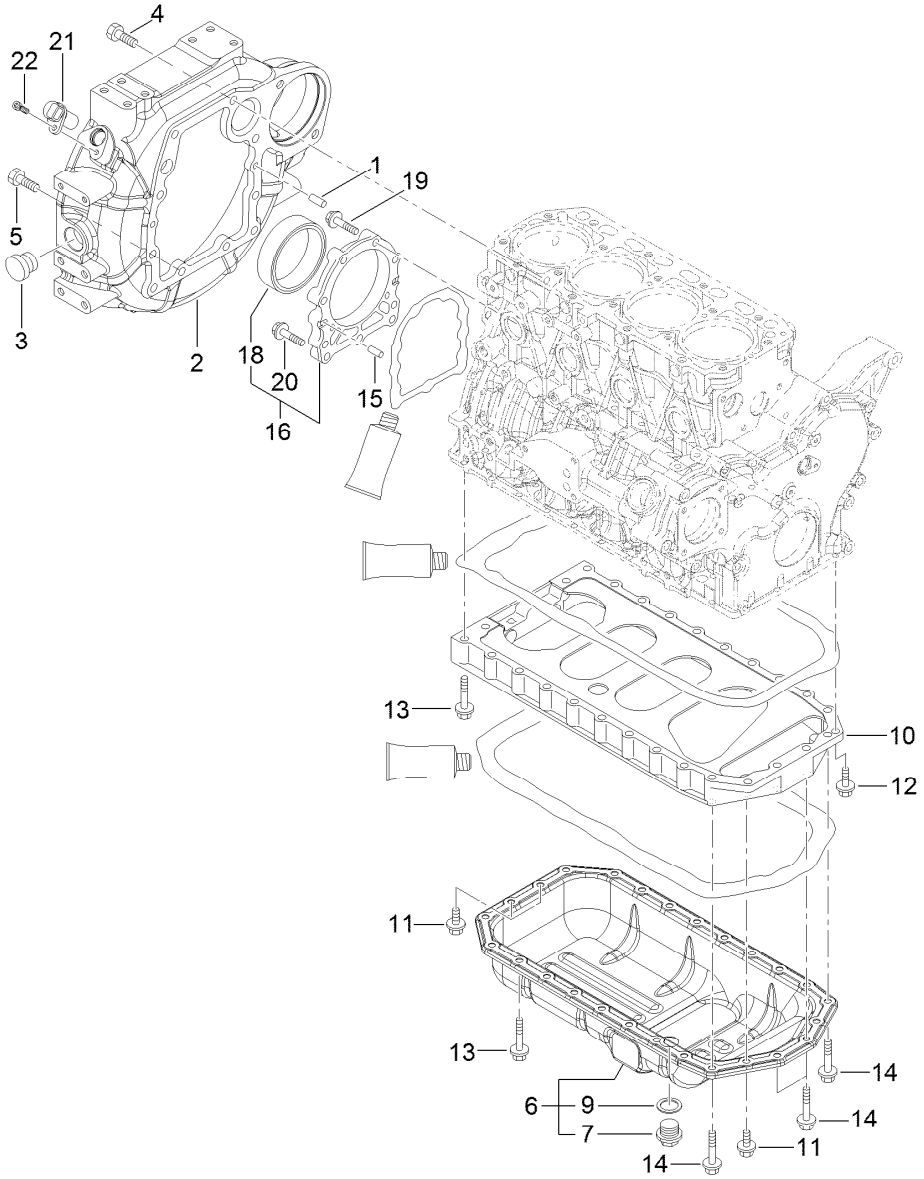


# Flywheel Housing and Oil Sump Assembly

| Ref. | Part Number | Qty. | Description |
|---|---|---|---|
| 1 | 125-6995 | 2 | Pin |
| 2 | 127-3025 | 1 | Housing-Flywheel |
| 3 | 125-6910 | 1 | Cap |
| 4 | 125-7226 | 6 | Bolt |
| 5 | 125-7227 | 4 | Bolt |
| 6 | 125-7241 | 1 | Oil Sump ASM |
| 7 | 125-6912 | 1 | Plug-Drain |
| 9 | 125-7177 | 1 | Washer-Seal |
| 10 | 125-7035 | 1 | Spacer |
| 11 | 125-7214 | 4 | Bolt |

| Ref. | Part Number | Qty. | Description |
|---|---|---|---|
| 12 | 125-7215 | 2 | Bolt |
| 13 | 125-7219 | 20 | Bolt |
| 14 | 125-7220 | 4 | Bolt |
| 15 | 125-6995 | 2 | Pin |
| 16 | 125-6996 | 1 | Case ASM |
| 18 | 125-7106 | 1 | Seal-Oil |
| 19 | 125-7045 | 6 | Bolt |
| 20 | 125-7217 | 3 | Bolt |
| 21 | 127-3062 | 1 | Sensor-Rev, Flywheel |
| 22 | 127-3184 | 1 | Bolt |

# Cylinder Head and Cover Assembly

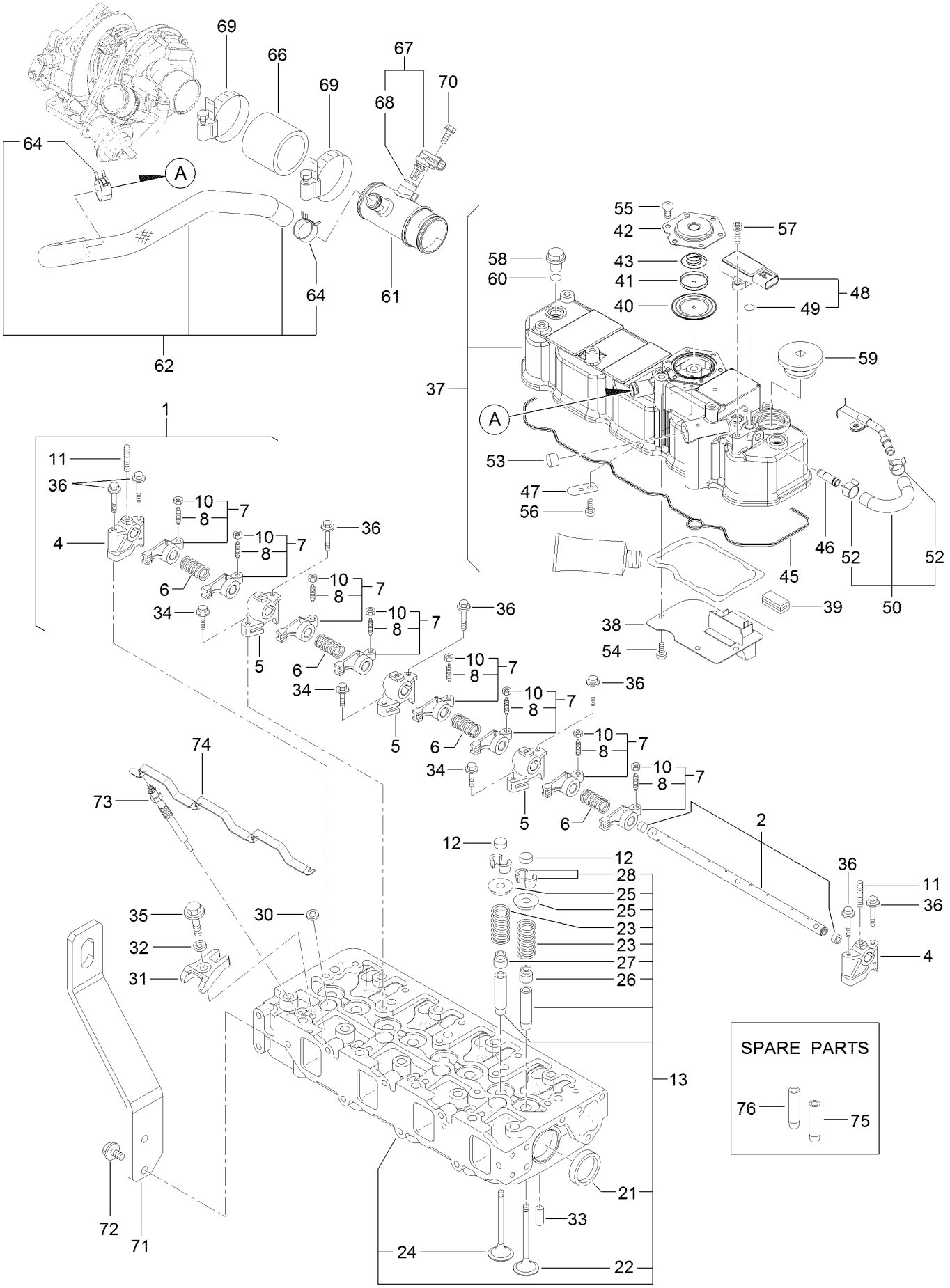

# Cylinder Head and Cover Assembly (continued)

| Ref. | Part Number | Qty. | Description |
|---|---|---|---|
| 1 | 127-3005 | 1 | Shaft ASM |
| 2 | 127-3006 | 1 | Shaft |
| 4 | 127-2974 | 2 | Support |
| 5 | 127-2975 | 3 | Support |
| 6 | 127-2995 | 4 | Spring |
| 7 | 127-2989 | 8 | Arm-Rocker |
| 8 | 125-7013 | 8 | Screw-Adjust, Valve |
| 10 | 125-7014 | 8 | Nut |
| 11 | 127-3183 | 3 | Stud |
| 12 | 127-2996 | 8 | Cap-Valve |
| 13 | 127-3132 | 1 | Cylinder Head ASM |
| 21 | 125-7240 | 2 | Plug |
| 22 | 127-2990 | 4 | Valve |
| 23 | 127-3012 | 8 | Spring |
| 24 | 127-2994 | 4 | Valve |
| 25 | 127-3013 | 8 | Retainer-Spring |
| 26 | 127-2986 | 4 | Seal-Stem, Valve |
| 27 | 127-3027 | 4 | Seal-Stem, Valve |
| 28 | 127-3186 | 8 | Pin-Cotter |
| 30 | 127-3021 | 4 | Gasket-Injector |
| 31 | 127-3028 | 4 | Retainer-Injector |
| 32 | 127-2980 | 4 | Washer-Injector |
| 33 | 125-7184 | 2 | Pin-Spring |
| 34 | 125-7215 | 3 | Bolt |
| 35 | 125-7217 | 4 | Bolt |
| 36 | 125-7220 | 7 | Bolt |
| 37 | 127-3131 | 1 | Cylinder Head Cover ASM |
| 38 | 127-2988 | 1 | Plate |
| 39 | 125-7012 | 1 | Baffle |
| 40 | 125-6959 | 1 | Diaphragm |
| 41 | 125-6960 | 1 | Plate |
| 42 | 125-6961 | 1 | Plate-Breather |
| 43 | 125-6962 | 1 | Spring-Diaphragm |
| 45 | 127-3106 | 1 | Gasket-Cover |
| 46 | 127-3026 | 1 | Joint |
| 47 | 125-6994 | 1 | Spring |
| 48 | 127-3029 | 1 | Sensor-Pressure |
| 49 | 127-3032 | 2 | O Ring-Sensor, Pressure |
| 50 | 127-3040 | 1 | Hose ASM |
| 52 | 127-3041 | 2 | Clip-Hose |
| 53 | 125-6913 | 1 | Plug |
| 54 | 125-7186 | 4 | Screw |
| 55 | 125-7186 | 6 | Screw |
| 56 | 125-7186 | 1 | Screw |
| 57 | 127-3184 | 2 | Bolt |
| 58 | 125-6974 | 3 | Knob |
| 59 | 127-2978 | 1 | Plug |
| 60 | 93-0418 | 3 | O-Ring |
| 61 | 127-3128 | 1 | Joint-Breather |
| 62 | 127-3129 | 1 | Breather Hose ASM |
| 64 | 125-7040 | 2 | Clip-Hose |
| 66 | 127-3133 | 1 | Hose-Intake |
| 67 | 127-3030 | 1 | Sensor-Temp, Air |
| 68 | 127-3033 | 1 | O-Ring |
| 69 | 125-7190 | 2 | Clamp-Hose |
| 70 | 125-7208 | 1 | Bolt |
| 71 | 127-3130 | 1 | Lifter-Engine |
| 72 | 125-7214 | 2 | Bolt |
| 73 | 127-2991 | 4 | Plug-Glow |
| 74 | 127-3123 | 1 | Connector-Glow Plug |
| 75 | 127-2979 | 4 | Guide |
| 76 | 127-2997 | 4 | Guide-Valve |

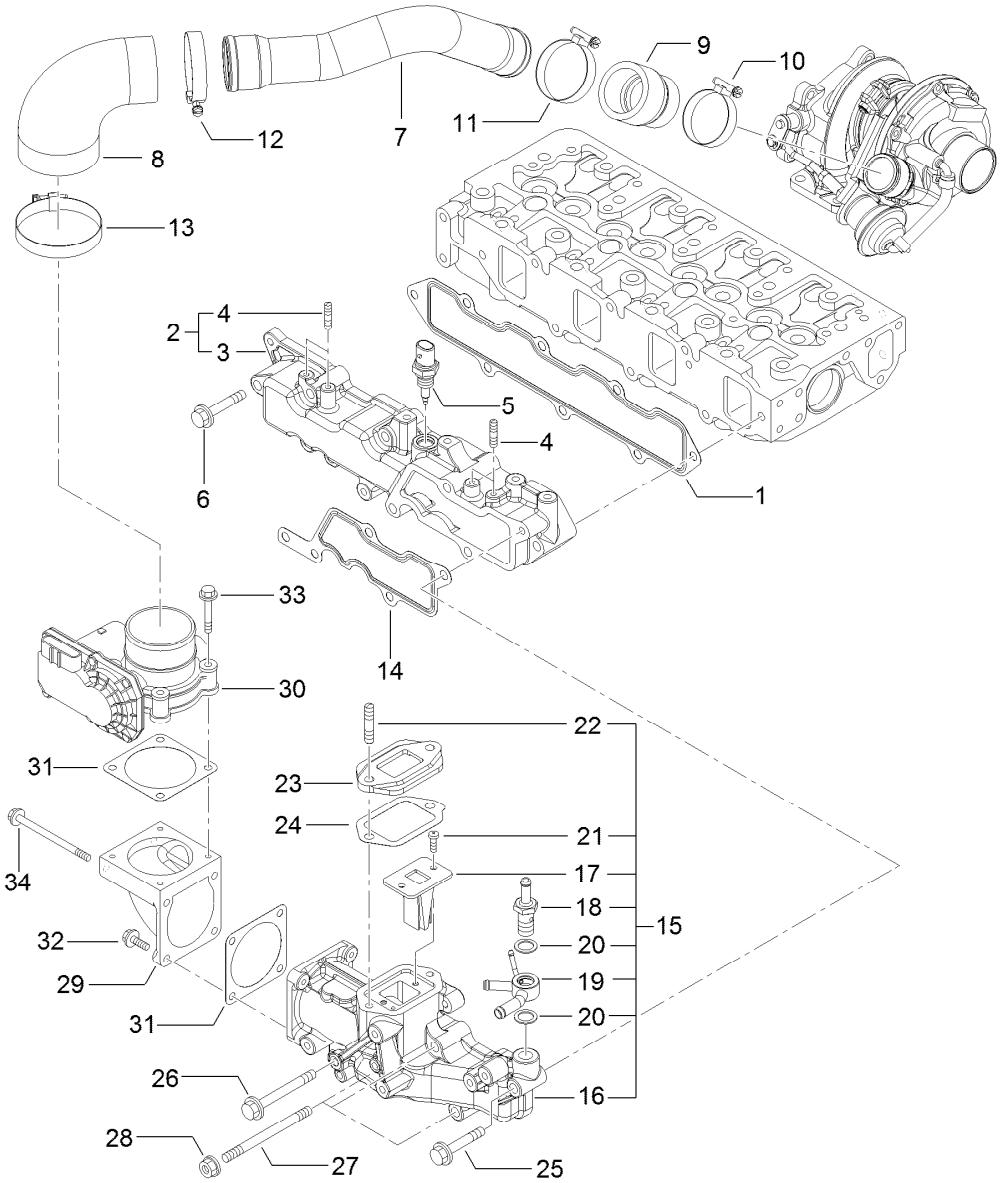


# Suction Manifold Assembly

| Ref. | Part Number | Qty. | Description |
|---|---|---|---|
| 1 | 127-3107 | 1 | Gasket-Manifold, Intake |
| 2 | 127-3135 | 1 | Intake Manifold ASM |
| 3 | 127-3134 | 1 | Manifold-Intake |
| 4 | 127-3180 | 4 | Stud |
| 5 | 127-3031 | 1 | Sensor-Temp, Air |
| 6 | 125-7220 | 5 | Bolt |
| 7 | 127-3152 | 1 | Duct-Suction |
| 8 | 127-3096 | 1 | Joint-Rubber |
| 9 | 127-3153 | 1 | Joint-Rubber |
| 10 | 125-7189 | 1 | Clamp-Hose |
| 11 | 127-3170 | 1 | Clamp-Hose |
| 12 | 125-7190 | 1 | Clamp-Hose |
| 13 | 127-3171 | 1 | Clamp-Hose |
| 14 | 127-3034 | 1 | Gasket-Collector |
| 15 | 127-3093 | 1 | Intake Collector ASM |
| 16 | 127-3092 | 1 | Collector-Intake |
| 17 | 127-3139 | 1 | Valve-Reed |

| Ref. | Part Number | Qty. | Description |
|---|---|---|---|
| 18 | 127-3080 | 1 | Joint-Hose |
| 19 | 127-3081 | 1 | Joint-Hose |
| 20 | 127-3166 | 2 | Washer-Seal |
| 21 | 127-3168 | 2 | Screw |
| 22 | 127-3181 | 2 | Stud |
| 23 | 127-3045 | 1 | Spacer-Valve, E G R |
| 24 | 127-3046 | 1 | Gasket-E G R |
| 25 | 125-7220 | 1 | Bolt |
| 26 | 127-3178 | 1 | Bolt |
| 27 | 127-3182 | 3 | Stud |
| 28 | 125-7229 | 3 | Nut |
| 29 | 127-3035 | 1 | Bend-Inlet |
| 30 | 127-3036 | 1 | Body-Throttle |
| 31 | 127-3037 | 2 | Gasket-Throttle |
| 32 | 125-7209 | 2 | Bolt |
| 33 | 125-7211 | 4 | Bolt |
| 34 | 127-3177 | 2 | Bolt |

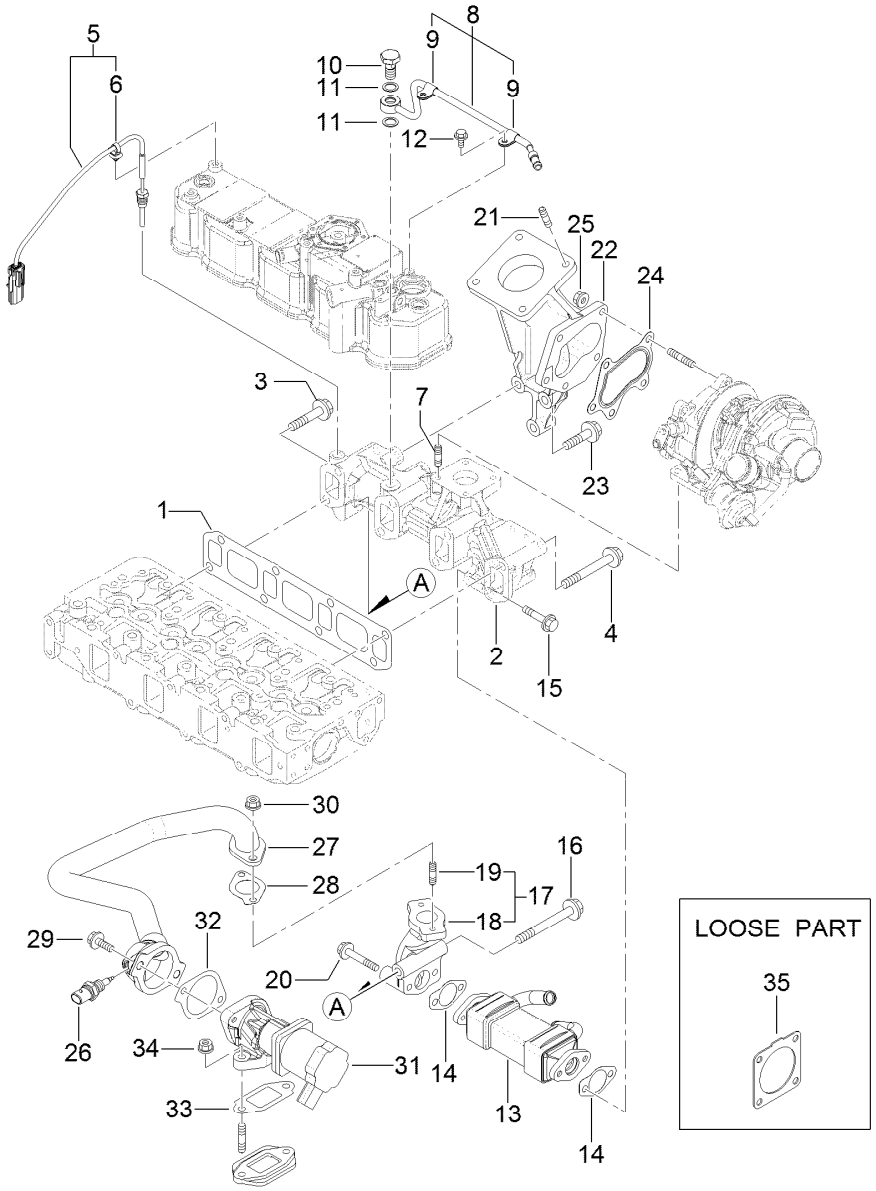


# Exhaust Manifold Assembly

| Ref. | Part Number | Qty. | Description |
|---|---|---|---|
| 1 | 127-3108 | 1 | Gasket-Manifold, Exhaust |
| 2 | 127-3136 | 1 | Manifold-Exhaust |
| 3 | 127-3094 | 1 | Bolt |
| 4 | 127-3044 | 7 | Bolt-M10 |
| 5 | 127-3140 | 1 | Sensor-Temp, Exhaust |
| 6 | 127-3087 | 1 | Band-Clip |
| 7 | 125-7043 | 4 | Stud |
| 8 | 127-3038 | 1 | Exhaust Pipe ASM |
| 9 | 127-3173 | 2 | Clamp |
| 10 | 127-3039 | 1 | Bolt-Joint, Pipe |
| 11 | 127-3174 | 2 | Gasket |
| 12 | 125-7206 | 2 | Bolt |
| 13 | 127-3042 | 1 | Cooler-E G R |
| 14 | 127-3043 | 2 | Gasket-Cooler, E G R |
| 15 | 127-2976 | 2 | Bolt |
| 16 | 127-3022 | 1 | Bolt-Flange |
| 17 | 127-3048 | 1 | E G R Pipe ASM |
| 18 | 127-3049 | 1 | Pipe-Out, E G R |

| Ref. | Part Number | Qty. | Description |
|---|---|---|---|
| 19 | 125-7043 | 2 | Stud |
| 20 | 125-7220 | 2 | Bolt |
| 21 | 127-2984 | 4 | Stud |
| 22 | 127-3137 | 1 | Pipe-Exhaust |
| 23 | 127-3138 | 3 | Bolt-Flange |
| 24 | 125-7071 | 1 | Gasket |
| 25 | 125-7229 | 5 | Nut |
| 26 | 127-3047 | 1 | Sensor-Gas Temp, E G R |
| 27 | 127-3109 | 1 | E G R Pipe ASM |
| 28 | 127-3016 | 1 | Gasket |
| 29 | 125-7215 | 2 | Bolt |
| 30 | 125-7229 | 2 | Nut |
| 31 | 127-3110 | 1 | Valve-E G R |
| 32 | 127-3050 | 1 | Gasket-Intake Valve, E G R |
| 33 | 127-3051 | 1 | Gasket-Out Valve, E G R |
| 34 | 125-7229 | 2 | Nut |
| 35 | 127-3019 | 1 | Gasket |

# Diesel Particulate Filter Assembly

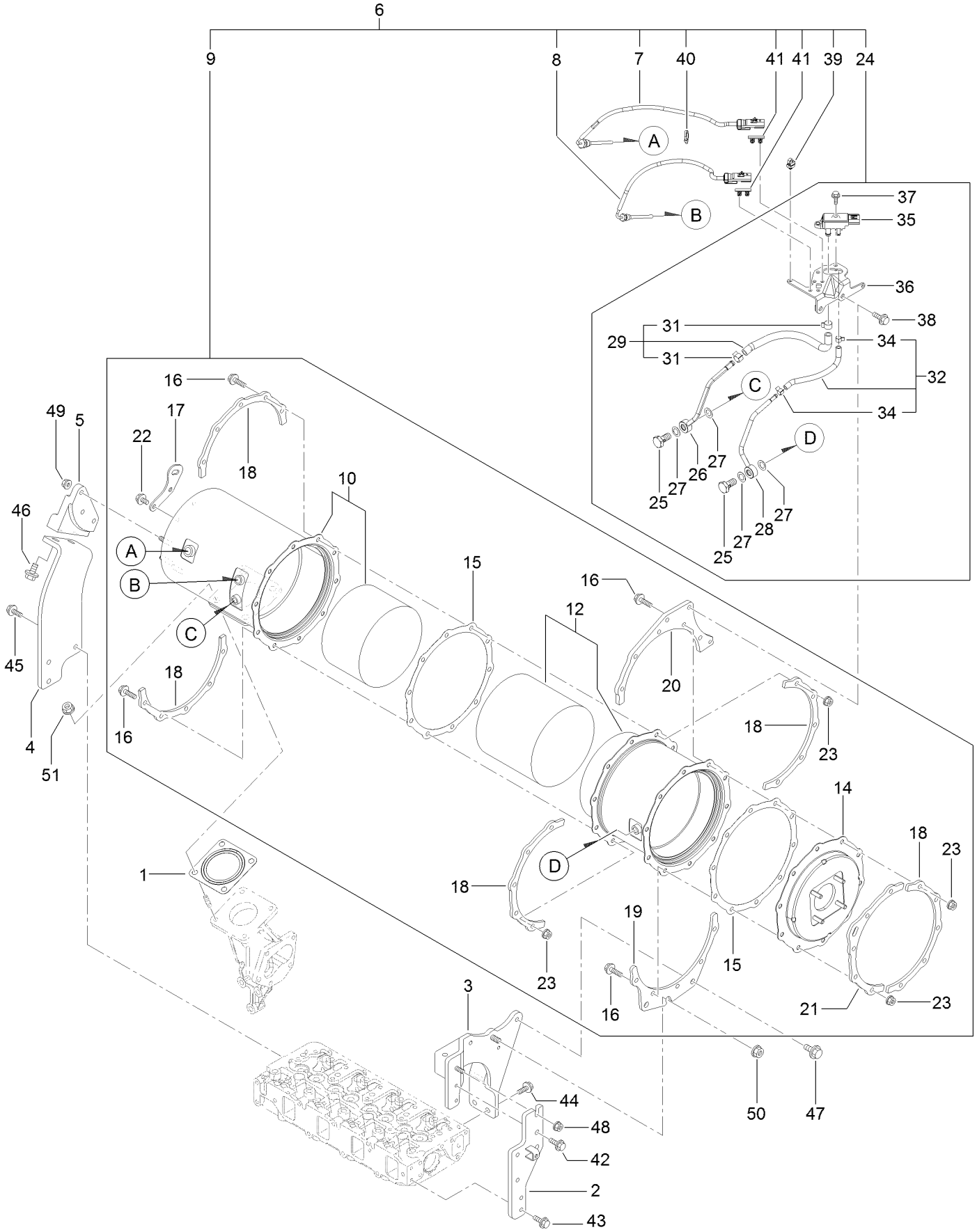

# Diesel Particulate Filter Assembly (continued)

| Ref. | Part Number | Qty. | Description |
|---|---|---|---|
| 1 | 127-2987 | 1 | Gasket-Silencer |
| 2 | 127-3095 | 1 | Stay-D P F |
| 3 | 127-3148 | 1 | Stay- D P F |
| 4 | 127-3149 | 1 | Stay-D P F |
| 5 | 127-3150 | 1 | Stay-D P F |
| 6 | 127-3159 | 1 | D P F Unit |
| 7 | 127-4764 | 1 | Sensor-Temp, Exhaust |
| 8 | 127-3112 | 1 | Sensor-Temp, Exhaust |
| 9 | 127-3157 | 1 | D P F ASM |
| 10 | 127-3141 | 1 | Case-Doc |
| 12 | 127-3142R | 1 | Case-Filter, Soot-Recon |
| 12 | 127-3142 | 1 | Case-Filter, Soot |
| 14 | 127-3143 | 1 | Flange-Outlet |
| 15 | 127-3162 | 2 | Gasket-D P F |
| 16 | 127-3055 | 20 | Bolt |
| 17 | 127-3144 | 1 | Lifter-D P F |
| 18 | 127-3145 | 5 | Stiffener-D P F, A |
| 19 | 127-3146 | 1 | Stiffener-D P F, B |
| 20 | 127-3158 | 1 | Stiffener-D P F, D |
| 21 | 127-3147 | 1 | Stiffener-D P F, C |
| 22 | 125-7213 | 2 | Bolt |
| 23 | 125-7229 | 20 | Nut |
| 24 | 127-3163 | 1 | Pressure Sensor Unit |
| 25 | 127-3039 | 2 | Bolt-Joint, Pipe |
| 26 | 127-3164 | 1 | Exhaust Pressure Pipe ASM |

| Ref. | Part Number | Qty. | Description |
|---|---|---|---|
| 27 | 127-3056 | 4 | Gasket-Sensor |
| 28 | 127-3165 | 1 | Exhaust Pressure Pipe ASM |
| 29 | 127-3114 | 1 | Exhaust Hose ASM |
| 31 | 127-3057 | 2 | Clip-Hose |
| 32 | 127-3059 | 1 | Exhaust Pressure Hose ASM |
| 34 | 127-3058 | 2 | Clip-Hose |
| 35 | 127-3060 | 1 | Sensor-Pressure |
| 36 | 127-3061 | 1 | Bracket-Sensor, Pressure |
| 37 | 125-7208 | 2 | Bolt |
| 38 | 125-7595 | 2 | Bolt |
| 39 | 127-3087 | 1 | Band-Clip |
| 40 | 127-3124 | 1 | Band |
| 41 | 127-3088 | 2 | Clip-Connnector |
| 42 | 125-7595 | 2 | Bolt |
| 43 | 125-7595 | 2 | Bolt |
| 44 | 125-7595 | 2 | Bolt |
| 45 | 125-7595 | 3 | Bolt |
| 46 | 127-3179 | 2 | Bolt |
| 47 | 127-3179 | 2 | Bolt |
| 48 | 125-7229 | 1 | Nut |
| 49 | 125-7229 | 3 | Nut |
| 50 | 125-7230 | 1 | Nut |
| 51 | 125-7230 | 4 | Nut |

# Camshaft and Driving Gear Assembly

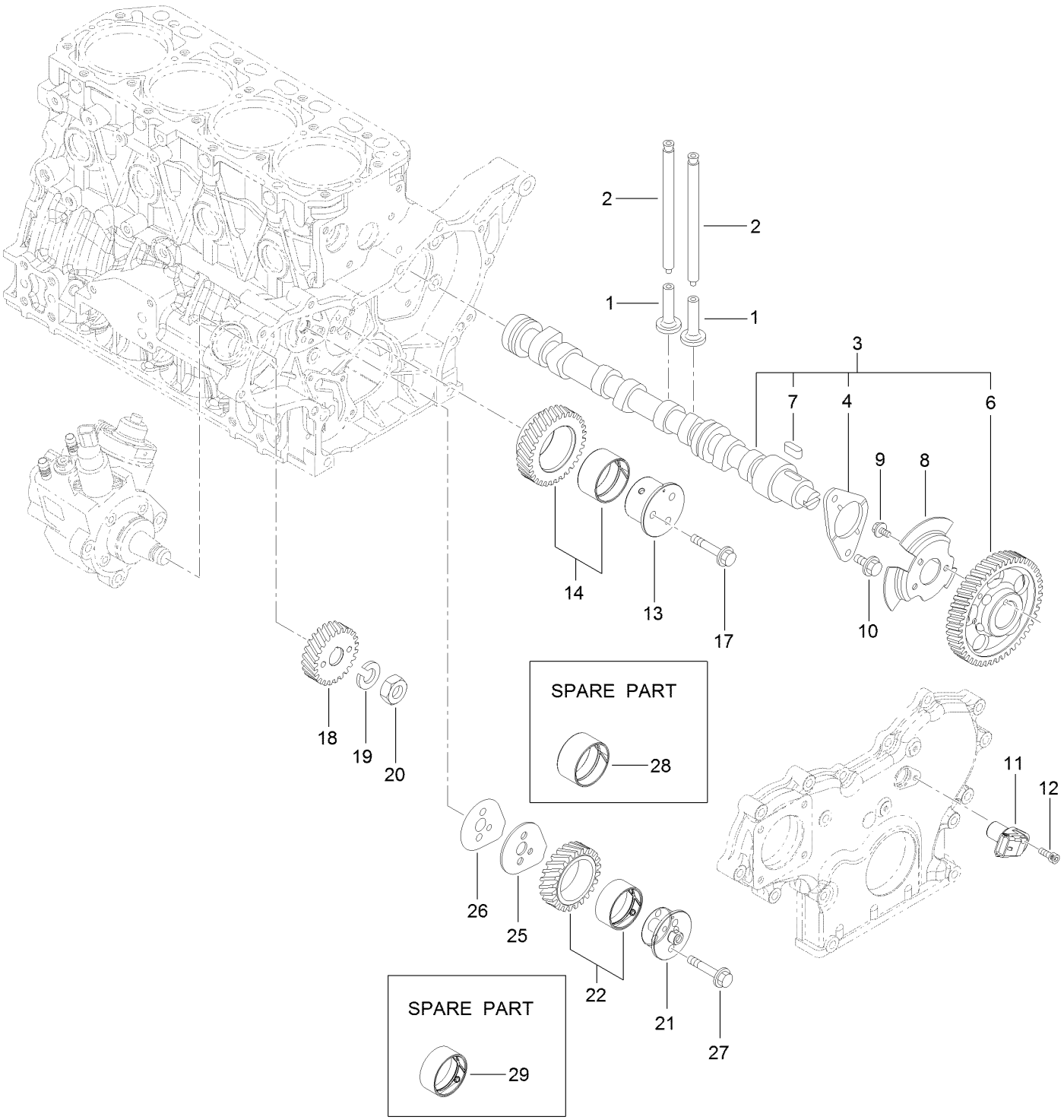

# Camshaft and Driving Gear Assembly (continued)

| Ref. | Part Number | Qty. | Description |
|---|---|---|---|
| 1 | 125-7016 | 8 | Tappet |
| 2 | 125-7017 | 8 | Rod-Push |
| 3 | 127-3113 | 1 | Camshaft ASM |
| 4 | 125-7008 | 1 | Metal-Thrust |
| 6 | 127-3052 | 1 | Gear-Camshaft |
| 7 | 125-7185 | 1 | Key |
| 8 | 127-3053 | 1 | Pulser-Camshaft |
| 9 | 125-7205 | 3 | Bolt |
| 10 | 125-7213 | 2 | Bolt |
| 11 | 127-3054 | 1 | Sensor-Rev, Gear |
| 12 | 127-3184 | 1 | Bolt |
| 13 | 127-3063 | 1 | Shaft-Idle, Gear A |
| 14 | 127-3066 | 1 | Idle Gear A ASM |
| 17 | 125-7219 | 3 | Bolt |
| 18 | 127-3070 | 1 | Gear-Pump, Supply |
| 19 | 127-3167 | 1 | Washer-Spring |
| 20 | 127-3185 | 1 | Nut-Lock |
| 21 | 127-3064 | 1 | Shaft-Idle, Gear B |
| 22 | 127-3067 | 1 | Idle Gear B ASM |
| 25 | 127-3068 | 1 | Plate-Idle, Shaft |
| 26 | 127-3069 | 1 | Gasket-Idle, Shaft B |
| 27 | 125-7218 | 2 | Bolt |
| 28 | 125-6927 | 1 | Bushing |
| 29 | 127-3065 | 1 | Bushing |

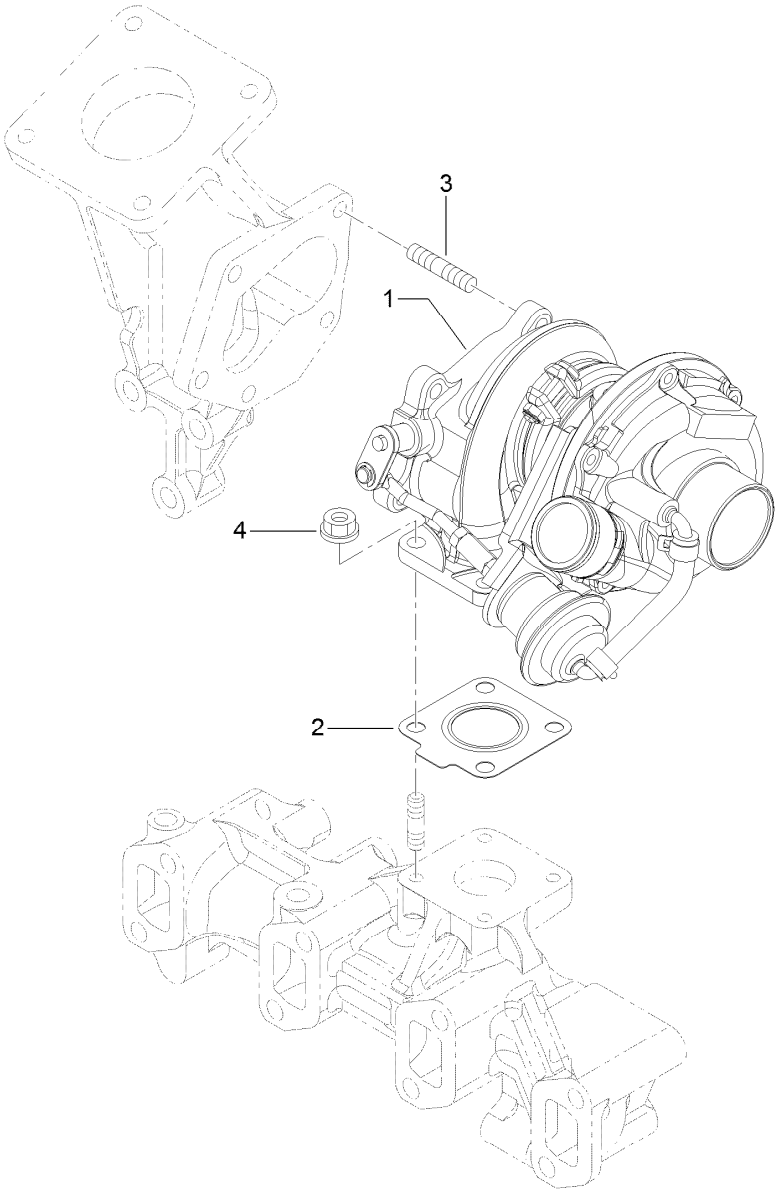


# Turbine Assembly

| Ref. | Part Number | Qty. | Description |
|---|---|---|---|
| 1 | 127-3151 | 1 | Turbine ASM |
| 2 | 125-7070 | 1 | Gasket |
| 3 | 125-6906 | 5 | Stud |
| 4 | 125-7229 | 4 | Nut |

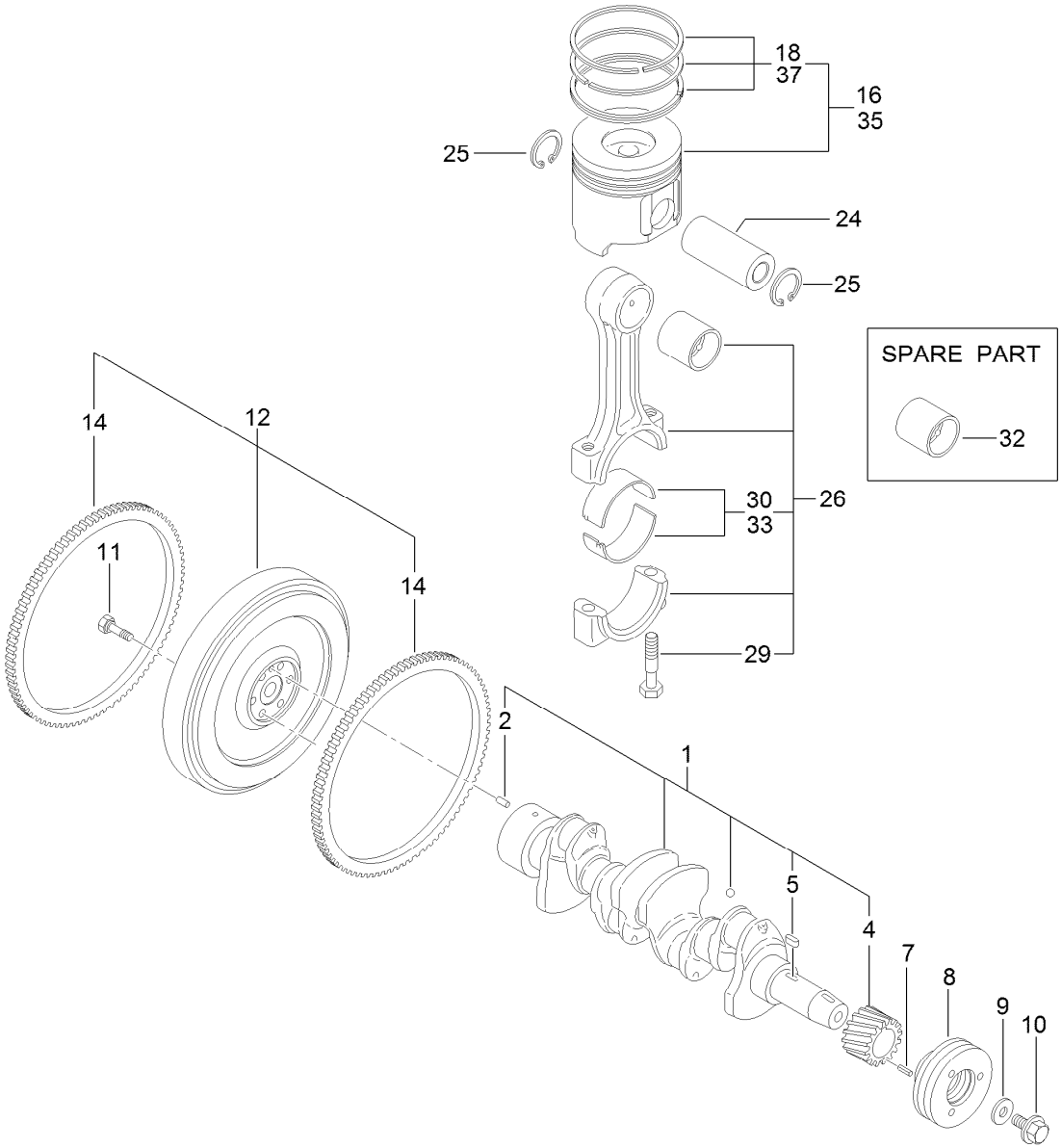


# Crankshaft and Piston Assembly

| Ref. | Part Number | Qty. | Description |
|---|---|---|---|
| 1 | 125-7091 | 1 | Crankshaft ASM |
| 2 | 125-6995 | 1 | Pin |
| 4 | 125-6937 | 1 | Gear |
| 5 | 125-7185 | 1 | Key |
| 7 | 125-7182 | 1 | Pin-Spring |
| 8 | 125-6925 | 1 | V-Pulley |
| 9 | 125-7109 | 1 | Washer |
| 10 | 125-6956 | 1 | Bolt |
| 11 | 125-6951 | 6 | Bolt |
| 12 | 127-3160 | 1 | Flywheel ASM |
| 14 | 125-6943 | 1 | Gear |

| Ref. | Part Number | Qty. | Description |
|---|---|---|---|
| 16 | 127-3097 | 4 | Piston ASM |
| 18 | 127-3098 | 4 | Piston Ring ASM |
| 24 | 125-7030 | 4 | Pin |
| 25 | 125-7180 | 8 | Ring |
| 26 | 125-7242 | 4 | Connecting Rod ASM |
| 29 | 125-6955 | 8 | Bolt |
| 30 | 125-7018 | 4 | Pin-Crank |
| 32 | 125-6997 | 4 | Pin-Piston |
| 33 | 125-7019 | 4 | Pin-Crank (.25) |
| 35 | 127-3099 | 4 | Piston ASM (0.25 O.S.) |
| 37 | 127-3100 | 4 | Piston Ring ASM (0.25 O.S.) |

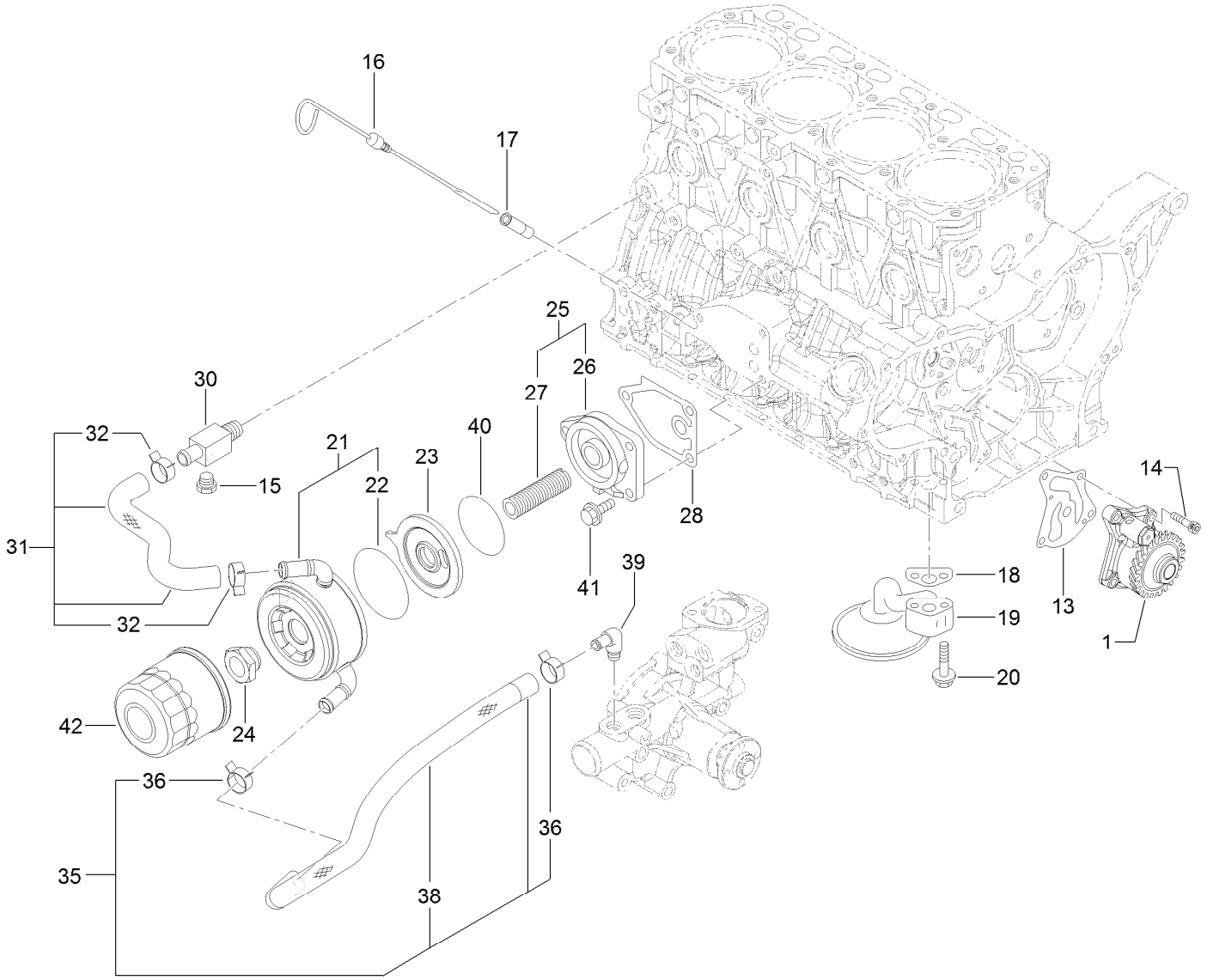


# Lubrication and Oil System Assembly

| Ref. | Part Number | Qty. | Description |
|---|---|---|---|
| 1 | 127-3101 | 1 | Oil Lube Pump ASM |
| 13 | 127-3004 | 1 | Gasket |
| 14 | 125-7232 | 4 | Bolt |
| 15 | 125-7171 | 1 | Plug-Drain |
| 16 | 125-6987 | 1 | Dipstick |
| 17 | 125-6954 | 1 | Guide-Dipstick |
| 18 | 125-7022 | 1 | Gasket |
| 19 | 125-7023 | 1 | Pipe ASM |
| 20 | 125-7217 | 2 | Bolt |
| 21 | 127-3014 | 1 | Cooler ASM |
| 22 | 127-2985 | 1 | O-Ring |
| 23 | 127-3015 | 1 | Bracket-Cooler |
| 24 | 125-7041 | 1 | Nut-Cooler, Oil |
| 25 | 127-3009 | 1 | Bracket ASM |

| Ref. | Part Number | Qty. | Description |
|---|---|---|---|
| 26 | 125-6930 | 1 | Bracket |
| 27 | 127-3010 | 1 | Stud |
| 28 | 125-7024 | 1 | Gasket |
| 30 | 125-6990 | 1 | Joint |
| 31 | 127-3102 | 1 | Pipe-Cooling, Water |
| 32 | 125-7162 | 2 | Clip |
| 35 | 127-3103 | 1 | Hose-Cooling, Water |
| 36 | 125-7162 | 2 | Clip |
| 38 | 127-3007 | 1 | Tube |
| 39 | 125-7001 | 1 | Elbow |
| 40 | 127-3176 | 1 | O-Ring |
| 41 | 125-7595 | 3 | Bolt |
| 42 | 125-7025 | 1 | Filter-Engine |

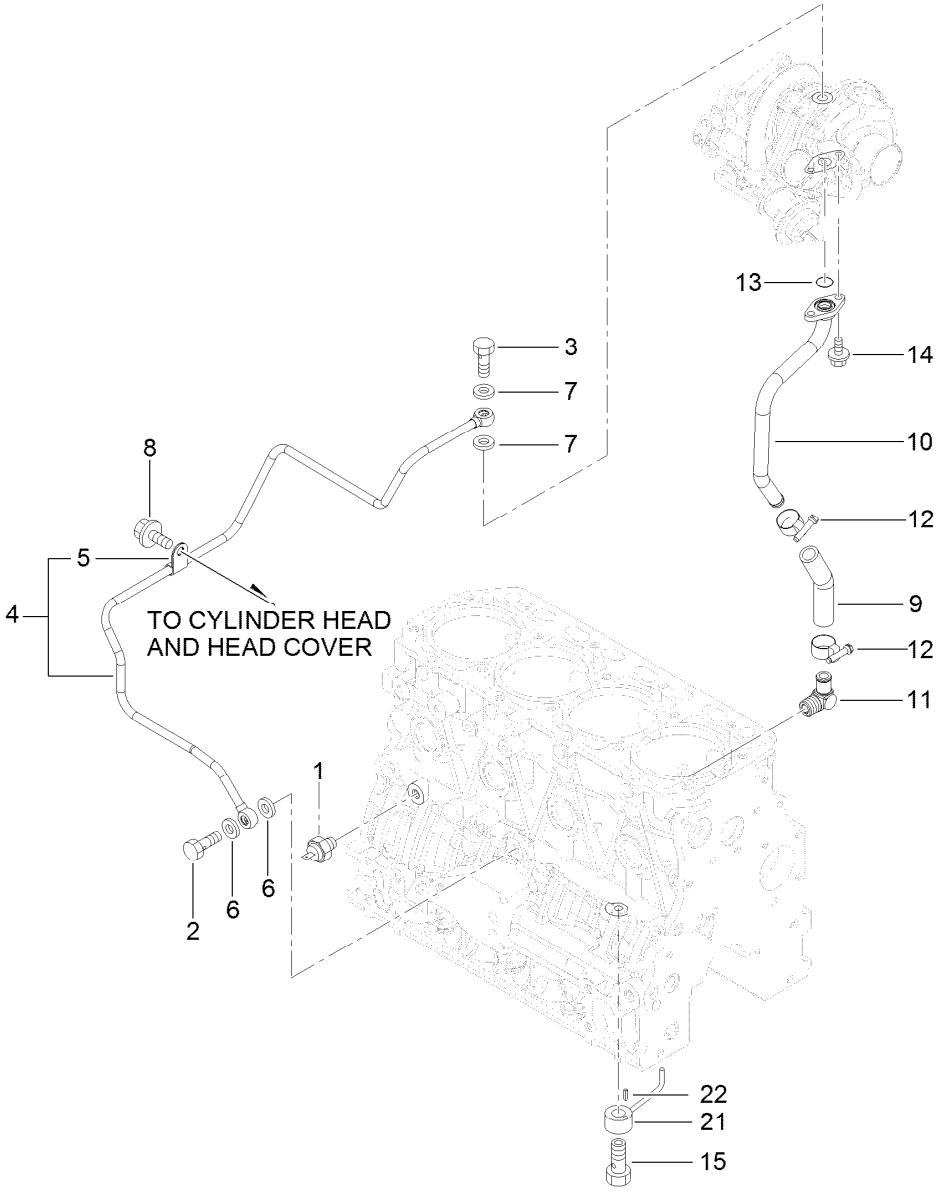


# Lubrication Oil Line Assembly

| Ref. | Part Number | Qty. | Description |
|---|---|---|---|
| 1 | 125-6918 | 1 | Switch-Oil |
| 2 | 125-6975 | 1 | Bolt-Joint, Pipe |
| 3 | 125-6952 | 1 | Bolt-Joint, Pipe |
| 4 | 127-3154 | 1 | Lube Oil Pipe ASM |
| 5 | 125-6976 | 1 | Retainer |
| 6 | 125-7175 | 2 | Washer-Seal |
| 7 | 125-7193 | 2 | Gasket |
| 8 | 93-0362 | 1 | Bolt |
| 9 | 127-2992 | 1 | Joint |

| Ref. | Part Number | Qty. | Description |
|---|---|---|---|
| 10 | 127-3155 | 1 | Pipe-Lube, Oil |
| 11 | 127-3003 | 1 | Elbow |
| 12 | 127-3169 | 2 | Clamp-Hose |
| 13 | 125-7198 | 1 | O-Ring |
| 14 | 125-7208 | 2 | Bolt |
| 15 | 125-7105 | 4 | Check Valve ASM |
| 21 | 125-7098 | 4 | Nozzle |
| 22 | 125-7182 | 4 | Pin-Spring |

# Fuel System Assembly

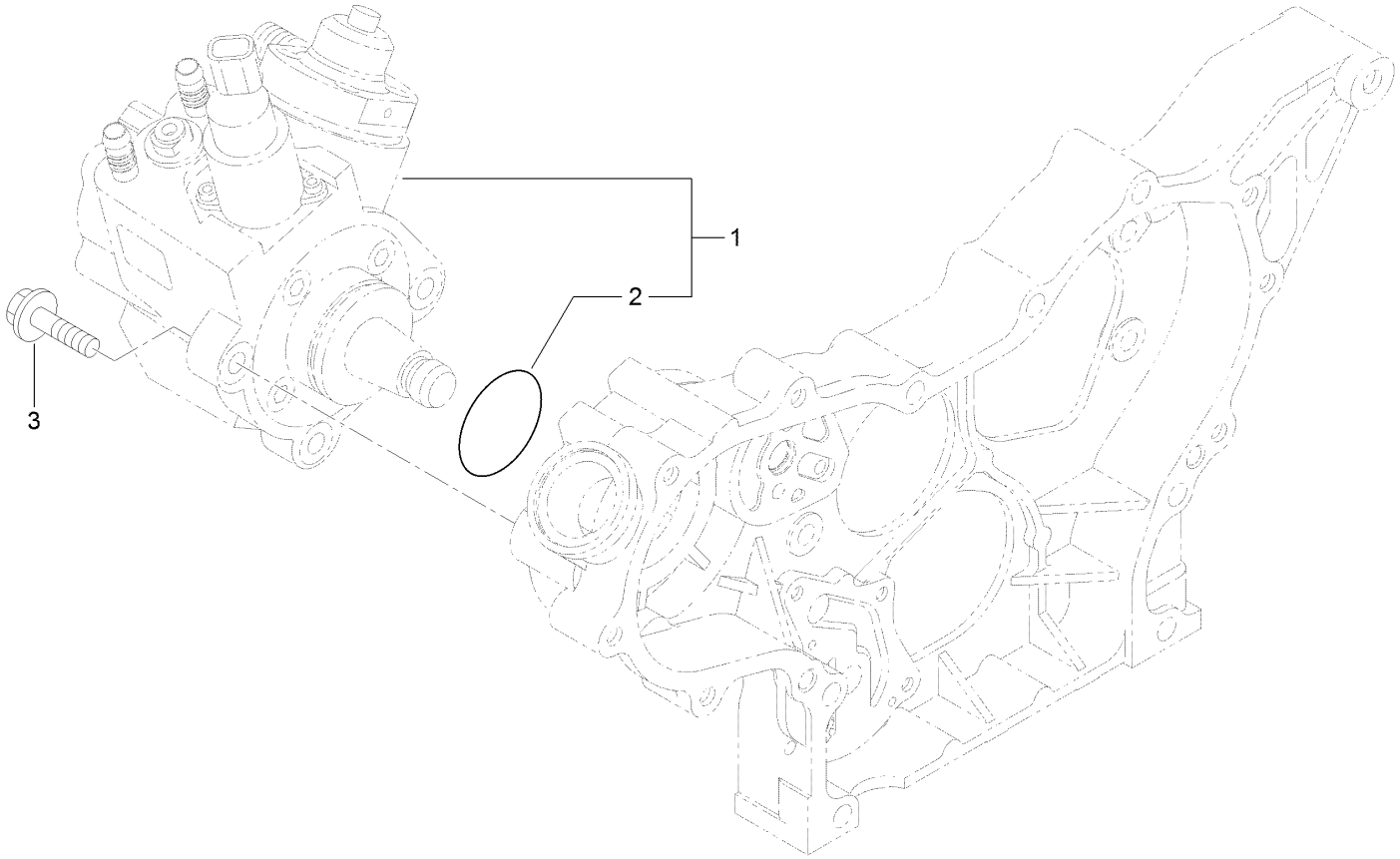

# Fuel System Assembly (continued)

| Ref. | Part Number | Qty. | Description |
|---|---|---|---|
| 1 | 127-3073 | 1 | Fuel Pump ASM |
| 2 | 127-3074 | 1 | O-Ring |
| 3 | 125-7216 | 3 | Bolt |

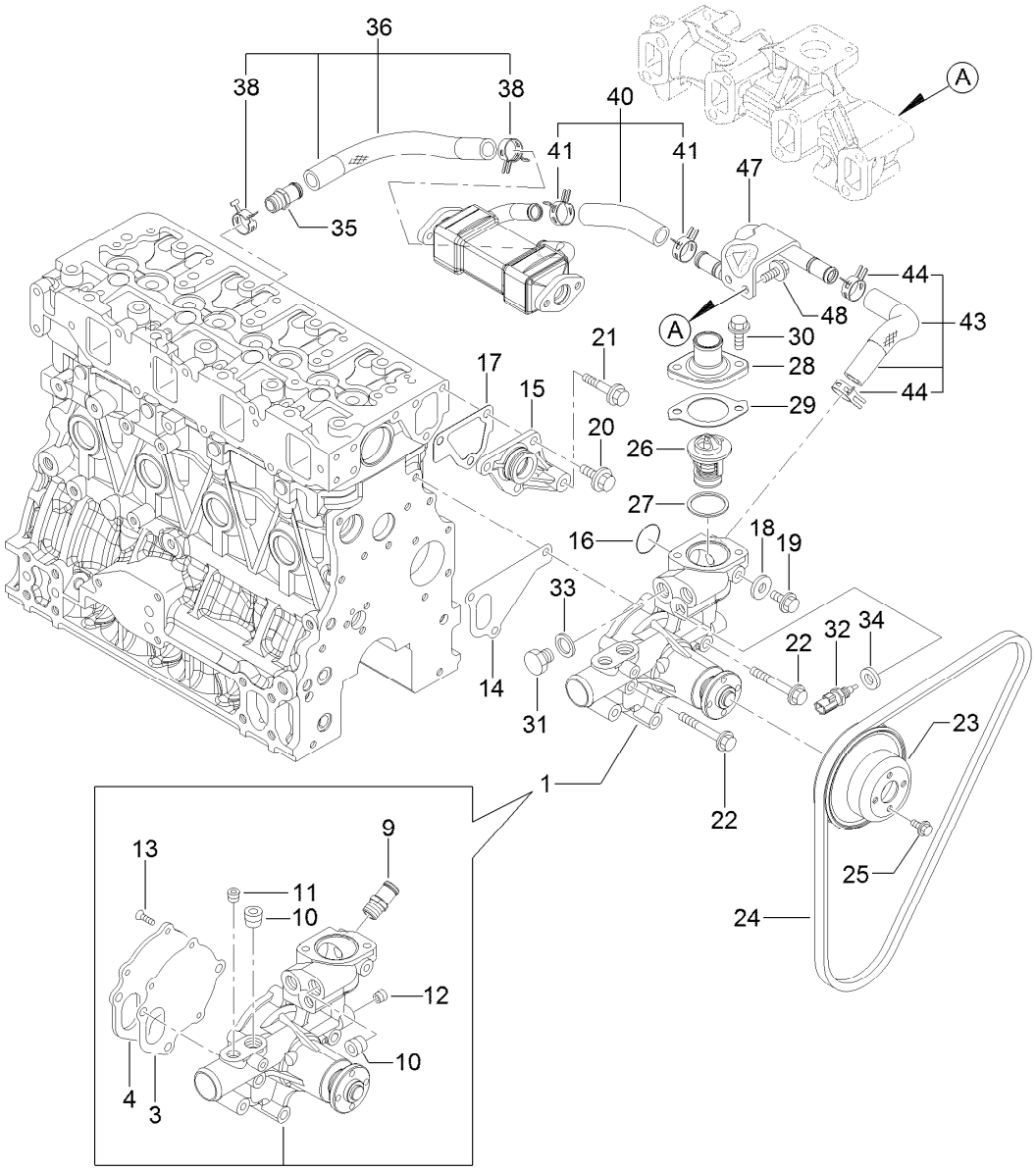


# Cooling Water System Assembly

| Ref. | Part Number | Qty. | Description |
|---|---|---|---|
| 1 | 127-3071 | 1 | Water Pump ASM |
| 3 | 125-6998 | 1 | Gasket |
| 4 | 125-6999 | 1 | Plate |
| 9 | 127-3017 | 1 | Joint |
| 10 | 125-7123 | 2 | Plug |
| 11 | 127-3175 | 1 | Plug |
| 12 | 125-7195 | 1 | Plug |
| 13 | 125-7234 | 3 | Screw |
| 14 | 125-7047 | 1 | Gasket |
| 15 | 125-6986 | 1 | Joint |
| 16 | 125-7048 | 1 | O-Ring |
| 17 | 125-6978 | 1 | Gasket |
| 18 | 125-7192 | 1 | Gasket |
| 19 | 93-0362 | 1 | Bolt |
| 20 | 125-7214 | 3 | Bolt |
| 21 | 125-7219 | 1 | Bolt |
| 22 | 125-7222 | 3 | Bolt |
| 23 | 125-7039 | 1 | V-Pulley |
| 24 | 127-2998 | 1 | V-Belt |

| Ref. | Part Number | Qty. | Description |
|---|---|---|---|
| 25 | 125-7206 | 4 | Bolt |
| 26 | 125-7029 | 1 | Thermostat |
| 27 | 125-7026 | 1 | Gasket |
| 28 | 125-7034 | 1 | Cover |
| 29 | 125-7110 | 1 | Gasket |
| 30 | 125-7594 | 2 | Bolt |
| 31 | 125-6953 | 1 | Plug |
| 32 | 125-7124 | 1 | Sensor-Thermostat, CW |
| 33 | 125-6979 | 1 | Gasket |
| 34 | 125-7176 | 1 | Washer-Seal |
| 35 | 127-3017 | 1 | Joint |
| 36 | 127-3072 | 1 | Water In Pipe ASM |
| 38 | 127-3020 | 2 | Clip-Hose |
| 40 | 127-3115 | 1 | Water Out Pipe ASM |
| 41 | 127-3020 | 2 | Clip-Hose |
| 43 | 127-3116 | 1 | Water Out Pipe ASM |
| 44 | 127-3020 | 2 | Clip-Hose |
| 47 | 127-3117 | 1 | Pipe-Out, CW |
| 48 | 125-7214 | 2 | Bolt |

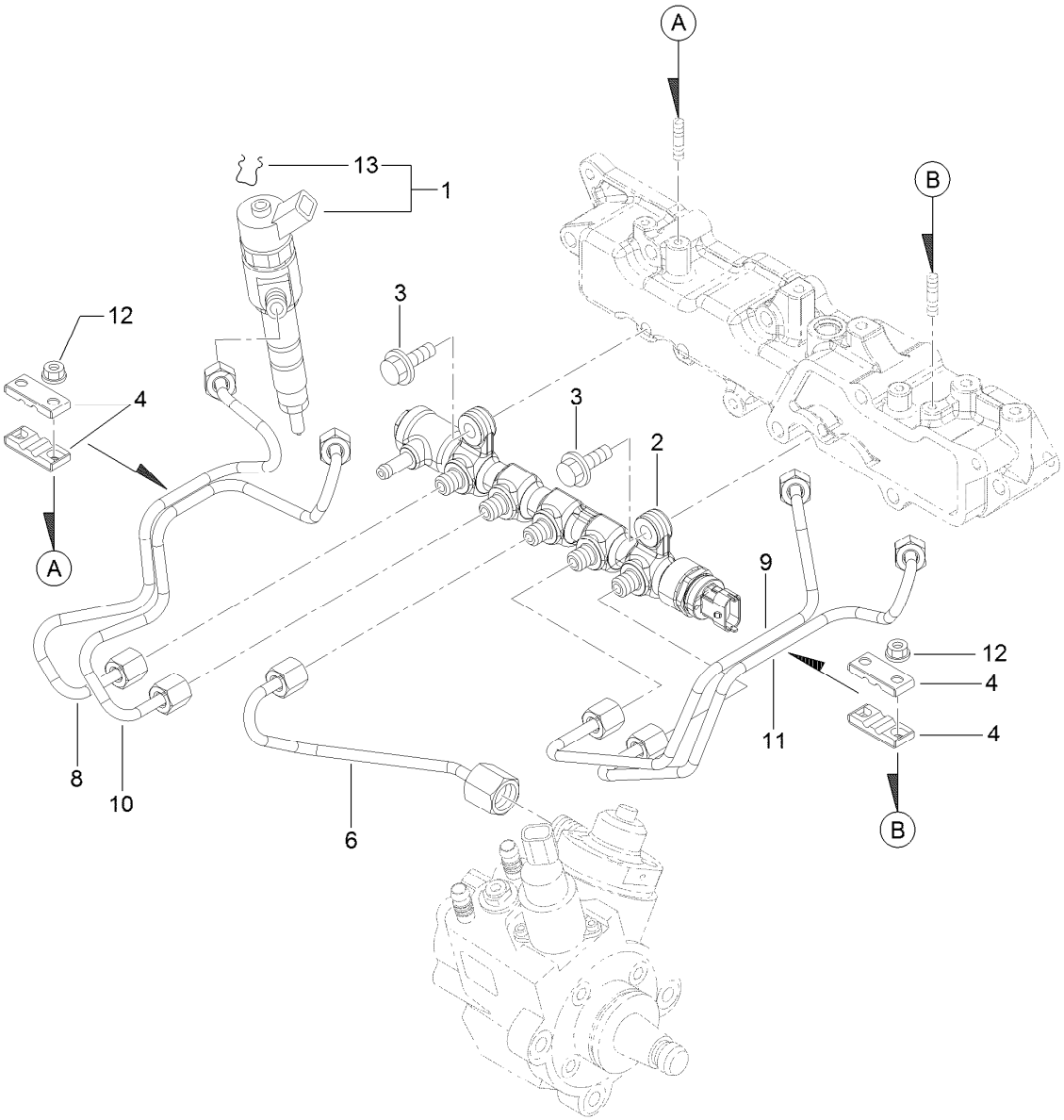


# Fuel Injection Valve Assembly

| *Ref.* | *Part Number* | *Qty.* | *Description* |
|---|---|---|---|
| 1 | 127-3104 | 4 | Injector ASM |
| 2 | 127-3118 | 1 | Rail ASM |
| 3 | 125-7215 | 2 | Bolt |
| 4 | 127-2982 | 4 | Retainer |
| 6 | 127-3082 | 1 | Rail In Pipe ASM |
| 8 | 127-3121 | 1 | Injection Pipe ASM |
| 9 | 127-3083 | 1 | Injection Pipe ASM |
| 10 | 127-3122 | 1 | Injection Pipe ASM |
| 11 | 127-3084 | 1 | Injection Pipe ASM |
| 12 | 125-7231 | 4 | Nut |
| 13 | 130-7430 | 4 | Ring-Retaining |

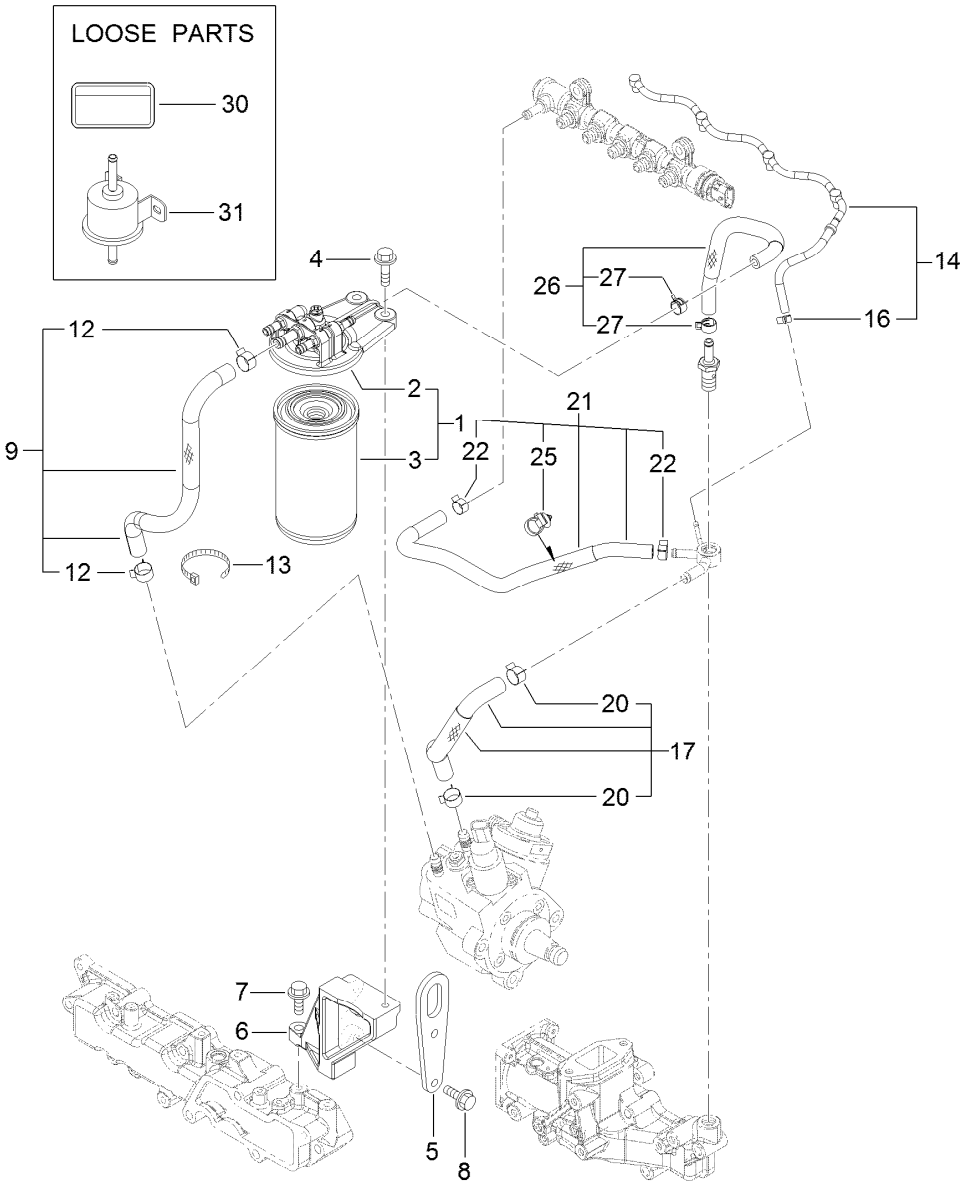


# Fuel Line Assembly

| Ref. | Part Number | Qty. | Description |
|---|---|---|---|
| 1 | 127-3075 | 1 | Fuel/Oil Filter ASM |
| 2 | 127-3076 | 1 | Fuel/Oil Filter Bracket ASM |
| 3 | 125-8752 | 1 | Filter-Fuel/Oil |
| 4 | 125-7216 | 2 | Bolt |
| 5 | 127-3091 | 1 | Lifter-Engine |
| 6 | 127-3105 | 1 | Stay-Bracket, Filter |
| 7 | 125-7215 | 1 | Bolt |
| 8 | 125-7216 | 2 | Bolt |
| 9 | 127-3077 | 1 | Fuel Pipe ASM |
| 12 | 125-7191 | 2 | Clamp-Hose |
| 13 | 127-2981 | 1 | Band |

| Ref. | Part Number | Qty. | Description |
|---|---|---|---|
| 14 | 127-3120 | 1 | Fuel Pipe ASM |
| 16 | 127-3172 | 1 | Clamp-Hose |
| 17 | 127-3078 | 1 | Fuel Pipe ASM |
| 20 | 125-7191 | 2 | Clamp-Hose |
| 21 | 127-3119 | 1 | Fuel Pipe ASM |
| 22 | 127-2950 | 2 | Clip-Hose |
| 25 | 127-3087 | 1 | Band-Clip |
| 26 | 127-3079 | 1 | Fuel Pipe ASM |
| 27 | 127-2950 | 2 | Clip-Hose |
| 30 | 125-6900 | 1 | Label-Caution, Fuel Oil |
| 31 | 127-3008 | 1 | Fuel Feed Pump ASM |

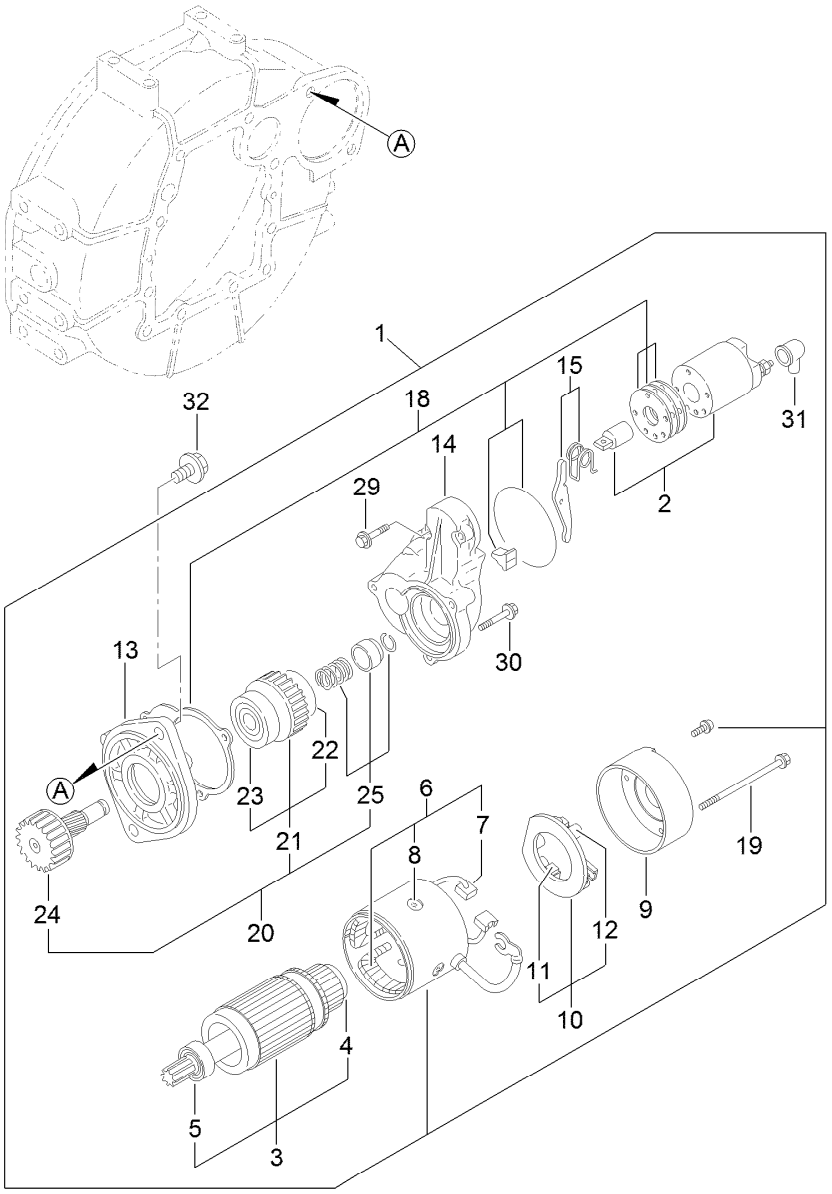


# Starting Motor Assembly

| Ref. | Part Number | Qty. | Description |
|---|---|---|---|
| 1 | 125-7003 | 1 | Starter |
| 2 | 125-7004 | 1 | Switch ASM |
| 3 | 125-7112 | 1 | Armature ASM |
| 4 | 125-7252 | 1 | Bearing-Ball |
| 5 | 125-7249 | 1 | Bearing, Ball |
| 6 | 125-7113 | 1 | Field Coil ASM |
| 7 | 125-7114 | 2 | Brush |
| 8 | 125-7163 | 4 | Screw |
| 9 | 125-7115 | 1 | Cover |
| 10 | 125-7116 | 1 | Brush Holder ASM |
| 11 | 125-7114 | 2 | Brush |
| 12 | 125-7036 | 4 | Spring |
| 13 | 125-7164 | 1 | Case-Gear |
| 14 | 125-7005 | 1 | Housing |

| Ref. | Part Number | Qty. | Description |
|---|---|---|---|
| 15 | 125-7165 | 1 | Lever Set |
| 18 | 125-7037 | 1 | Dust Cover ASM |
| 19 | 125-7117 | 2 | Bolt-Through |
| 20 | 125-7166 | 1 | Pinion ASM |
| 21 | 125-7250 | 1 | Clutch ASM |
| 22 | 125-7251 | 1 | Bearing-Ball |
| 23 | 125-7253 | 1 | Bearing-Ball |
| 24 | 125-7167 | 1 | Shaft |
| 25 | 125-7168 | 1 | Stopper Set |
| 29 | 125-7210 | 2 | Bolt |
| 30 | 125-7211 | 3 | Bolt |
| 31 | 125-7169 | 1 | Cover |
| 32 | 125-7225 | 2 | Bolt |

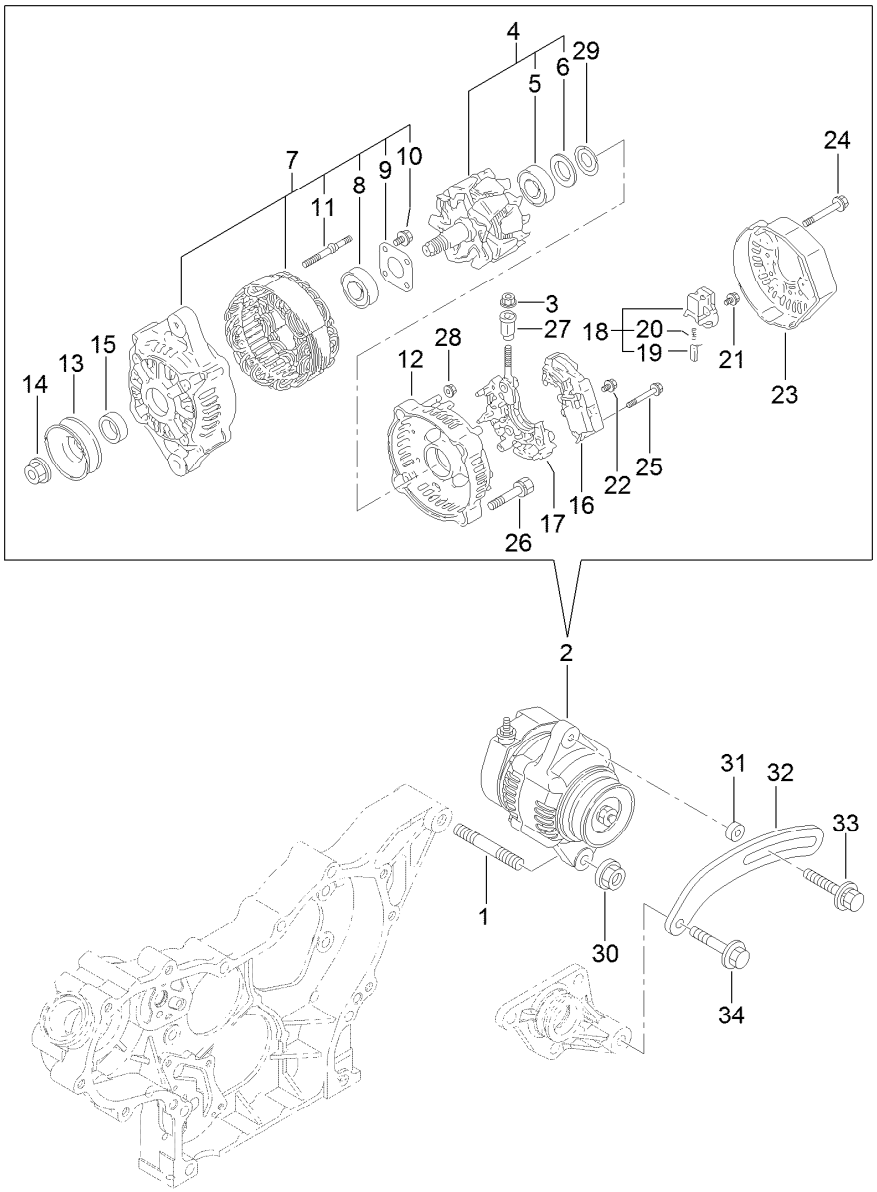


# Generator Assembly

| Ref. | Part Number | Qty. | Description |
|---|---|---|---|
| 1 | 127-3011 | 1 | Stud |
| 2 | 125-7120 | 1 | Alternator-12V |
| 3 | 127-3190 | 1 | Nut |
| 4 | 127-2951 | 1 | Rotor ASM |
| 5 | 127-2983 | 1 | Bearing-Ball |
| 6 | 127-2962 | 1 | Cover |
| 7 | 127-2952 | 1 | Frame ASM |
| 8 | 127-2958 | 1 | Bearing-Ball |
| 9 | 127-2959 | 1 | Plate-Retainer |
| 10 | 127-2960 | 4 | Screw |
| 11 | 127-2961 | 2 | Stud |
| 12 | 127-2953 | 1 | Frame ASM |
| 13 | 127-2954 | 1 | Pulley |
| 14 | 127-2955 | 1 | Nut |
| 15 | 127-2957 | 1 | Collar |
| 16 | 127-3002 | 1 | Regulator ASM |
| 17 | 127-2963 | 1 | Holder |

| Ref. | Part Number | Qty. | Description |
|---|---|---|---|
| 18 | 127-2993 | 1 | Holder |
| 19 | 127-2956 | 2 | Brush ASM |
| 20 | 127-2964 | 2 | Spring |
| 21 | 127-2965 | 6 | Screw |
| 22 | 127-2966 | 1 | Screw |
| 23 | 127-2999 | 1 | Cover |
| 24 | 127-2967 | 3 | Bolt |
| 25 | 127-2968 | 2 | Screw |
| 26 | 127-2969 | 2 | Bolt |
| 27 | 127-2970 | 1 | Bushing-Insulation |
| 28 | 127-2971 | 2 | Nut |
| 29 | 127-2972 | 1 | Washer |
| 30 | 125-7230 | 1 | Nut |
| 31 | 125-6947 | 1 | Spacer |
| 32 | 127-2977 | 1 | Adjuster |
| 33 | 125-7134 | 1 | Bolt |
| 34 | 125-7219 | 1 | Bolt |

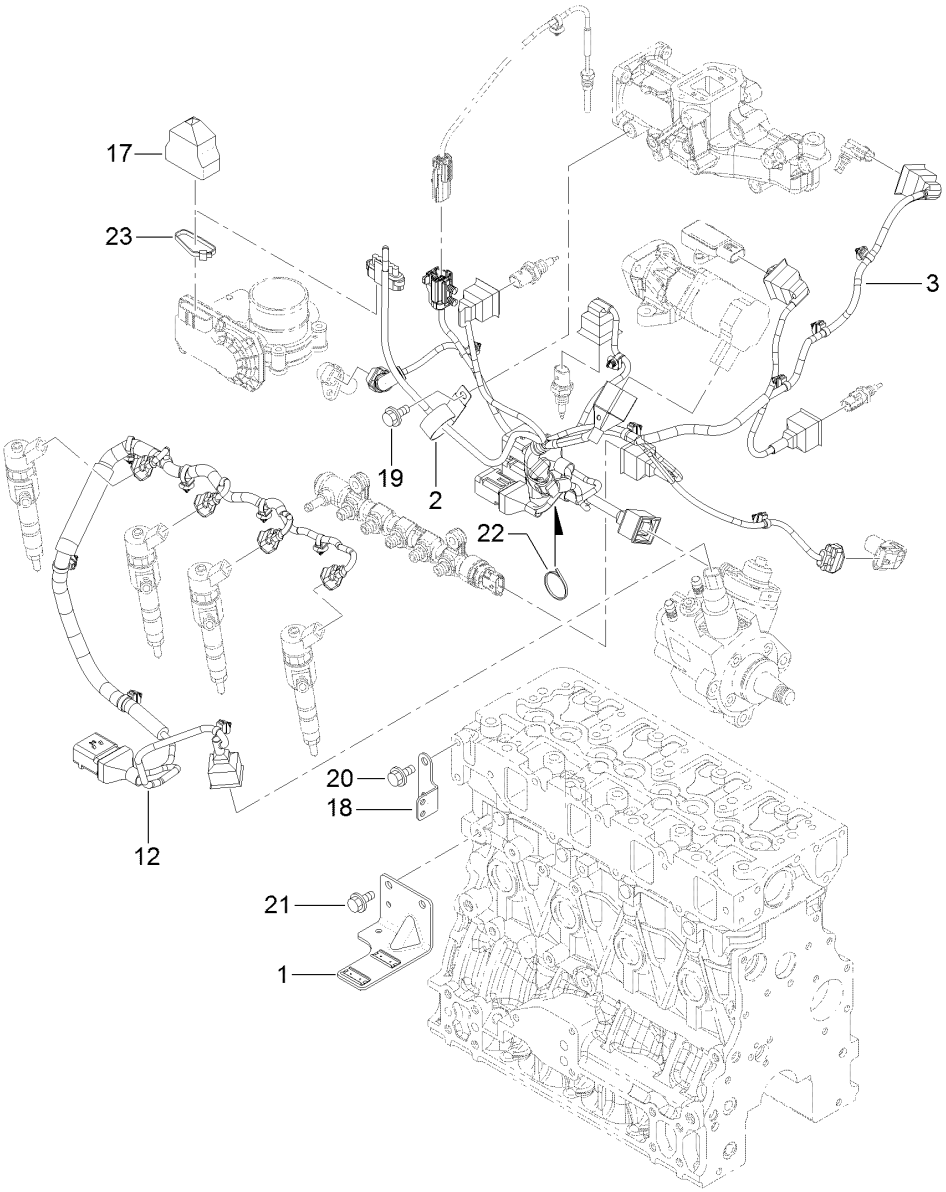


# Electric Parts Assembly

| *Ref.* | *Part Number* | *Qty.* | *Description* |
|---|---|---|---|
| 1 | 127-3086 | 1 | Bracket-Connector |
| 2 | 127-3018 | 1 | Clip |
| 3 | 127-3156 | 1 | Harness B-E C O, Engine |
| 12 | 127-3125 | 1 | Harness C |
| 17 | 127-3089 | 1 | Boot-Type, Cap |
| 18 | 127-3090 | 1 | Bracket-Harness |
| 19 | 93-0362 | 1 | Bolt |
| 20 | 93-0362 | 2 | Bolt |
| 21 | 93-0362 | 2 | Bolt |
| 22 | 127-3187 | 1 | Band |
| 23 | 127-3188 | 1 | Band |

# Gasket Set

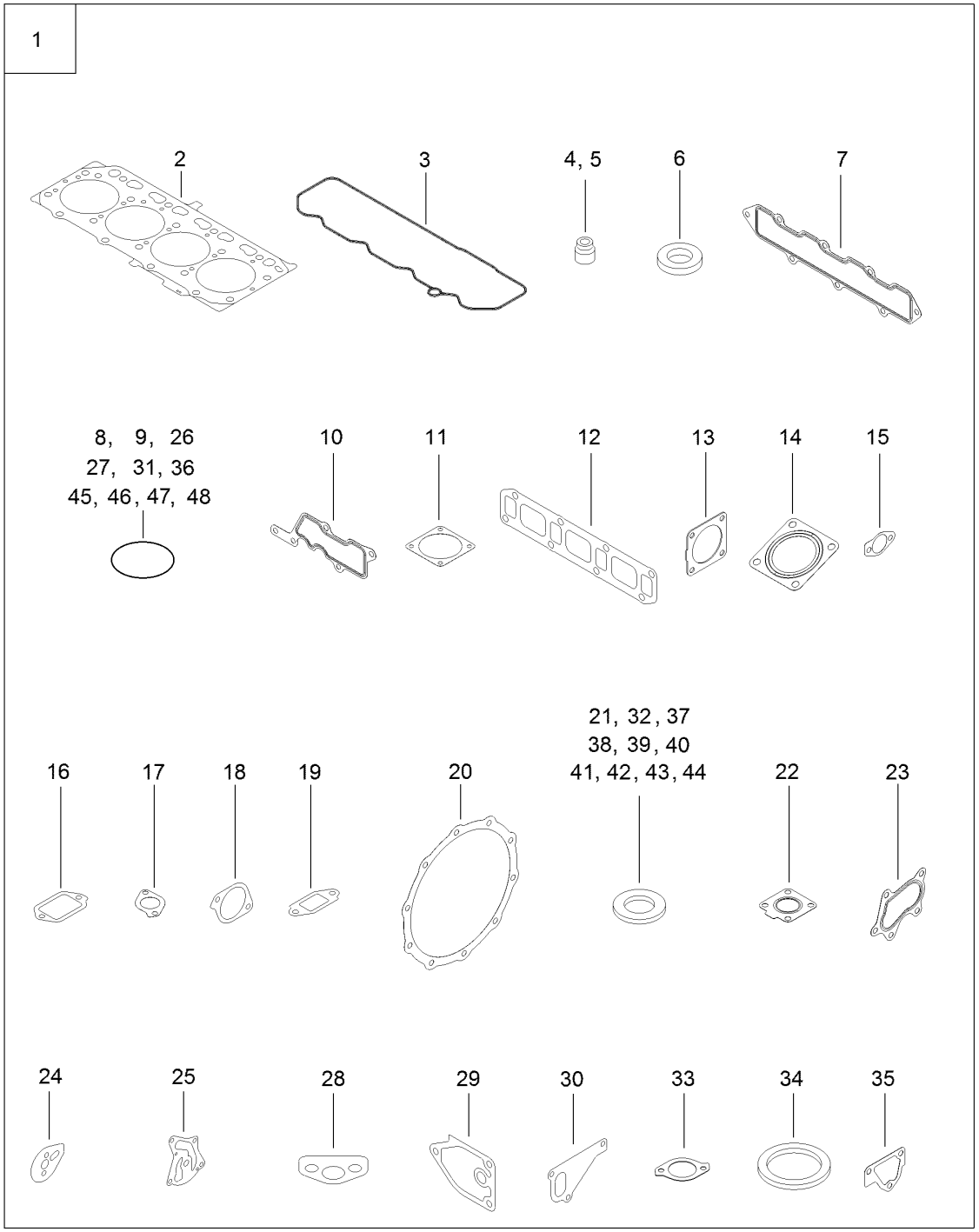
1
2
3
4, 5
6
7
8, 9, 26
27, 31, 36
45, 46, 47, 48
10
11
12
13
14
15
16
17
18
19
20
21, 32, 37
38, 39, 40
41, 42, 43, 44
22
23
24
25
28
29
30
33
34
35

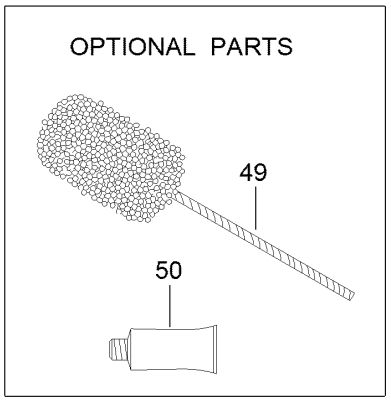
OPTIONAL PARTS
49
50

# Gasket Set (continued)

| Ref. | Part Number | Qty. | Description |
|---|---|---|---|
| 1 | 127-3189 | 1 | Gasket Kit |
| 2 | 127-3126 | 1 | Gasket-Head, Cylinder |
| 3 | 127-3106 | 1 | Gasket-Cover |
| 4 | 127-2986 | 4 | Seal-Stem, Valve |
| 5 | 127-3027 | 4 | Seal-Stem, Valve |
| 6 | 127-3021 | 4 | Gasket-Injector |
| 7 | 127-3107 | 1 | Gasket-Manifold, Intake |
| 8 | 127-3032 | 2 | O Ring-Sensor, Pressure |
| 9 | 127-3033 | 1 | O-Ring |
| 10 | 127-3034 | 1 | Gasket-Collector |
| 11 | 127-3037 | 2 | Gasket-Throttle |
| 12 | 127-3108 | 1 | Gasket-Manifold, Exhaust |
| 13 | 127-3019 | 1 | Gasket |
| 14 | 127-2987 | 1 | Gasket-Silencer |
| 15 | 127-3043 | 2 | Gasket-Cooler, E G R |
| 16 | 127-3046 | 1 | Gasket-E G R |
| 17 | 127-3016 | 1 | Gasket |
| 18 | 127-3050 | 1 | Gasket-Intake Valve, E G R |
| 19 | 127-3051 | 1 | Gasket-Out Valve, E G R |
| 20 | 127-3162 | 2 | Gasket-D P F |
| 21 | 127-3056 | 4 | Gasket-Sensor |
| 22 | 125-7070 | 1 | Gasket |
| 23 | 125-7071 | 1 | Gasket |
| 24 | 127-3069 | 1 | Gasket-Idle, Shaft B |
| 25 | 127-3004 | 1 | Gasket |
| 26 | 125-6909 | 2 | O-Ring |
| 27 | 127-2973 | 1 | O-Ring |
| 28 | 125-7022 | 1 | Gasket |
| 29 | 125-7024 | 1 | Gasket |
| 30 | 125-7047 | 1 | Gasket |
| 31 | 125-7048 | 1 | O-Ring |
| 32 | 125-6979 | 1 | Gasket |
| 33 | 125-7110 | 1 | Gasket |
| 34 | 125-7026 | 1 | Gasket |
| 35 | 125-6978 | 1 | Gasket |
| 36 | 127-3074 | 1 | O-Ring |
| 37 | 125-7174 | 1 | Washer-Seal |
| 38 | 125-7175 | 2 | Washer-Seal |
| 39 | 125-7176 | 1 | Washer-Seal |
| 40 | 127-3166 | 2 | Washer-Seal |
| 41 | 125-7177 | 1 | Washer-Seal |
| 42 | 125-7192 | 1 | Gasket |
| 43 | 125-7193 | 2 | Gasket |
| 44 | 127-3174 | 2 | Gasket |
| 45 | 93-0418 | 3 | O-Ring |
| 46 | 125-7197 | 1 | O-Ring |
| 47 | 125-7198 | 1 | O-Ring |
| 48 | 127-3176 | 1 | O-Ring |
| 49 | 127-3000 | 1 | Hone |
| 50 | 125-7248 | 1 | Gasket-Liquid |

# Attachments and Accessories

## For 30608 Groundsmaster 4100 Rotary Mower

| Product Name | Model/Part |
|---|---|
| Blade-Combination (19in) | 106-7166-03 |
| Blade-Atomic (19in) | 107-0215-03 |
| Atomic Blade Service Pack | 108-1451 |
| Blade-Flat Sail (19in) | 110-6116-03 |
| Flat Blade Service Pack (19in) | 110-6140 |
| Vinyl Backrest Extension Kit | 119-7718 |
| Large Seat Cover | 120-5179 |
| Castor Wrench | 121-3874 |
| Premium Engine Oil 10w30 (55 Gallon Drum) | 121-6392 |
| Premium Engine Oil 10w30 (5 Gallon Pail) | 121-6393 |
| Premium Engine Oil 15w40 (55 Gallon Drum) | 121-6394 |
| Premium Engine Oil 15w40 (5 Gallon Pail) | 121-6395 |
| MVP Blade Kit | 130-2660 |
| Pivot Caster Scraper Kit | 132-6114 |
| PX Hydraulic Fluid (5 Gal) | 133-8086 |
| PX Hydraulic Fluid (55 Gal) | 133-8087 |
| Skid Plate Kit | 136-4360 |
| Tire-High Traction (20x10-10) | 136-4440 |
| Tire-High Traction (26x12-12) | 136-4442 |
| 8in Semi-Pneumatic Wheel ASM | 137-5529 |
| Universal Sunshade | 30349 |
| 400 Hour MVP Kit | 30408 |
| North American Light Kit | 30414 |
| Leaf Mulcher Kit | 30419 |
| Replacement Cutting Unit | 30451 |
| CE Kit | 30453 |
| Beacon Kit | 30661 |
| Slow-Moving Vehicle Sign Kit | 30665 |
| Light Adapter Kit | 30691 |
| Horn Kit | 31511 |
| Backup Alarm Kit | 31512 |
| Flow Divider Kit, Serial Number 400000000 and After Groundsmaster 4100 Series Traction Unit | 31526 |
| 1000 Hour Mvp Kit-Tier IV | 44967 |
| 8in Foam Filled Wheel ASM | 93-5974 |

**Notes:**

TORO®

Count on it.