Form No. 3324-692

266HE

Wheel Horse® Lawn and Garden Tractor

Model No. 72072—210000001 & Up

Operator's Manual

English (GB)

Contents

	Page
Safety	3
Safe Operation Practices for Ride-on (riding) Rotary Lawnmower Machines	3
Safe Operating Practices	3
Toro Riding Mower Safety	5
Sound Pressure Level	5
Sound Power Level	5
Vibration Level	5
Slope Chart	7
Symbols Glossary	9
Symbols Glossary	10
Symbols Glossary	11
Gasoline and Oil	12
Recommended Gasoline	12
Stabilizer/Conditioner	12
Filling the Fuel Tank	12
Check Engine Oil Level	12
Operation	13
Think Safety First	13
Controls	13
Parking Brake	13
Starting and Stopping the Engine	13
Operating the Power Take Off (PTO)	14
The Safety Interlock System	14
Indicator Control Module	16
Driving Forward or Backward	16
Stopping the Machine	17
Attachment Lift Lever	17
Adjusting Dial-A-Height	17
Positioning the Seat	17
Headlights	18
Positioning the Tilt Steering Wheel	18
Pushing the Machine by Hand	18
Maintenance	19
Recommended Maintenance Schedule	19
Air Cleaner	20
Engine Oil	21
Spark Plug	22
Greasing and Lubrication	23
Tire Pressure	24
Brake	24
Fuel Tank	25
Fuel Filter	25
Front Wheel Toe-In	26
Transaxle Fluid	26
Fuse	26
Headlights	27
Battery	27
Wiring Diagram	31
Cleaning and Storage	32
Troubleshooting	33

Warning

The engine exhaust from this product contains chemicals known to the State of California to cause cancer, birth defects, or other reproductive harm.

Important The engine in this product is not equipped with a spark arrester muffler. It is a violation of California Public Resource Code Section 4442 to use or operate this engine on any forest-covered, brush-covered, or grass-covered land as defined in CPRC 4126. Other states or federal areas may have similar laws.

The enclosed Engine Owner's Manual is supplied for information regarding The U.S. Environmental Protection Agency (PEA) and the California Emission Control Regulation of emission systems, maintenance and warranty.

Keep this engine Owner's Manual with your unit. Should this engine Owner's Manual become damaged or illegible, replace immediately. Replacements may be ordered through the engine manufacturer.

This spark ignition system complies with Canadian ICES-002.

Ce système d'allumage par étincelle de véhicule est conforme à la norme NMB-002 du Canada.

Introduction

Thank you for purchasing a Toro product.

All of us at Toro want you to be completely satisfied with your new product, so feel free to contact your local Authorized Service Dealer for help with service, genuine replacement parts, or other information you may require.

Whenever you contact your Authorized Service Dealer or the factory, always know the model and serial numbers of your product. These numbers will help the Service Dealer or Service Representative provide exact information about your specific product. You will find the model and serial number plate at the location shown in Figure 1.

© 2000 by The Toro Company
8111 Lyndale Avenue South
Bloomington, MN 55420-1196

All Rights Reserved
Printed in the USA

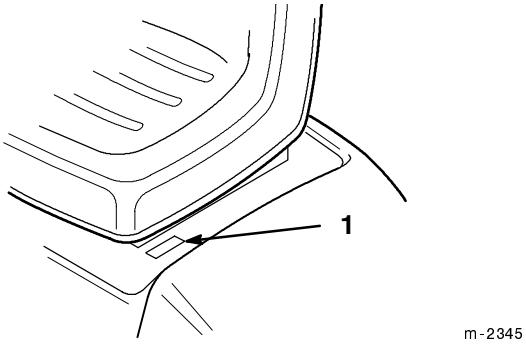

Figure 1

1. Model and serial number plate

For your convenience, write the product model and serial numbers in the space below.

Model No: _____

Serial No. _____

Read this manual carefully to learn how to operate and maintain your product correctly. Reading this manual will help you and others avoid personal injury and damage to the product. Although we design, produce and market safe, state-of-the-art products, you are responsible for using the product properly and safely. You are also responsible for training persons, who you allow to use the product, about safe operation.

The warning system in this manual identifies potential hazards and has special safety messages that help you and others avoid personal injury, even death. ***Danger***, ***Warning***, and ***Caution*** are signal words used to identify the level of hazard. However, regardless of the hazard, be extremely careful.

Danger signals an extreme hazard that will cause serious injury or death if the recommended precautions are not followed.

Warning signals a hazard that may cause serious injury or death if the recommended precautions are not followed.

Caution signals a hazard that may cause minor or moderate injury if the recommended precautions are not followed.

Two other words are also used to highlight information. *Important* calls attention to special mechanical information, and *Note* emphasizes general information worthy of special attention.

Determine the left and right side of the machine from the normal operating position.

Safety

Safe Operation Practices for Ride-on (riding) Rotary Lawnmower Machines

This machine meets or exceeds European Standards in effect at the time of production. However, improper use or maintenance by the operator or owner can result in injury. To reduce the potential for injury, comply with these safety instructions and always pay attention to the safety alert ⚠ symbol, which means CAUTION, WARNING, or DANGER—"personal safety instruction." Failure to comply with the instruction may result in personal injury or death.

Safe Operating Practices

The following instructions are from the CEN standard EN 836:1997.

This product is capable of amputating hands and feet and throwing objects. Always follow all safety instructions to avoid serious injury or death.

Training

- Read the instructions carefully. Be familiar with the controls and the proper use of the equipment.
- Never allow children or people unfamiliar with these instructions to use the lawnmower. Local regulations can restrict the age of the operator.
- Never mow while people, especially children, or pets are nearby.
- Keep in mind that the operator or user is responsible for accidents or hazards occurring to other people or their property.
- Do not carry passengers.
- All drivers should seek and obtain professional and practical instruction. Such instruction should emphasize:
  - the need for care and concentration when working with ride-on machines;
  - control of a ride-on machine sliding on a slope will not be regained by the application of the brake. The main reasons for loss of control are:
    - insufficient wheel grip;
    - being driven too fast;
    - inadequate braking;
    - the type of machine is unsuitable for its task;

- lack of awareness of the effect of ground conditions, especially slopes;
- incorrect hitching and load distribution.

Preparation

- While mowing, always wear substantial footwear and long trousers. Do not operate the equipment when barefoot or wearing open sandals.
- Thoroughly inspect the area where the equipment is to be used and remove all objects which may be thrown by the machine.
- WARNING – Fuel is highly flammable.
  - Store fuel in containers specifically designed for this purpose.
  - Refuel outdoors only and do not smoke while refuelling.
  - Add fuel before starting the engine. Never remove the cap of the fuel tank or add fuel while the engine is running or when the engine is hot.
  - If fuel is spilled, do not attempt to start the engine but move the machine away from the area of spillage and avoid creating any source of ignition until fuel vapors have dissipated.
  - Replace all fuel tanks and container caps securely.
- Replace faulty silencers.
- Before using, always visually inspect to see that the blades, blade bolts and cutter assembly are not worn or damaged. Replace worn or damaged blades and bolts in sets to preserve balance.
- On multi-bladed machines, take care as rotating one blade can cause other blades to rotate.

Operation

- Do not operate the engine in a confined space where dangerous carbon monoxide fumes can collect.
- Mow only in daylight or in good artificial light.
- Before attempting to start the engine, disengage all blade attachment clutches and shift into neutral.
- Do not use on slopes of more than
  - 5° when mowing on side hills;
  - 10° when mowing uphill;
  - 15° when mowing downhill.
- Remember there is no such thing as a “safe” slope. Travel on grass slopes requires particular care. To guard against overturning:
  - do not stop or start suddenly when going up or downhill;
  - engage clutch slowly, always keep machine in gear, especially when travelling downhill;
  - machine speeds should be kept low on slopes and during tight turns;
  - stay alert for humps and hollows and other hidden hazards;
  - never mow across the face of the slope, unless the lawnmower is designed for this purpose.
- Use care when pulling loads or using heavy equipment.
  - Use only approved drawbar hitch points.
  - Limit loads to those you can safely control.
  - Do not turn sharply. Use care when reversing.
  - Use counterweight(s) or wheel weights when suggested in the instruction handbook.
- Watch out for traffic when crossing or near roadways.
- Stop the blades rotating before crossing surfaces other than grass.
- When using any attachments, never direct discharge of material toward bystanders nor allow anyone near the machine while in operation.
- Never operate the machine with defective guards or without safety protective devices in place.
- Do not change the engine governor settings or overspeed the engine. Operating the engine at excessive speed can increase the hazard of personal injury.
- Before leaving the operator’s position:
  - disengage the power take-off and lower the attachments;
  - change into neutral and set the parking brake;
  - stop the engine and remove the key.
- Disengage drive to attachments, stop the engine, and disconnect the spark plug wire(s) or remove the ignition key
  - before clearing blockages or unclogging chute;
  - before checking, cleaning or working on the lawnmower;
  - after striking a foreign object. Inspect the lawnmower for damage and make repairs before restarting and operating the equipment;
  - if the machine starts to vibrate abnormally (check immediately).

- Disengage drive to attachments when transporting or not in use.
- Stop the engine and disengage drive to attachment
  - before refuelling;
  - before removing the grass catcher;
  - before making height adjustment unless adjustment can be made from the operator's position.
- Reduce the throttle setting during engine run-out and, if the engine is provided with a shut-off valve, turn the fuel off at the conclusion of mowing.

Maintenance and Storage

- Keep all nuts, bolts and screws tight to be sure the equipment is in safe working condition.
- Never store the equipment with fuel in the tank inside a building where fumes can reach an open flame or spark.
- Allow the engine to cool before storing in any enclosure.
- To reduce the fire hazard, keep the engine, silencer, battery compartment and fuel storage area free of grass, leaves, or excessive grease.
- Check the grass catcher frequently for wear or deterioration.
- Replace worn or damaged parts for safety.
- If the fuel tank has to be drained, this should be done outdoors.
- On multi-bladed machines, take care as rotating one blade can cause other blades to rotate.
- When machine is to be parked, stored or left unattended, lower the cutting means unless a positive mechanical lock is used.

Toro Riding Mower Safety

The following list contains safety information specific to Toro products or other safety information that you must know that is not included in the CEN standard.

- Use only Toro-approved attachments. Warranty may be voided if used with unapproved attachments.

Sound Pressure Level

This unit has an equivalent continuous A-weighted sound pressure at the operator ear of: 90 dB(A), based on measurements of identical machines per procedures outlined in Directive 84/538/EEC and amendments.

Sound Power Level

This unit has a sound power level of: 105 Lwa, based on measurements of identical machines per procedures outlined in Directive 84/538/EEC and amendments.

Vibration Level

This unit has a maximum hand-arm vibration level of 4.0 m/s^2 and whole body vibration level of 0.2 m/s^2, based on measurements of identical machines per EN 1033 and EN 1032.

Slope Chart

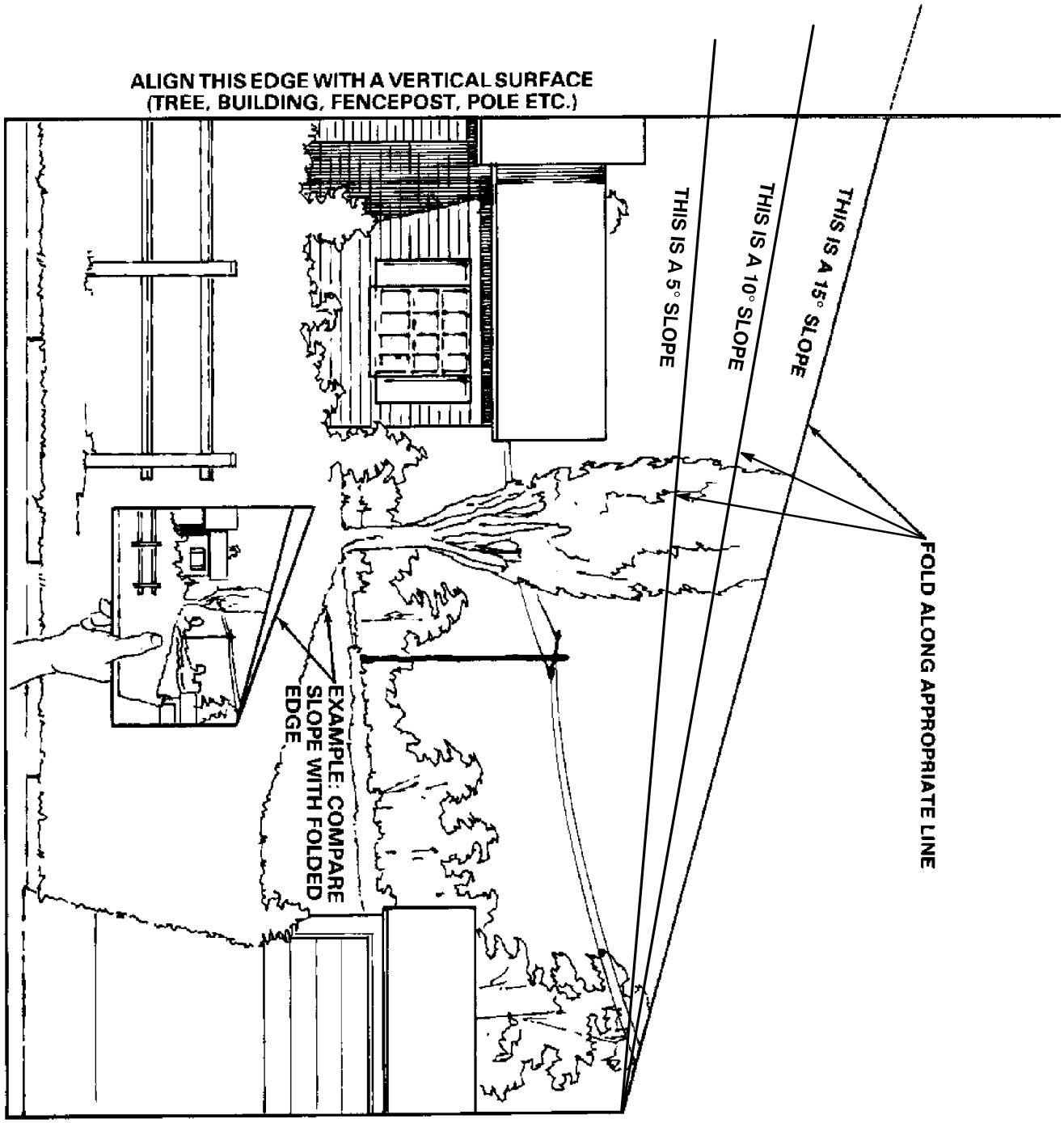
FOLD ALONG APPROPRIATE LINE
THIS IS A 15° SLOPE
THIS IS A 10° SLOPE
THIS IS A 5° SLOPE
ALIGN THIS EDGE WITH A VERTICAL SURFACE
(TREE, BUILDING, FENCEPOST, POLE ETC.)
EXAMPLE: COMPARE
SLOPE WITH FOLDED
EDGE

Symbols Glossary

Safety alert symbol

Safety alert symbol

Read operator's manual

Consult Technical Manual for proper service procedures

Thrown or flying objects- Whole body exposure

Thrown or flying objects- Rotary side-mounted mower. Keep deflector shield in place

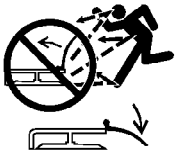

Severing toes or foot- mower blade

Severing fingers or hand- mower blade

Rotating blade can cut off toes or fingers. Stay clear of blade as long as engine is running

Do not open or remove safety shields while engine is running

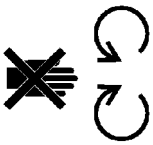

Dismemberment-Mower in rearward motion

Stay a safe distance from the machine

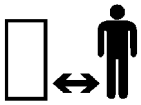

Stay a safe distance from the mower

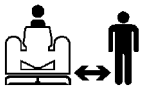

Keep children a safe distance from machine

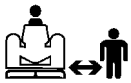

Machine rollover side hill

Machine rollover up hill

Machine rollover down hill

Machine rollover

Operating in reverse not allowed unless deactivated by Key Choice switch

Symbols Glossary

Cutting element-basic symbol

Cutting element-height adjustment

Cutting unit-lower

Cutting unit-raised

Cutting or entanglement of foot-Rotating auger

Severing of fingers or hand-impeller blade

Keep a safe distance from snowthrower

Stay a safe distance from the snowthrower

Tractors must be equipped with 45kg rear wheel weight with this attachment installed

Machine rollover ROPS snowthrower

Severing of hand-Rotating knives

Severing of foot-Rotating knives

Riding on this machine is allowed only on a passenger seat & only if the driver's view is not hindered

Crushing of fingers or hands-Force applied from side

Kickback or upward motion-Stored energy

Shut off engine & remove key before performing maintenance or repair work

Machine travel direction-combined

Low L

High H

Reverse R

Neutral N

First gear 1

Second gear 2

Third gear up to maximum # of forward gears 3

Symbols Glossary

Fast

Slow

Decreasing/Increasing

On/Run

Off/Stop

Engine

Engine start

Engine stop

Choke

Engine temperature

Engine lubricating oil pressure

Engine lubricating oil level

Key Choice Switch

Fuel

Fuel level

Volume empty

Volume full

Battery charging condition

Head lights-
Main/high beam

Brake system

Parking brake

Clutch

PTO (Power Take Off)

Engage

Disengage

Unlock

Lock

Gasoline and Oil

Recommended Gasoline

Use UNLEADED Regular Gasoline suitable for automotive use (85 pump octane minimum). Leaded regular gasoline may be used if unleaded regular is not available.

Important Never use methanol, gasoline containing methanol, or gasohol containing more than 10% ethanol because the fuel system could be damaged. Do not mix oil with gasoline.

Danger

In certain conditions, gasoline is extremely flammable and highly explosive. A fire or explosion from gasoline can burn you and others and can damage property.

- **Fill the fuel tank outdoors, in an open area, when the engine is cold. Wipe up any gasoline that spills.**
- **Do not fill the fuel tank completely full. Add gasoline to the fuel tank until the level is 6 mm to 13 mm (1/4″ to 1/2″) below the bottom of the filler neck. This empty space in the tank allows gasoline to expand.**
- **Never smoke when handling gasoline, and stay away from an open flame or where gasoline fumes may be ignited by a spark.**
- **Store gasoline in an approved container and keep it out of the reach of children. Never buy more than a 30-day supply of gasoline.**
- **Always place gasoline containers on the ground away from your vehicle before filling.**
- **Do not fill gasoline containers inside a vehicle or on a truck or trailer bed because interior carpets or plastic truck bed liners may insulate the container and slow the loss of any static charge.**
- **When practical, remove gas-powered equipment from the truck or trailer and refuel the equipment with its wheels on the ground.**
- **If this is not possible, then refuel such equipment on a truck or trailer from a portable container, rather than from a gasoline dispenser nozzle.**
- **If a gasoline dispenser nozzle must be used, keep the nozzle in contact with the rim of the fuel tank or container opening at all times until fueling is complete.**

Stabilizer/Conditioner

Using a stabilizer/conditioner in the machine:

- Keeps gasoline fresh during storage of 90 days or less. For longer storage it is recommended that the fuel tank be drained.
- Cleans the engine while it runs
- Eliminates gum-like varnish buildup in the fuel system, which causes hard starting

Important Never use fuel additives containing methanol or ethanol.

Add the correct amount of gas stabilizer/conditioner to the gas.

Note: A fuel stabilizer/conditioner is most effective when mixed with fresh gasoline. To minimize the chance of varnish deposits in the fuel system, use fuel stabilizer at all times.

Filling the Fuel Tank

1. Shut the engine off and set the parking brake.
2. Clean around fuel tank cap and remove the cap. Add unleaded regular gasoline to fuel tank, until the level is 6 mm to 13 mm (1/4 to 1/2 inch) below the bottom of the filler neck. This space in the tank allows gasoline to expand. Do not fill the fuel tank completely full.
3. Install fuel tank cap securely. Wipe up any gasoline that may have spilled.

Check Engine Oil Level

Before you start the engine and use the machine, check the oil level in the engine crankcase; refer to Checking Oil Level, page 21.

Operation

Think Safety First

Please carefully read all the safety instructions on pages 3-11. Knowing this information could help you, your family, pets or bystanders avoid injury.

Controls

Become familiar with all the controls (Fig. 2) before you start the engine and operate the machine.

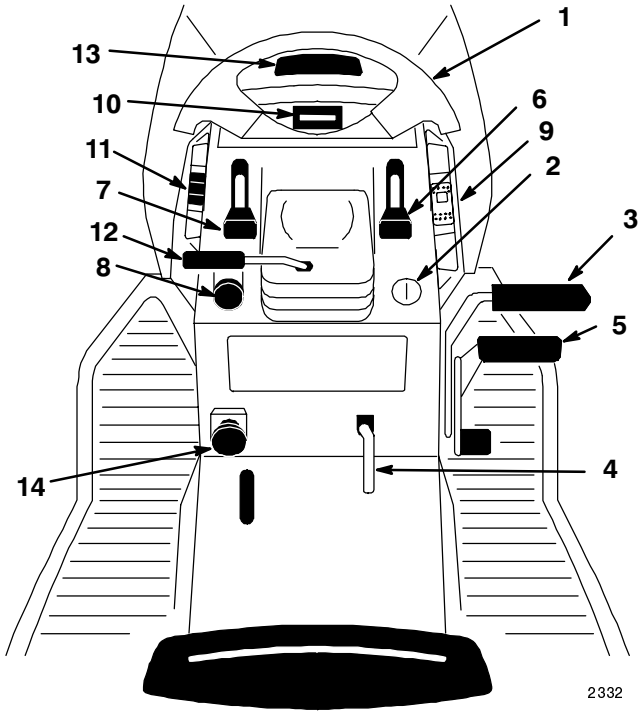

Figure 2

1. Steering wheel
2. Ignition switch
3. Brake pedal
4. Parking brake lever
5. Ground speed selector
6. Throttle lever
7. Choke lever
8. Power take off (PTO)
9. Cruise control switch
10. Indicator control module/Hourmeter
11. Attachment lift switch
12. Tilt wheel lever
13. Hood opening
14. Dial-a-height knob

Parking Brake

Always set the parking brake when you stop the machine or leave it unattended.

Setting the Parking Brake

1. Push the brake pedal (Fig. 3) down and hold it in the depressed position.
2. Lift the parking brake lever (Fig. 3) up and gradually take your foot off the brake pedal. The brake pedal should stay in the depressed (locked) position.

Releasing the Parking Brake

1. Push down on the brake pedal (Fig. 3). The parking brake lever should release.
2. Gradually release the brake pedal.

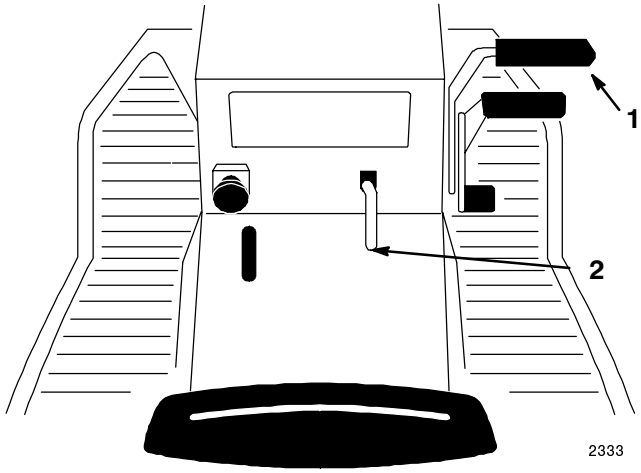

Figure 3

1. Brake pedal
2. Parking brake lever

Starting and Stopping the Engine

Starting

1. Sit down on the seat.
2. Set the parking brake; refer to Setting the Parking Brake, page 13.

Note: The engine will not start unless you set the parking brake or fully depress the brake pedal.

3. Push the PTO (power take off) to “OFF” (Fig. 7).
4. Move the choke lever to “ON” (Fig. 4).

Note: An engine that has been running and is warm may not require step 4.

5. Move throttle lever to “FAST” (Fig. 5).

6. After the engine starts, move the choke lever to “OFF” (Fig. 4). If the engine stalls or hesitates, move the choke lever back to “ON” for a few seconds. Then move the throttle lever to desired setting. Repeat this as required.

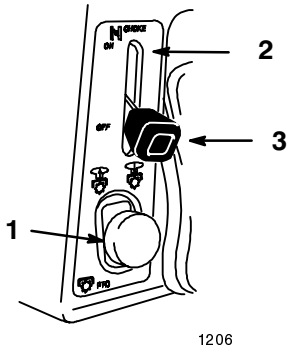

Figure 4

1. PTO—Off
2. Choke-On
3. Choke-Off

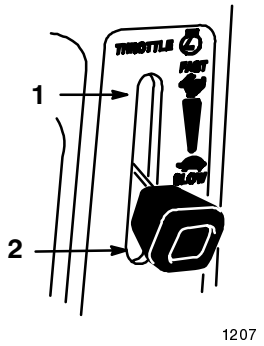

Figure 5

1. Fast
2. Slow

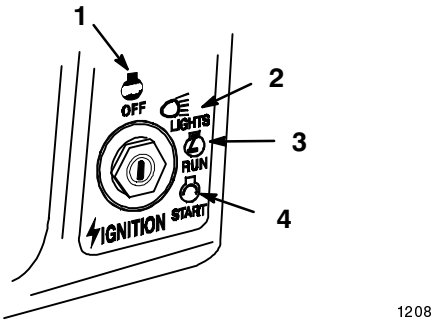

Figure 6

1. Off
2. Lights
3. Run
4. Start

Stopping

1. Push the PTO (power take off) to “OFF” (Fig. 7).
2. Move the throttle lever to “SLOW” (Fig. 5).
3. Let engine idle for 30-60 seconds.
4. Turn the ignition key to “OFF” (Fig. 6).

Operating the Power Take Off (PTO)

The power take off (PTO) engages and disengages power to the electric clutch.

While the ignition key is in “RUN” or “LIGHTS” position and the power take off (PTO) is engaged “ON”, the PTO light, in the Indicator Module, will be “ON”. When this light is “ON” it is a reminder the starter will not crank and to turn the off PTO before getting off the tractor.

Engaging the Power Take Off (PTO)

1. Depress the brake pedal to stop the machine.
2. Pull the power take off (PTO) to “ON” (Fig. 7).

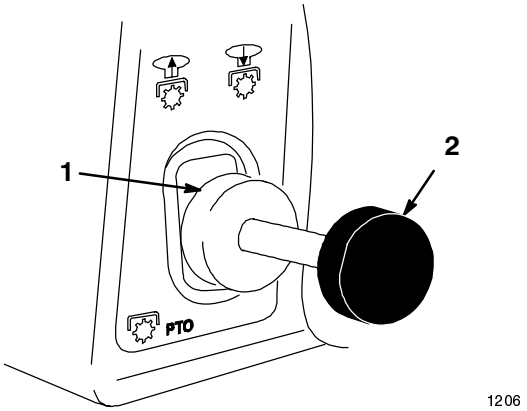

Figure 7

1. Off-Disengaged
2. On-Engaged

Disengaging the Power Take Off (PTO)

1. Depress the brake pedal to stop the machine.
2. Push the power take off (PTO) to “OFF” (Fig. 7).

The Safety Interlock System

Caution

If safety interlock switches are disconnected or damaged the machine could operate unexpectedly causing personal injury.

- **Do not tamper with the interlock switches.**
- **Check the operation of the interlock switches daily and replace any damaged switches before operating the machine.**

Understanding the Safety Interlock System

The safety interlock system is designed to prevent the engine from starting unless:

- You are sitting on the seat
- The brake pedal is depressed

- The power take off (PTO) is “OFF”
- The hydro control pedal is in the neutral position.

The safety interlock system is designed to stop the engine if:

- You rise from the seat when the brake pedal is released
- You rise from the seat when the power take off (PTO) is “ON”.
- You move the hydro control pedal out of the neutral position when the parking brake is engaged.

The safety interlock system is designed to stop the power take off (PTO) if:

- You shift into reverse with the power take off (PTO) engaged.

Setting the KeyChoice™ Switch to Operate in Reverse

An interlock feature on the tractor prevents the power take off (PTO) from operating when backing up. If you shift into reverse with the PTO engaged (i.e., with mower blades or other attachment running), the PTO will disengage. **Do not mow in reverse unless absolutely necessary.**

If you need to use the PTO while backing up, you can turn off this interlock feature using the KeyChoice switch located near the seat bracket (Fig. 8).

Danger

You could back over a child or bystander while the mower blade(s) or other attachment is engaged and cause serious injury or death.

- **Do not mow in reverse unless absolutely necessary.**
- **Do not insert the KeyChoice key unless it is absolutely necessary.**
- **Always look backward and down before backing up.**
- **Use the KeyChoice switch only if you are certain no children or other bystanders will enter the mowing area.**
- **Be very observant after deactivating the interlock because the sound of the engine may prevent you from noticing that a child or bystander has entered the work area.**
- **Always remove both the ignition and KeyChoice keys and put them in a safe place out of the reach of children or unauthorized users when leaving the unit unattended.**

1. Engage the PTO.
2. Insert the KeyChoice key into the switch (Fig. 8).

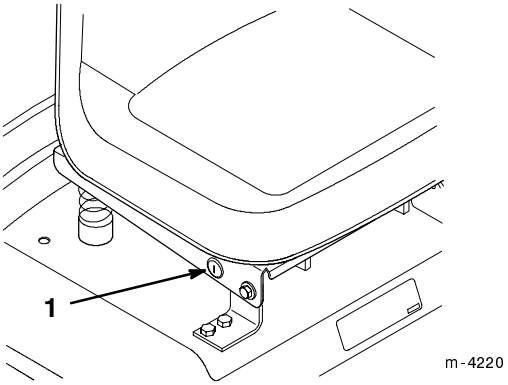

Figure 8

1. KeyChoice switch

3. Turn the KeyChoice key.

   A red light on the front console (Fig. 9) turns on, indicating that the interlock is disabled.

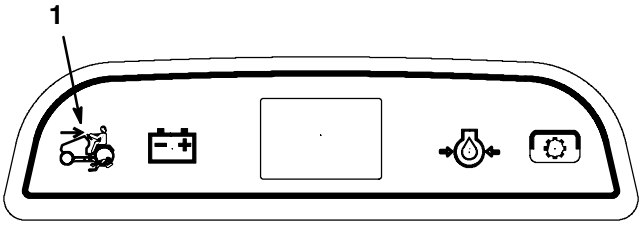

Figure 9

1. Operating-in-reverse light

4. Shift into reverse and complete your task.
5. Stop the PTO of the engine to activate the interlock.
6. Remove the KeyChoice key and put it in a safe place out of reach of children.

Testing the Safety Interlock System

Test the safety interlock system before you use the machine each time. If the safety system does not operate as described below, have an Authorized Service Dealer repair the safety system immediately.

1. Set the parking brake. Move the power take off (PTO) to “ON”. Now turn the ignition key to “START”; the engine should not crank.
2. Push the power take off (PTO) to “OFF” and release the parking brake. Now turn the ignition key to “START”; the engine should not crank.
3. Set the parking brake, move the power take off (PTO) to “OFF” and move the hydro control pedal forward from the neutral; the engine should not crank.

4. Set the parking brake and move the power take off (PTO) to “OFF”. Now start the engine. While the engine is running, release the parking brake and rise slightly from the seat; the engine should stop.

5. Set the parking brake and restart the engine. While the engine is running, and the parking brake is engaged, move the hydro pedal forward; the engine should stop.

6. With the parking brake released, turn the ignition key to RUN without starting the engine. Pull the PTO switch to ON. You should hear an audible click indicating the PTO is activated and the PTO light will illuminate. Move the foot pedal to reverse. You should hear an audible click indicating the PTO is deactivated and the PTO light should turn off.

7. With the parking brake released, turn the ignition switch to RUN without starting the engine. Pull the PTO switch to ON. Turn the KeyChoice key and release. The Operating-in-Reverse warning light should illuminate. Move the foot pedal to reverse. The PTO and PTO light on the dash should remain on. Push the PTO switch to OFF. The PTO light and the Operating-in-Reverse warning light should turn off.

Indicator Control Module

The indicator control module (Fig. 10) lights when the parking brake or power take off (PTO), is actuated and when there is a problem of low oil pressure or alternator output, that needs immediate attention.

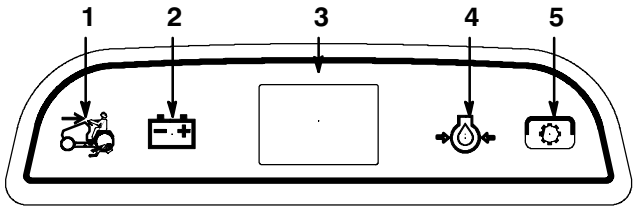

Figure 10

1. Operating–in–Reverse
2. Battery
3. Hourmeter
4. Oil
5. PTO (power take off)

Following are the conditions when indicator lights will be “ON”. At other times the lights should be off.

Operating in Reverse

The Operating-in-Reverse light will illuminate whenever the KeyChoice switch is used to deactivate the operating-in-reverse interlock. It is a reminder that the interlock system is deactivated. The light goes out whenever the power take off (PTO) is disengaged or the engine is shut off.

Battery

The battery light will be “ON” when the key is in the “RUN” or “LIGHTS” positions if the battery voltage is below 12.6 volts or when the engine is running and the alternator output is above 14.8 volts. When this light comes on it is important to have your battery and electrical system checked and the problem corrected.

Hourmeter

The hourmeter records the number of hours the engine has operated (Fig. 10). It is turned on when the ignition switch is in the “RUN” or “LIGHTS” positions. Use the times for scheduling regular maintenance.

Oil

The oil light will be “ON” when the key is in the “RUN” or “LIGHTS” positions and the engine is not running, after the engine is started the light should go out. When the engine is running if the oil pressure drops below a safe NO TAGNO TAGoperating level the light comes “ON”. When the light comes on while the engine is running, **Stop engine immediately and correct the cause of low oil pressure.**

PTO (Power Take Off)

The PTO (power take off) light will be “ON” when the key is in the “RUN” or “LIGHTS” positions and the PTO (power take off) is engaged “ON”. When this light is “ON” it is a reminder; the starter will not crank and turn off the PTO before getting off.

Driving Forward or Backward

The throttle control regulates the engine speed as measured in rpm (revolutions per minute). Place the throttle control in the “FAST” position for best performance.

To go forward or backward, release the parking brake; refer to Releasing the Parking Brake, page 13. Place your foot on the traction control pedal and slowly press on the top of the traction control pedal to move forward or on the bottom of the traction control pedal to move backward (Fig. 11). The father you move the traction control pedal in either direction, the faster the machine will move in that direction.

Note: For reverse motion, with the PTO engaged, the operating-in-reverse interlock must be deactivated by the KeyChoice switch located on the seat bracket on the right hand side just below the seat.

To slow down, release the pressure on the traction control pedal.

Important To avoid transmission damage, always release the parking brake before moving the traction control pedal.

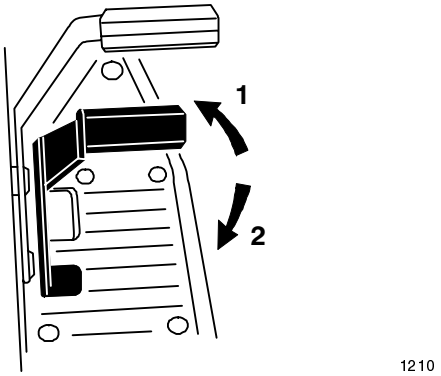

Figure 11

1. Forward
2. Backward

Stopping the Machine

To stop the machine, release the traction control pedal, disengage the power take off (PTO), and turn the ignition key to "OFF" to stop the engine. Also set the parking brake if you leave the machine unattended; refer to Setting the Parking Brake, page 13. Remember to remove the ignition and KeyChoice keys from the switches.

Caution

Children or bystanders may be injured if they move or attempt to operate the tractor while it is unattended.

Always remove the ignition and KeyChoice keys and set the parking brake when leaving the machine unattended, even if just for a few minutes.

Attachment Lift Lever

The attachment lift lever (Fig. 12) is used to raise and lower various attachments.

Raising Attachments

1. Depress the brake pedal to stop the machine.
2. Pull attachment lift lever rearward until latch locks. In this position the lift will hold the attachment in the up, or raised position.

Lowering Attachments

1. Depress the brake pedal to stop the machine.
2. Pull attachment lift lever rearward, to release lift pressure, and push the button on top to release the latch. Move lift lever forward to lower attachment.

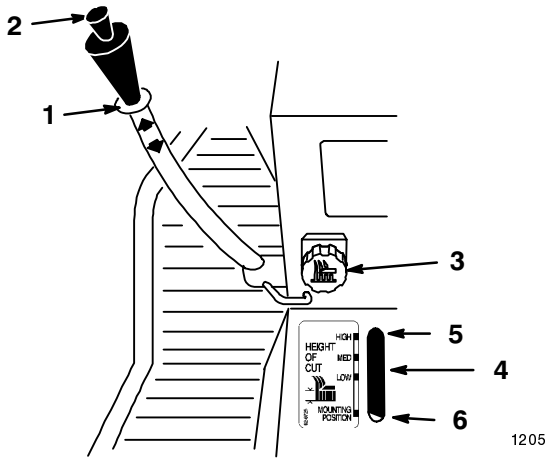

Figure 12

1. Lift lever
2. Button
3. Dial-A-Height
4. Indicator
5. High
6. Mounting position

Adjusting Dial-A-Height

The Dial-A-Height control (Fig. 12) is used to limit the downward travel of the attachment. The Dial-A-Height knob is rotated to change the location of this stop, up or down.

1. Raise the attachment lift lever; refer to Raising Attachments. In the raised position the Dial-A-Height knob (Fig. 12) can be rotated to change the stop location. Turn clockwise to raise and counterclockwise to lower the height of the attachment.
2. The Dial-A-Height indicator (Fig. 12) will show the change, high to low, in attachment lift height as adjustment is made.

Positioning the Seat

The seat can move forward and backward. Position the seat where you have the best control of the machine and are most comfortable.

1. Raise the seat and loosen the adjustment knobs (Fig. 13).
2. Slide the seat to the desired position and tighten the knobs.

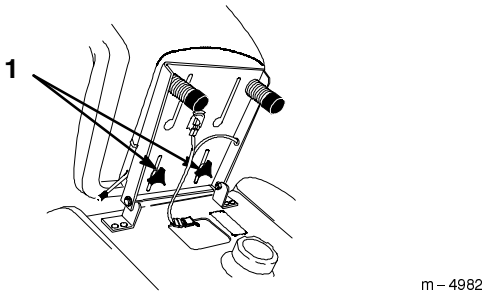

Figure 13

1. Adjustment knob

Headlights

The headlights are turned on with a separate position, “LIGHTS”, of the ignition switch (Fig. 14). The lights are on while the ignition switch is in the “LIGHTS” position even with the engine off. Remove the key when the machine is left unattended so lights can not be turned on discharging the battery.

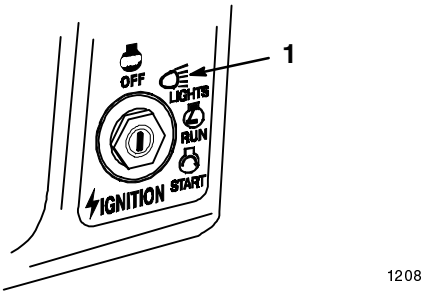

Figure 14

1. Lights

Positioning the Tilt Steering Wheel

The steering wheel has four tilt locations. Position the steering wheel where you have the best control of the machine and are most comfortable.

1. Lift the tilt lever to release the lock (Fig. 15).
2. Move the steering wheel to a comfortable position; then release the lever to lock.

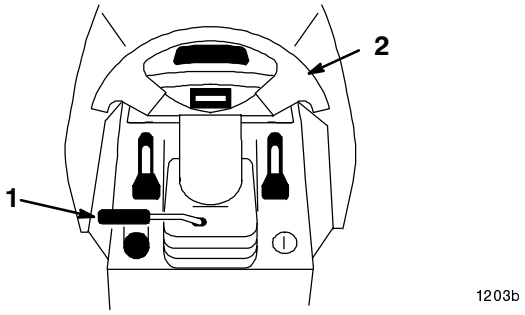

Figure 15

1. Tilt lever
2. Steering wheel

Pushing the Machine by Hand

Important Always push the machine by hand. Never tow the machine because transaxle damage may occur.

To Push the Machine

1. Disengage the power take off (PTO) and turn the ignition key to “OFF” to stop the engine.
2. Move the drive control rod to the “PUSH” position. This disengages the drive system and allows the wheels to turn freely (Fig. 16).

To Operate the Machine

1. Move the drive control rod to the “OPERATE” position (Fig. 16).

Note: The machine will not drive unless the drive control rod is in the “OPERATE” position.

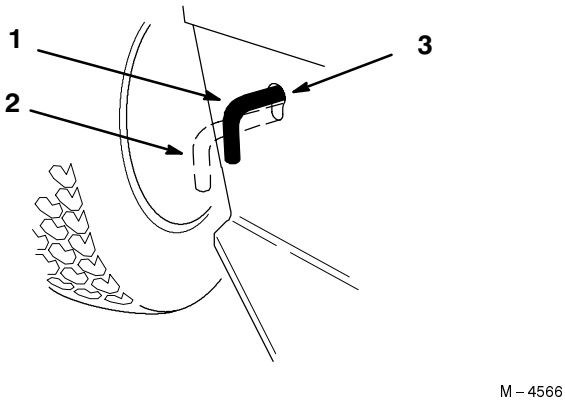

Figure 16

1. Operate position
2. Push position
3. Drive Control Rod

Maintenance

Recommended Maintenance Schedule

Maintenance Service Interval	Maintenance Procedure
After First Use	• Change oil
Each Use	• Check oil level • Check safety system • Check brake • Clean outside of engine
Every 5 Hours	• Check battery electrolyte
Every 25 Hours	• Service foam air cleaner[1] • Check spark plug(s) • Check tire pressure • Check front wheel toe-in
Every 50 Hours	• Grease chassis[1] • Check belts for wear/cracks
Every 100 Hours	• Change oil[1] • Replace paper air cleaner[1] • Replace fuel filter
Every 200 Hours	• Change oil filter[1]
Before Storage	• Change oil filter • Check brake • Grease chassis • Service foam air cleaner • Replace paper air cleaner • Check spark plug(s) • Check belts for wear/cracks • Drain gasoline • Clean outside of engine • Paint chipped surfaces • Check battery electrolyte • Charge battery and disconnect cables • Replace fuel filter • Check tire pressure • Check front wheel toe-in
After Storage	• Check safety system • Check brake • Check spark plug(s) • Check battery electrolyte • Check tire pressure

[1] More often in dusty, dirty conditions

Important Refer to your engine operator's manual for additional maintenance procedures.

Caution

If you leave the key in the ignition switch, someone could accidently start the engine and seriously injure you or other bystanders.

Remove the key from the ignition and disconnect the wire from the spark plug before you do any maintenance. Set the wire aside so that it does not accidentally contact the spark plug.

Air Cleaner

Service Interval/Specification

Foam Element: Clean and re-oil after every 25 operating hours, or yearly, whichever occurs first.

Paper Element: Replace after every 100 operating hours or yearly, whichever occurs first.

Note: Service the air cleaner more frequently (every few hours) if operating conditions are extremely dusty or sandy.

Removing the Foam and Paper Elements

1. Disengage the power take off (PTO), set the parking brake, and turn the ignition key to “OFF” to stop the engine. Remove the ignition key.
2. Open the hood.
3. Clean around the air cleaner to prevent dirt from getting into the engine and causing damage. Remove knob and the air cleaner cover (Fig. 17).

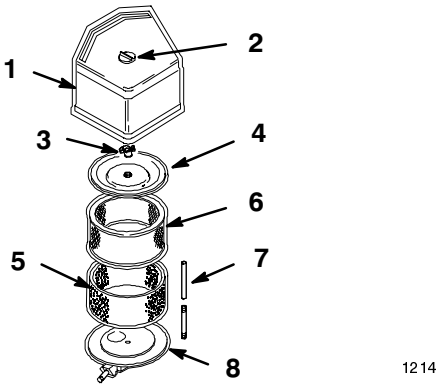

Figure 17

1. Air cleaner cover
2. Knob
3. Cover nut
4. Cover
5. Foam element
6. Paper element
7. Rubber seal
8. Air cleaner base

4. Carefully slide the foam element off the paper element (Fig. 17).
5. Unscrew the cover nut and remove the cover and paper element (Fig. 17).

Cleaning the Foam and Paper Elements

1. Foam Element
   A. Wash the foam element in liquid soap and warm water. When the element is clean, rinse it thoroughly.
   B. Dry the element by squeezing it in a clean cloth.
   C. Put one or two ounces of oil on the element (Fig. 18). Squeeze the element to distribute the oil.

Important Replace the foam element if it is torn or worn.

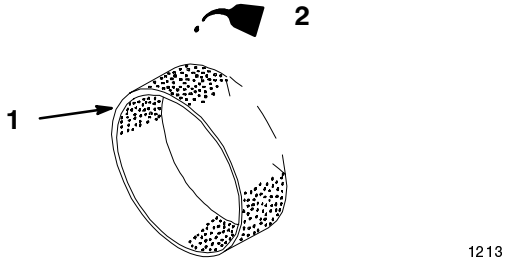

Figure 18

1. Foam element
2. Oil

2. Paper Element
   A. Lightly tap the element on a flat surface to remove dust and dirt (Fig. 19).
   B. Inspect the element for tears, an oily film, and damage to the rubber seal.

Important Never clean the paper element with pressurized air or liquids, such as solvent, gas, or kerosene. Replace the paper element if it is damaged or cannot be cleaned thoroughly.

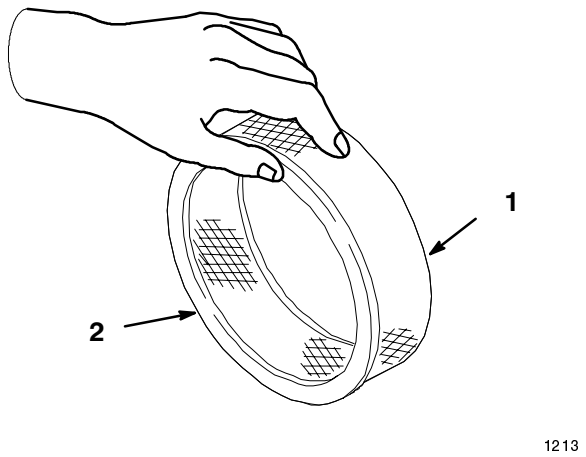

Figure 19

1. Paper element
2. Rubber seal

Installing the Foam and Paper Elements

Important To prevent engine damage, always operate the engine with the complete foam and paper air cleaner assembly installed.

1. Carefully slide the foam element onto the paper air cleaner element (Fig. 17).
2. Slide the air cleaner assembly and cover onto the long rod. Now screw the cover nut finger-tight against the cover (Fig. 17).

Note: Make sure the rubber seal is flat against the air cleaner base and cover.

3. Install the air cleaner cover (Fig. 17).
4. Close the hood.

Engine Oil

Service Interval/Specification

Change oil:

- After the first 5 operating hours.
- After every 100 operating hours.

Note: Change oil more frequently when operating conditions are extremely dusty or sandy.

Oil Type: Detergent oil (API service SF or SG)

Crankcase Capacity: w/filter, 1.9l (4 pints)

Viscosity: See table below

USE THESE SAE VISCOSITY OILS

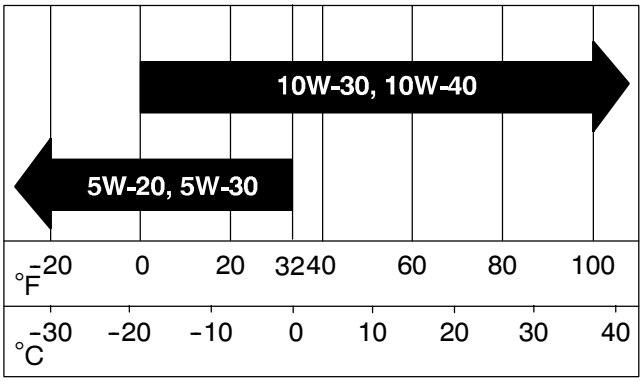

Checking Oil Level

1. Park the machine on a level surface, disengage the power take off (PTO), set the parking brake, and turn the ignition key to “OFF” to stop the engine. Remove the ignition key.
2. Open the hood.
3. Clean around the oil dipstick (Fig. 20) so dirt cannot fall into the filler hole and damage the engine.
4. Unscrew the oil dipstick and wipe the metal end clean (Fig. 20).
5. Slide the oil dipstick fully into the filler tube, do not thread onto tube (Fig. 20). Pull the dipstick out and look at the metal end. If oil level is low, slowly pour only enough oil into the filler tube to raise the level to the “FULL” mark.

Important Do not overfill the crankcase with oil because the engine may be damaged.

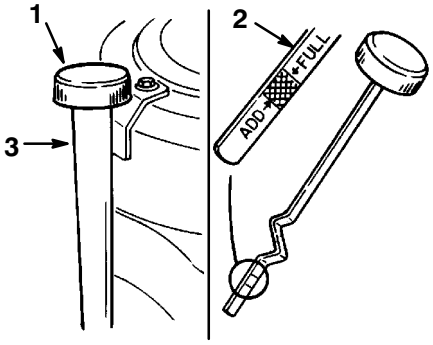

Figure 20

1. Oil dipstick
2. Metal end
3. Filler tube

Changing/Draining Oil

1. Start the engine and let it run five minutes. This warms the oil so it drains better.
2. Park the machine so that the drain side is slightly lower than the opposite side to assure the oil drains completely. Then disengage the power take off (PTO), set the parking brake, and turn the ignition key to "OFF" to stop the engine. Remove the ignition key.
3. Open the hood.
4. Slide a piece of hose over oil drain to direct oil.
5. Place a pan below the oil drain. Open the drain by turning counterclockwise, 1/8 turn and pull out (Fig. 21).
6. When oil has drained completely, close the drain by pushing in and turning clockwise, 1/8 turn.

Note: Dispose of the used oil at a certified recycling center.

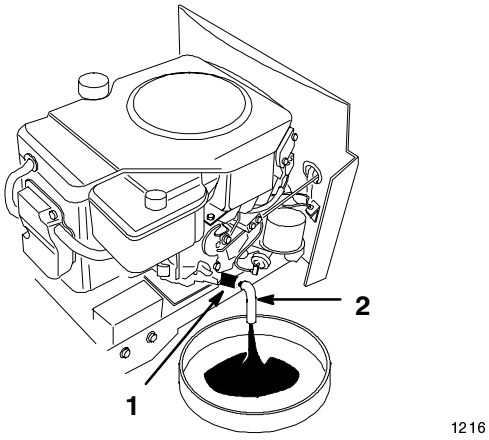

Figure 21

1. Oil drain
2. Hose

7. Slowly pour approximately 80% of the specified amount of oil into the filler tube (Fig. 20). Now check the oil level; refer to Checking Oil Level, page 21. Slowly add additional oil to bring to "FULL" mark on dipstick.

Change Oil Filter

Service Interval/Specification

Replace the oil filter every 200 hours or every other oil change.

Note: Change oil filter more frequently when operating conditions are extremely dusty or sandy.

1. Drain the oil from the engine; refer to Changing/Draining Oil, page 22.
2. Remove the old filter and wipe the filter adapter (Fig. 22) gasket surface.
3. Apply a thin coat of new oil to the rubber gasket on the replacement filter (Fig. 22).

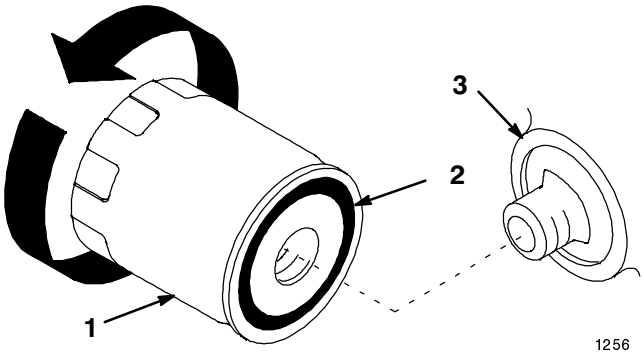

Figure 22

1. Oil filter
2. Gasket
3. Adapter

4. Install the replacement oil filter to the filter adapter. Turn the oil filter clockwise until the rubber gasket contacts the filter adapter, then tighten the filter an additional 1/2 turn (Fig. 22).
5. Fill the crankcase with the proper type of new oil; refer to Changing/Draining Oil, page 22.

Spark Plug

Service Interval/Specification

Check the spark plug(s) after every 200 operating hours. Make sure the air gap between the center and side electrodes is correct before installing the spark plug. Use a spark plug wrench for removing and installing the spark plug(s) and a gapping tool/feeler gauge to check and adjust the air gap.

Type: Champion RC-12YC (or equivalent)
Air Gap: 1.02 mm (0.040″)

Removing the Spark Plug(s)

1. Disengage the power take off (PTO), set the parking brake, and turn the ignition key to "OFF" to stop the engine. Remove the ignition key.
2. Open the hood.
3. Pull the wire(s) off the spark plug(s) (Fig. 23). Now clean around the spark plug(s) to prevent dirt from falling into the engine and potentially causing damage.
4. Remove the spark plug(s).

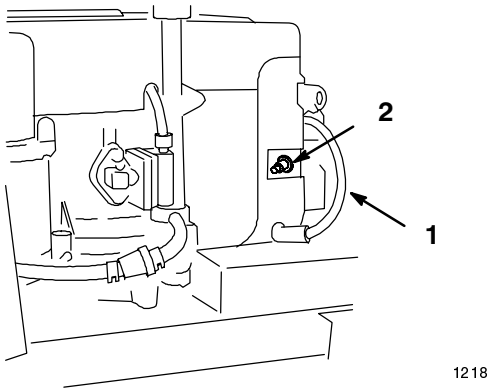

Figure 23

1. Spark plug wire
2. Spark plug

Checking the Spark Plug

1. Look at the center of the spark plug(s) (Fig. 24). If you see light brown or gray on the insulator, the engine is operating properly. A black coating on the insulator usually means the air cleaner is dirty.

Important Never clean the spark plug(s). Always replace the spark plug(s) when it has a black coating, worn electrodes, an oily film, or cracks.

2. Check the gap between the center and side electrodes (Fig. 24). Bend the side electrode (Fig. 24) if the gap is not correct.

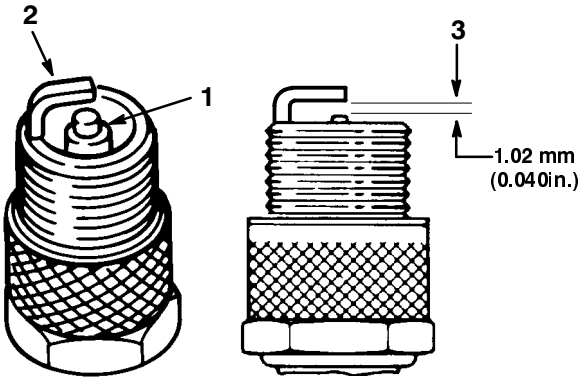

Figure 24

1. Center electrode insulator
2. Side electrode
3. Air gap (not to scale)

Installing the Spark Plug(s)

1. Install the spark plug(s). Make sure the air gap is set correctly.
2. Tighten the spark plug(s) to 27 Nm (20 ft-lb).
3. Push the wire(s) onto the spark plug(s) (Fig. 23).
4. Close the hood.

Greasing and Lubrication

Service Interval/Specification

Grease the machine after every 50 operating hours or yearly, whichever occurs first. Grease more frequently when operating conditions are extremely dusty or sandy.

Grease Type: General-purpose grease.

How to Grease

1. Disengage the power take off (PTO), set the parking brake, and turn the ignition key to “OFF” to stop the engine. Remove the ignition key.
2. Clean the grease fittings with a rag. Make sure to scrape any paint off the front of the fitting(s).
3. Connect a grease gun to the fitting. Pump grease into the fittings until grease begins to ooze out of the bearings.
4. Wipe up any excess grease.

Where to Add Grease

1. Lubricate the front wheels and spindles until grease begins to ooze out of the bearings (Fig. 25).
2. Lubricate the front axle pivot (Fig. 25).

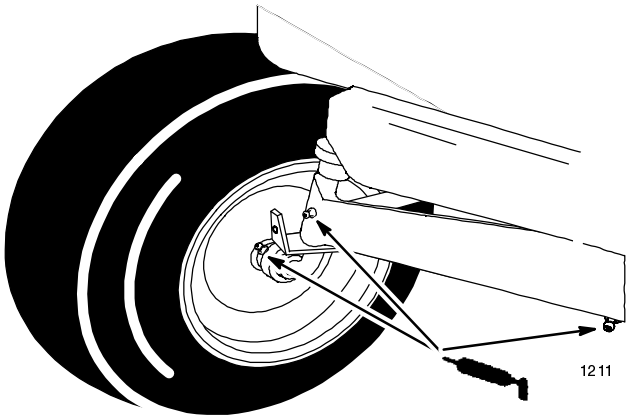

Figure 25

3. Lubricate the traction control pedal on hydrostatic models (or brake and clutch pedals on gear drive models) where they pivot on mounting shaft (Fig. 26).

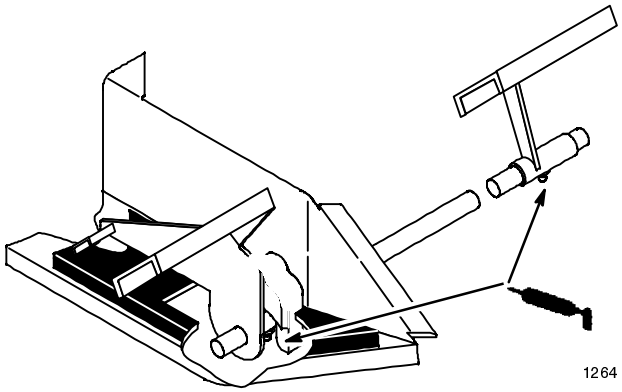

Figure 26

Tire Pressure

Service Interval/Specification

Maintain the air pressure in the front and rear tires as specified. Check the pressure at the valve stem after every 25 operating hours or monthly, whichever occurs first (Fig. 27). Check the tires when they are cold to get the most accurate pressure reading.

Pressure: 138 kPa (20 psi) front and rear

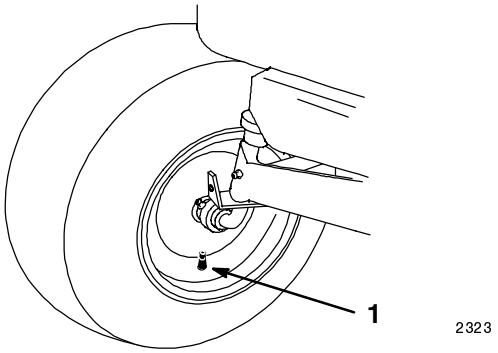

Figure 27

1. Valve stem

Brake

Always set the parking brake when you stop the machine or leave it unattended. If the parking brake does not hold securely, an adjustment is required.

Checking the Brake

1. Park the machine on a level surface, disengage the power take off (PTO), set the parking brake, and turn the ignition key to “OFF” to stop the engine. Remove the ignition key.
2. Rear wheels must lock and skid when you try to push the tractor forward. Adjustment is required if the wheels turn and do not lock; refer to Adjusting the Brake, page 24.
3. Release the brake and move the drive control rod to the “PUSH” position; refer to Pushing the Machine by Hand, page 18. Wheels should rotate freely.
4. If both conditions are met no adjustment is required.

Adjusting the Brake

1. Check the brake before you adjust it; refer to Checking the Brake, page 24.
2. Release the parking brake; refer to Releasing the Parking Brake, page 13.
3. To adjust the brake remove the cotter pin and loosen the brake adjusting nut slightly (Fig. 28).
4. Carefully insert a .38 mm (0.015″) feeler gauge between the outer brake pad and rotor disk (Fig. 28).
5. Tighten the brake adjusting nut until slight resistance is felt on the feeler gauge when sliding it in and out. Install cotter pin.
6. Check the brake operation again; refer to Checking the Brake, page 24.

Important With the parking brake released, the rear wheels must rotate freely when you push the mower. If the .38 mm (0.015”) clearance and free wheel rotation cannot be achieved contact your service dealer immediately.

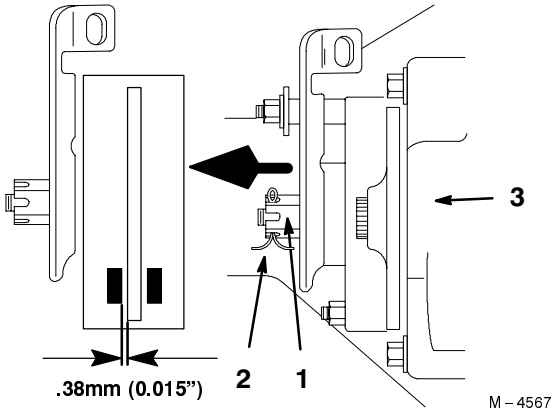

Figure 28

1. Brake adjusting nut
2. Cotter pin
3. Right Front of Transaxle

Fuel Tank

Draining The Fuel Tank

Danger

In certain conditions, gasoline is extremely flammable and highly explosive. A fire or explosion from gasoline can burn you and others and can damage property.

- **Drain gasoline from the fuel tank when the engine is cold. Do this outdoors in an open area. Wipe up any gasoline that spills.**
- **Never smoke when draining gasoline, and stay away from an open flame or where a spark may ignite the gasoline fumes.**

1. Park the machine on a level surface, to assure fuel tank drains completely. Then disengage the power take off (PTO), set the parking brake, and turn the ignition key to “OFF” to stop the engine. Remove the ignition key.
2. Close fuel shut-off valve at fuel tank (Fig. 29).

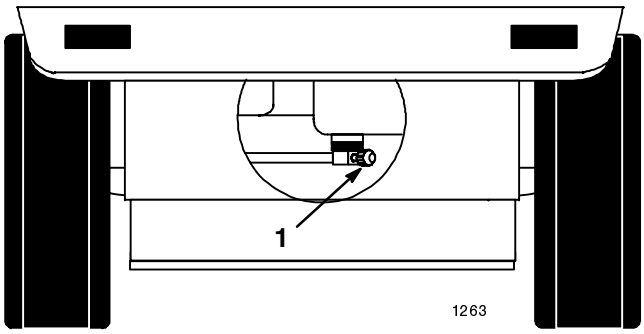

Figure 29

1. Fuel shut-off valve

3. Open the hood.
4. Squeeze the ends of the hose clamp together and slide it up the fuel line toward the fuel tank (Fig. 30).
5. Pull the fuel line off the filter (Fig. 30). Open fuel shut-off valve and allow gasoline to drain into an approved gas can.

Note: Now is the best time to install a new fuel filter because the fuel tank is empty.

6. Install the fuel line onto the filter. Slide the hose clamp close to the filter to secure the fuel line and filter. Refer to Replacing the Fuel Filter; page 25.

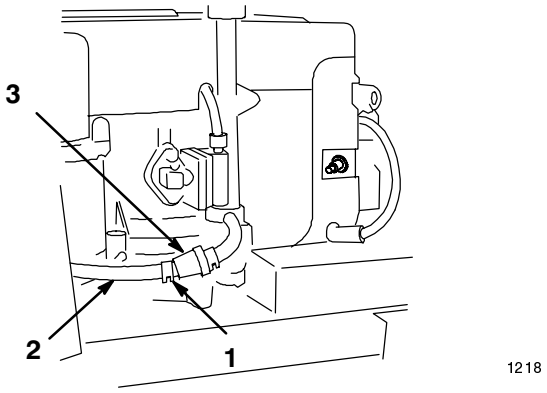

Figure 30

1. Hose clamp
2. Fuel line
3. Filter

Fuel Filter

Service Interval/Specification

Replace the fuel filter after every 100 operating hours or yearly, whichever occurs first.

Replacing the Fuel Filter

Never install a dirty filter if it is removed from the fuel line.

1. Disengage the power take off (PTO), set the parking brake, and turn the ignition key to “OFF” to stop the engine. Remove the ignition key.
2. Close fuel shut-off valve at fuel tank (Fig. 29).
3. Open the hood.
4. Squeeze the ends of the hose clamps together and slide them away from the filter (Fig. 31).
5. Remove the filter from the fuel lines.

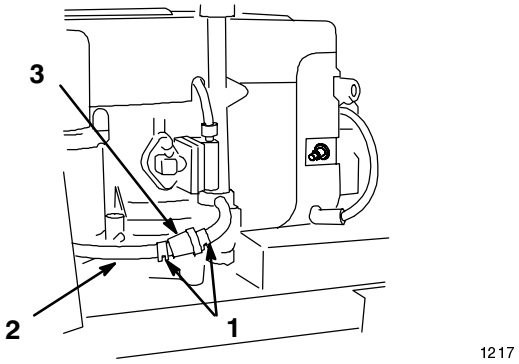

Figure 31

1. Hose clamp
2. Fuel line
3. Filter

6. Install a new filter and move the hose clamps close to the filter.
7. Open fuel shut-off valve at fuel tank (Fig. 29).
8. Close the hood.

Front Wheel Toe-In

Service Interval/Specification

Maintain toe-in of the front wheels as specified. If uneven tire wear, lawn scuffing or hard steering develop adjustment may be required. Check the toe-in after every 100 operating hours or yearly, whichever occurs first (Fig. 32).

Specification: 3mm-6mm (1/8-1/4) inch toe-in on front wheels.

Measuring Toe-in

1. Disengage the power take off (PTO), set the parking brake, and turn the ignition key to "OFF" to stop the engine. Remove the ignition key.
2. Push front tires out, at front, to remove normal looseness in the linkage.
3. Measure, between the rims, at spindle level, in the front and rear of the wheels (Fig. 32).
4. The front measurement should be less than the rear, as specified.

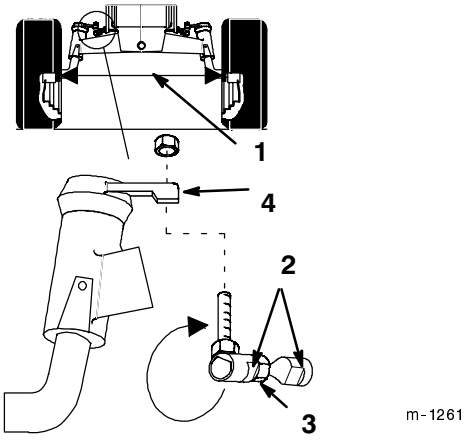

Figure 32

1. Measure here
2. Flats
3. Jam nut
4. Steering lever

Adjusting Toe-In

1. Check the toe-in before you adjust it; refer to Measuring Toe-In, Page 26.
2. Remove ball joint from one steering lever (Fig. 32).
3. Loosen jam nut securing ball joint to steering rod. Rotate ball joint one turn, clockwise to increase or counter clockwise to decrease toe-in.
4. Hold flats on ball joint to align with flats on tie rod and tighten jam nut (Fig. 32).
5. Install ball joint to steering lever and check the toe-in; refer to Measuring Toe-In, Page 32.

Important If more than one turn is required to meet specifications, alternate between left and right steering rods to maintain steering wheel alignment.

Transaxle Fluid

Service Interval/Specification

The transaxle is a sealed system and no checking or changing of the fluid is required.

Important If any transaxle problems arise, contact your local Authorized Service Dealer for help and service.

Fuse

Service Interval/Specification

The electrical system is protected by fuses. It requires no maintenance, however, if a fuse blows check component/circuit for malfunction or short. To replace fuses pull up on the fuse (Fig. 33) to remove or replace it.

Fuse: Main/Starter F1—30 amp, blade-type
Alternator F2—25 amp, blade-type
Dash/Hour meter F3—10 amp, blade-type
Head lights F4—10 amp, blade-type

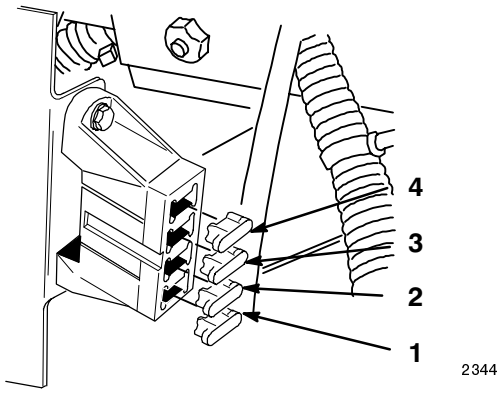

Figure 33

1. Main—30 amp
2. Alternator—25 amp
3. Dash/Hour meter—10 amp
4. Head lights—10 amp

Headlights

Specification: Bulb # 1156 Automotive Type

Removing the Bulb

1. Disengage the power take off (PTO), set the parking brake, and turn the ignition key to “OFF” to stop the engine. Remove the ignition key.
2. Open the hood. Pull wire connectors off both bulb holder terminals.
3. Rotate the bulb holder 1/4 turn counterclockwise and remove it from the reflector (Fig. 34).
4. Push and rotate the bulb counterclockwise until it stops (approx. 1/4 turn) and remove bulb from the bulb holder (Fig. 35).

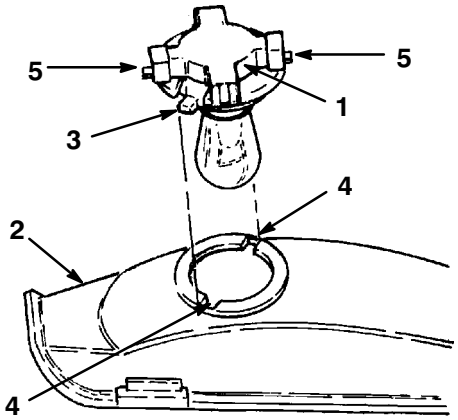

Figure 34

1. Bulb holder
2. Reflector
3. Tabs
4. Slots
5. Terminals

Installing the Bulb

1. The bulb has metal pins on the side of its base. Align the pins with the slots in the bulb holder and insert the base into the holder (Fig. 35). Push and rotate the bulb clockwise until it stops.

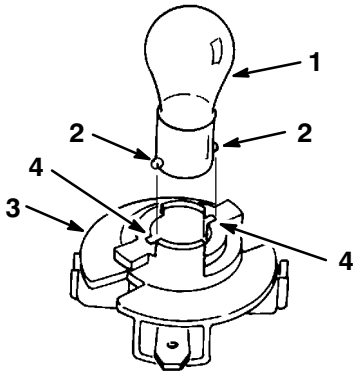

Figure 35

1. Bulb
2. Metal pins
3. Bulb holder
4. Slots

2. The bulb holder has two tabs (Fig. 34). Align the tabs with the slots in the reflector, insert the bulb holder into the reflector and rotate it 1/4 turn clockwise until it stops.
3. Push the wire connectors onto the terminals on the bulb holder.

Battery

Warning

Battery posts, terminals, and related accessories contain lead and lead compounds, chemicals known to the State of California to cause cancer and reproductive harm. ***Wash hands after handling.***

Service Interval/Specification

Always keep the battery clean and fully charged. Use a paper towel to clean the battery case. If the battery terminals are corroded, clean them with a solution of four parts water and one part baking soda. Apply a light coating of grease to the battery terminals to prevent corrosion.

Voltage: 12 v, 260 Cold Cranking Amps

Removing the Battery

Warning

Battery terminals or metal tools could short against metal tractor components causing sparks. Sparks can cause the battery gasses to explode, resulting in personal injury.

- **When removing or installing the battery, do not allow the battery terminals to touch any metal parts of the tractor.**
- **Do not allow metal tools to short between the battery terminals and metal parts of the tractor.**

Warning

Incorrect battery cable routing could damage the tractor and cables causing sparks. Sparks can cause the battery gasses to explode, resulting in personal injury.

- **Always DISCONNECT the negative (black) battery cable before disconnecting the positive (red) cable.**
- **Always RECONNECT the positive (red) battery cable before reconnecting the negative (black) cable .**

1. Disengage the power take off (PTO), set the parking brake, and turn the ignition key to “OFF” to stop the engine. Remove the key.
2. Open the hood and locate the battery.
3. Remove side panels for clearance when removing battery (Fig. 37). Remove screws and lift up to clear pin and slide panel tabs out from steering tower.
4. Disconnect the negative (black) ground cable from the battery post (Fig. 36).
5. Lift the red rubber cover up on the positive cable. Disconnect the positive cable (red cover) from the battery post (Fig. 36).
6. Remove the battery hold down strap (Fig. 36). Remove battery from the tractor.

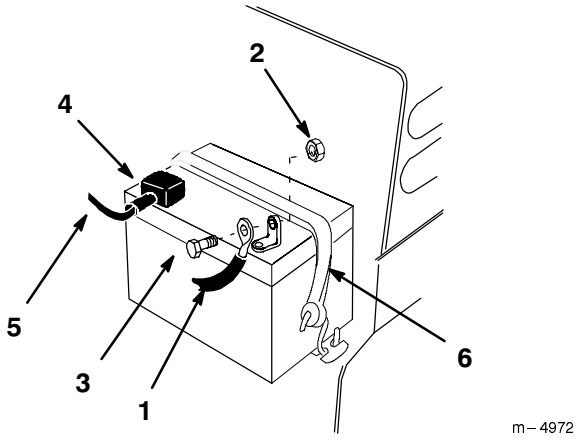

Figure 36

1.	Negative cable	4.	Rubber cover (red)
2.	Nut	5.	Positive cable
3.	Bolt	6.	Battery Hold Down Strap

Installing the Battery

1. Install the battery into the tractor (Fig. 37).
2. Secure battery with hold down strap (Fig. 36).
3. Using the bolt and nut, connect the positive (red cover) cable to the positive (+) battery post (Fig. 36). Slide the rubber cover over the battery post.
4. Using the bolt and nut, connect the negative (black) cable to the negative (-) battery post (Fig. 36).
5. Install side panels by sliding tabs into steering tower and inserting pin into flange of footrest. Secure with screws (Fig. 37).

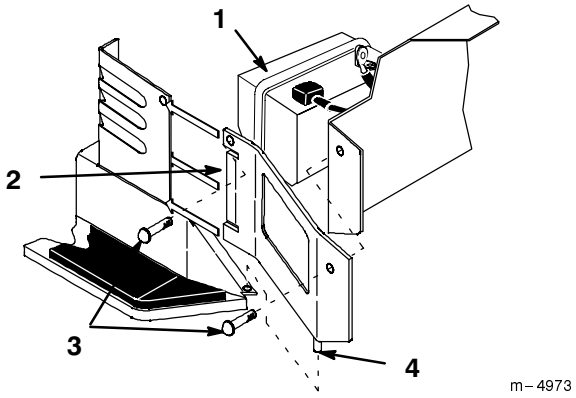

Figure 37

1.	Battery	3.	Screw
2.	Side panel tabs	4.	Pin

Checking Electrolyte Level

1. With the engine off, open the hood to locate the battery.
2. Look at the side of the battery. The electrolyte must be up to the “UPPER” line (Fig. 38). Do not allow the electrolyte to get below the “LOWER” line (Fig. 38).
3. If the electrolyte is low, add the required amount of distilled water; refer to Adding Water to the Battery, page 29.

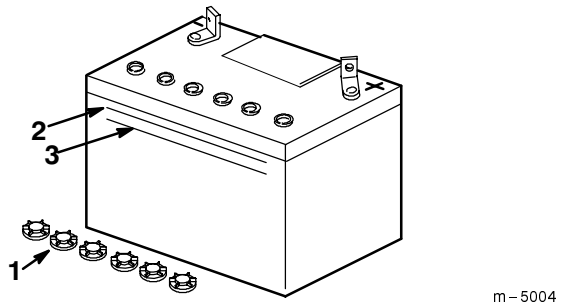

Figure 38

1. Filler caps
2. UPPER line
3. LOWER line

Danger

Battery electrolyte contains sulfuric acid which is a deadly poison and causes severe burns.

- **Do not drink electrolyte and avoid contact with skin, eyes or clothing. Wear safety glasses to shield your eyes and robber gloves to protect your hands.**
- **Fill the battery where clean water is always available for flushing the skin.**
- **Follow all instructions and comply with all safety messages on the electrolyte container.**

Adding Water to the Battery

The best time to add distilled water to the battery is just before you operate the machine. This lets the water mix thoroughly with the electrolyte solution.

1. Remove the battery from the tractor.
2. Clean the top of the battery with a paper towel.

Note: Never fill the battery with distilled water while the battery installed in the tractor. Electrolyte could be spilled on other parts and cause corrosion.

3. Remove the vent caps from the battery (Fig. 38).
4. Slowly pour distilled water into each battery cell until the level is up to the “UPPER” line (Fig. 38) on the battery case.

Important Do not overfill the battery because electrolyte (sulfuric acid) can cause severe corrosion and damage to the chassis.

5. Wait five to ten minutes after filling the battery cells. Add distilled water, if necessary, until the electrolyte level is up to the “UPPER” line (Fig. 38) on the battery case.
6. Reinstall battery vent caps.

Charging the Battery

Warning

Charging the battery produces gasses that can explode.

Never smoke near the battery and keep sparks and flames away from battery.

Important Always keep the battery fully charged (1.265 specific gravity). This is especially important to prevent battery damage when the temperature is below 0°C (32°F).

1. Remove the battery from the chassis; refer to Removing the Battery, page 28.
2. Check the electrolyte level; refer to Checking Electrolyte Level, page 29.
3. Make sure the filler caps are installed in battery. Charge battery for 10 to 15 minutes at 25 to 30 amps or 30 minutes at 4-6 amps.
4. When the battery is fully charged, unplug the charger from the electrical outlet, then disconnect the charger leads from the battery posts (Fig. 39).

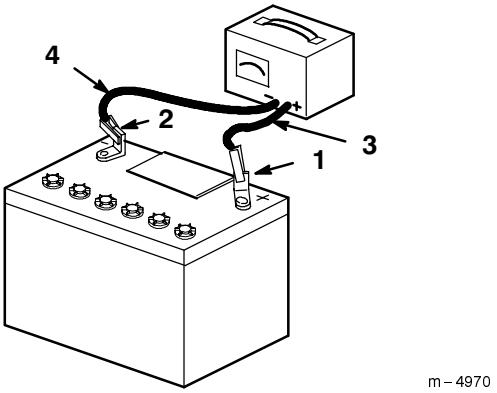

Figure 39

1. Positive Battery Post
2. Negative Battery Post
3. Red (+) Charger Lead
4. Black (–) Charger Lead

---

5. Install the battery in the tractor and connect the battery cables. Refer to Installing the Battery on page 28.

Note: Do not run the tractor with the battery disconnected, electrical damage may occur.

Wiring Diagram

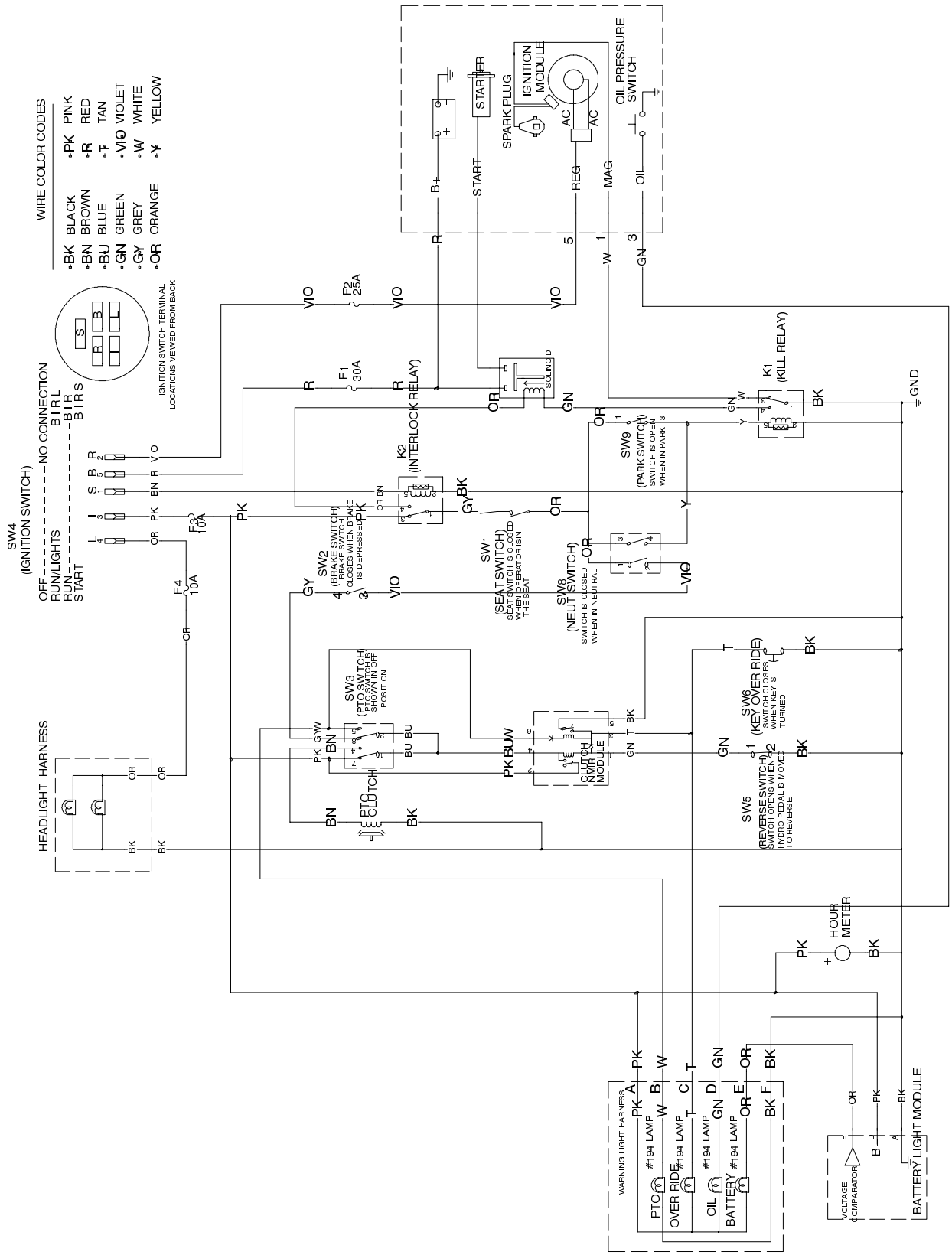

Cleaning and Storage

1. Disengage the power take off (PTO), set the parking brake, and turn the ignition key to “OFF” to stop the engine. Remove the ignition and KeyChoice keys.

2. Remove grass clippings, dirt, and grime from the external parts of the entire machine, especially the engine. Clean dirt and chaff from the outside of the engine’s cylinder head fins and blower housing.

Important You can wash the machine with mild detergent and water. Do not pressure wash the machine. Avoid excessive use of water, especially near the control panel, lights, engine, and the battery.

3. Check the brake; refer to Brake, page 24.

4. Service the air cleaner; refer to Air Cleaner, page 20.

5. Grease the chassis; refer to Greasing and Lubrication, page 23.

6. Change the crankcase oil and filter; refer to Engine Oil, page 21.

7. Check the tire pressure; refer to Tire Pressure, page 24.

8. Prepare the machine for storage when non-use occurs over 30 days. Prepare machine for storage as follows.

   A. Add a petroleum based stabilizer/ conditioner to fuel in the tank. Follow mixing instructions from stabilizer manufacture. **Do not use an alcohol based stabilizer (ethanol or methanol).**

Note: A fuel stabilizer/conditioner is most effective when mixed with fresh gasoline and used at all times.

   B. Run engine to distribute conditioned fuel through the fuel system (5 minutes).

   C. Stop engine, allow to cool and drain the fuel tank; refer to Fuel Tank, page 25.

   D. Restart engine and run it until it stops.

   E. Choke or prime the engine. Start and run engine until it will not start. Operate primer, if equipped on machine, several times to ensure fuel remains in primer system.

   F. Dispose of fuel properly. Recycle as per local codes.

9. Remove the spark plug(s) and check its condition; refer to Spark Plug, page 22. With the spark plug(s) removed from the engine, pour two tablespoons of engine oil into the spark plug hole. Now use the electric starter to crank the engine and distribute the oil inside the cylinder. Install the spark plug(s) and tighten it to 40 Nm (30 ft-lb). Do not install the wire on the spark plug(s).

Important Do not store stabilizer/conditioned gasoline over 90 days.

10. Disconnect the negative battery cable. Clean the battery and battery terminals. Check the electrolyte level and charge it fully; refer to Battery on page 27. Leave the negative battery cable disconnected from the battery during storage.

Important The battery must be fully charged to prevent it from freezing and being damaged at temperatures below 0°C (32°F). A fully charged battery can be stored one winter season without recharging.

11. Check and tighten all bolts, nuts, and screws. Repair or replace any part that is damaged or defective.

12. Paint all scratched or bare metal surfaces. Paint is available from your Authorized Service Dealer.

13. Store the machine in a clean, dry garage or storage area. Remove the keys from the ignition and KeyChoice switches and keep it in a memorable place. Cover the machine to protect it and keep it clean.

Troubleshooting

Problem	Possible Causes	Corrective Action
Starter does not crank	1. Blade control (PTO) is ENGAGED. 2. Parking brake is not on. 3. Operator is not seated. 4. Battery is dead. 5. Electrical connections are corroded or loose. 6. Fuse is blown. 7. Relay or switch is defective.	1. Move blade control (PTO) to DISENGAGED. 2. Set parking brake. 3. Sit on the seat. 4. Charge the battery. 5. Check electrical connections for good contact. 6. Replace fuse. 7. Contact Authorized Service Dealer.
Engine will not start, starts hard, or fails to keep running.	1. Fuel tank is empty. 2. Choke is not ON. 3. Air cleaner is dirty. 4. Spark plug wire is loose or disconnected. 5. Spark plug is pitted, fouled, or gap is incorrect. 6. Dirt in fuel filter. 7. Dirt, water, or stale fuel is in fuel system.	1. Fill fuel tank with gasoline. 2. Move choke lever to ON. 3. Clean or replace air cleaner element. 4. Install wire on spark plug. 5. Install new, correctly gapped spark plug. 6. Replace fuel filter. 7. Contact Authorized Service Dealer.
Engine loses power.	1. Engine load is excessive. 2. Air cleaner is dirty. 3. Oil level in crankcase is low. 4. Cooling fins and air passages under engine blower housing are plugged. 5. Spark plug is pitted, fouled, or gap is incorrect. 6. Vent hole in fuel cap is plugged. 7. Dirt in fuel filter. 8. Dirt, water, or stale fuel is in fuel system.	1. Reduce ground speed. 2. Clean air cleaner element. 3. Add oil to crankcase. 4. Remove obstruction from cooling fins and air passages. 5. Install new, correctly gapped spark plug. 6. Clean or replace the fuel cap. 7. Replace fuel filter. 8. Contact Authorized Service Dealer.
Engine overheats.	1. Engine load is excessive. 2. Oil level in crankcase is low. 3. Cooling fins and air passages under engine blower housing are plugged.	1. Reduce ground speed. 2. Add oil to crankcase. 3. Remove obstruction from cooling fins and air passages.

Problem	Possible Causes	Corrective Action
Abnormal vibration.	1. Engine mounting bolts are loose. 2. Loose engine pulley, idler pulley, or blade pulley. 3. Engine pulley is damaged.	1. Tighten engine mounting bolts. 2. Tighten the appropriate pulley. 3. Contact Authorized Service Dealer.
Machine does not drive.	1. Drive control is in “PUSH” position. 2. Traction belt is worn, loose or broken. 3. Traction belt is off pulley.	1. Move drive control to “OPERATE” position. 2. Contact Authorized Service Dealer. 3. Contact Authorized Service Dealer.

TORO®