Form No. 3324–710

312–8, 314–8 Garden Tractor

Wheel Horse® Classic Garden Tractor

Model No. 73429–210000001 and Up
Model No. 73449–210000001 and Up

Parts Catalog

Ordering Replacement Parts

To order replacement parts, please supply: the part number, the quantity, and the description of each part desired.

Understanding Reference Numbers

Each identified part in an illustration has a reference number. The reference number for a part also appears in the parts list, along with other information about the part.

This catalog uses two special reference number formats, one to indicate parts in a service assembly and another to indicate the quantity of a given part in an illustration.

Service Assembly Reference Numbers

Parts in service assemblies have reference numbers in the form **a:b.** The **a** represents the reference number of the entire service assembly and the **b** represents a sequential number unique to each part within the service assembly.

For example, a wheel assembly might be identified by reference number **6**, the tire by **6:1**, the valve by **6:2**, and the wheel by **6:3**. When you order the assembly identified by reference number 6, you receive all parts identified by reference numbers 6:1, 6:2, and 6:3. However, you may also order any part individually.

Reference numbers of this type appear in illustrations and in part lists.

Reference Numbers Indicating Quantity

In an illustration, if a reference number indicates more than one part, the reference number has the form **nX y.** The **n** represents the quantity of the part, the **X** is the multiplication symbol, and the **y** represents the reference number.

For example, in an illustration, the reference number **2X 37** means that two of the parts identified by reference number 37 are indicated.

© The TORO Company — 2001
All Rights Reserved

Contents

Description	Page
Hood Assembly	3
Frame, Axle And Steering System	4
Hoodstand, Console Assembly	5
Hoodstand, Console Assembly (continued)	6
Footrest And Hoodstand Side Covers Assembly	7
Gauges, Warning Lights And Controls Assembly	8
Manual Lift System Assembly	9
Clutch System Assembly	10
Brake System Assembly	11
Fender , Seat And Tail Lights/Reflectors Assembly	12
PTO Clutch And Cover Assembly	13
PTO Clutch System And Belt Guide Assembly	14
Engine Assembly	15
Transaxle Assembly	16
Wheels Assembly	17
Hitch Assembly	18
Battery Assembly	19
Fuel Tank Assembly	20
Hoodstand Electrical Mounting Assembly	21
Transmission 8–Speed 4 Pinion (Model 73429 Only)	22
Transmission 8–Speed 4 Pinion (continued) (Model 73429 Only)	23
Transmission 8–Speed 8 Pinion (Model 73449 Only)	24
Transmission 8–Speed 8 Pinion (continued) (Model 73449 Only)	25
Electrical Schematic (Model 73429 Only)	26
Electrical Schematic (Model 73449 Only)	27
Crankshaft (Model 73429 Only)	28
Crankcase (Model 73429 Only)	29
Oil Pan / Lubrication (Model 73429 Only)	30
Cylinder Head / Valve And Breather (Model 73429 Only)	31
Ignition / Electrical (Model 73429 Only)	32
Blower Housing And Baffles (Model 73429 Only)	33
Starter (Model 73429 Only)	34
Carburetor And Fuel Pump (Model 73429 Only)	35
Engine Controls (Model 73429 Only)	36
Air Intake / Filtration (Model 73429 Only)	37
Exhaust (Model 73429 Only)	38
Crankshaft (Model 73449 Only)	39
Crankcase (Model 73449 Only)	40
Oil Pan / Lubrication (Model 73449 Only)	41
Cylinder Head / Valve And Breather (Model 73449 Only)	42
Ignition / Electrical (Model 73449 Only)	43
Blower Housing And Baffles (Model 73449 Only)	44
Starter (Model 73449 Only)	45
Carburetor & Fuel Pump (Model 73449 Only)	46
Engine Controls (Model 73449 Only)	47
Air Intake / Filtration (Model 73449 Only)	48
Exhaust (Model 73449 Only)	49
Maintenance	50–51

Accessories

Description	Model / Part No.
36” Rear Discharge Mower	Model No. 78305
37” Side Discharge Mower (Model No. 73429 Only)	Model No. 78315
42” Side Discharge Mower	Model No. 78345
48” Side Discharge Mower (Model No. 73449 Only)	Model No. 78361
42” Rear Discharge Mower	Model No. 78350
42” Recycler Mower	Model No. 78355
48” Side Discharge Mower (Model No. 73429 Only)	Model No. 73361
48” Recycler Mower (Model No. 73449 Only)	Model No. 73365

Part Description Abbreviations

Part descriptions in this catalog may include the following abbreviations.

Abbreviation	Meaning
AR	as required
ASM	assembly
CARR	carriage
DEG	degrees
FH	flat head
GA	gauge
HF	hex flange
HH	hex head
HHF	hex head flange
HLH	hex lag head
HJ	hex jam
HOC	height-of-cut
HS	hex socket
HSBH	hex socket button head
HSFH	hex socket flat head
HSH	hex socket head
HWH	hex washer head
HWHTF	hex washer head thread forming
INC	incorporated
LH	left hand
NI	nylon insert
PPH	Phillips pan head
PTH	Phillips truss head
PTO	power take off
RH	right hand
SFH	slotted fillister head
SHH	slotted hex head
SQH	square head
SHWH	slotted hex washer head
SPH	slotted pan head
SRH	slotted round head
STD	standard
TAP	self tapping
TTH	Torx truss head
WH	wing head

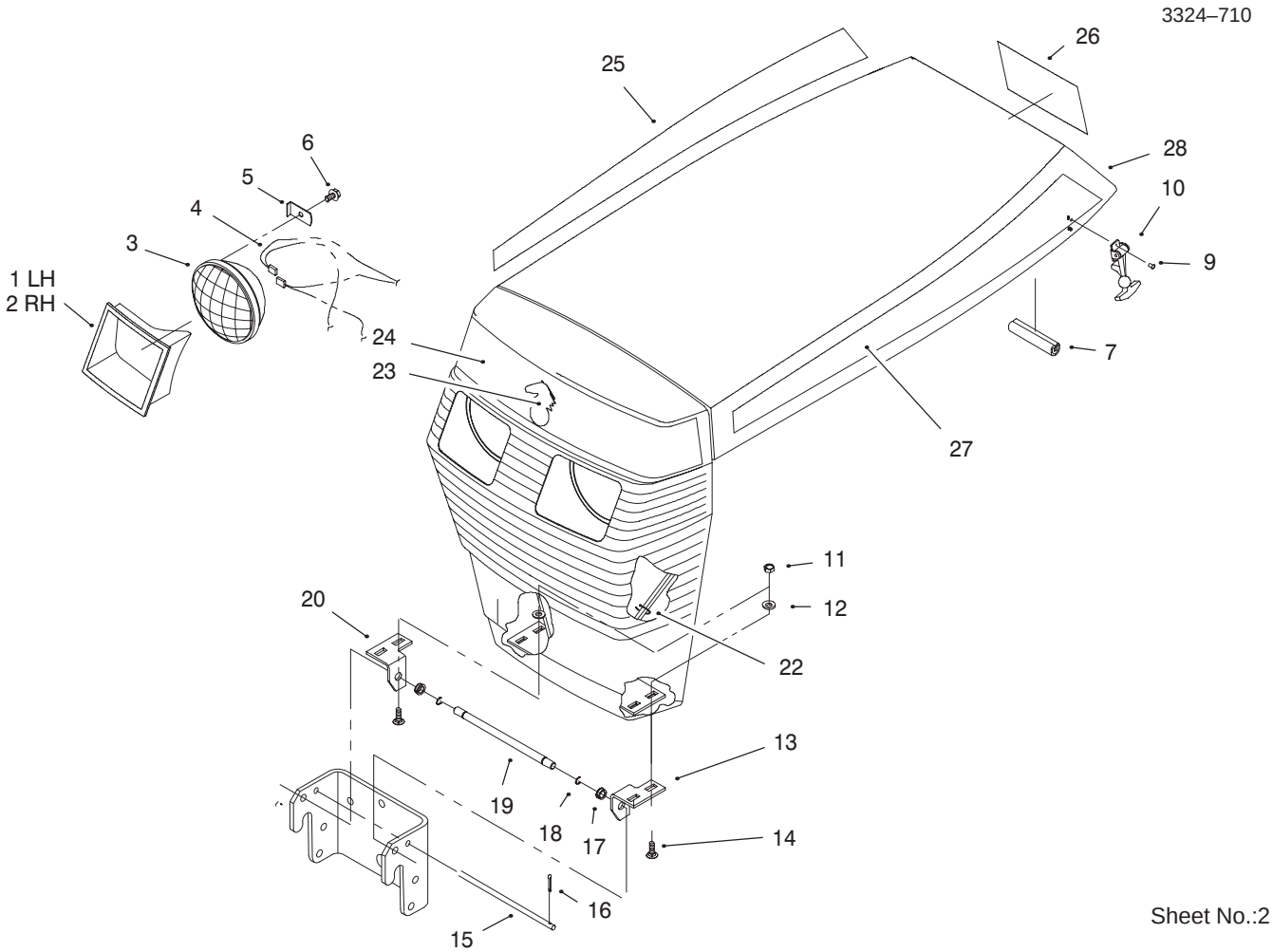

Hood Assembly

Ref. No.	Part No.	Qty.	Description
1	109495	1	Bezel–LH Headlight
2	109494	1	Bezel–RH Headlight
3	102881	2	Headlamp Ge 4411–1
4	95–7679	1	Harness – Headlight
5	109459	2	Lock–Headlight
6	9266714	2	Screw–HWH
7	111757	1	Edging–Console
9	117432	4	Rivet–Pop
10	117344	2	Handle ASM
11	3296–42	4	Nut–Lock, NI
12	3256–22	4	Washer–Flat
13	116747	1	Bracket–Grill L.h
14	3229–25	4	Screw–CARR
15	101850	1	Rod–Hood Stop
16	3272–1	2	Pin–Cotter
17	5979	2	Bushing–Nyliner
18	105797	2	Ring–Retaining
19	116745	1	Rod–Grill Pivot
20	116746	1	Bracket–Grill R.h
22	3290–378	1	Tie–Cable
23	94–3736	1	Logo – Horsehead
24	92–9826	1	Decal – Frt Hood Top
25	92–9825	1	Decal – RH Hood Top
26	98–0750	1	Decal – Danger Hood
27	92–9824	1	Decal – LH Hood Top

Ref. No.	Part No.	Qty.	Description
28	112358–01	1	Hood

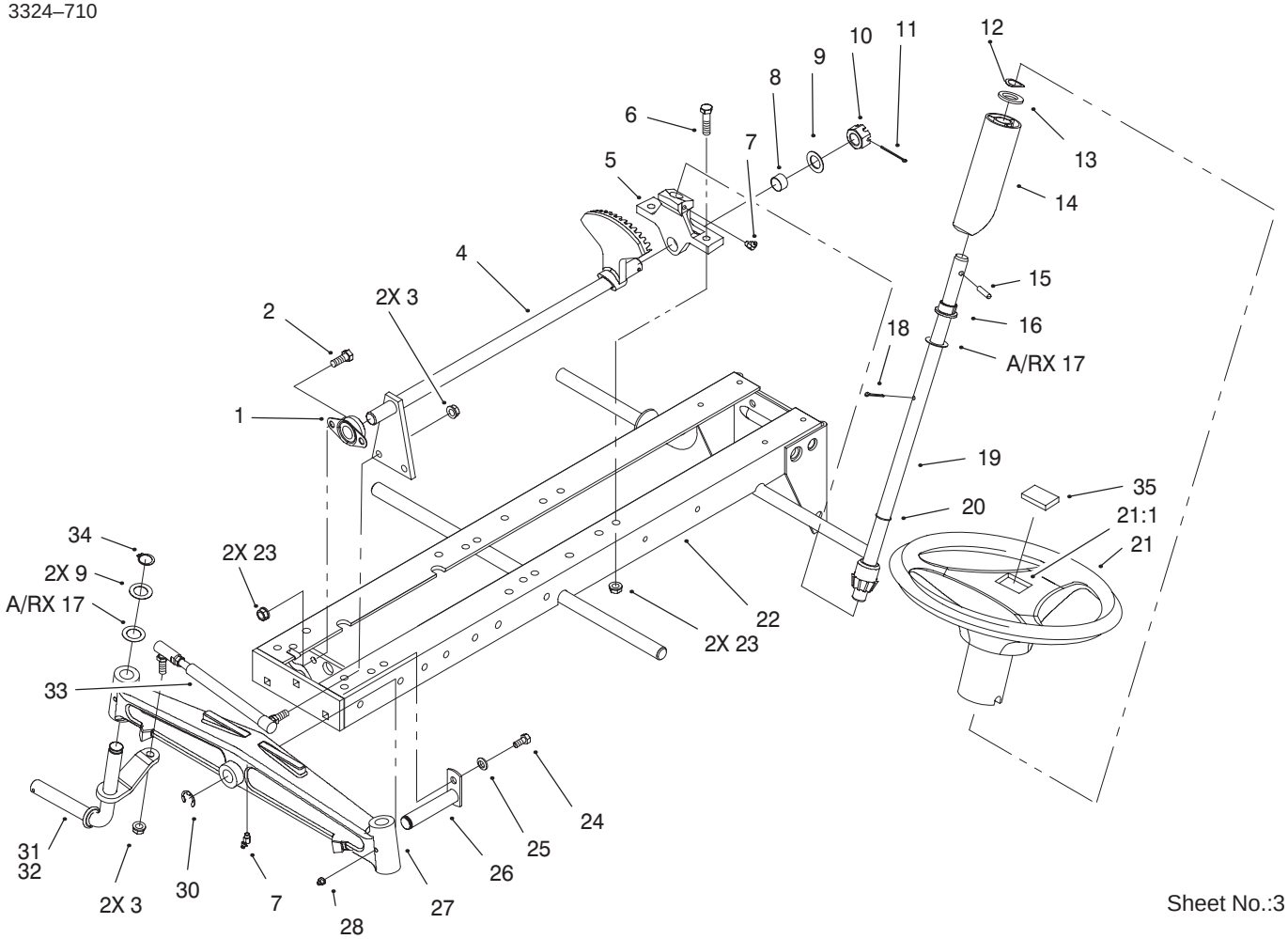

Sheet No.:3

Frame, Axle And Steering System

Ref. No.	Part No.	Qty.	Description
1	6472	1	Bearing–Flanged
2	323–6	2	Screw–HH
3	3296–6	4	Nut–Lock, NI
4	78–2880–03	1	Lower Steering ASM
5	88–2710–03	1	Support–Lower Steering
6	323–8	2	Screw–HH
7	302–11	2	Fitting–Lube, 45°
8	6397	1	Bearing–Bronze
9	1278	3	Washer
10	32136–5	1	Nut–Slotted
11	3272–19	1	Pin–Cotter
12	7896	1	Washer–Bowed
13	109262	2	Washer–Wheel
14	113443	1	Tube–Steering
15	32121–111	1	Pin–Roll
16	109189	1	Bearing–Flanged
17	5210	14	Washer–Shim
18	3272–21	1	Pin–Cotter
19	92–4987	1	Steering Shaft ASM
20	237–69	1	O–Ring
21	98–1473	1	Wheel–Steering, 15” Soft
21:1	98–1468	1	Cover–Wheel, Steering
22	94–6673–01	1	Frame ASM

Ref. No.	Part No.	Qty.	Description
23	3296–39	4	Nut–Lock, NI
24	322–1	1	Screw–HH
25	3253–4	1	Washer–Lock
26	6216	1	Pin & Plate ASM
27	5638–01	1	Axle–Front
28	302–5	2	Fitting–Grease
30	5618	1	E–Ring
31	113379–01	1	LH Spindle ASM (only on: 73429)
31	113382–01	1	RH Spindle ASM (only on: 73449)
32	113380–01	1	RH Spindle ASM (only on: 73429)
32	113381–01	1	LH Spindle ASM (only on: 73449)
33	78–2900–01	2	Tie Rod ASM
34	32120–93	2	Ring–Retaining
35	98–1459	1	Decal–Toro

3324–710

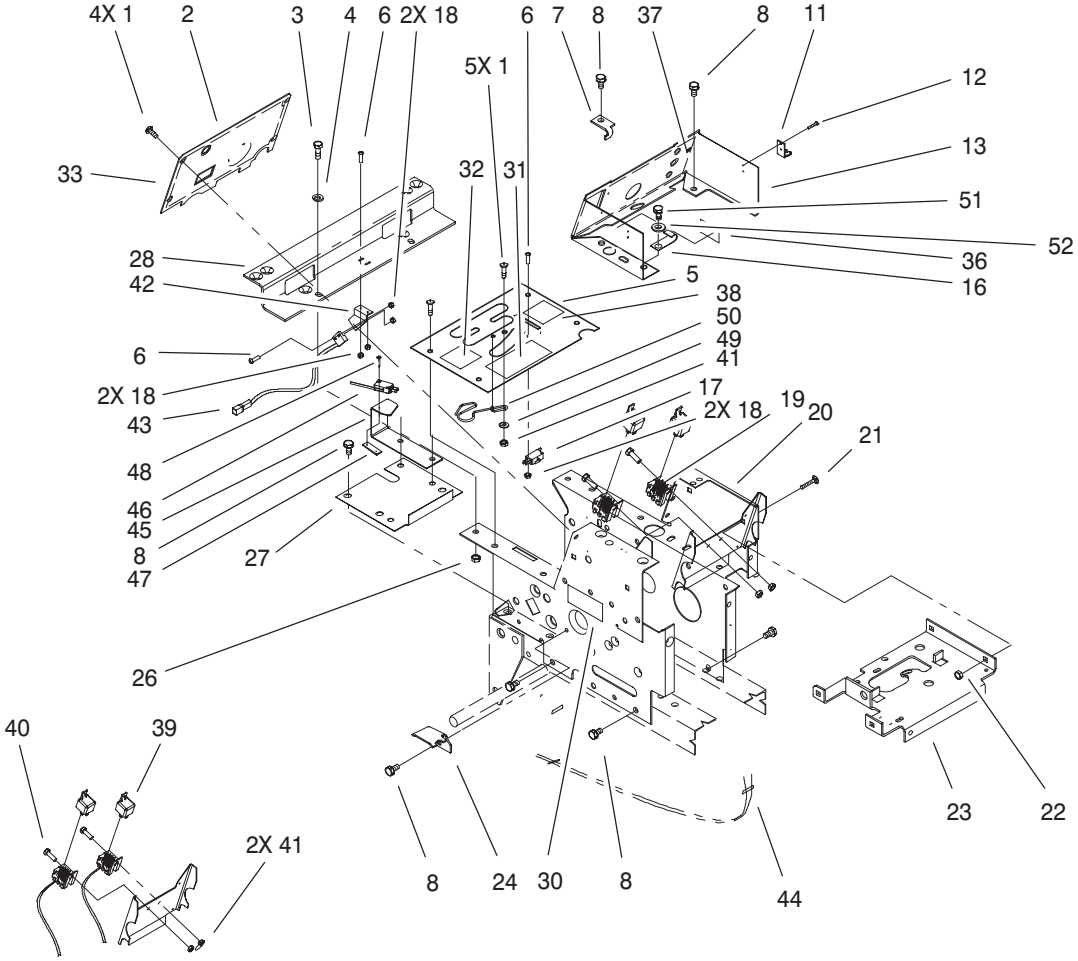

Sheet No.:4

Hoodstand, Console Assembly

Ref. No.	Part No.	Qty.	Description
1	9108372	9	Screw–Phc
2	95–7674–03	1	Plate–Hoodstand (only on: 73429)
2	95–7675–03	1	Plate–Hoodstand (only on: 73449)
3	322–5	2	Screw–HH
4	3256–23	2	Washer–Flat
5	99–8026–03	1	Plate–Shift
6	9109484	6	Screw–Pchr
7	112415	1	Stop–PTO
8	32144–14	10	Screw–HWH
11	117343	2	Keeper–Latch
12	117432	4	Rivet–Pop (only on: 73429)
13	99–3669–03	1	Console (only on: 73429)
13	95–7670–03	1	Console (only on: 73449)
16	111392	1	J–Clip
17	111332	1	Switch
18	9157324	6	Nut–Hex
19	107069	4	Clip
20	95–7676–03	1	Hoodstand ASM
21	116000	4	Bolt–CARR
22	3296–29	4	Nut–Lock

Ref. No.	Part No.	Qty.	Description
23	78–3010–03	1	Suport–Battery
24	88–2170–03	1	Brket–Blt Spt
26	3296–29	2	Nut–Lock
27	106250–03	1	Cover–Dust
28	95–7665–03	1	Bracket–Fender
30	92–9829	2	Decal – Model 314–8 (only on: 73449)
30	92–9828	2	Decal – Model 312–8 (only on: 73429)
31	92–8946	1	Decal – Danger
32	111534	1	Decal Shift Pattern
33	98–0674	1	Decal – Dash, Lower (only on: 73429)
33	98–0675	1	Decal – Dash, Lower (only on: 73449)
36	111926	1	Decal Elect System
37	99–5341	1	Decal–Console (only on: 73449)
37	99–5342	1	Decal–Console (only on: 73429)
38	111510	1	Decal–Parking–Brake
39	98–7249	2	Relay
40	3234–33	2	Screw–HHF
41	3296–42	3	Nut–Lock, NI
42	95–7666	1	Brkt–Switch, Reed

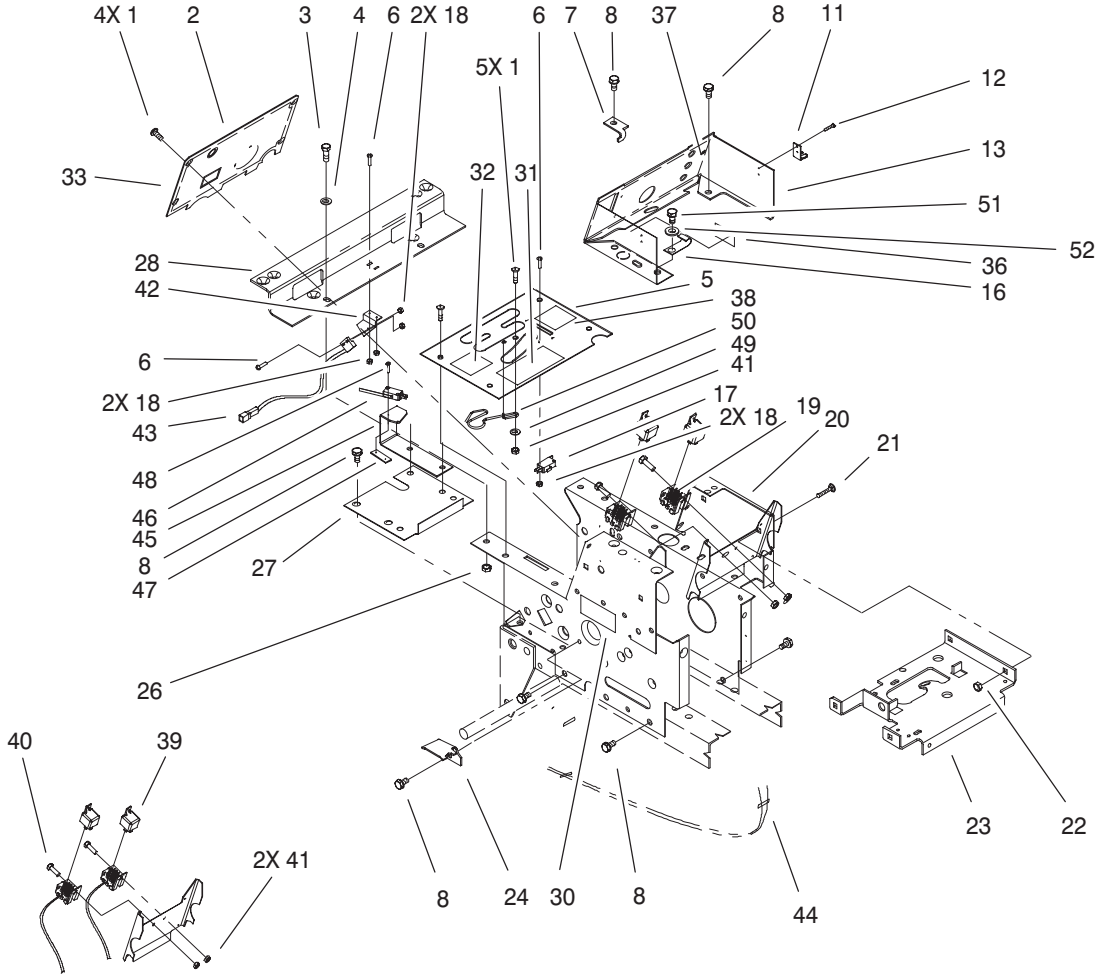

Sheet No.:4

Hoodstand, Console Assembly (continued)

Ref. No.	Part No.	Qty.	Description
43	95–7669	1	Switch–,Reed, Magnetic
44	3290–378	2	Tie–Cable
45	99–8049–03	1	Bracket–Switch, Reverse
46	88–9931	1	Switch–Micro
47	3290–354	1	Nut–Speed
48	147665	2	Screw–HH
49	3256–22	1	Washer–Flat
50	99–8028	1	Spring–Shift Control
51	9266974	1	Screw–Thr'd Form
52	3256–4	1	Washer–Flat

Ref. No.	Part No.	Qty.	Description

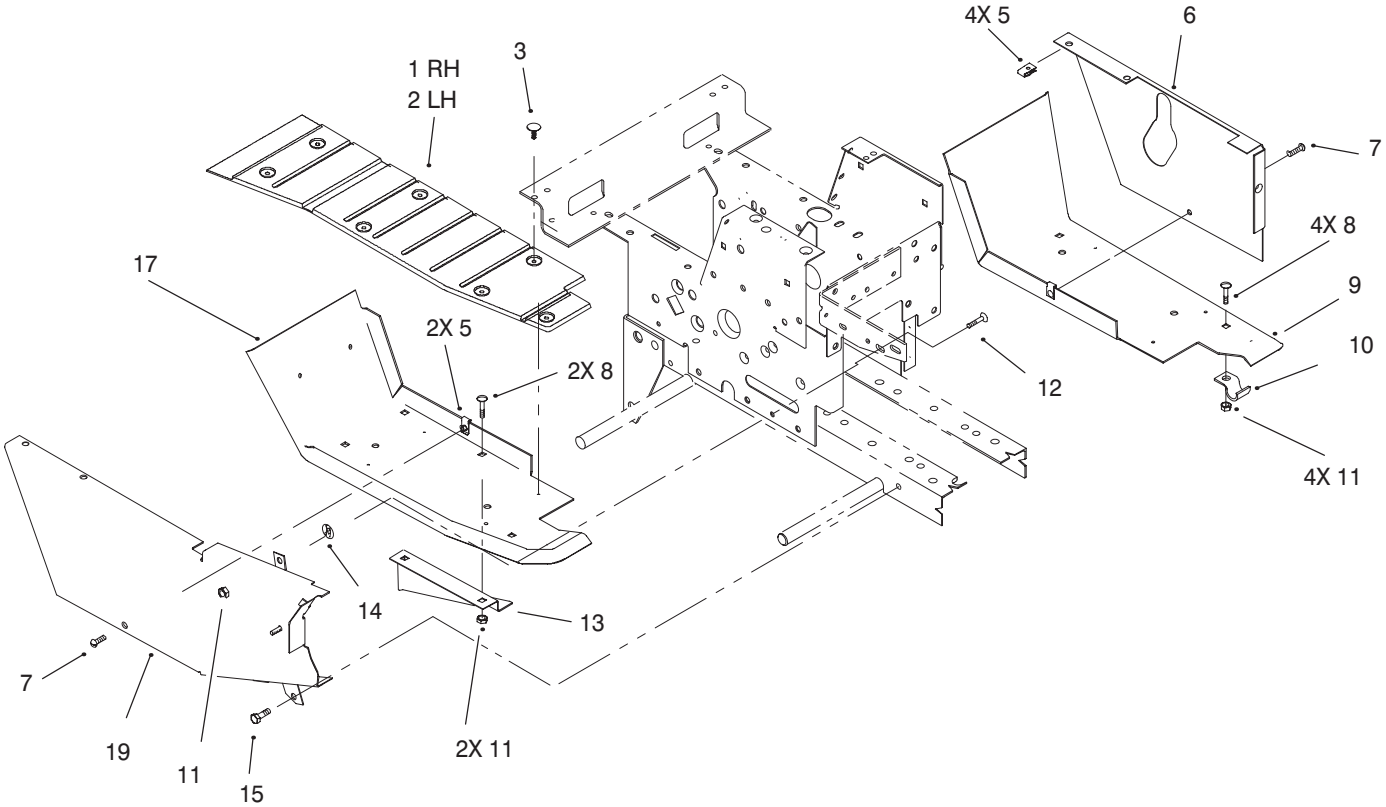

Sheet No.:5

Footrest And Hoodstand Side Covers Assembly

Ref. No.	Part No.	Qty.	Description
1	94–3710	1	Pad – Foot
2	94–3712	1	Pad – Foot
3	3290–479	16	Fastener–Panel
5	107069	6	Clip
6	113935–01	1	Cover–L.h.
7	9108372	2	Screw–Phc
8	116000	6	Bolt–CARR
9	94–3522–01	1	Footrest–LH
10	7456	4	Bracket
11	3296–29	7	Nut–Lock
12	3230–1	1	Screw–CARR
13	106352–01	1	Guide–Lower Blt
14	108457	1	Nut–Push
15	32144–14	1	Screw–HWH
17	94–3521–01	1	Footrest–RH
19	95–7695–01	1	Single Belt Guard ASM

Ref. No.	Part No.	Qty.	Description

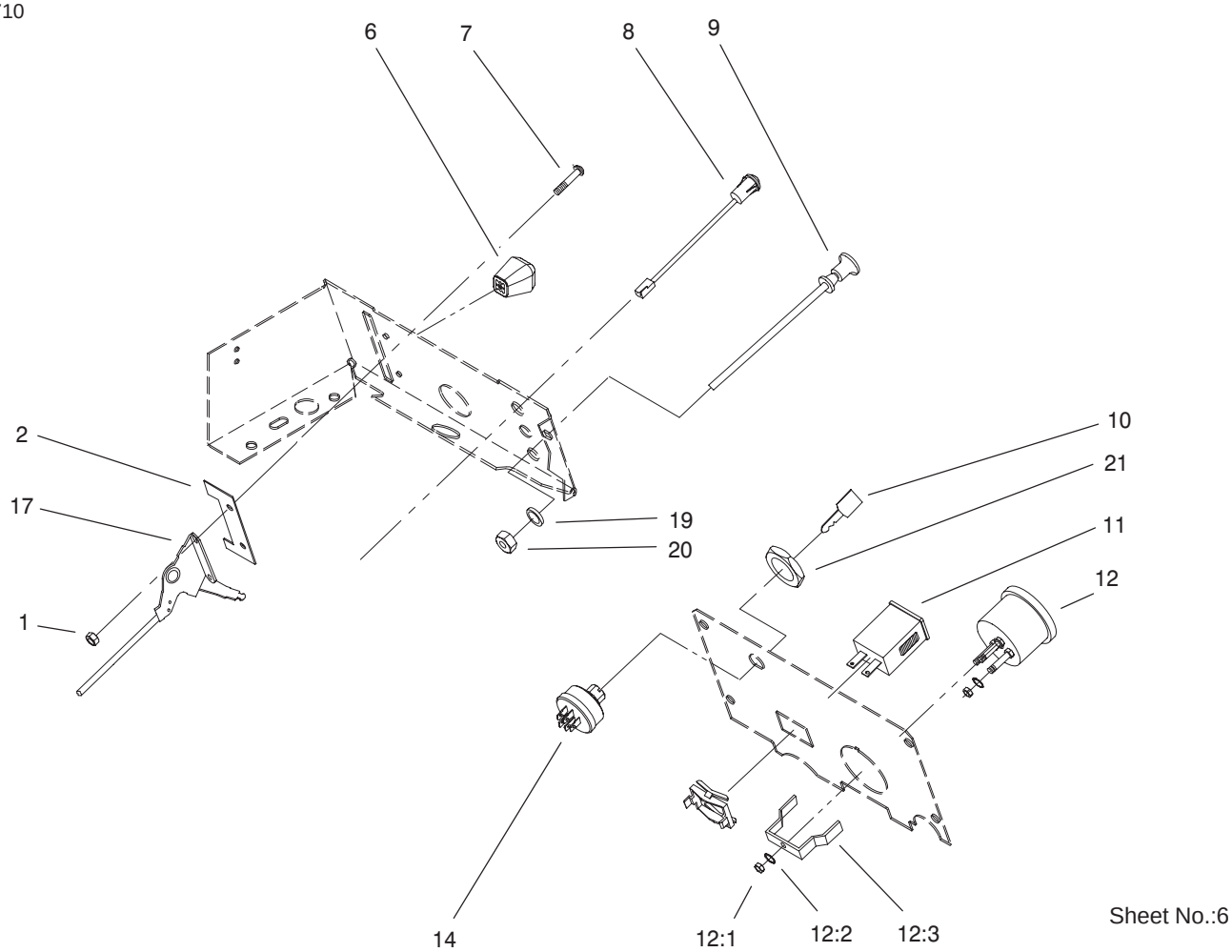

Gauges, Warning Lights And Controls Assembly

Ref. No.	Part No.	Qty.	Description
1	3296–2	2	Nut–Lock
2	120590–03	1	Stop–Throttle
6	66–0120	1	Knob
7	9107922	2	Scrw–Phcr
8	95–7652	3	Light – Indicator (only on: 73449)
8	95–7652	1	Light – Indicator (only on: 73429)
9	95–7656	1	Choke Control ASM
10	62–7770	1	Key–Ignition
11	94–4208	1	Hourmeter
12	79–0060	1	Voltmeter (only on: 73449)
12:1	3217–27	1	Nut–Hex (only on: 73449)
12:2	3255–25	1	Washer–Lock (only on: 73449)
12:3	78–0080	1	Clamp–Mounting (only on: 73449)
14	92–6785	1	Switch – Ignition
17	95–7657	1	Throttle Control ASM
19	3256–37	1	Washer–Flat
20	109530	1	Nut–Hex Palnut
21	700919	1	Nut

Ref. No.	Part No.	Qty.	Description

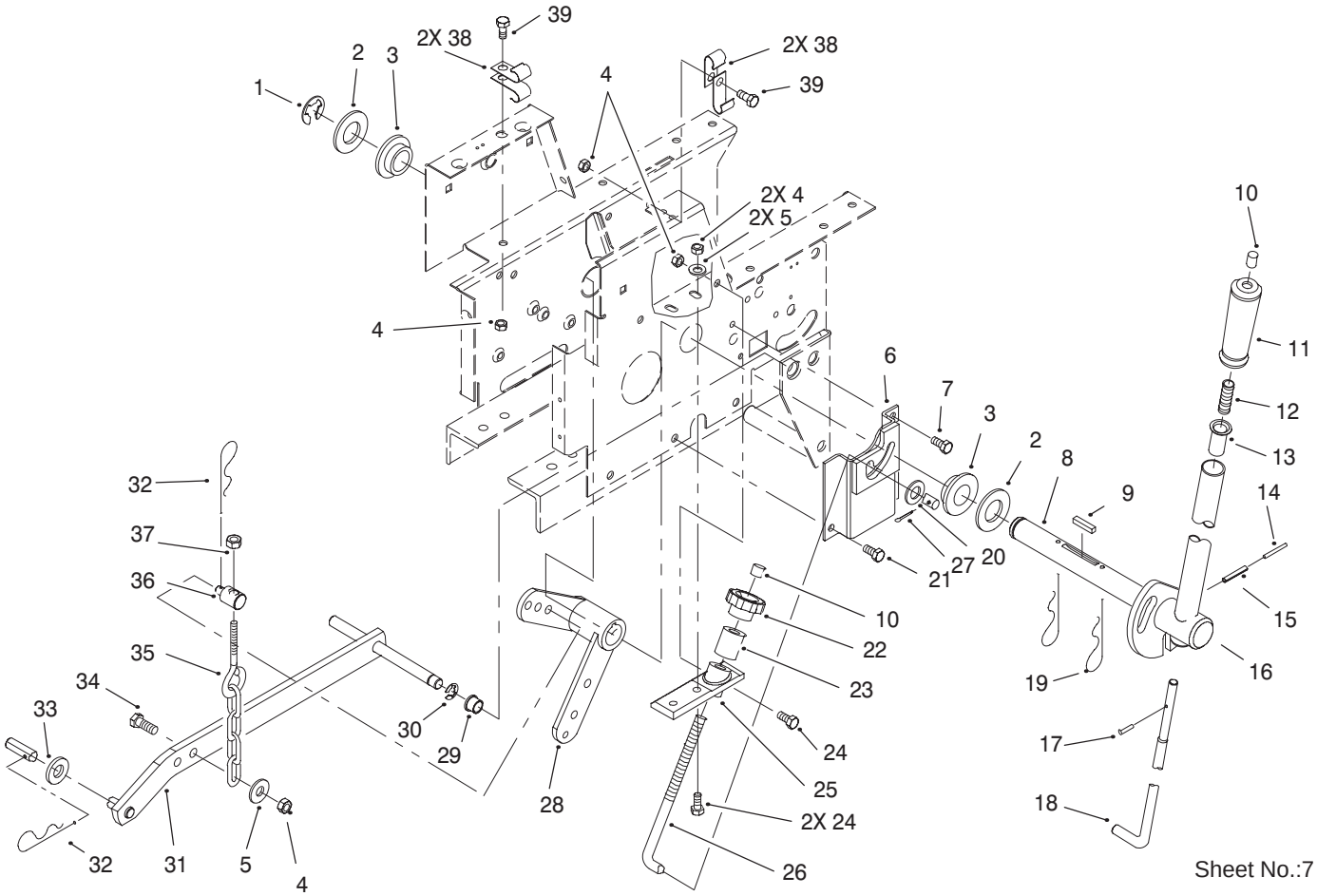

Manual Lift System Assembly

Ref. No.	Part No.	Qty.	Description
1	32151–91	1	Ring–Retaining
2	3256–62	2	Washer–Flat
3	106269	2	Bearing–Flange
4	3296–29	6	Nut–Lock
5	3256–23	3	Washer–Flat
6	106411–03	1	Lift Lever ASM
7	32144–14	1	Screw–HWH
8	108565	1	Shaft–Lift Lever
9	1121	1	Key–Square
10	105316	2	Cap–Plunger Rod
11	92–6710	1	Grip – Handle
12	3624	1	Spring–Compression
13	8130	1	Retainer–Spring
14	32121–103	1	Pin–Spring
15	32121–25	1	Pin–Roll
16	108563–03	1	Lift Handle ASM
17	933148	1	Pin–Spirol
18	106257	1	Rod–Latch Lift Le
19	9335074	2	Pin–Hair
20	3256–5	1	Washer–Flat
21	9266974	2	Screw–Thr'd Form
22	5280	1	Knob–Lift Control
23	106258–03	1	Slev–Lift Adjs
24	322–5	3	Screw–HH
25	106345–03	1	Casting–Lift Leve
26	110653	1	Rod–Height Control

Ref. No.	Part No.	Qty.	Description
27	3272–10	1	Pin–Cotter
28	78–1550	1	Lift Lever ASM
29	6229	1	Bearing
30	32120–47	1	Ring–Retaining
31	113445–03	1	Lift Bar ASM
32	9335054	2	Pin–Hair
33	3256–26	1	Washer–Flat
34	322–6	1	Screw–HH
35	106522	1	Chain–Lift
36	6739	1	Stud–Lift
37	3296–39	1	Nut–Lock, NI
38	8830	4	Clip
39	322–2	2	Screw–HH

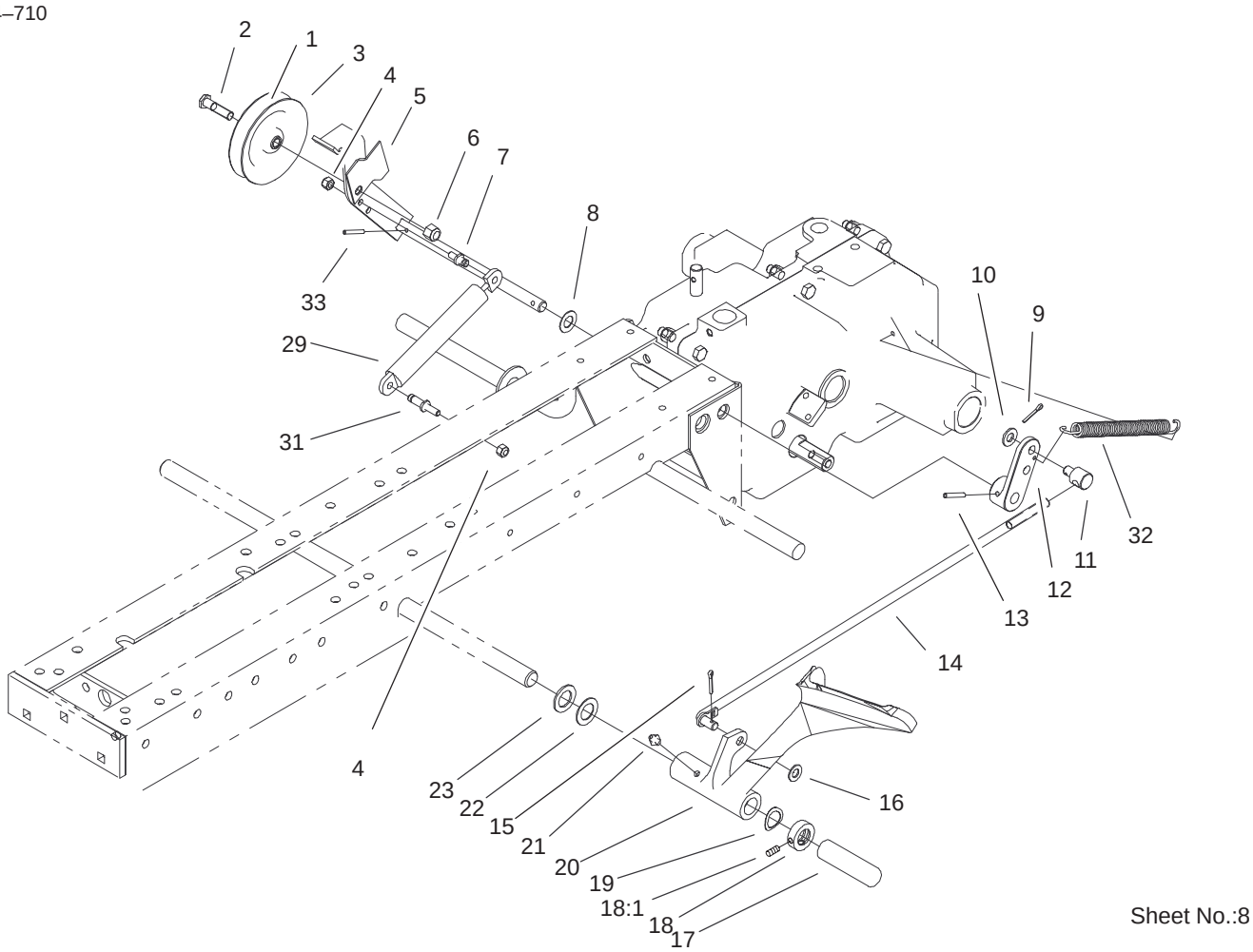

Clutch System Assembly

Ref. No.	Part No.	Qty.	Description
1	93–9808	1	Belt – V
2	106193	1	Bolt–Special Hex
3	95–7668	1	Pulley – V, Idler
4	3296–42	2	Nut–Lock, NI
5	98–1746	1	Idlr Arm ASM
6	32146–2	1	Nut–Lock, NI
7	104–5093	1	Pin–Damper, Clutch Arm
8	3765	1	Shim–Washer
9	3272–6	1	Pin–Cotter
10	3256–24	1	Washer–Flat
11	101161	1	Trunion
12	105896–03	1	Arm–Clutch Rod
13	933190	1	Pin–Spirol
14	103347	1	Rod & Guide ASM
15	3272–10	1	Pin–Cotter
16	920248	1	Washer–Nylon
17	94–6683	1	Sleeve – Protective
18	111383	1	Collar
18:1	3245–32	1	Screw–HS
19	7896	1	Washer–Bowed
20	94–3703–01	1	Pedal–Brake, Clutch
21	302–5	1	Fitting–Grease
22	1278	1	Washer
23	9202254	1	Washer
29	100–8732	1	Damper–Gas

Ref. No.	Part No.	Qty.	Description
31	104–5094	1	Pin–Damper, Classic Frame
32	108035	1	Spring–Clutch
33	933267	1	Pin–Spirol

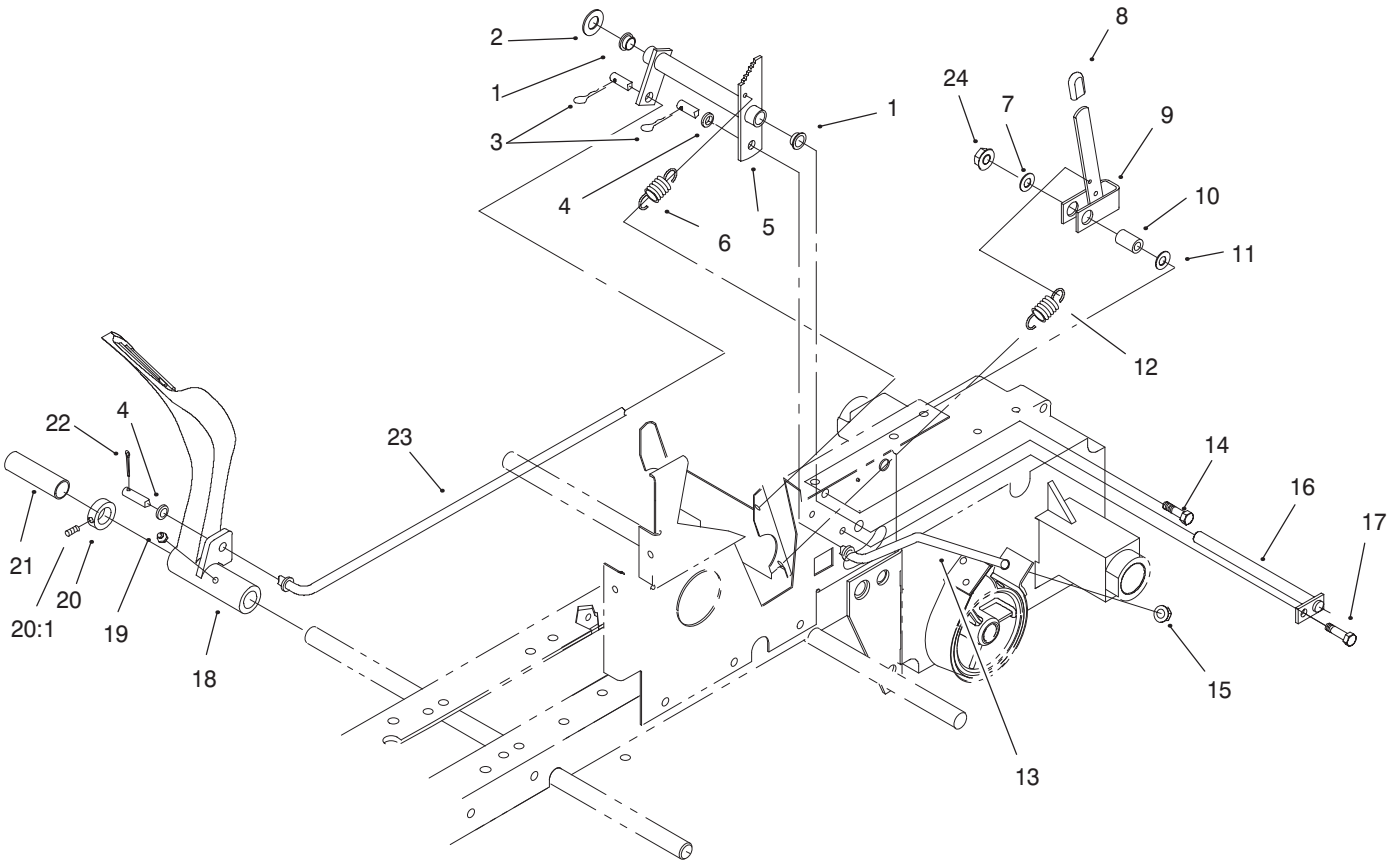

Sheet No.:9

Brake System Assembly

Ref. No.	Part No.	Qty.	Description
1	7879	2	Bushing–Flanged
2	3256–26	1	Washer–Flat
3	9335054	2	Pin–Hair
4	920248	2	Washer–Nylon
5	103543–03	1	Belcrank ASM
6	103628	1	Spring–Extension
7	3256–24	1	Washer–Flat
8	6820	1	Grip
9	106451–03	1	Brake Lever ASM
10	102025	1	Spacer
11	3256–24	1	Washer–Flat
12	107677	1	Spring–Brake
13	105900	1	Rod–Rear Brake
14	323–9	1	Screw–HH
15	3296–39	1	Nut–Lock, NI
16	106417	1	Rod ASM
17	32144–14	1	Screw–HWH
18	94–3706–01	1	Pedal–Brake, Gear
19	302–5	1	Fitting–Grease
20	111383	1	Collar
20:1	3245–32	1	Screw–HS
21	94–6683	1	Sleeve – Protective
22	3272–10	1	Pin–Cotter
23	92–6849	1	Rod – Brake
24	3296–39	1	Nut–Lock, NI

Ref. No.	Part No.	Qty.	Description

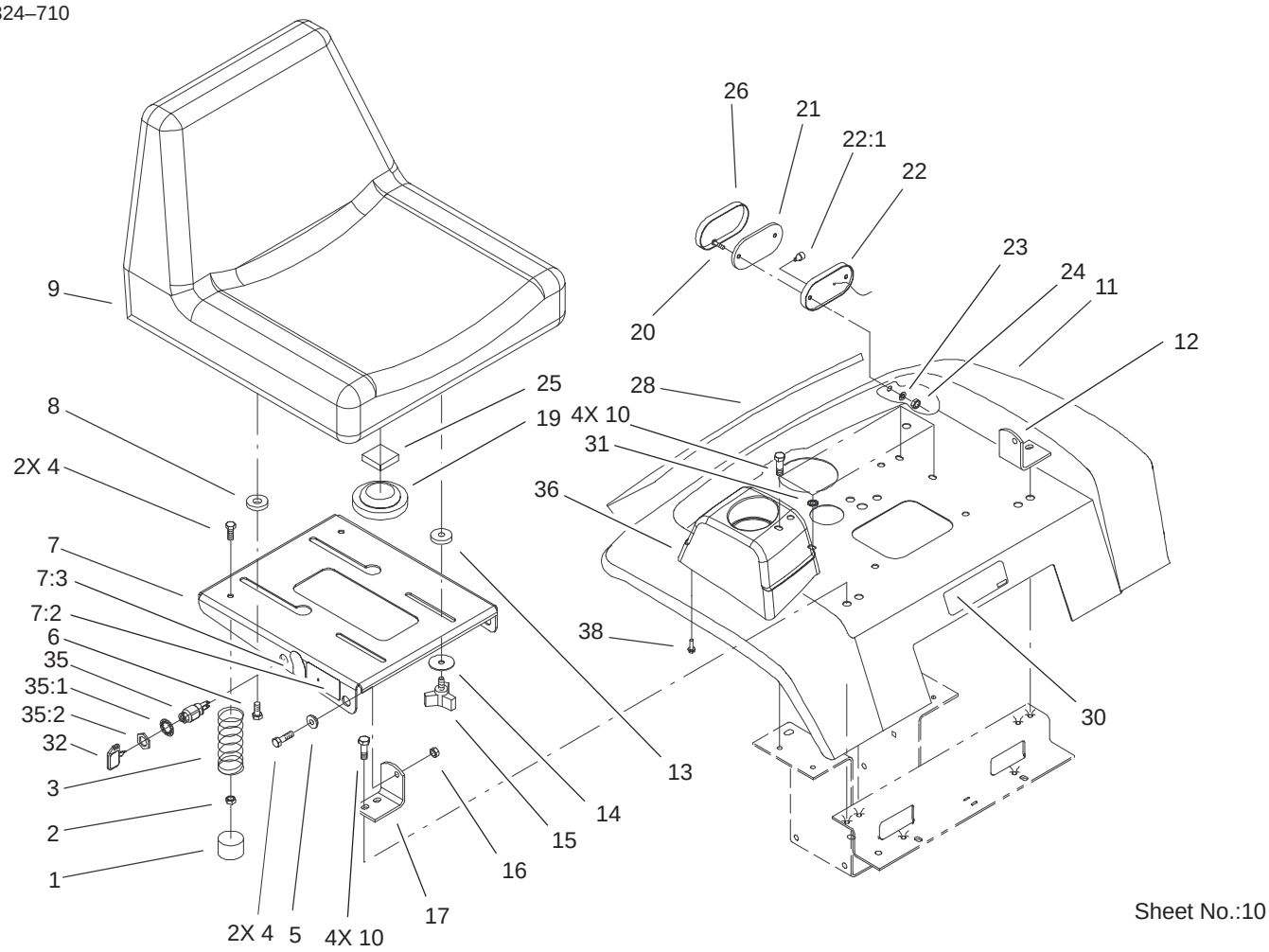

Sheet No.:10

Fender , Seat And Tail Lights/Reflectors Assembly

Ref. No.	Part No.	Qty.	Description
1	701178	2	Cap–Protector
2	3296–58	2	Nut–Lock NI
3	92–7054	2	Spring – Compression
4	322–4	4	Screw–HH
5	105503	2	Bushing
6	92–6986	2	Bolt – Shoulder
7	104–5027	1	Support Seat ASM
7:2	99–2985	1	Decal–Danger
7:3	99–5339	1	Decal
8	92–6750	2	Spacer – Nylon
9	104–2463	1	Seat–High Back
10	32144–14	8	Screw–HWH
11	104–5077–01	1	Fender
12	79–0970–03	1	Bracket–Pivot LH
13	109989	2	Spacer–Nylon
14	94–2869	2	Washer
15	700806	2	Knob
16	3296–29	2	Nut–Lock
17	79–0950–03	1	Bracket–Pivot, RH
19	100–3524	1	Switch–Seat
20	3250–31	4	Screw–PPH
21	108547	2	Reflector (only on: 73429)
22	105202	2	Base–Taillight (only on: 73449)
22:1	109045	2	Bulb (only on: 73449)

Ref. No.	Part No.	Qty.	Description
23	3254–1	4	Washer–Lock/Int (only on: 73449)
24	3296–27	4	Nut–Lock NI
25	104–2488	1	Foam–Switch, Seat
26	112564	2	Lens–Tail Light (only on: 73449)
28	92–9827	1	Decal – Rear Fender
30	76–1340	1	Decal – USA
31	3255–8	1	Washer–Lock/Ext (only on: 73449)
32	62–7770	1	Key–Ignition
35	46–5780	1	Switch–Starter
35:1	3254–5	1	Washer–Lock, Internal
35:2	218–461	1	Nut–HH
36	104–0838	1	Holder–Cup
38	32144–20	4	Screw–Thread Forming

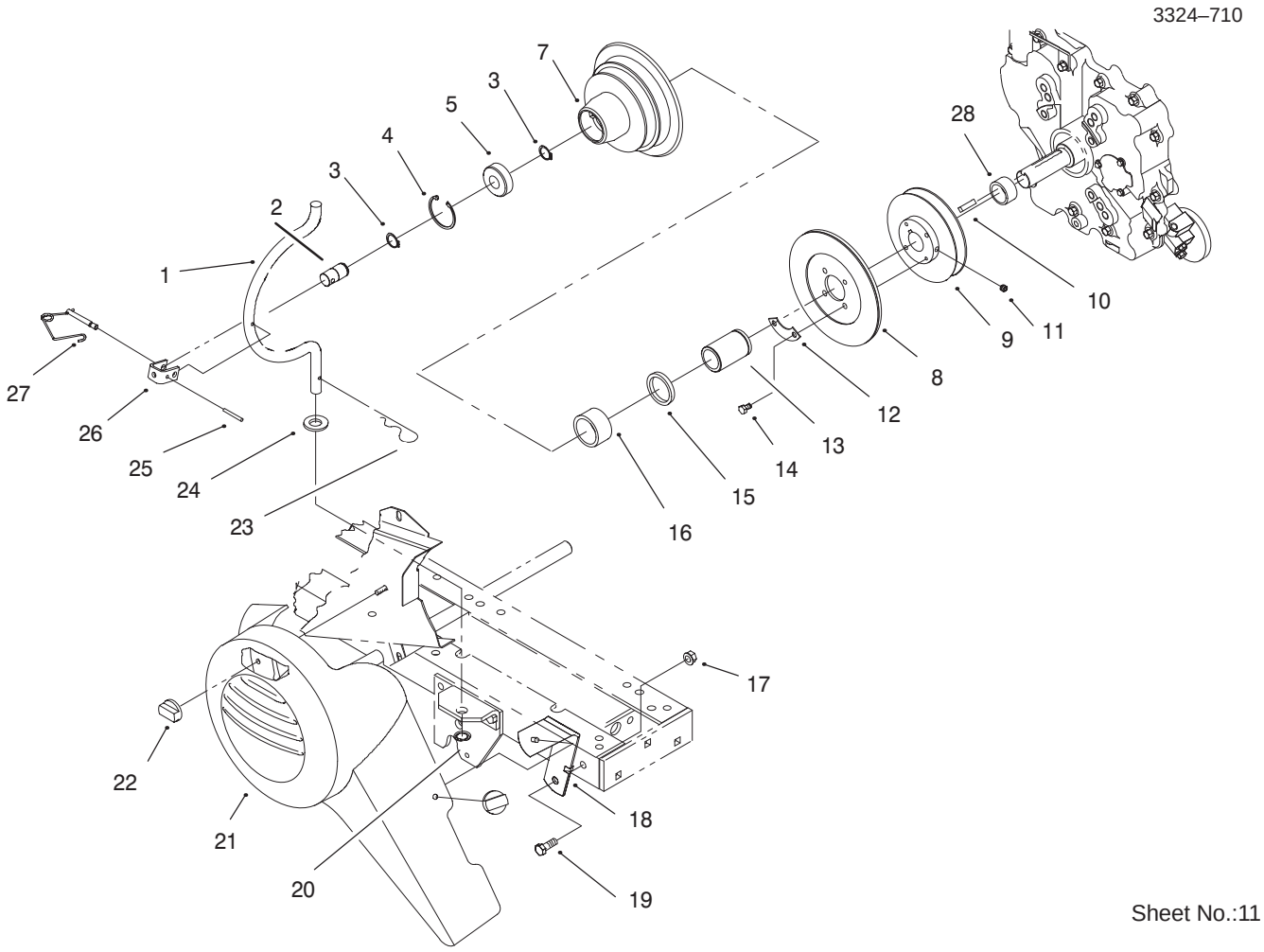

PTO Clutch And Cover Assembly

Ref. No.	Part No.	Qty.	Description
1	113108	1	Rod–Housing
2	102872	1	Shaft–PTO
3	32120–72	2	Ring–Snap
4	32120–62	1	Ring–Retaining
5	109842	1	Bearing–Ball
7	103478–01	1	Housing–Clutch
8	94–6650	1	Ass'y–Clutch Plate
9	7466	1	Pulley
10	105453	1	Key
11	3246–2	2	Setscrew–HSH
12	6659	2	Retainer
13	6658	1	Race–Bearing
14	9080026	4	Screw–Hex Hd Cap
15	6663	1	Seal–Oil
16	6662	1	Bearing–Needle
17	32128–40	1	Nut–Flange
18	94–3726–03	1	Belt Cover Brkt ASM
19	323–6	1	Screw–HH
20	106695	1	Ring–Reinforced Circ
21	94–3704	1	Guard – Belt
22	94–3735	2	Nut – Wing
23	9335064	1	Pin–Hair Cotter
24	3256–27	1	Washer–Flat
25	933274	1	Pin
26	113107	1	Clevis

Ref. No.	Part No.	Qty.	Description
27	111314	1	Locking Pin ASM
28	100–3549	1	Spacer–Crankshaft

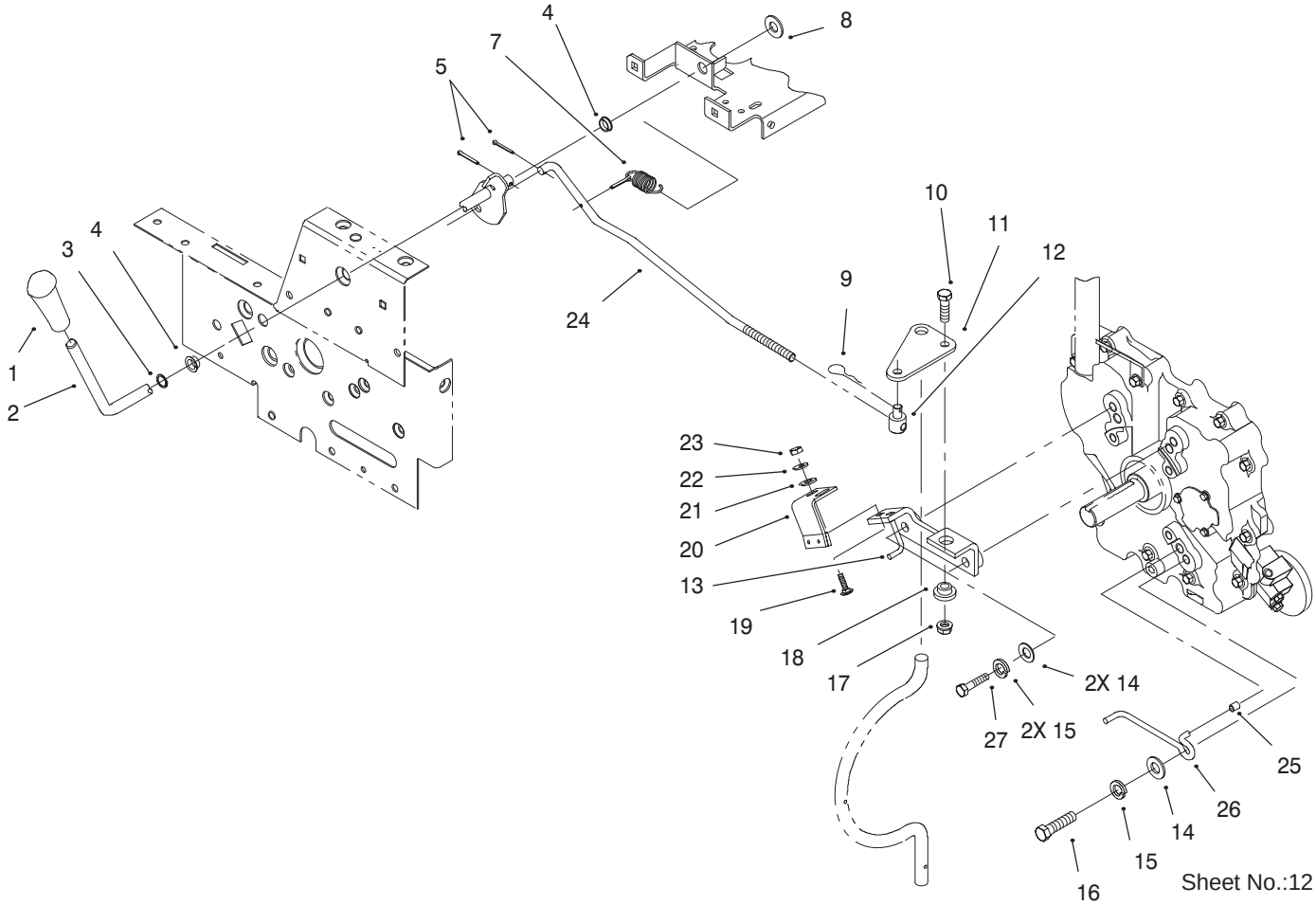

PTO Clutch System And Belt Guide Assembly

Ref. No.	Part No.	Qty.	Description
1	94–3727	1	Knob
2	94–3701	1	PTO Clutch Lever ASM
3	32151–11	1	Ring–Ext Grip
4	5666	2	Bushing–Nyliner
5	3272–10	2	Pin–Cotter
7	103125	1	Spring
8	3765	1	Shim–Washer
9	9335054	1	Pin–Hair
10	323–6	1	Screw–HH
11	110669	1	Plate
12	101161	1	Trunion
13	98–1742–03	1	Engine Brkt ASM
14	3256–25	3	Washer–Flat
15	3253–6	3	Washer–Lock
16	324–5	1	Screw–HH
17	3296–59	1	Nut–Lock NI
18	104859	1	Spacer–Lift Link
19	3229–25	2	Screw–CARR
20	94–6652	1	Brake ASM
21	3256–22	2	Washer–Flat
22	3253–3	2	Washer–Lock
23	3218–1	2	Nut–Jam
24	111052	1	Rod–PTO Clutch
25	112841	1	Cap
26	98–1700	1	Wire – Guide, Belt
27	324–7	2	Screw–HH

Ref. No.	Part No.	Qty.	Description

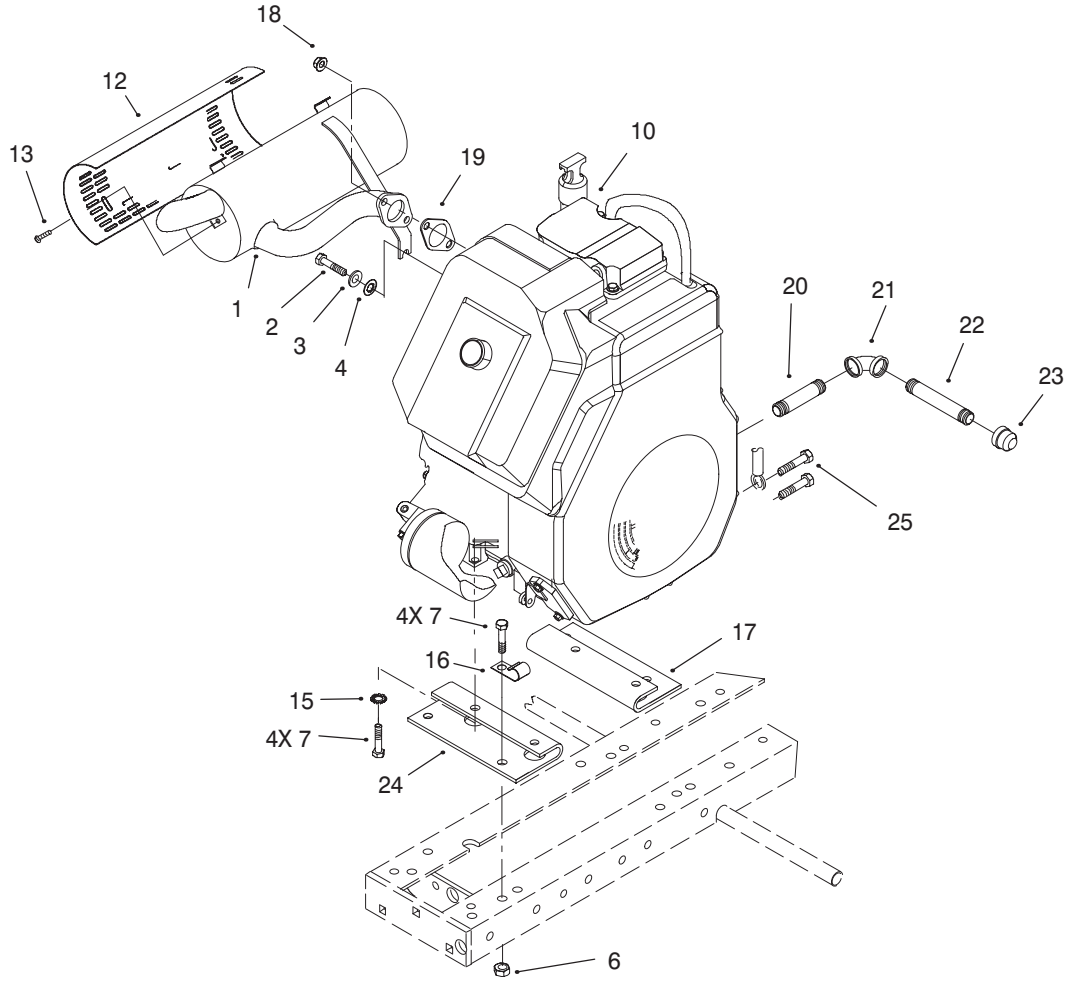

Sheet No.:13

Engine Assembly

Ref. No.	Part No.	Qty.	Description
1	95–7662	1	Muffler
2	24 086 45	1	Screw–HHF
3	3253–4	1	Washer–Lock
4	3256–23	1	Washer–Flat
6	3296–39	4	Nut–Lock, NI
7	323–6	8	Screw–HH
10	95–7680	1	Engine – 12 HP, Kohler Model Ch12.5–Ps–1935 (only on: 73429)
10	95–7681	1	Engine – 14 HP, Kohler Model Ch14–Ps–1838 (only on: 73449)
12	94–3738	1	Shield – Heat
13	9103312	4	Screw
15	3255–9	4	Washer–Lock/Ext
16	8830	1	Clip
17	98–1730–03	1	Brkt–Eng Mtg, Rear
18	92–6780	2	Nut–HF
19	92–6716	1	Gasket–Exhaust
20	289–51	1	Nipple
21	2811–16	1	Elbow–90 Degree
22	289–45	1	Nipple–Pipe
23	288–4	1	Cap–Pipe

Ref. No.	Part No.	Qty.	Description
24	98–1731–03	1	Brkt–Eng Mtg, Front
25	M–0839070	2	Screw–HHF

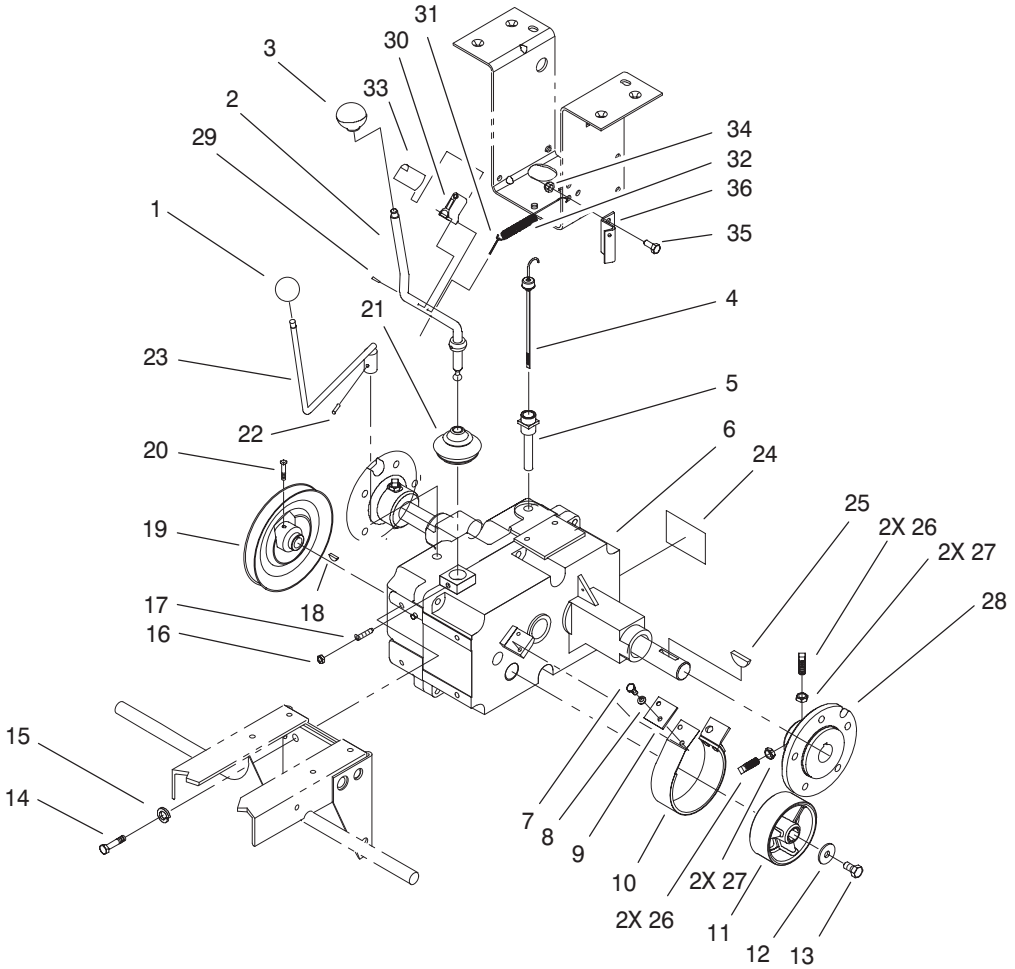

Sheet No.:14

Transaxle Assembly

Ref. No.	Part No.	Qty.	Description
1	83–2710	1	Knob
2	95–7684	1	Shift Rod ASM
3	108758	1	Knob
4	101847–03	1	Dipstick
5	102703	1	Nipple–Trans
6	94–6670	1	Transmission ASM 8 Spd 4 (only on: 73429)
6	94–6671	1	Transmission ASM 8 Spd 8 (only on: 73449)
7	321–3	2	Screw–HH
8	3253–3	2	Washer–Lock
9	94–6696–03	1	Plate–Brake
10	9593	1	Brake Band Assy
11	106719	1	Drum–Brake
12	2844	1	Washer
13	110234	1	Screw–Hex Hd Cap
14	323–5	4	Screw–HH
15	3253–21	4	Washer–Lock
16	3217–5	1	Nut–Hex
17	1239	1	Screw–Set
18	937221	1	Key–Hi Pro
19	106165	1	Pulley–Trans
20	3242–2	1	Screw–Sq. Hd.
21	3577	1	Cover–Dust

Ref. No.	Part No.	Qty.	Description
22	933184	1	Pin–Spirol
23	110727	1	Shift Rod ASM
24	94–1834	1	Decal – Unidrive
25	937108	2	Key–Woodruff
26	3243–5	4	Screw–Set
27	3218–3	4	Nut–Jam
28	105763–03	2	Hub–Wheel
29	32121–97	2	Pin
30	95–7683	1	Magnet Clip ASM
31	3272–6	1	Pin–Cotter
32	110769	1	Spring–Extension
33	98–1748	1	Shield – Magnet
34	3296–29	2	Nut–Lock
35	322–3	2	Screw–HH
36	99–8029–03	1	Bracket–Spring

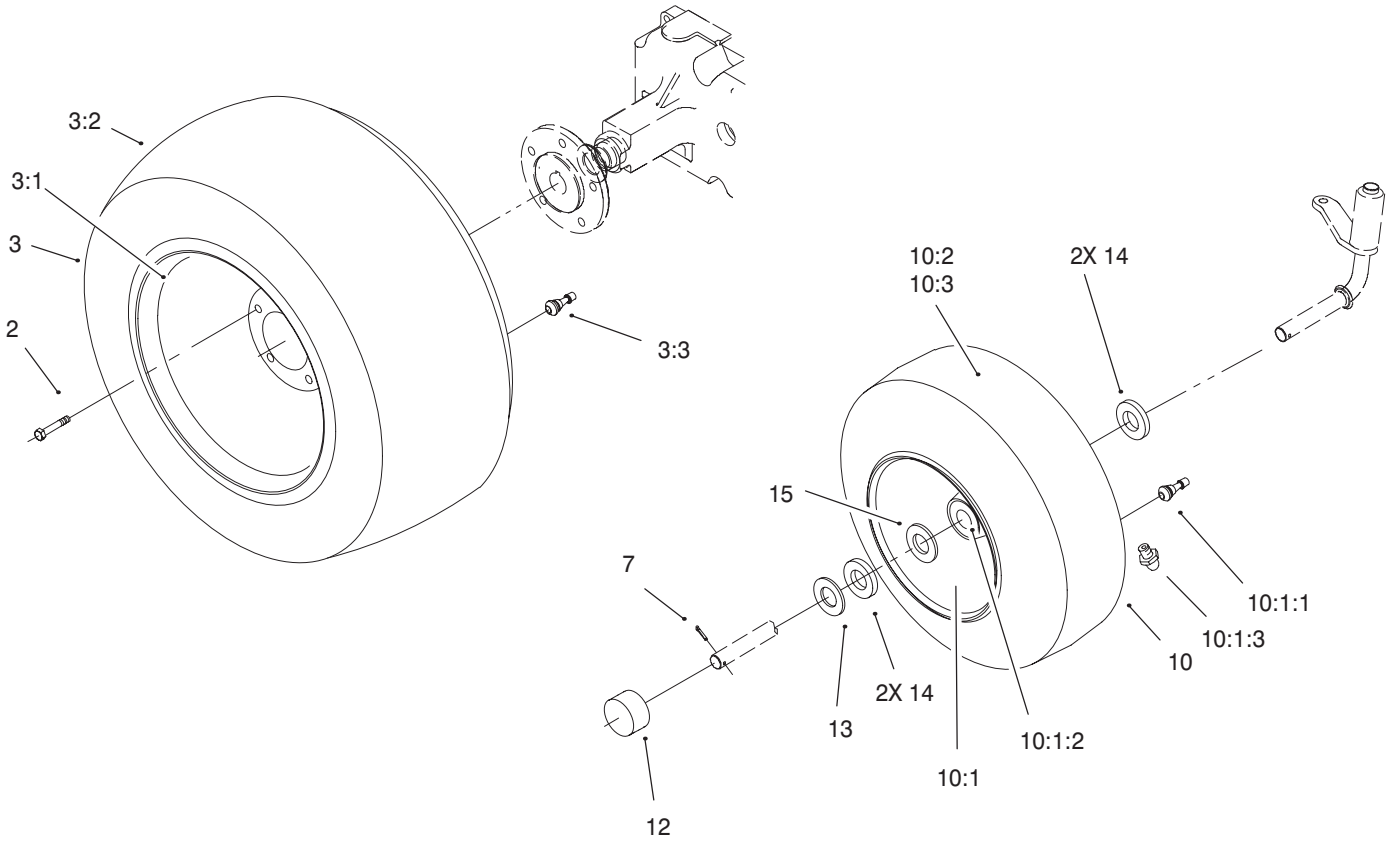

Sheet No.:15

Wheels Assembly

Ref. No.	Part No.	Qty.	Description
2	83–2720	10	Lug–Bolt
☆3		2	Tire ASM (only on: 73429)
☆3		2	Tire ASM (only on: 73449)
3:1	111516	1	Wheel
3:2	116742	1	Tire–23x8.50–12 2ply (only on: 73429)
3:2	116744	1	Tire–23 X 950–12 (only on: 73449)
3:3	5108	1	Valve
7	3272–17	2	Pin–Cotter
☆10		2	Front Wheel ASM (only on: 73449)
☆10		2	Tire ASM (only on: 73429)
10:1	117285	1	Wheel ASM (only on: 73429)
10:1	93–9801	1	Wheel ASM (only on: 73449)
10:1:1	5108	1	Valve (only on: 73449)
10:1:2	110513	2	Bearing–Wheel (only on: 73449)
10:1:3	109500	1	Zerk–Grease (only on: 73449)
10:2	5108	1	Valve (only on: 73449)

Ref. No.	Part No.	Qty.	Description
10:2	116884	1	Tire–15 X 6.00–6 (only on: 73429)
10:3	117127	1	Tire (only on: 73449)
12	61–9780	2	Cap–Hub
13	28–2480	2	Washer
14	1278	4	Washer
15	5210	2	Washer–Shim

☆ Not serviced

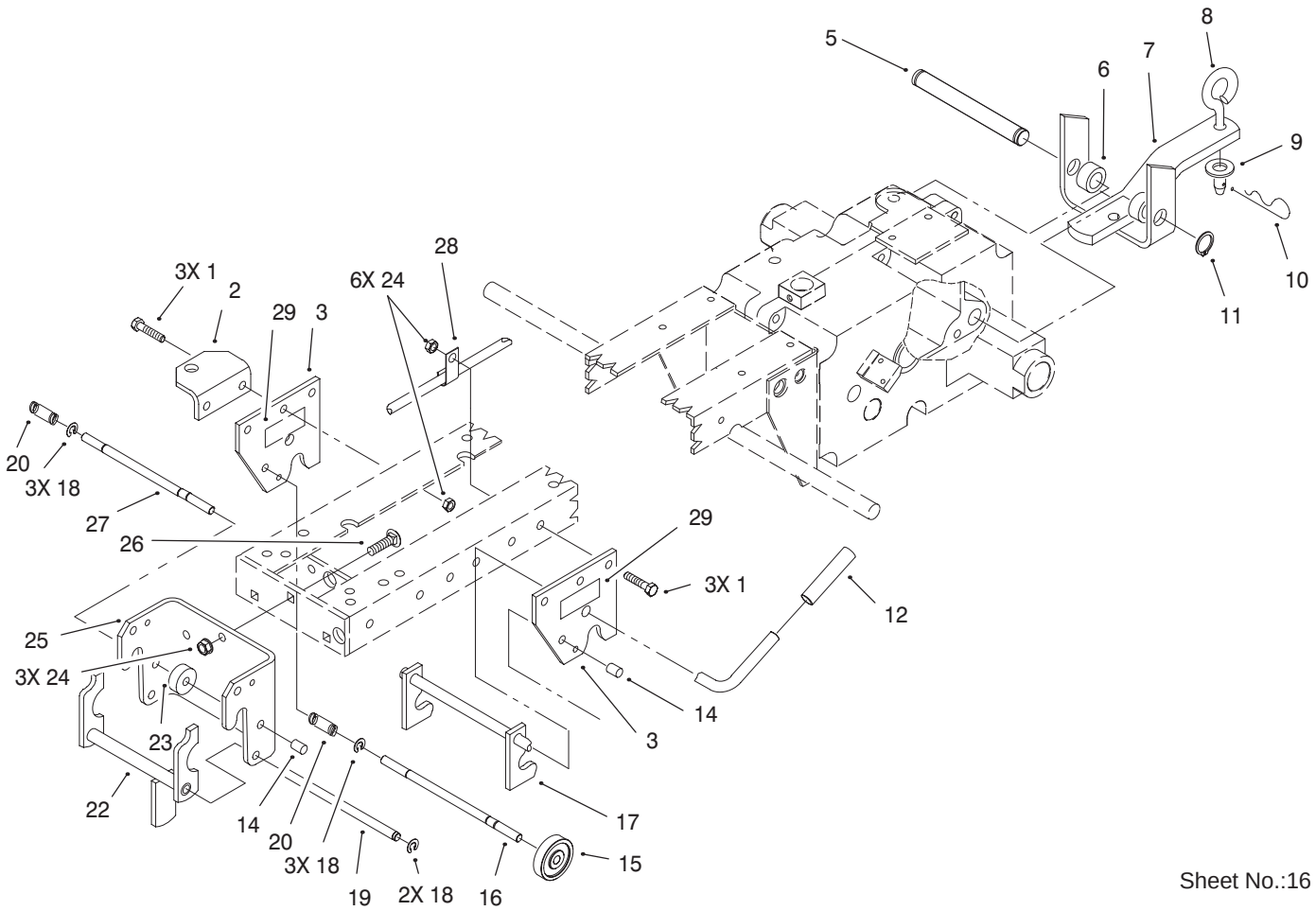

Sheet No.:16

Hitch Assembly

Ref. No.	Part No.	Qty.	Description
1	323–44	6	Screw–HH
2	102870–01	1	Support
3	102644–01	2	Plate–Hitch
5	105269	1	Pin–Stationary Hitch
6	9791204	2	Spacer
7	98–8083–01	1	Hitch ASM
8	106634	1	Pin–Tool
9	3256–26	1	Washer–Flat
10	9335054	1	Pin–Hair
11	5618	2	E–Ring
12	9038	1	Grip
14	105316	2	Cap–Plunger Rod
15	101017	1	Lock
16	83–6520	1	Rod–Lock
17	117930	1	Mid Hitch ASM
18	105797	8	Ring–Retaining
19	101750	1	Rod–Latch Pivot
20	8616	2	Spring
22	93–1613	1	Latch
23	101707	1	Lock
24	3296–39	9	Nut–Lock, NI
25	101711–01	1	Hitch–Front
26	3231–25	3	Screw–CARR
27	101751	1	Rod–Lock
28	8830	1	Clip

Ref. No.	Part No.	Qty.	Description
29	92–8747	2	Decal–Attach–A–Mat ic

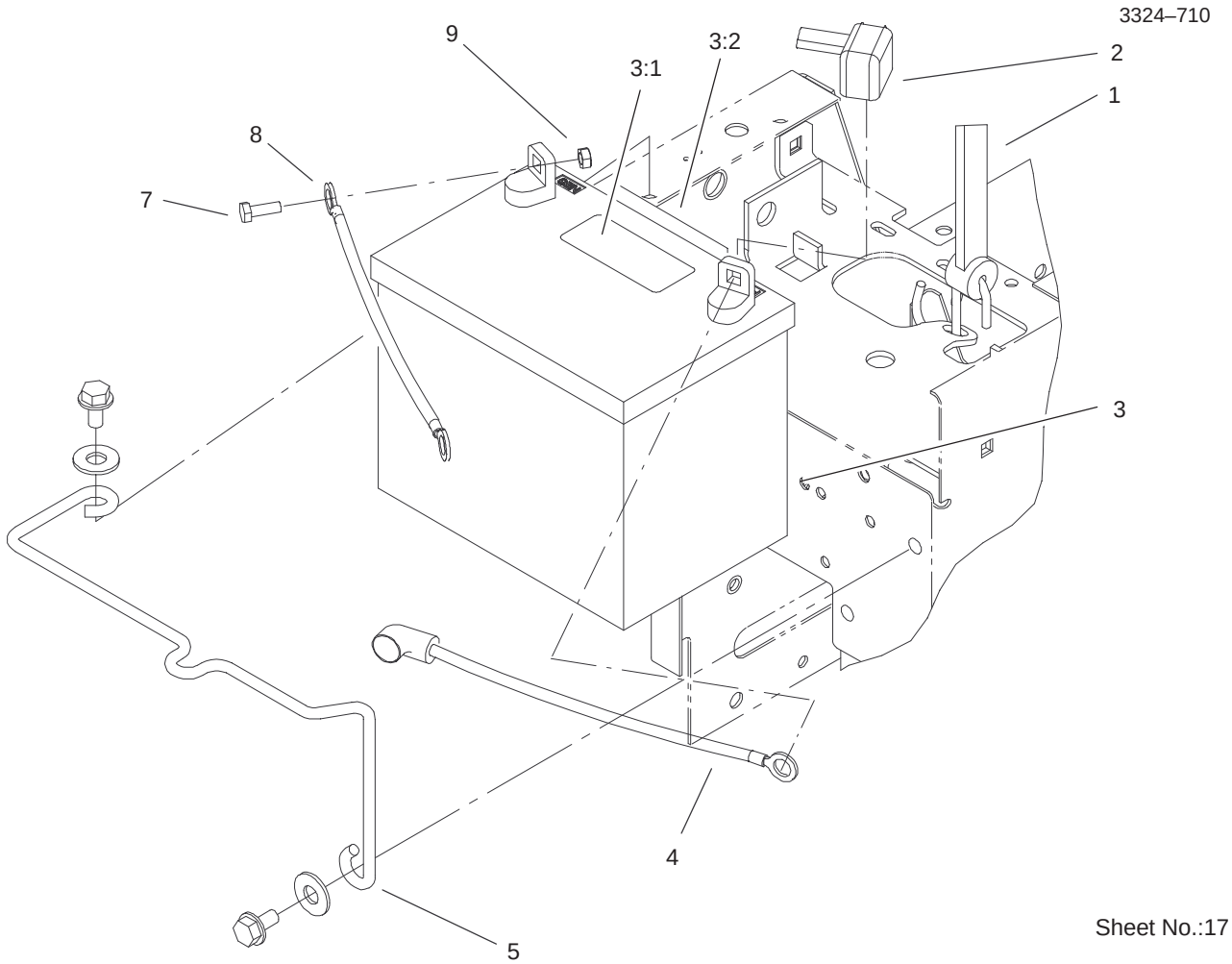

Battery Assembly

Ref. No.	Part No.	Qty.	Description
1	104–2466	1	Holddown–14” Battery
2	28–8080	1	Boot–Terminal
3	104–2493	1	Battery–195 Cca
3:1	104–4163	1	Decal–Battery
3:2	104–4164	1	Decal–Battery
4	100–3539	1	Cable–Battery,Positive
5	104–0847	1	Rod–Battery
7	321–4	2	Screw–HH
8	95–7654	1	Cable
9	3296–42	2	Nut–Lock, NI

Ref. No.	Part No.	Qty.	Description

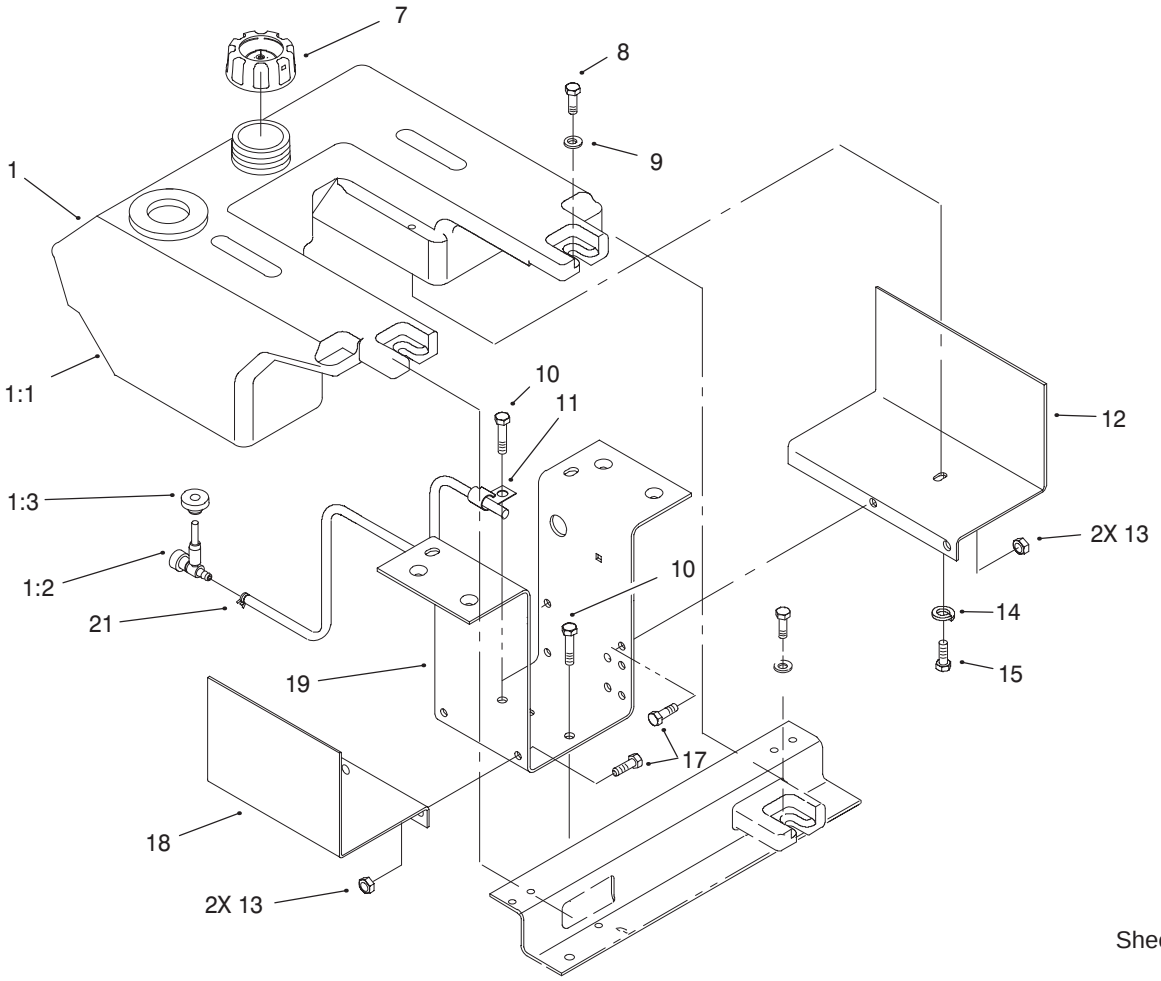

Sheet No.:18

Fuel Tank Assembly

Ref. No.	Part No.	Qty.	Description
1	106234	1	Tank–Fuel
1:1	106235	1	Tank–Fuel
1:2	104048	1	Valve–Fuel
1:3	104047	1	Bushing
7	55–3570	1	Gas Cap ASM
8	9266974	2	Screw–Thr'd Form
9	3256–4	2	Washer–Flat
10	3235–22	2	Screw–HH
11	8830	1	Clip
12	94–6693–03	1	Brkt–Suport
13	3296–29	4	Nut–Lock
14	3253–4	2	Washer–Lock
15	322–2	2	Screw–HH
17	322–3	4	Screw–HH
18	94–6692–03	1	Bracket–Suport
19	79–4990–03	1	Suport–Fender
21	2412–98	2	Clamp

Ref. No.	Part No.	Qty.	Description

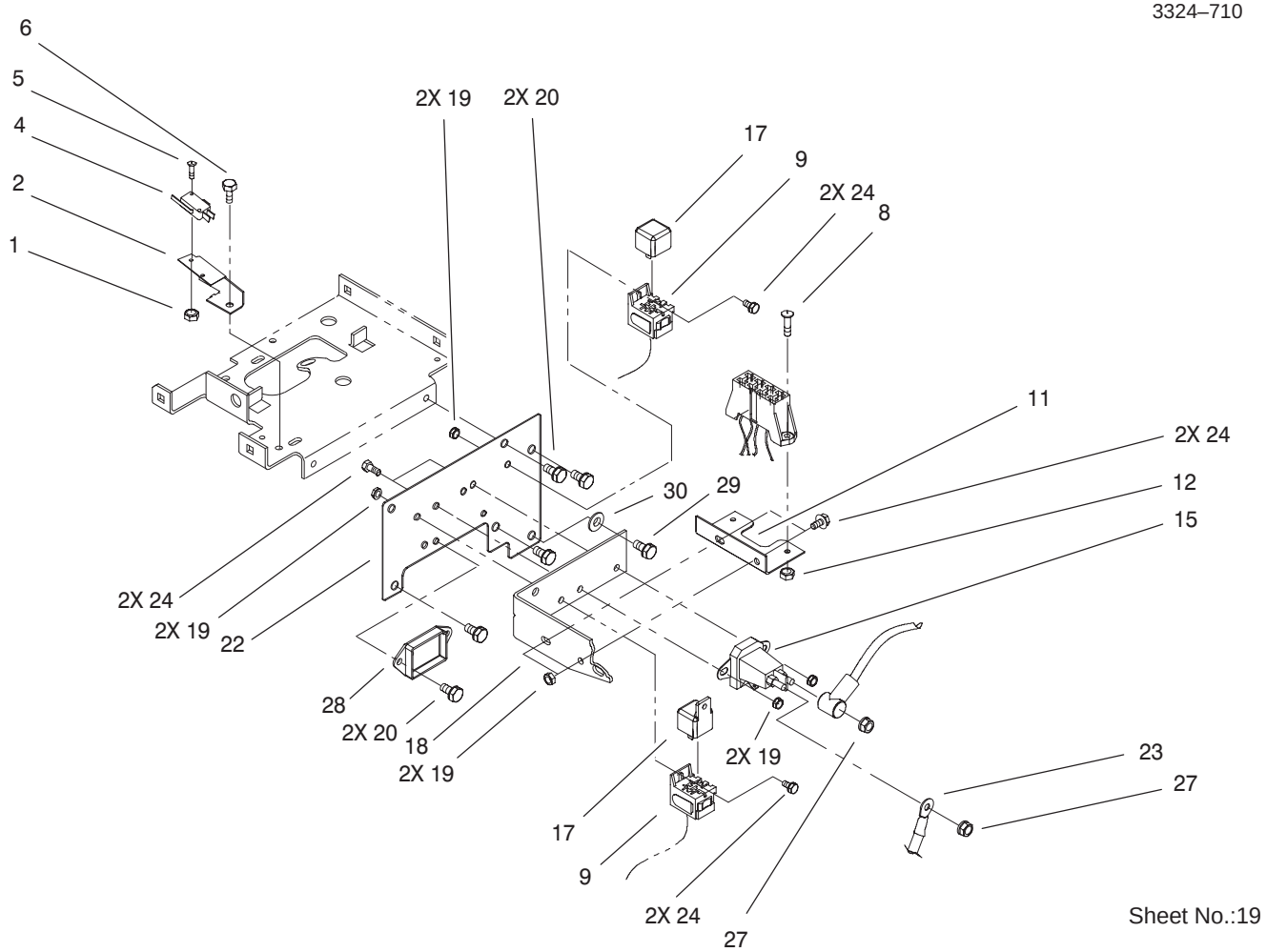

Sheet No.:19

Hoodstand Electrical Mounting Assembly

Ref. No.	Part No.	Qty.	Description
1	9157324	2	Nut–Hex
2	115411	1	Bracket–Switch
4	111332	1	Switch
5	9109484	2	Screw–Pchr
6	9266714	1	Screw–HWH
8	9107944	2	Screw–Pan
9	104–5026	1	Harness–Wire 14 HP (only on: 73449)
9	104–5025	1	Harness–Wire 12 HP (only on: 73429)
11	117331–03	1	Fuse Holder
12	3296–2	2	Nut–Lock
15	28–4210	1	Solenoid
17	98–7249	2	Relay
18	100–6090–03	1	Bracket–Belt
19	3296–42	8	Nut–Lock, NI
20	32144–14	4	Screw–HWH
22	100–6091–03	1	Plate–Hoodstand, Front
23	100–3540	1	Cable–Battery,Positive
24	3234–33	8	Screw–HHF
27	32149–1	2	Nut
28	99–3700	1	Module–Nmir
29	9266974	1	Screw–Thr'd Form
30	3256–4	1	Washer–Flat

Ref. No.	Part No.	Qty.	Description

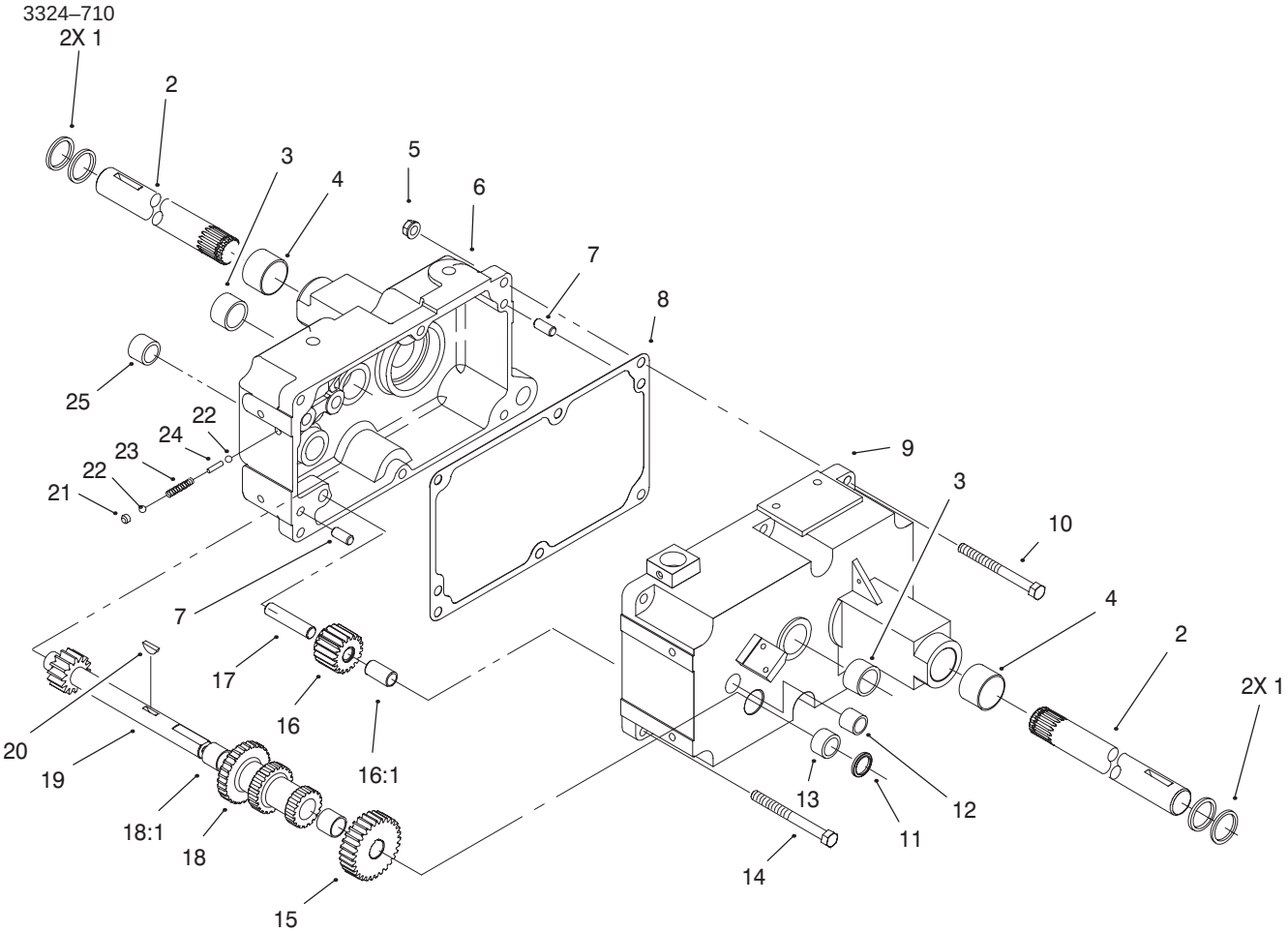

Sheet No.:1

Transmission 8–Speed 4 Pinion (Model 73429 Only)

Ref. No.	Part No.	Qty.	Description
1	100443	4	Seal–Oil
2	105875	2	Axle–Rear
3	1532	2	Bearing–Needle
4	9416	2	Bearing
5	3296–39	6	Nut–Lock, NI
6	111200–01	1	Case–RH Trans
7	3915	2	Pin–Dowel
8	3912	1	Gasket–Transmission
9	95–5143–01	1	Case–Trans LH
10	323–16	1	Screw–HH
11	100441	1	Seal–Oil
12	83–2890	1	Bearing–Needle
13	1523	1	Bearing–Needle
14	323–11	5	Screw–HH
15	3527	1	Gear–Cluster Shaft
16	4204	1	Gear/Bushing ASM–Reverse Idler
16:1	1516	1	Bushing
17	3909	1	Pin–Differential
18	7269	1	Gear–Cluster
18:1	1504	2	Bushing–Bronze
19	83–3530	1	Shaft–Cluster
20	937089	1	Key
21	1243	1	Cup–Plug
22	3517	2	Ball–Detent
23	106030	1	Spring–Shift Stop
24	5614	1	Pin–Shift
25	1529	1	Bearing–Needle

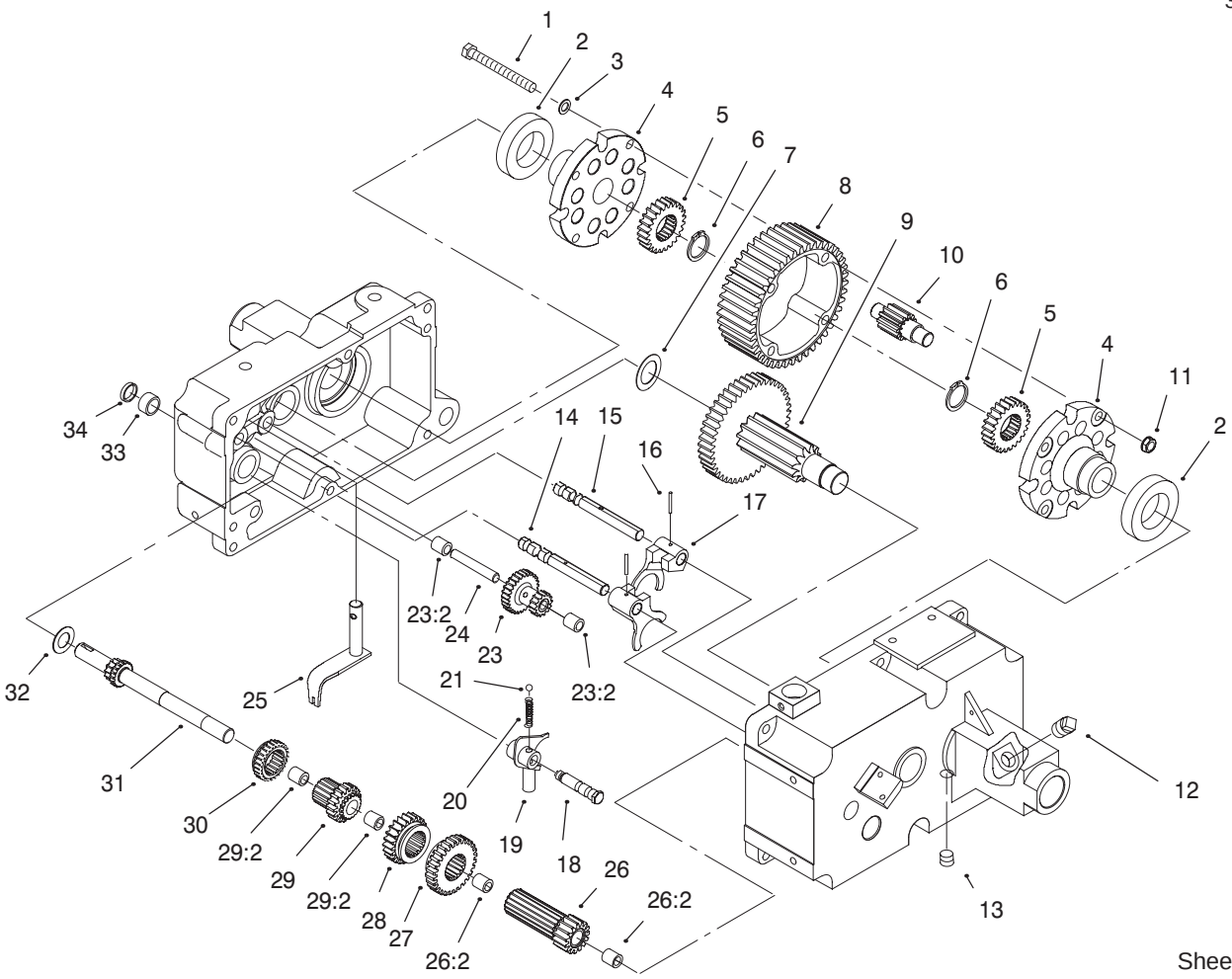

Sheet No.:2

Transmission 8–Speed 4 Pinion (continued) (Model 73429 Only)

Ref. No.	Part No.	Qty.	Description
1	911423	4	Bolt–Hex
2	111199	2	Bearing–Ball
3	107374	4	Washer
4	111196	2	End Cap–Differential
5	101889	2	Gear–Axle Differential
6	105876	2	Ring–Snap
7	9547	1	Washer–Thrust
8	105061	1	Gear–Differential Ring 43t
9	102974	1	Gear ASM
10	101623	4	Gear–Pinion 11t
11	108881	4	Nut
12	281–2	1	Plug–Pipe, Square Head
13	99–8551	1	Plug–Pipe
14	5615	1	Rail–Shift
15	5616	1	Rail–Rear Shift
16	933156	2	Pin–Spirol, Roll
17	3503	2	Fork–Shift
18	7213	1	Bolt–Detent
19	116636	1	Shift Fork ASM
20	106030	1	Spring–Shift Stop
21	3517	1	Ball–Detent
23	100–1338	1	ASM–Gear Reduction

Ref. No.	Part No.	Qty.	Description
23:2	7207	2	Bearing–Needle
24	7208	1	Gear–Shaft Reduction
25	7214	1	Shift ASM
26	5175	1	Gear
26:2	1518	2	Bearing–Needle
27	5174	1	Gear–Low And Reverse
28	5173	1	Gear–Hi And 2nd
29	7204	1	Gear
29:2	1518	2	Bearing–Needle
30	7205	1	Gear–Sliding
31	7201	1	Shaft–Input
32	7418	1	Washer–Thr
33	1542	1	Bearing–Needle
34	100442	1	Seal–Oil

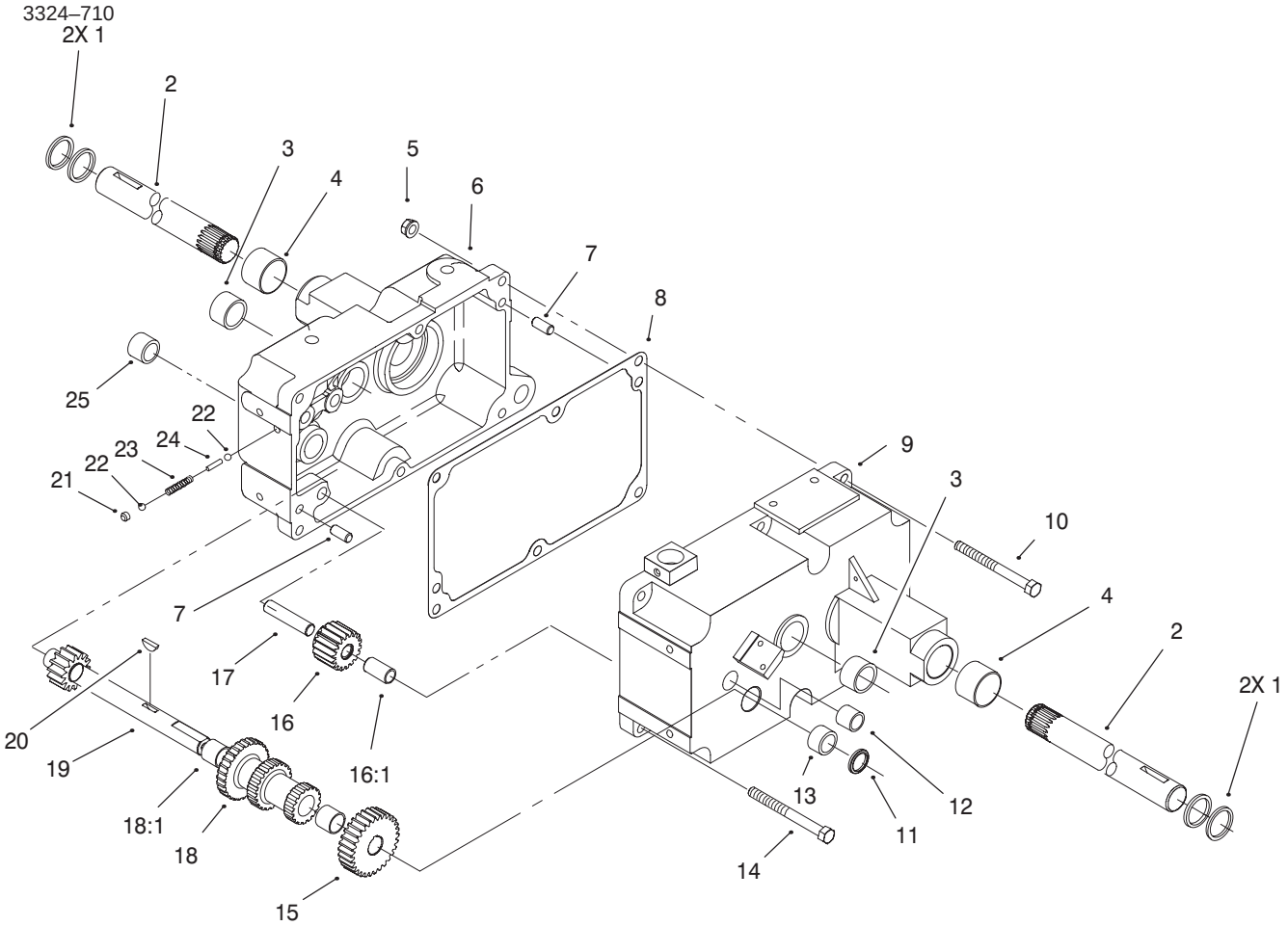

Sheet No.:1

Transmission 8–Speed 8 Pinion (Model 73449 Only)

Ref. No.	Part No.	Qty.	Description
1	100443	4	Seal–Oil
2	105875	2	Axle–Rear
3	1532	2	Bearing–Needle
4	9416	2	Bearing
5	3296–39	6	Nut–Lock, NI
6	111200–01	1	Case–RH Trans
7	3915	2	Pin–Dowel
8	3912	1	Gasket–Transmission
9	95–5143–01	1	Case–Trans LH
10	323–16	1	Screw–HH
11	100441	1	Seal–Oil
12	83–2890	1	Bearing–Needle
13	1523	1	Bearing–Needle
14	323–11	5	Screw–HH
15	3527	1	Gear–Cluster Shaft
16	4204	1	Gear/Bushing ASM–Reverse Idler
16:1	1516	1	Bushing
17	3909	1	Pin–Differential
18	7269	1	Gear–Cluster
18:1	1504	2	Bushing–Bronze
19	83–3530	1	Shaft–Cluster
20	937089	1	Key
21	1243	1	Cup–Plug
22	3517	2	Ball–Detent
23	106030	1	Spring–Shift Stop
24	5614	1	Pin–Shift
25	1529	1	Bearing–Needle

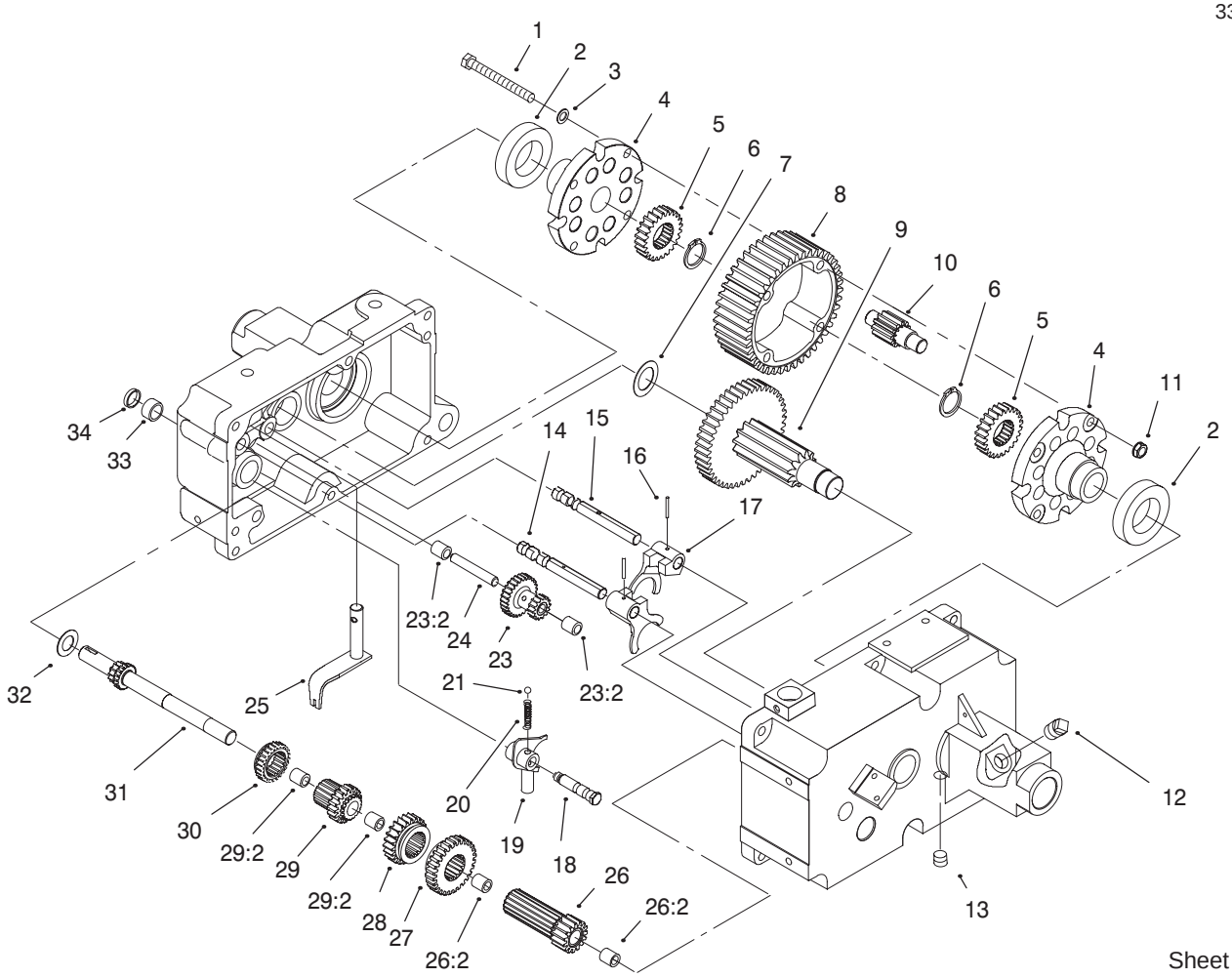

Sheet No.:2

Transmission 8–Speed 8 Pinion (continued) (Model 73449 Only)

Ref. No.	Part No.	Qty.	Description
1	911423	4	Bolt–Hex
2	111199	2	Bearing–Ball
3	107374	4	Washer
4	111196	2	End Cap–Differential
5	101889	2	Gear–Axle Differential
6	105876	2	Ring–Snap
7	9547	1	Washer–Thrust
8	105061	1	Gear–Differential Ring 43t
9	102974	1	Gear ASM
10	101623	8	Gear–Pinion 11t
11	108881	4	Nut
12	281–2	1	Plug–Pipe, Square Head
13	99–8551	1	Plug–Pipe
14	5615	1	Rail–Shift
15	5616	1	Rail–Rear Shift
16	933156	2	Pin–Spirol, Roll
17	3503	2	Fork–Shift
18	7213	1	Bolt–Detent
19	116636	1	Shift Fork ASM
20	106030	1	Spring–Shift Stop
21	3517	1	Ball–Detent
23	100–1338	1	ASM–Gear Reduction

Ref. No.	Part No.	Qty.	Description
23:2	7207	2	Bearing–Needle
24	7208	1	Gear–Shaft Reduction
25	7214	1	Shift ASM
26	5175	1	Gear
26:2	1518	2	Bearing–Needle
27	5174	1	Gear–Low And Reverse
28	5173	1	Gear–Hi And 2nd
29	7204	1	Gear
29:2	1518	2	Bearing–Needle
30	7205	1	Gear–Sliding
31	7201	1	Shaft–Input
32	7418	1	Washer–Thr
33	1542	1	Bearing–Needle
34	100442	1	Seal–Oil

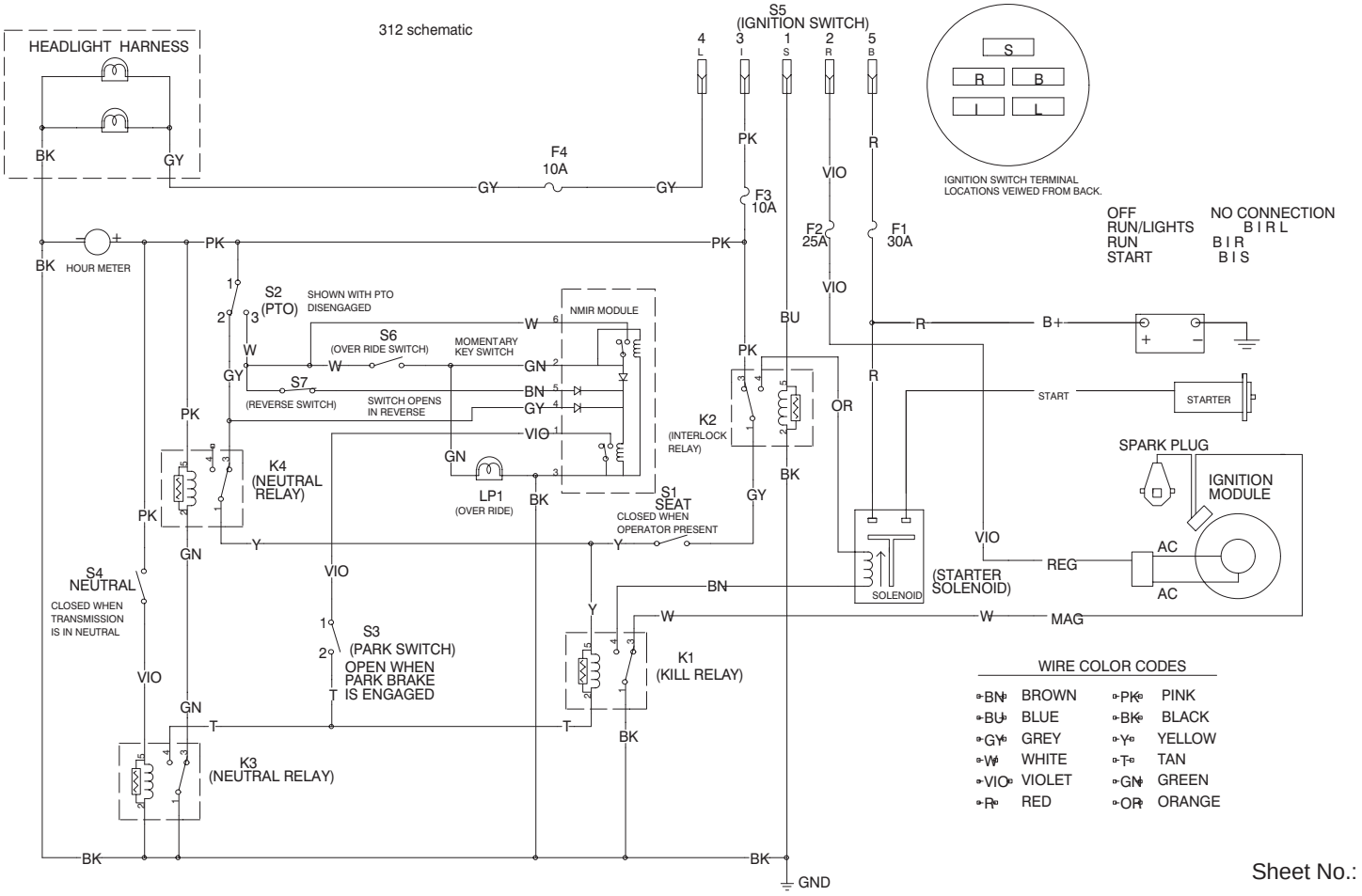

Sheet No.:

Electrical Schematic (Model 73429 Only)

Ref. No.	Part No.	Qty.	Description
F1	Nn10277	1	Fuse–30 Amp
F2	109102	1	Fuse–25 Amp
F3 & F4	114594	2	Fuse–10 Amp

Ref. No.	Part No.	Qty.	Description

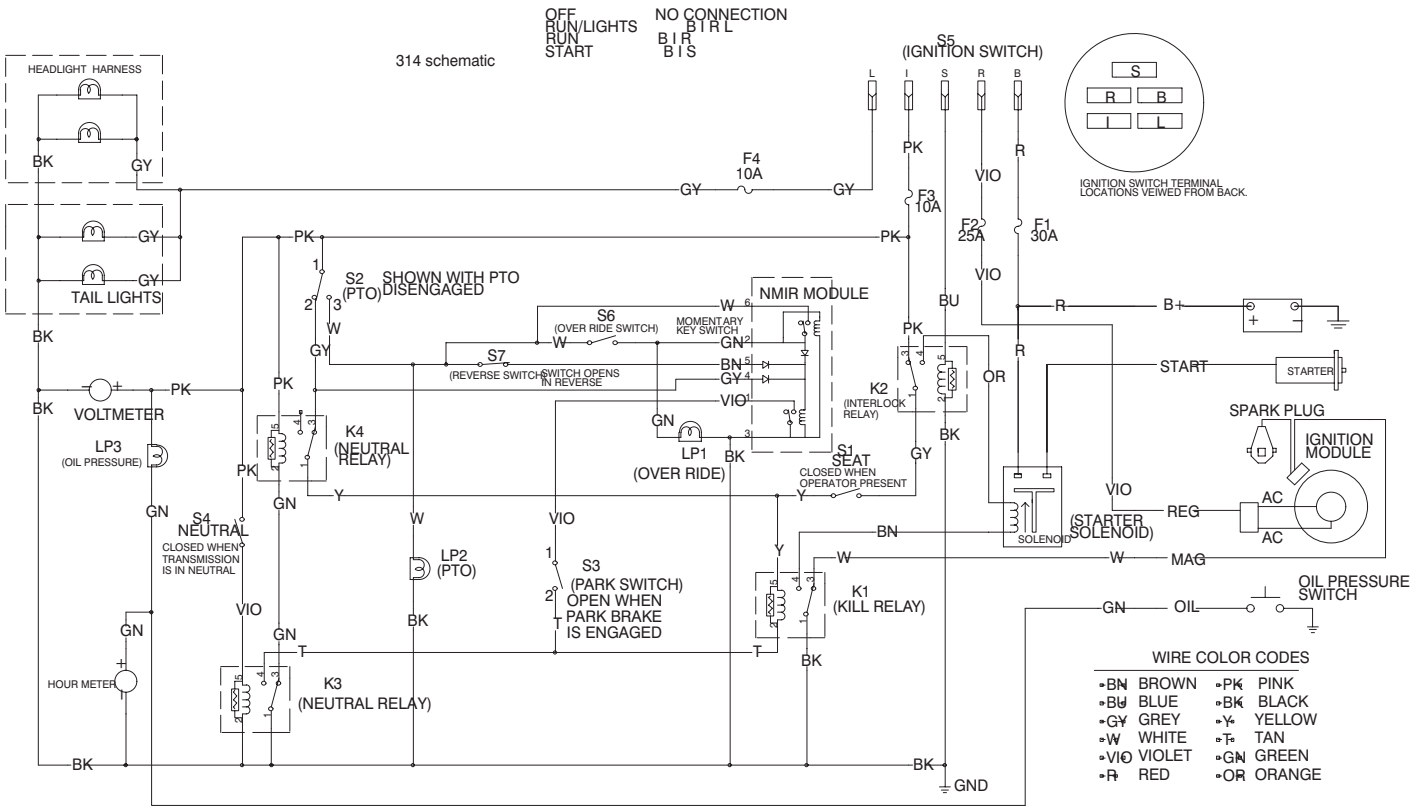

Sheet No.:

Electrical Schematic (Model 73449 Only)

Ref. No.	Part No.	Qty.	Description
F1	Nn10277	1	Fuse–30 Amp
F2	109102	1	Fuse–25 Amp
F3 & F4	114594	2	Fuse–10 Amp

Ref. No.	Part No.	Qty.	Description

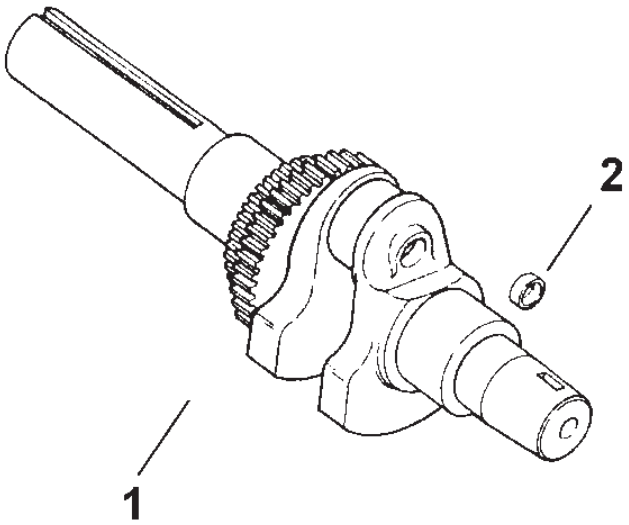

Crankshaft (Model 73429 Only)

Ref. No.	Part No.	Qty.	Description
1	12 014 48	2	Crankshaft (Incl. # 2)
2	12 139 01	2	Plug, cup

Ref. No.	Part No.	Qty.	Description

Kohler Engine CH12.5PS–1935
Obtain Parts From Kohler

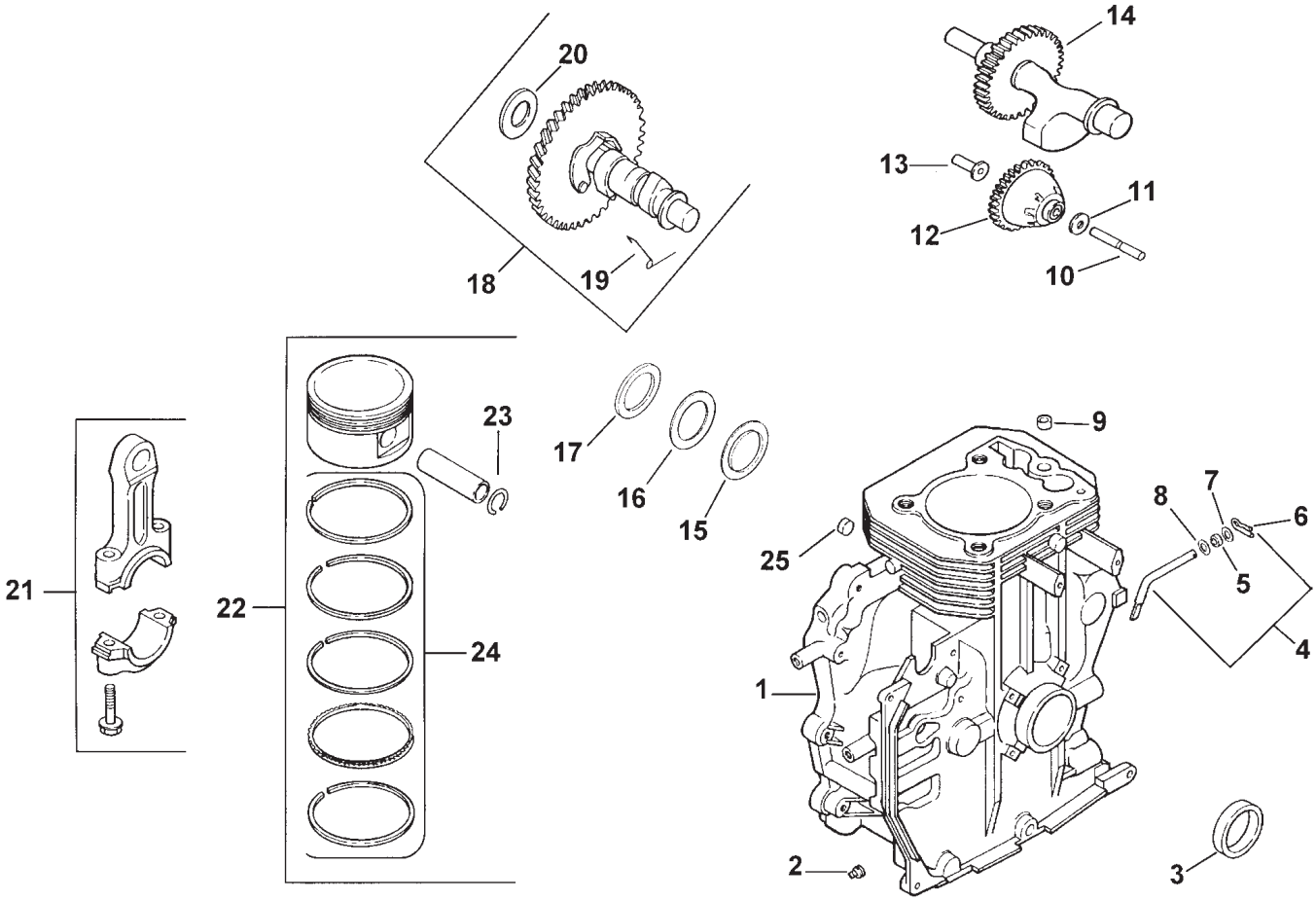

Crankcase (Model 73429 Only)

Ref. No.	Part No.	Qty.	Description
1		1	Short Block
2	X–75–10	2	Plug, solid sq. hd. 3/8
3	12 032 03		Seal, crankshaft
4	12 755 64	6	Kit, governor cross shaft (Includes # 6)
5	12 032 01		Seal, governor cross shaft
6	12 154 05		Clip, hitch pin
7	X–25–102		Washer, plain 1/4
8	M–0631015		Washer, plain 6 mm
9	12 380 17	4	Dowel, locating
10	12 144 02		Shaft, governor gear
11	M–0631005		Washer, plain 6 mm
12	12 043 05		Gear, governor
13	12 380 01		Pin, governor regulating
14	12 144 26		Shaft, balance
15	24 030 08		Bearing, thrust
16	52 114 04		Washer, thrust
17	24 422 04		Shim, thrust
18	12 755 50		Kit, camshaft (Includes
19	12 089 31		Spring, actuating
20	12 422 08		Shim, camshaft (A.R.) blue

Ref. No.	Part No.	Qty.	Description
	12 422 09		Shim, camshaft (A.R.) red
	12 422 10		Shim, camshaft (A.R.) yellow
	12 422 11		Shim, camshaft (A.R.) green
	12 422 12		Shim, camshaft (A.R.) gray
	12 422 13		Shim, camshaft (A.R.) black
	12 422 07	1	Shim, camshaft (A.R.) white
21	12 067 05		Connecting Rod (Std.)
	12 067 06		Connecting Rod (.25)
22	12 874 01		Piston w/Ring Set (Std.) (Includes 23,24)
	12 874 02		Piston w/Ring Set (.25)
	12 874 03		Piston w/Ring Set (.50)
23	12 018 02		Retainer, piston pin
24	12 108 01		Ring Set (Std.)
	12 108 02		Ring Set (.25)
	12 108 03		Ring Set (.50)
25	52 139 09		Plug, cup

Kohler Engine CH12.5PS–1935
Obtain Parts From Kohler

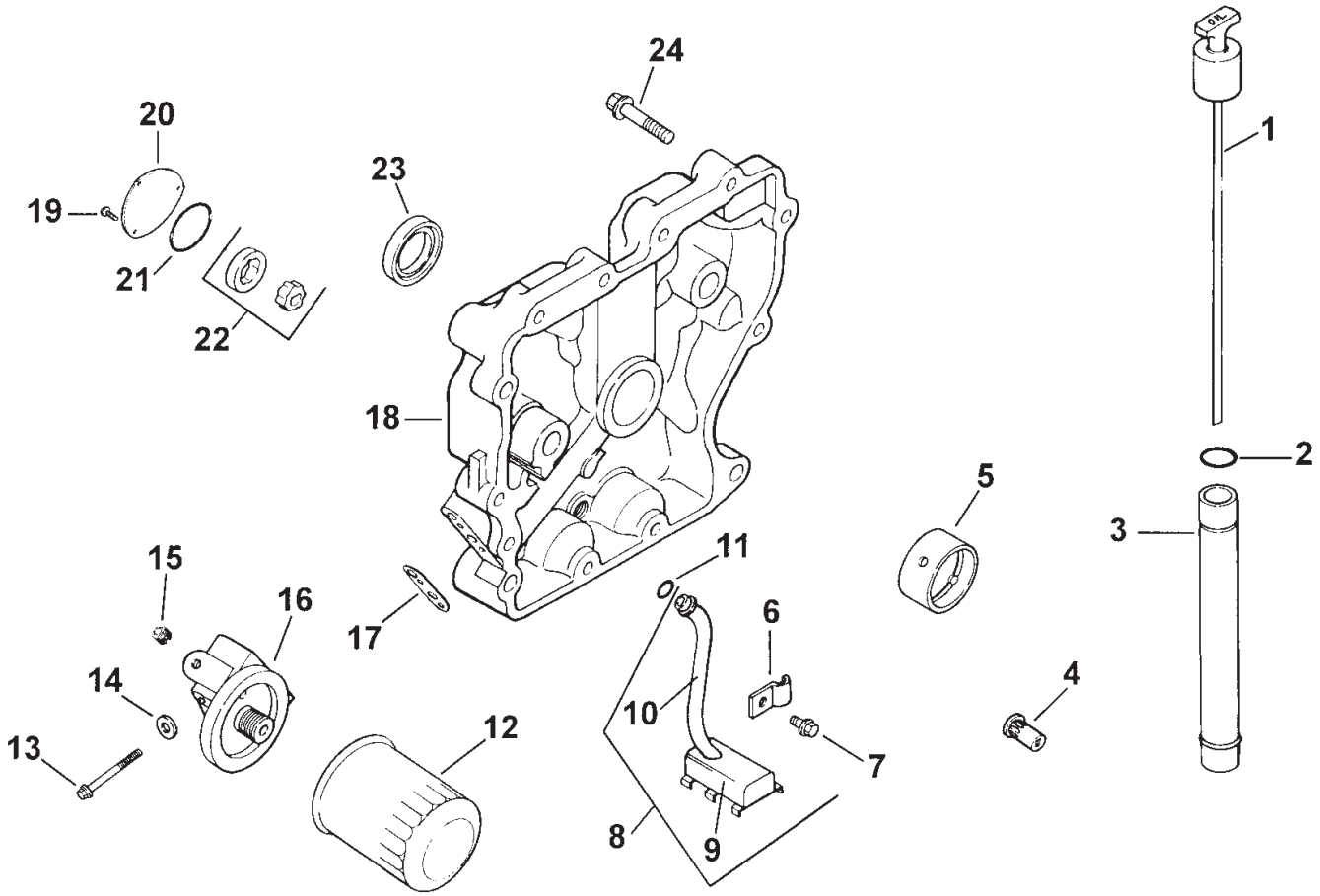

Oil Pan / Lubrication (Model 73429 Only)

Ref. No.	Part No.	Qty.	Description
1	47 038 26		Dipstick
2	41 153 01		O–Ring, oil fill tube
3	24 123 11		Tube, oil fill
4	25 462 09		Valve, oil pressure relief
5	12 030 05		Bearing, crankshaft
6	52 154 01		Clip
7	M–0545016		Screw ,hex.flange M5x0.8x16
8	12 755 73		Kit, oil pick–up (Includes 9,10)
9	25 381 01		Pick–up, oil screen
10	12 123 21		Tubing, oil pick–up
11	12 153 04		O–Ring, oil pick–up
12	52 050 02		Filter, oil
13	M–0651060	2	Screw, hex. flange M6x1.0x60
14	X–25–12	2	Washer, plain 1/4
15	X–75–23		Plug, allen hd. 1/8” pip
16	12 029 01		Adapter, oil filter
17	12 041 07		Gasket, oil filter adapter
18	1200936		Plate, closure Asm (Includes 4,5,19–22)
19	M–0545016	3	Screw, hex. flange M5x0.8x16

Ref. No.	Part No.	Qty.	Description
20	12 096 21		Cover, oil pump
21	12 153 05		O–Ring, oil pump cover
22	12 393 01		Pump, oil
23	12 032 03		Seal, oil (P.T.O. end)
24	24 086 16	11	Screw, hex. flange M8x1.25x45
24	24 086 17		Screw, hex. flange M8x1.25x45

Kohler Engine CH12.5PS–1935
Obtain Parts From Kohler

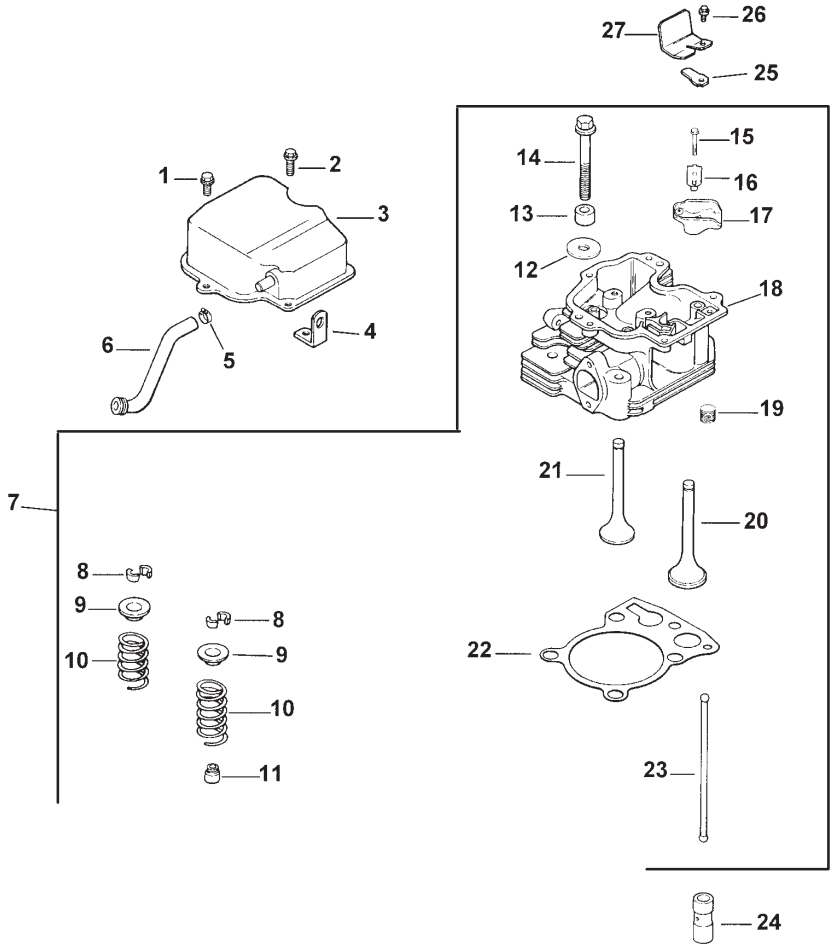

Cylinder Head / Valve And Breather (Model 73429 Only)

Ref. No.	Part No.	Qty.	Description
1	M–0645020	4	Screw, hex. flange M6x1.0x20
2	M–0645025		Screw, hex. flange M6x1.0x25
3	12 096 07		Cover, valve w/nipple
4	12 445 05		Strap, lifting (PTO side)
5	X–426–9		Clamp, hose
6	12 326 09		Hose, breather
7	12 041 01		Kit, cylinder head (Includes 8–23,
	12 041 02	2	carburetor gasket , air cleaner, base gasket,
	12 041 03		& exhaust manifold
	12 755 81		gasket)
8	12 755 03	2	Kit, retainer
9	12 173 01	2	Cap, valve spring
10	12 089 01	2	Spring, valve
11	24 032 05	2	Seal, valve stem
12	12 468 05		Washer, plain 13/32
13	12 112 13		Spacer, head bolt exhaust port
14	12 086 15	5	Screw, hex. flange M10x1.5x81
15	M–0640034	2	Screw, hex. flange M6x1.0x34

Ref. No.	Part No.	Qty.	Description
16	12 599 03	2	Pivot, rocker arm
17	25 186 01	2	Arm, rocker
18	12 318 19		Head, cylinder
19	X–75–23		Plug, allen hd. 1/8 pipe
20	12 017 01		Valve, intake (Std.)
21	12 016 01		Valve, exhaust (Std.)
22	12 041 08		Gasket, cylinder head
23	12 411 01	2	Rod, push
24	12 351 02	2	Lifter, valve
25	12 402 02		Reed, breather
26	M–0545010		Screw, hex. flange M5x0.8x10
27	12 018 03		Retainer, breather reed
			Not Illustrated
	12 017 02		Valve, intake (.25)
	12 016 02		Valve, exhaust (.25)

Kohler Engine CH12.5PS–1935
Obtain Parts From Kohler

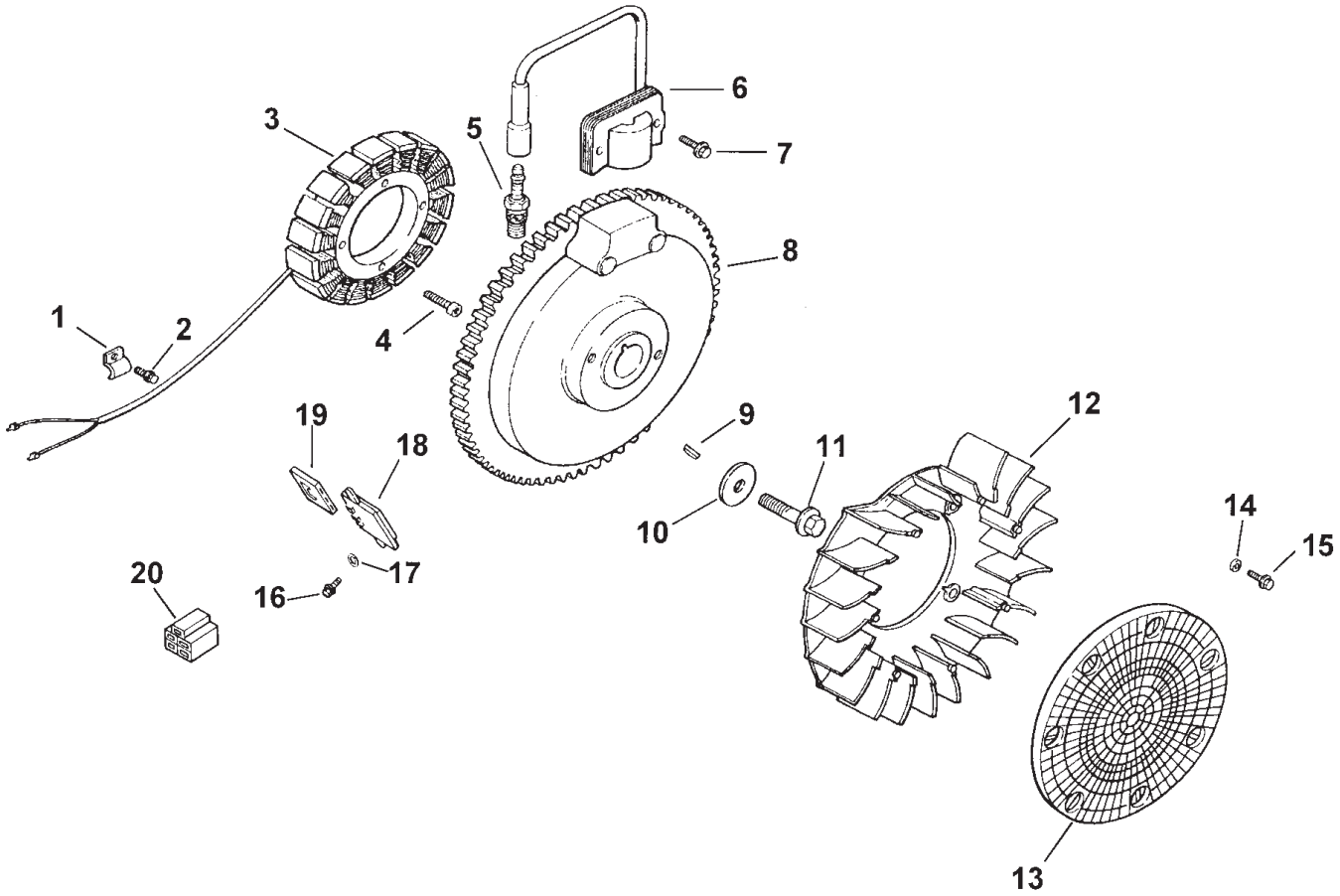

Ignition / Electrical (Model 73429 Only)

Ref. No.	Part No.	Qty.	Description
1	X–728–1	2	Clip
2	M–0545010	2	Screw, hex. flange M5x0.8x10
3	24 126 71		Kit, 15 amp stator (Includes
	54 755 09		Bracket).
4	M–0548025	2	Screw, hex. cap M5x0.8x25
5	12 132 02		Spark Plug
6	12 584 04		Module, ignition
7	M–0545020	2	Screw, hex. flange M5x0.8x20
8	12 025 15		Flywheel
9	X–42–15		Key
10	12 468 03		Washer, plain 3/8
11	12 086 14		Screw, hex. flange M10x1.5x46
12	12 157 03		Fan
13	24 162 03		Screen, grass
14	12 112 01	4	Spacer, fan
15	M–0639016	4	Screw, hex. flange M6x1.0x16
16	M–0639016	2	Screw, hex. flange M6x1.0x16
17	X–22–11		Washer, lock 1/4”
18	41 403 09		Rectifier–regulator

Ref. No.	Part No.	Qty.	Description
19	236602		Connector
20	48 155 01		Connector
			NOT ILLUSTRATED
	25 518 29		Lead, black (6” – 18 gauge – insulated grip barrel eyelet terminals)
	12 518 01		Lead, white, ground to kill (19” – 18 gauge– insulated push on tab, uninsulated push on tab terminals)
	25 518 05		Lead, black, rectifier–regulator (5” – 14 gauge – uninsulated push on tab terminals)
	24 126 71		Bracket, stator wire

Kohler Engine CH12.5PS–1935
Obtain Parts From Kohler

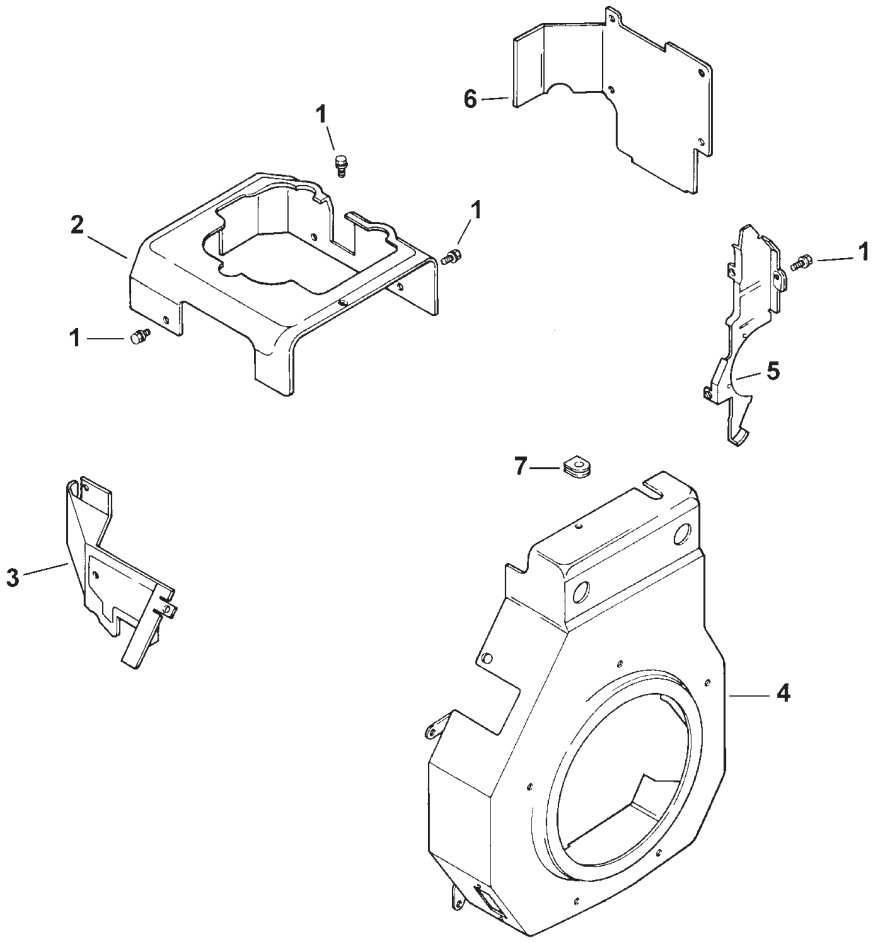

Blower Housing And Baffles (Model 73429 Only)

Ref. No.	Part No.	Qty.	Description
1	M–0545010	14	Screw, hex. flange M5x0.8x10
2	12 063 08		Baffle, cylinder head
3	12 063 05		Baffle, intake side
4	12 027 39		Housing, blower
5	12 146 07		Plate, blower housing
6	12 063 01		Baffle, cylinder barrel
7	12 313 03		Grommet, blower housing
			Not Illustrated
	12 113 30		Decal, HP

Ref. No.	Part No.	Qty.	Description

Kohler Engine CH12.5PS–1935
Obtain Parts From Kohler

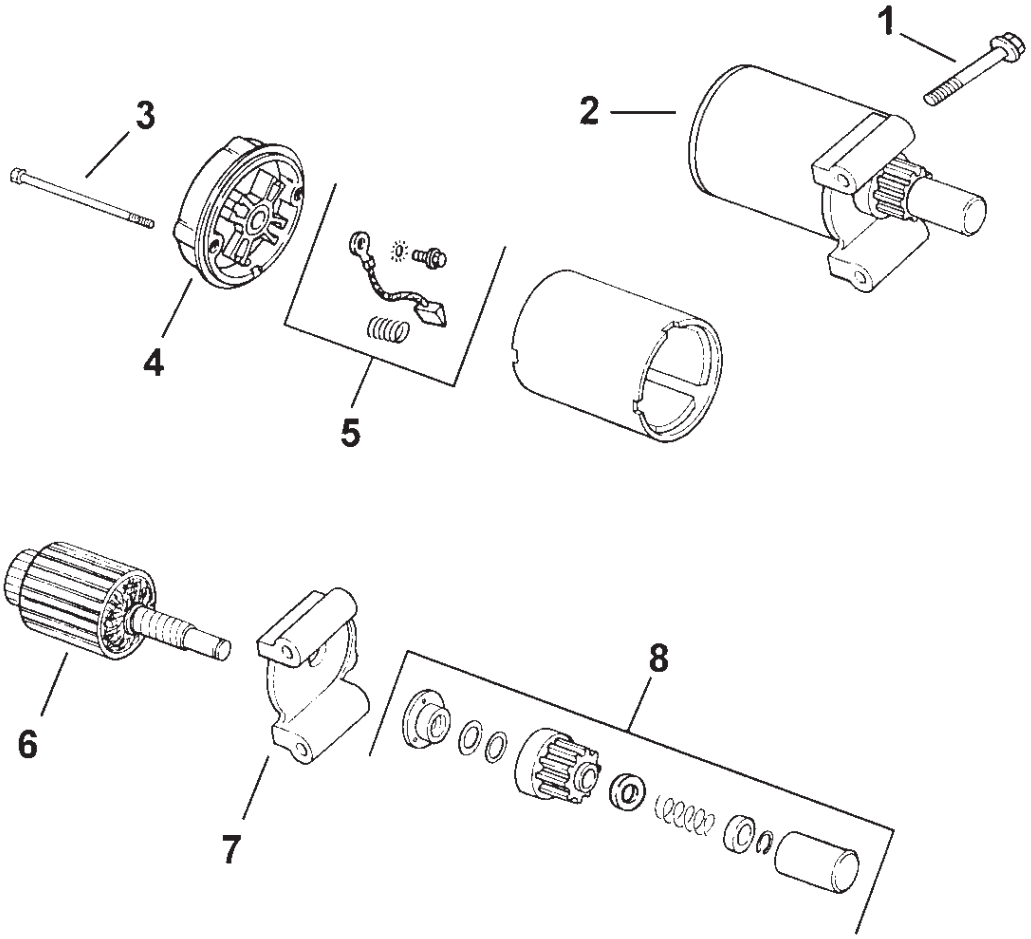

Starter (Model 73429 Only)

Ref. No.	Part No.	Qty.	Description
1	M–0839070D	2	Screw, hex. flange M8x1.25x70
2	12 098 12		Starter assembly (Includes 3–8)
3	12 086 25	2	Screw, hex. flange 1/4–20x4–5/8
4	12 227 10		Cap, commutator end
5	82 755 28		Kit, brush & spring
6	45 170 03		Armature
7	12 227 05		Cap, drive end
8	12 755 53		Kit, drive

Ref. No.	Part No.	Qty.	Description

Kohler Engine CH12.5PS–1935
Obtain Parts From Kohler

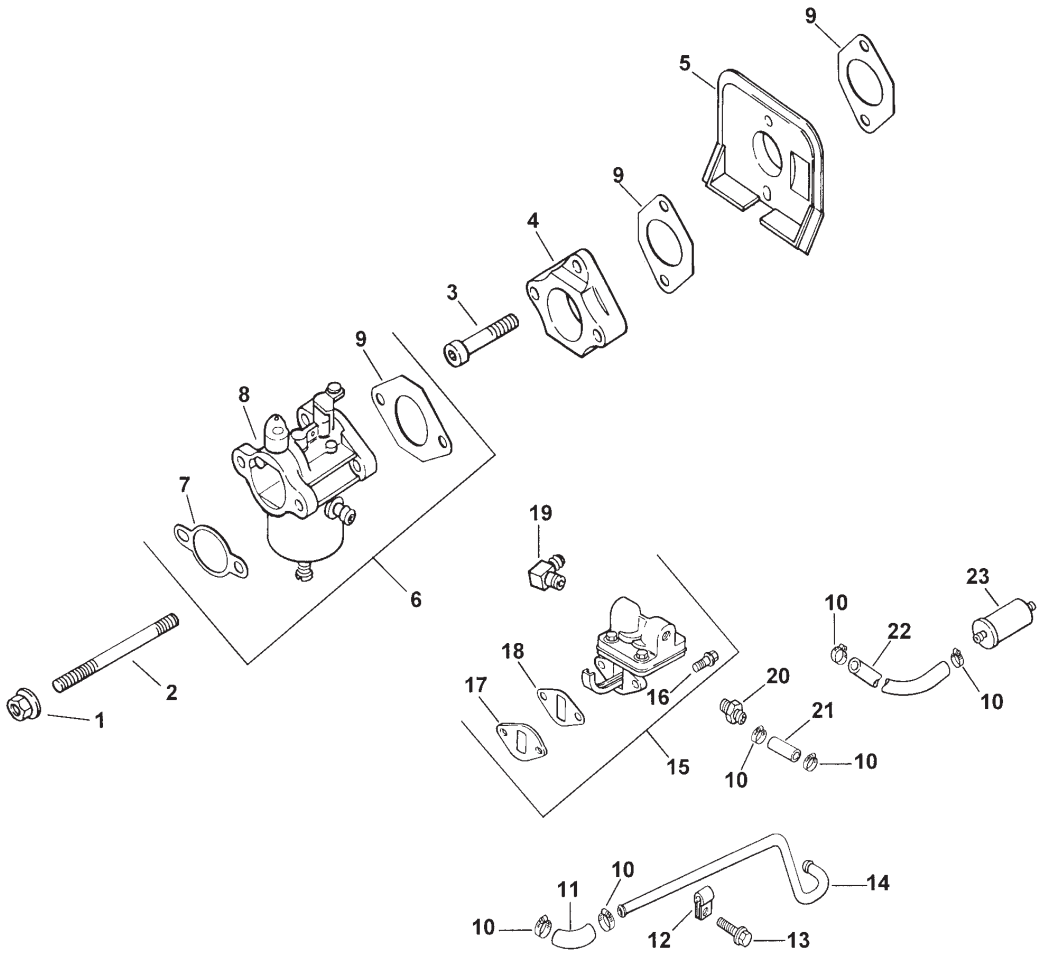

Carburetor And Fuel Pump (Model 73429 Only)

Ref. No.	Part No.	Qty.	Description
1	M–0641060	2	Nut, hex. flange M6x1.0
2	M–0629085	2	Stud M6x1.0x85
3	M–0644035	2	Screw, hex. socket cap M6x1.0x35
4	12 029 04		Adapter, carburetor
5	12 265 04		Deflector, heat
6	12 853 60	1	Kit, carburetor w/gaskets (Incl. 7–90)
7	12 041 02		Gasket, air cleaner
8	12 053 60		Carburetor assembly (For information only not available separately) (Service with parts listed under ”Not Illustrated”)
9	12 041 01	3	Gasket, carburetor
10	X–426–9	6	Clamp, hose
11	12 353 07		Line fuel
12	12 154 01		Clip, tube
13	M–0545010		Screw, hex. flange M5x0.8x10
14	12 353 11		Line, fuel – metal
15	12 559 01		Kit, fuel pump (Includes 16–18)
16	M–0645020	2	Screw, hex. flange M6x1.0x20
17	12 112 05		Spacer
18	25 041 09	2	Gasket, fuel pump
19	25 155 02		Connector, 90_ hose

Ref. No.	Part No.	Qty.	Description
20	X–380–1		Connector, straight hose
21	12 353 01		Line, fuel 1–1/4”
22	25 353 02		Line, fuel 3”
23	25 050 02		Filter, fuel
			NOT ILLUSTRATED
	12 368 05		Needle, idle fuel adjusting
	12 089 09	2	Spring, idle adjusting
	12 086 04		Screw, idle speed adjusting
	12 146 03		Plate, throttle
	25 086 27	2	Screw, throttle plate
	12 144 09		Shaft, throttle w/lever & seal
	12 337 04		Jet, main
	12 757 08		Kit, choke repair
	12 146 12		Plate, choke
	12 173 06		Cap, choke lever
	25 086 27	2	Screw, choke plate
	12 757 02		Kit, float
	12 041 05		Gasket, bowl
	12 104 01		Bowl, fuel
	12 086 05		Screw, fuel bowl retainer
	12 041 06		Gasket, bowl retainer screw
	12 757 03		Kit, carburetor repair

Kohler Engine CH12.5PS–1935
Obtain Parts From Kohler

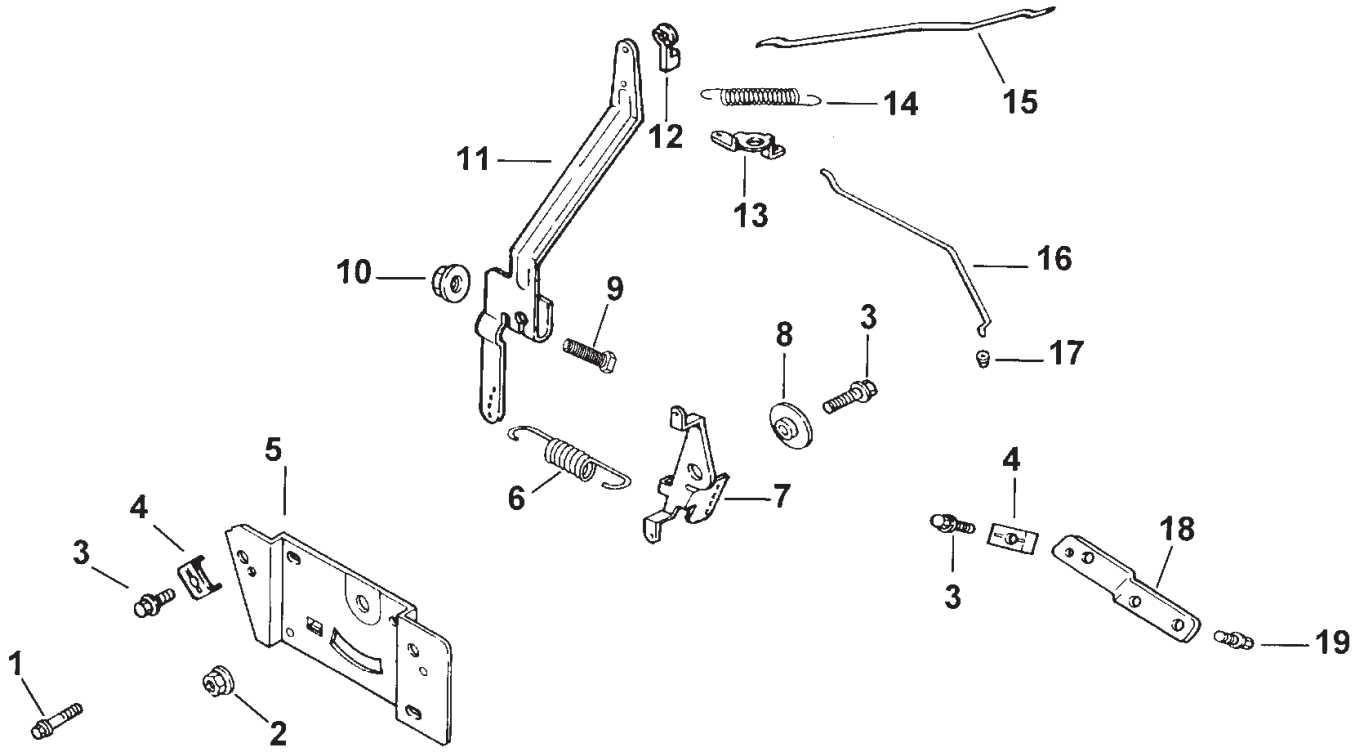

Engine Controls (Model 73429 Only)

Ref. No.	Part No.	Qty.	Description
1	M–0664020	2	Screw, lobed socket M6x1.0x20
2	M–0541050		Nut, hex. flange M5x0.8
3	M–0545016	4	Screw, hex. flange M5x0.8x16
4	12 237 01	3	Clamp, cable
5	12 146 05		Plate, control
6	12 089 17		Spring, governor
7	12 090 13		Lever, throttle control
8	12 112 07		Spacer, throttle control
9	SM–0642025		Screw, hex. flange M6x1.0x25
10	M–0641060		Nut, hex. flange M6x1.0
11	12 090 19		Lever, governor
12	25 158 11		Bushing, throttle
13	12 090 14		Lever, choke – upper
14	230117	2	Spring, linkage
15	12 079 04		Linkage, throttle
16	12 079 08		Linkage, choke – upper
17	25 158 08		Bushing, linkage
18	12 126 15		Bracket, choke mount
19	M–0545010		Screw, hex. flange M5x0.8x10

Ref. No.	Part No.	Qty.	Description

Kohler Engine CH12.5PS–1935
Obtain Parts From Kohler

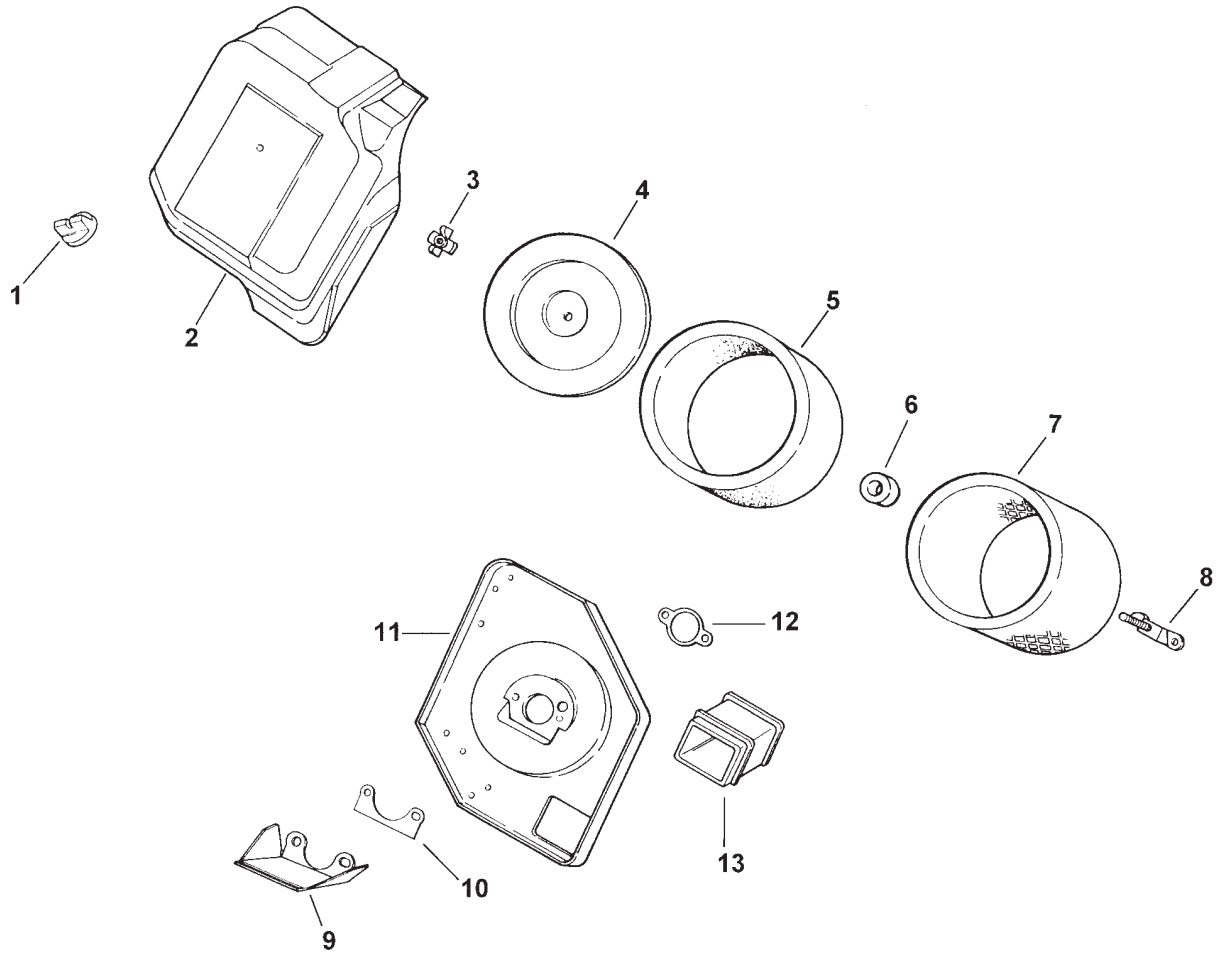

Air Intake / Filtration (Model 73429 Only)

Ref. No.	Part No.	Qty.	Description
1	25 341 03		Knob, cover
2	12 096 15		Cover, air cleaner
3	12 100 01		Wing Nut
4	12 096 35		Cover, air cleaner element with deflector
5	52 083 01		Precleaner, element
6	24 032 03		Seal, insert
7	47 083 01		Element, air cleaner
8	12 126 47		Bracket, air cleaner
9	12 146 14		Plate, air cleaner
10	12 041 09		Gasket, collector plate
11	12 094 06		Base, air cleaner
12	12 041 02		Gasket, air cleaner
13	12 123 07		Tube, air intake
			Not Illustrated
	12 113 04		Decal, air cleaner

Ref. No.	Part No.	Qty.	Description

Kohler Engine CH12.5PS–1935
Obtain Parts From Kohler

Exhaust (Model 73429 Only)

Ref. No.	Part No.	Qty.	Description
1	25 072 04 12 755 82	2	Stud M8x1.25x33 Gasket Set

Ref. No.	Part No.	Qty.	Description

Kohler Engine CH12.5PS–1935
Obtain Parts From Kohler

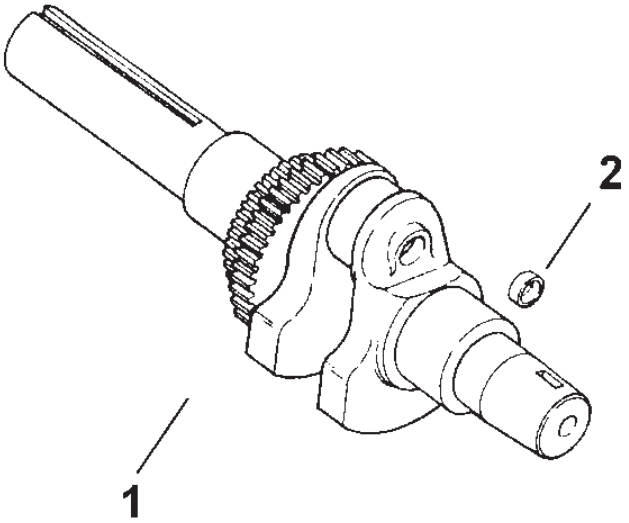

Crankshaft (Model 73449 Only)

Ref. No.	Part No.	Qty.	Description
1	12 014 48	2	Crankshaft (Incl. # 2)
2	12 139 01	2	Plug, cup

Ref. No.	Part No.	Qty.	Description

Kohler Engine CH14PS 1838
Obtain Parts From Kohler

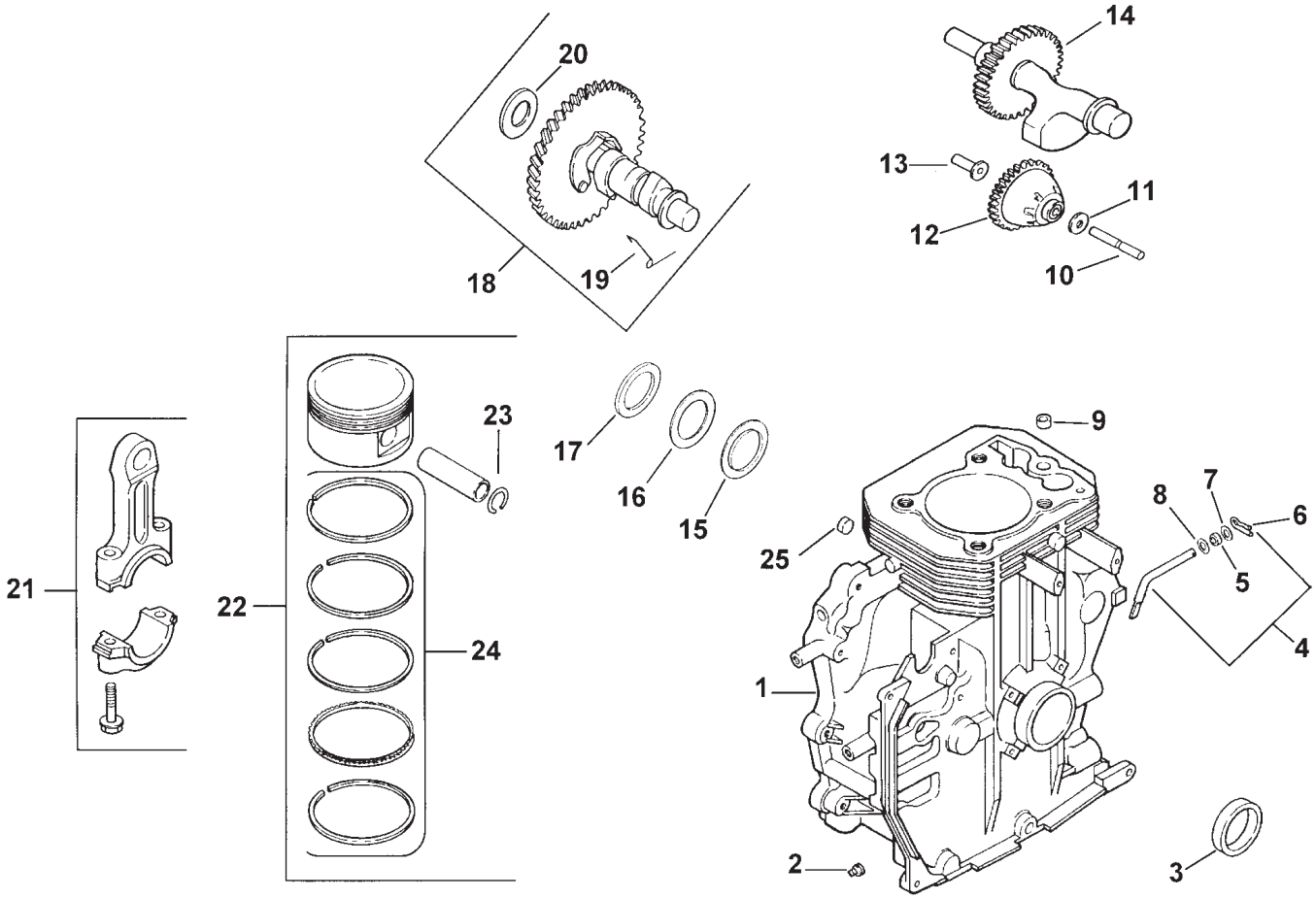

Crankcase (Model 73449 Only)

Ref. No.	Part No.	Qty.	Description
1		1	Short Block
2	X–75–10	2	Plug, solid sq. hd. 3/8
3	12 032 03		Seal, crankshaft
4	12 755 64	6	Kit, governor cross shaft (Includes # 6)
5	12 032 01		Seal, governor cross shaft
6	12 154 05		Clip, hitch pin
7	X–25–102		Washer, plain 1/4
8	M–0631015		Washer, plain 6 mm
9	12 380 17	4	Dowel, locating
10	12 144 02		Shaft, governor gear
11	M–0631005		Washer, plain 6 mm
12	12 043 05		Gear, governor
13	12 380 01		Pin, governor regulating
14	12 144 26		Shaft, balance
15	24 030 08		Bearing, thrust
16	52 114 04		Washer, thrust
17	24 422 04		Shim, thrust
18	12 755 50		Kit, camshaft (Includes
19	12 089 31		Spring, actuating
20	12 422 08		Shim, camshaft (A.R.) blue

Ref. No.	Part No.	Qty.	Description
	12 422 09		Shim, camshaft (A.R.) red
	12 422 10		Shim, camshaft (A.R.) yellow
	12 422 11		Shim, camshaft (A.R.) green
	12 422 12		Shim, camshaft (A.R.) gray
	12 422 13		Shim, camshaft (A.R.) black
	12 422 07	1	Shim, camshaft (A.R.) white
21	12 067 05		Connecting Rod (Std.)
	12 067 06		Connecting Rod (.25)
22	12 874 01		Piston w/Ring Set (Std.) (Includes 23,24)
	12 874 02		Piston w/Ring Set (.25)
	12 874 03		Piston w/Ring Set (.50)
23	12 018 02		Retainer, piston pin
24	12 108 01		Ring Set (Std.)
	12 108 02		Ring Set (.25)
	12 108 03		Ring Set (.50)
25	52 139 09		Plug, cup

Kohler Engine CH14PS–1838
Obtain Parts From Kohler

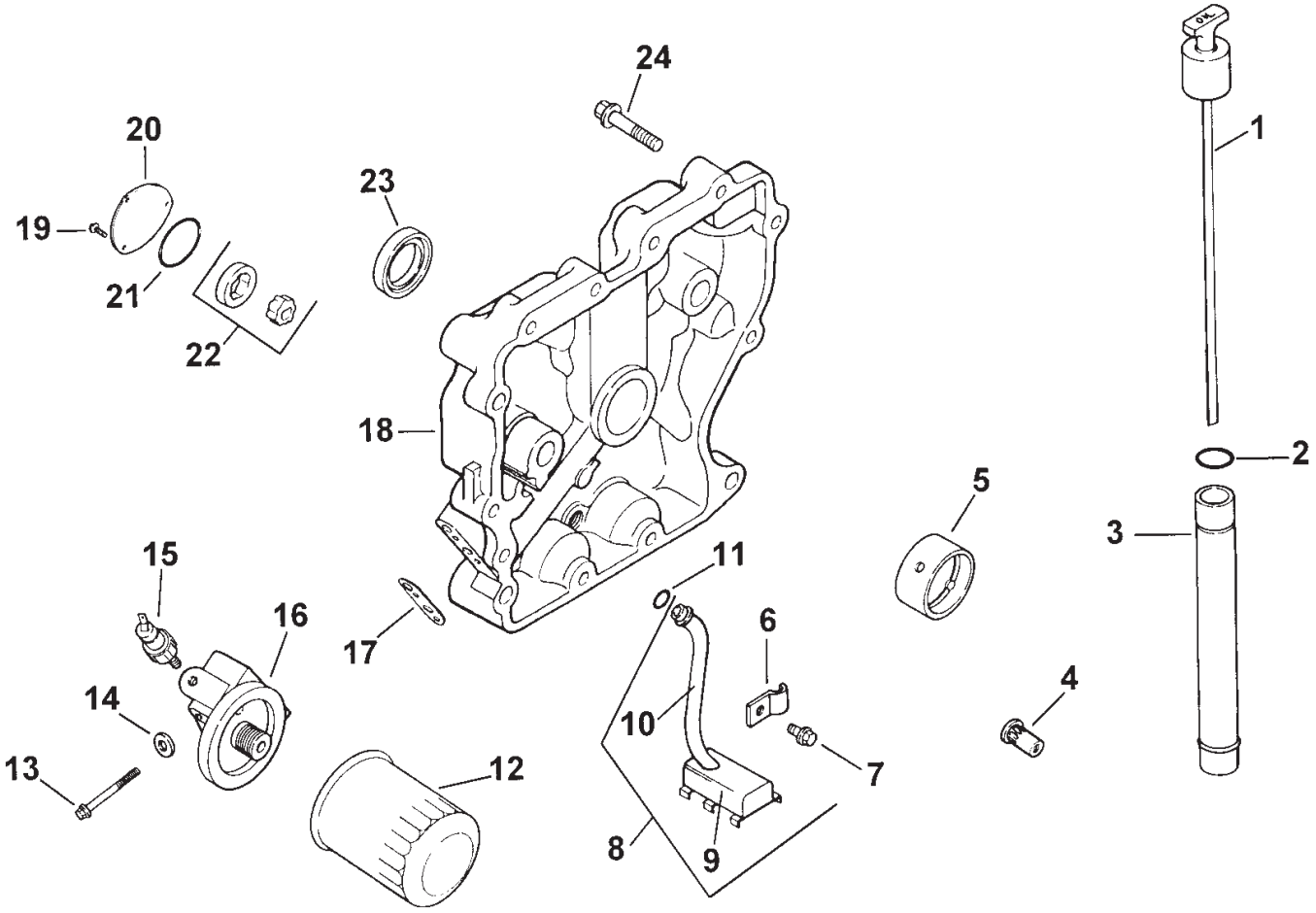

Oil Pan / Lubrication (Model 73449 Only)

Ref. No.	Part No.	Qty.	Description
1	47 038 26		Dipstick
2	41 153 01		O–Ring, oil fill tube
3	24 123 11		Tube, oil fill
4	25 462 09		Valve, oil pressure relief
5	12 030 05		Bearing, crankshaft
6	52 154 01		Clip
7	M–0545016		Screw ,hex.flange M5x0.8x16
8	12 755 73		Kit, oil pick–up (Includes 9,10)
9	25 381 01		Pick–up, oil screen
10	12 123 21		Tubing, oil pick–up
11	12 153 04		O–Ring, oil pick–up
12	52 050 02		Filter, oil
13	M–0651060	2	Screw, hex. flange M6x1.0x60
14	X–25–12	2	Washer, plain 1/4
15	25 029 24		Swutch, oil pressure
16	12 029 01		Adapter, oil filter
17	12 041 07		Gasket, oil filter adapter
18	1200936		Plate, closure Asm (Includes 4,5,19–22)
19	M–0545016	3	Screw, hex. flange M5x0.8x16

Ref. No.	Part No.	Qty.	Description
20	12 096 21		Cover, oil pump
21	12 153 05		O–Ring, oil pump cover
22	12 393 01		Pump, oil
23	12 032 03		Seal, oil (P.T.O. end)
24	24 086 16	11	Screw, hex. flange M8x1.25x45
24	24 086 17		Screw, hex. flange M8x1.25x45
			Not Illustrated
	25 113 05		Decal, oil sentry

Kohler Engine CH14–1838
Obtain Parts From Kohler

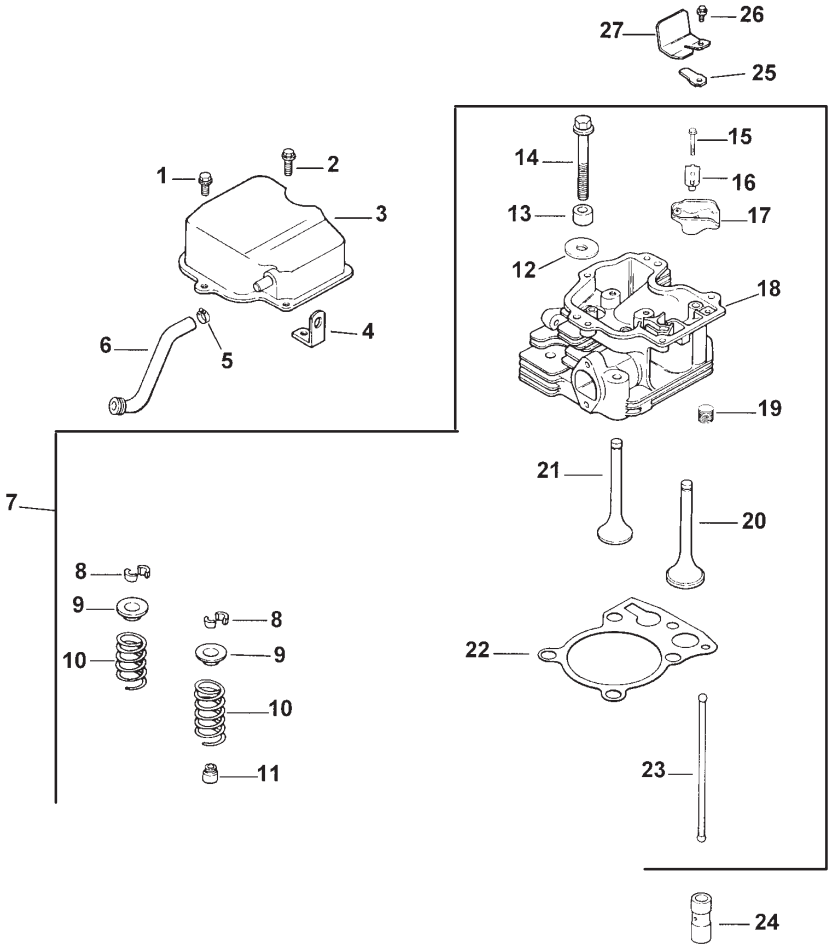

Cylinder Head / Valve And Breather (Model 73449 Only)

Ref. No.	Part No.	Qty.	Description
1	M–0645020	4	Screw, hex. flange M6x1.0x20
2	M–0645025		Screw, hex. flange M6x1.0x25
3	12 096 07		Cover, valve w/nipple
4	12 445 05		Strap, lifting (PTO side)
5	X–426–9		Clamp, hose
6	12 326 09		Hose, breather
7	12 041 01		Kit, cylinder head (Includes 8–23,
	12 041 02	2	carburetor gasket , air cleaner, base gasket,
	12 041 03		& exhaust manifold
	12 755 81		gasket)
8	12 755 03	2	Kit, retainer
9	12 173 01	2	Cap, valve spring
10	12 089 01	2	Spring, valve
11	24 032 05	2	Seal, valve stem
12	12 468 05		Washer, plain 13/32
13	12 112 13		Spacer, head bolt exhaust port
14	12 086 15	5	Screw, hex. flange M10x1.5x81
15	M–0640034	2	Screw, hex. flange M6x1.0x34

Ref. No.	Part No.	Qty.	Description
16	12 599 03	2	Pivot, rocker arm
17	25 186 01	2	Arm, rocker
18	12 318 19		Head, cylinder
19	X–75–23		Plug, allen hd. 1/8 pipe
20	12 017 01		Valve, intake (Std.)
21	12 016 01		Valve, exhaust (Std.)
22	12 041 08		Gasket, cylinder head
23	12 411 01	2	Rod, push
24	12 351 02	2	Lifter, valve
25	12 402 02		Reed, breather
26	M–0545010		Screw, hex. flange M5x0.8x10
27	12 018 03		Retainer, breather reed
			Not Illustrated
	12 017 02		Valve, intake (.25)
	12 016 02		Valve, exhaust (.25)

Kohler Engine CH14PS–1838
Obtain Parts From Kohler

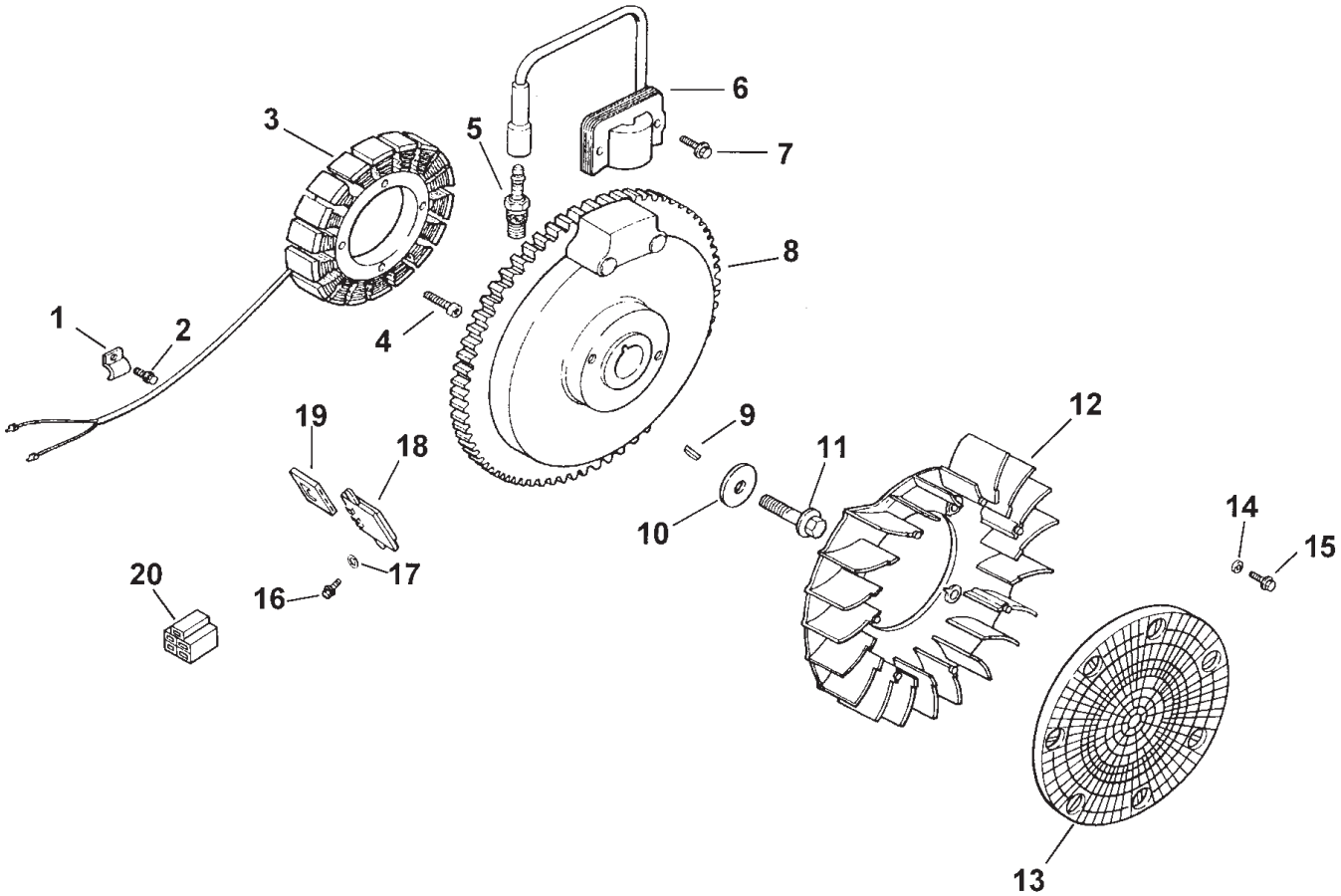

Ignition / Electrical (Model 73449 Only)

Ref. No.	Part No.	Qty.	Description
1	X–728–1	2	Clip
2	M–0545010	2	Screw, hex. flange M5x0.8x10
3	24 126 71		Kit, 15 amp stator (Includes
	54 755 09		Bracket).
4	M–0548025	2	Screw, hex. cap M5x0.8x25
5	12 132 02		Spark Plug
6	12 584 04		Module, ignition
7	M–0545020	2	Screw, hex. flange M5x0.8x20
8	12 025 15		Flywheel
9	X–42–15		Key
10	12 468 03		Washer, plain 3/8
11	12 086 14		Screw, hex. flange M10x1.5x46
12	12 157 03		Fan
13	24 162 03		Screen, grass
14	12 112 01	4	Spacer, fan
15	M–0639016	4	Screw, hex. flange M6x1.0x16
16	M–0639016	2	Screw, hex. flange M6x1.0x16
17	X–22–11		Washer, lock 1/4”
18	41 403 09		Rectifier–regulator

Ref. No.	Part No.	Qty.	Description
19	236602		Connector
20	48 155 01		Connector
			NOT ILLUSTRATED
	25 518 29		Lead, black (6” – 18 gauge – insulated grip barrel eyelet terminals)
	12 518 01		Lead, white, ground to kill (19” – 18 gauge – insulated push on tab, uninsulated push on tab terminals)
	25 518 05		Lead, black, rectifier–regulator (5” – 14 gauge – uninsulated push on tab terminals)
	24 126 71		Bracket, stator wire

Kohler Engine CH14PS–1838
Obtain Parts From Kohler

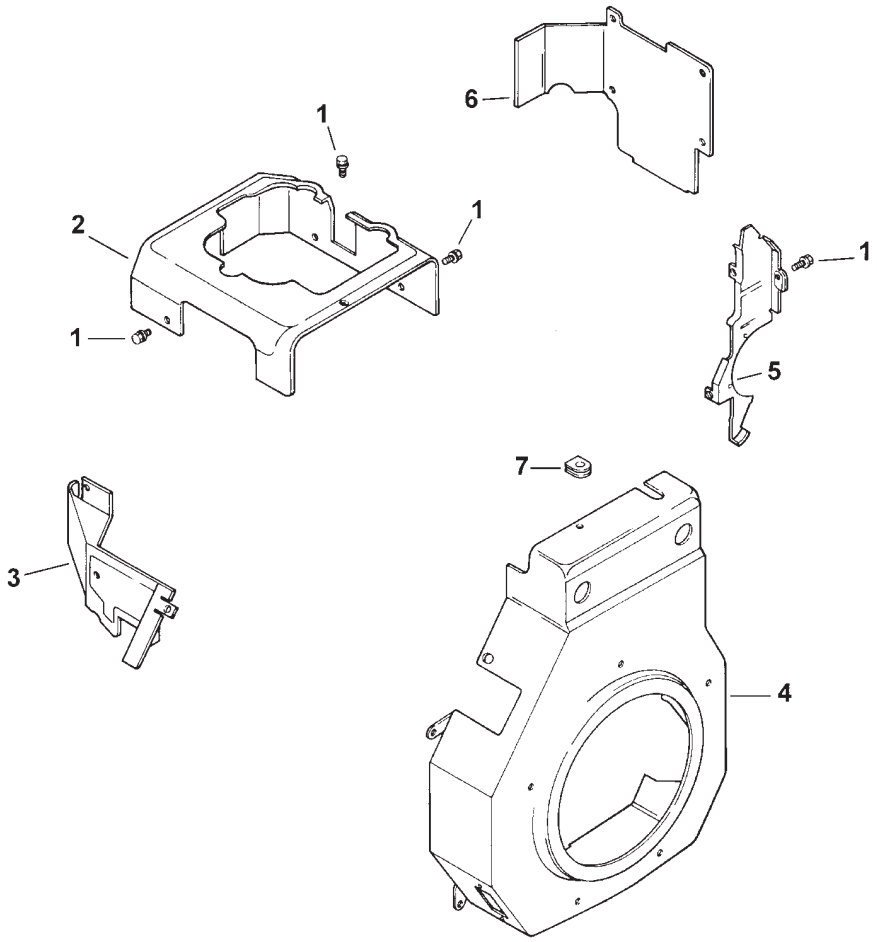

Blower Housing And Baffles (Model 73449 Only)

Ref. No.	Part No.	Qty.	Description
1	M–0545010	14	Screw, hex. flange M5x0.8x10
2	12 063 08		Baffle, cylinder head
3	12 063 05		Baffle, intake side
4	12 027 39		Housing, blower
5	12 146 07		Plate, blower housing
6	12 063 01		Baffle, cylinder barrel
7	12 313 03		Grommet, blower housing
			Not Illustrated
	12 113 30		Decal, HP

Ref. No.	Part No.	Qty.	Description

Kohler Engine CH14PS–1838
Obtain Parts From Kohler

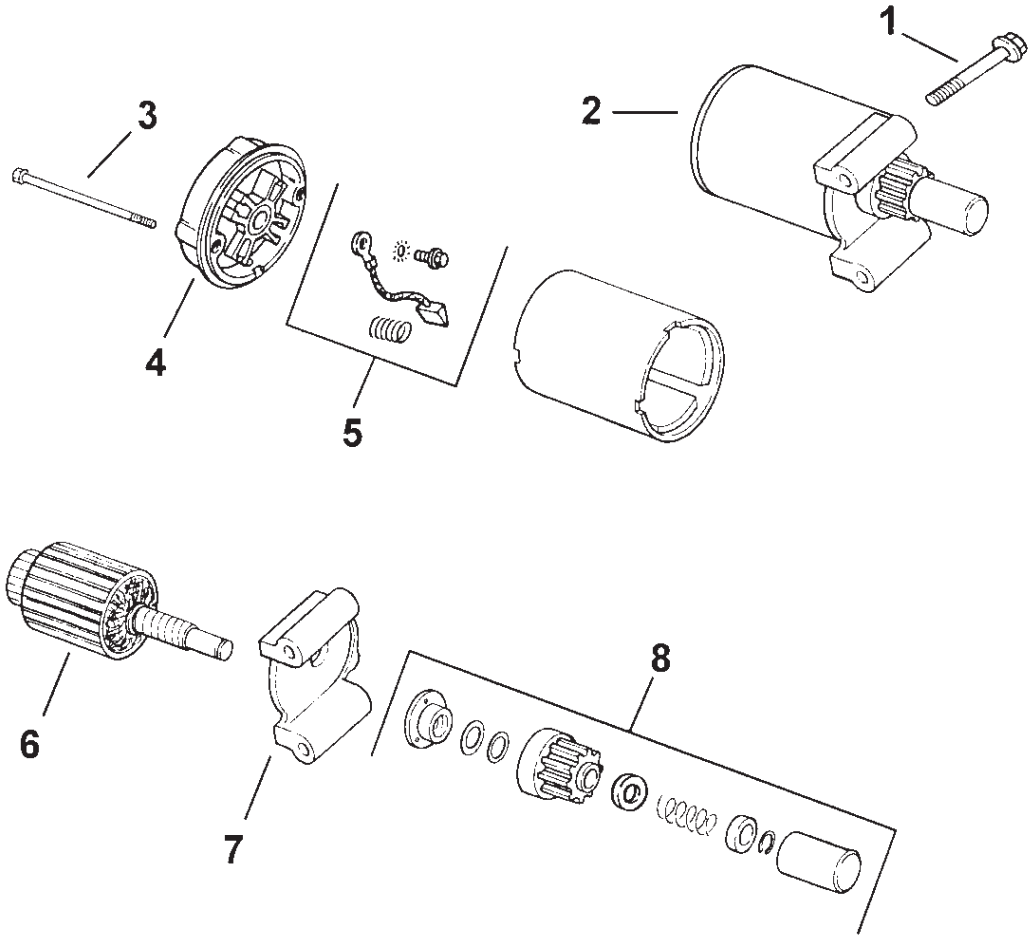

Starter (Model 73449 Only)

Ref. No.	Part No.	Qty.	Description
1	M–0839070D	2	Screw, hex. flange M8x1.25x70
2	12 098 12		Starter assembly (Includes 3–8)
3	12 086 25	2	Screw, hex. flange 1/4–20x4–5/8
4	12 227 10		Cap, commutator end
5	82 755 28		Kit, brush & spring
6	45 170 03		Armature
7	12 227 05		Cap, drive end
8	12 755 53		Kit, drive

Ref. No.	Part No.	Qty.	Description

Kohler Engine CH14PS–1838
Obtain Parts From Kohler

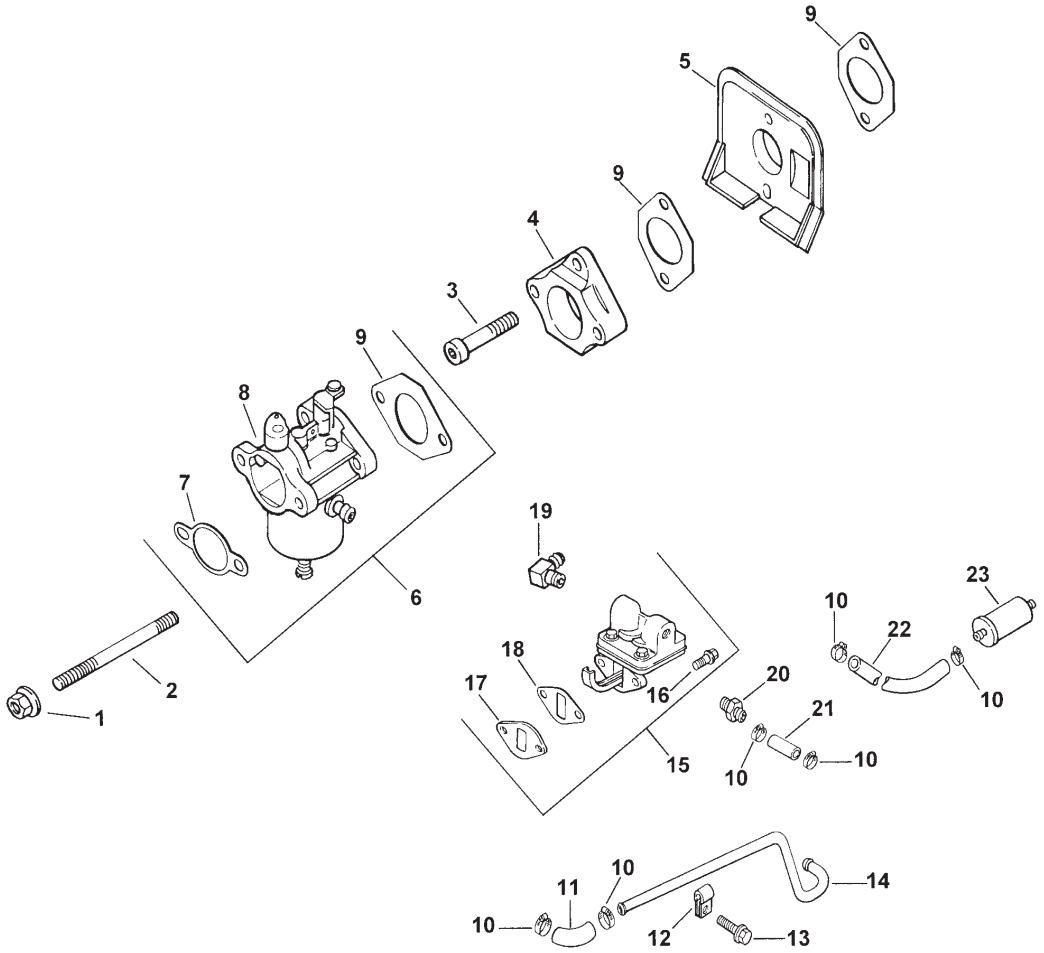

Carburetor And Fuel Pump (Model 73449 Only)

Ref. No.	Part No.	Qty.	Description
1	M–0641060	2	Nut, hex. flange M6x1.0
2	M–0629085	2	Stud M6x1.0x85
3	M–0644035	2	Screw, hex. socket cap M6x1.0x35
4	12 029 04		Adapter, carburetor
5	12 265 04		Deflector, heat
6	12 853 60	1	Kit, carburetor w/gaskets (Incl. 7–90)
7	12 041 02		Gasket, air cleaner
8	12 053 60		Carburetor assembly (For information only not available separately) (Service with parts listed under ”Not Illustrated”)
9	12 041 01	3	Gasket, carburetor
10	X–426–9	6	Clamp, hose
11	12 353 07		Line fuel
12	12 154 01		Clip, tube
13	M–0545010		Screw, hex. flange M5x0.8x10
14	12 353 11		Line, fuel – metal
15	12 559 01		Kit, fuel pump (Includes 16–18)
16	M–0645020	2	Screw, hex. flange M6x1.0x20
17	12 112 05		Spacer
18	25 041 09	2	Gasket, fuel pump
19	25 155 02		Connector, 90_ hose

Ref. No.	Part No.	Qty.	Description
20	X–380–1		Connector, straight hose
21	12 353 01		Line, fuel 1–1/4”
22	25 353 02		Line, fuel 3”
23	25 050 02		Filter, fuel
			NOT ILLUSTRATED
	12 368 05		Needle, idle fuel adjusting
	12 089 09	2	Spring, idle adjusting
	12 086 04		Screw, idle speed adjusting
	12 146 03		Plate, throttle
	25 086 27	2	Screw, throttle plate
	12 144 09		Shaft, throttle w/lever & seal
	12 337 04		Jet, main
	12 757 08		Kit, choke repair
	12 146 12		Plate, choke
	12 173 06		Cap, choke lever
	25 086 27	2	Screw, choke plate
	12 757 02		Kit, float
	12 041 05		Gasket, bowl
	12 104 01		Bowl, fuel
	12 086 05		Screw, fuel bowl retainer
	12 041 06		Gasket, bowl retainer screw
	12 757 03		Kit, carburetor repair

Kohler Engine CH14PS–1838
Obtain Parts From Kohler

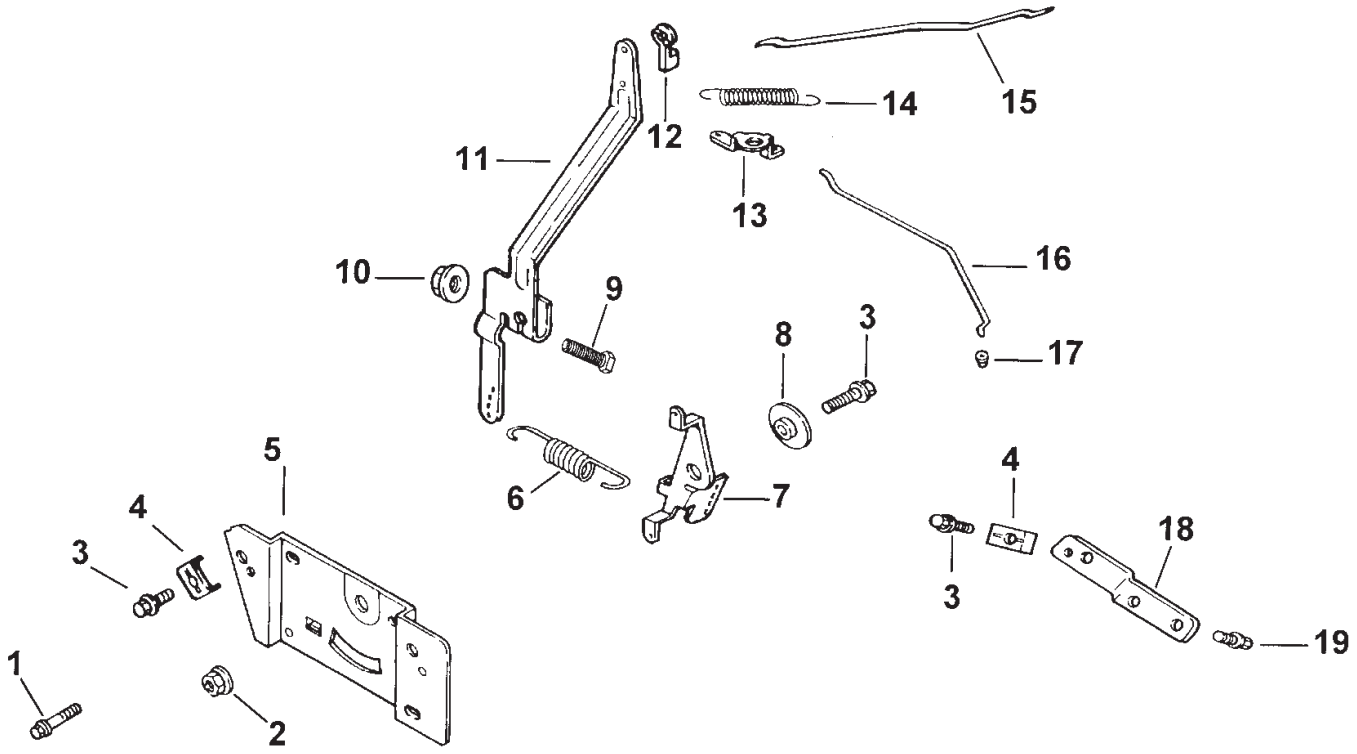

Engine Controls (Model 73449 Only)

Ref. No.	Part No.	Qty.	Description
1	M–0664020	2	Screw, lobed socket M6x1.0x20
2	M–0541050		Nut, hex. flange M5x0.8
3	M–0545016	4	Screw, hex. flange M5x0.8x16
4	12 237 01	3	Clamp, cable
5	12 146 05		Plate, control
6	12 089 17		Spring, governor
7	12 090 13		Lever, throttle control
8	12 112 07		Spacer, throttle control
9	SM–0642025		Screw, hex. flange M6x1.0x25
10	M–0641060		Nut, hex. flange M6x1.0
11	12 090 19		Lever, governor
12	25 158 11		Bushing, throttle
13	12 090 14		Lever, choke – upper
14	230117	2	Spring, linkage
15	12 079 04		Linkage, throttle
16	12 079 08		Linkage, choke – upper
17	25 158 08		Bushing, linkage
18	12 126 15		Bracket, choke mount
19	M–0545010		Screw, hex. flange M5x0.8x10

Ref. No.	Part No.	Qty.	Description

Kohler Engine CH14PS–1838
Obtain Parts From Kohler

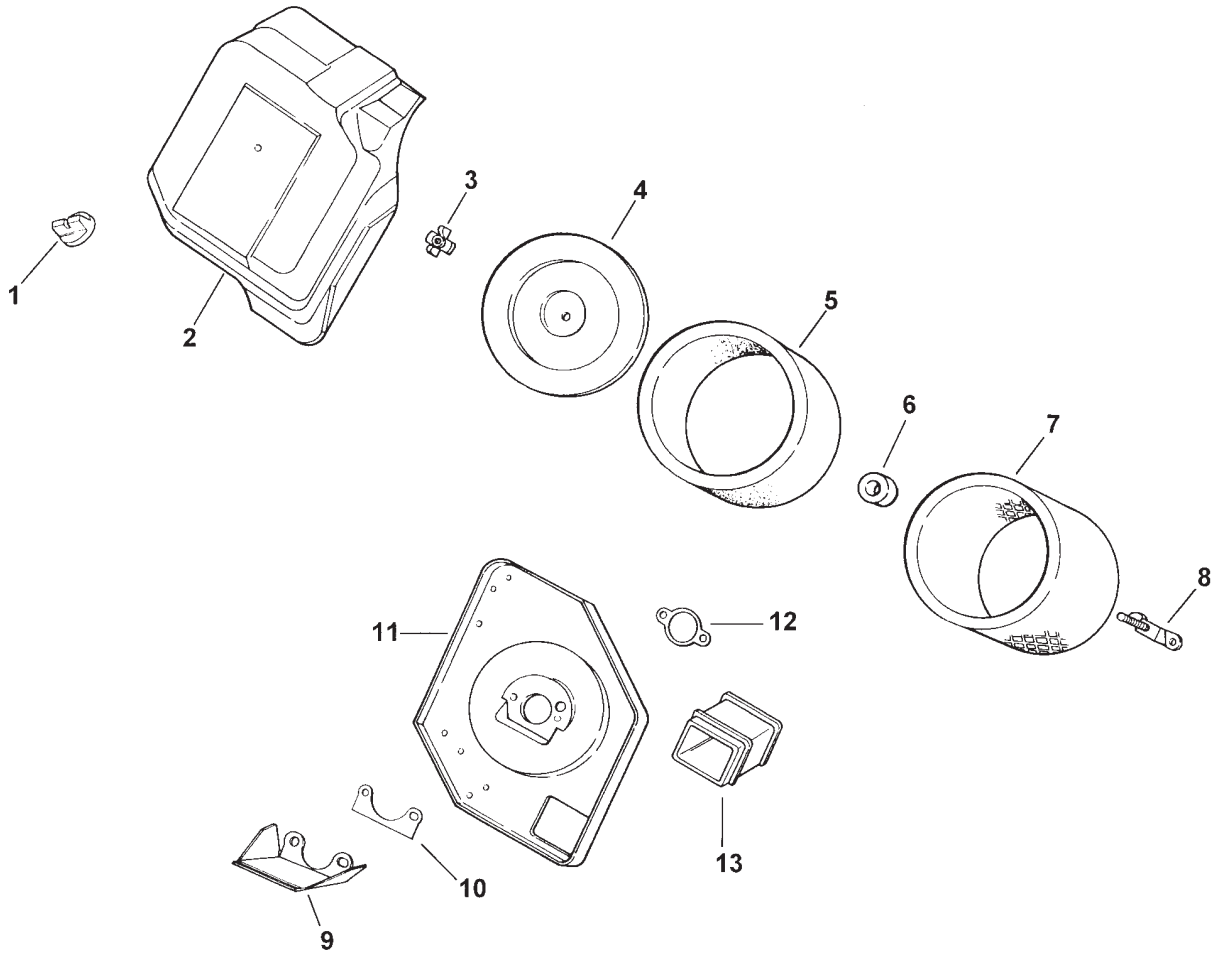

Air Intake / Filtration (Model 73449 Only)

Ref. No.	Part No.	Qty.	Description
1	25 341 03		Knob, cover
2	12 096 15		Cover, air cleaner
3	12 100 01		Wing Nut
4	12 096 35		Cover, air cleaner element with deflector
5	52 083 01		Precleaner, element
6	24 032 03		Seal, insert
7	47 083 01		Element, air cleaner
8	12 126 47		Bracket, air cleaner
9	12 146 14		Plate, air cleaner
10	12 041 09		Gasket, collector plate
11	12 094 06		Base, air cleaner
12	12 041 02		Gasket, air cleaner
13	12 123 07		Tube, air intake
			Not Illustrated
	12 113 04		Decal, air cleaner

Ref. No.	Part No.	Qty.	Description

Kohler Engine CH14PS–1838
Obtain Parts From Kohler

Exhaust (Model 73449 Only)

Ref. No.	Part No.	Qty.	Description
1	25 072 04	2	Stud M8x1.25x33
	12 755 82		Gasket Set

Ref. No.	Part No.	Qty.	Description

Kohler Engine CH14PS–1838
Obtain Parts From Kohler

Maintenance Record

Date								

Maintenance Record

Date								

TORO®