Form No. 3424-247 Rev B

TORO®

Count on it.

Parts Catalog

Dust-Control 66in Rake-O-Vac®

Sweeper

Model No. 07055—Serial No. 403250001 and Up

Register at www.Toro.com.
Original Instructions (EN)

CE

3424-247 B

Ordering Replacement Parts

To order replacement parts, please supply the part number, the quantity, and the description of each part desired.

Understanding Reference Numbers

Each identified part in an illustration has a reference number. The reference number for a part also appears in the parts list, along with other information about the part.

This catalog uses two special reference number formats, one to indicate parts in a service assembly and another to indicate the quantity of a given part in an illustration.

Service Assembly Reference Numbers

Parts in service assemblies have reference numbers in the form a:b. The a represents the reference number of the entire service assembly and the b represents a sequential number unique to each part within the service assembly.

For example, a wheel assembly might be identified by reference number 6, the tire by 6:1, the valve by 6:2, and the wheel by 6:3. When you order the assembly identified by reference number 6, you receive all parts identified by reference numbers 6:1,6:2, and 6:3. However, you may also order any part individually. Reference numbers of this type appear in illustration and in parts lists.

Reference Numbers Indicating Quantity

In an illustration, if a reference number indicates more than one part, the reference number has the form nX y. The n represents the quantity of the part, the X is the multiplication symbol, and the y represents the reference number.

For example, in an illustration, the reference number 2X 37 means that two of the parts identified by reference number 37 are indicated.

Contents

Frame and Tire Assembly 4
Wheel Hub Assembly 5
Frame Decal Assembly 6
Blower and Throat Assembly 7
Blower and Throat Assembly Decal Assembly 8
Blower Fan and Throat Flap Assembly 9
Rake and Trailing Arm Assembly 10
LH Trailing Arm Assembly No. 117-8470 11
Rake Assembly 12
Right Hand Trailing Arm Assembly 13
RH Trailing Arm Assembly No. 117-8460 14
Engine, Clutch and Muffler Assembly 15
Centrifugal Clutch Assembly No. 107-1050 17
Clutch Assembly No. 107-1070 18
Guard Assembly 19
Battrey and Fuel System Assembly 20
Fuel Tank Assembly No. 115-9047 21
Hopper and Hood Assembly 22
Hopper Assembly No. 120-6170 24
Hopper Frame Assembly No. 120-6150 26
Hopper Roof Assembly No. 131-9360 27
Screen Floor Assembly No. 125-5955 28
Attachments and Accessories 29

© 2020—The Toro® Company
8111 Lyndale Avenue South
Bloomington, MN 55420

Contact us at www.Toro.com.
Printed in the USA.
All Rights Reserved

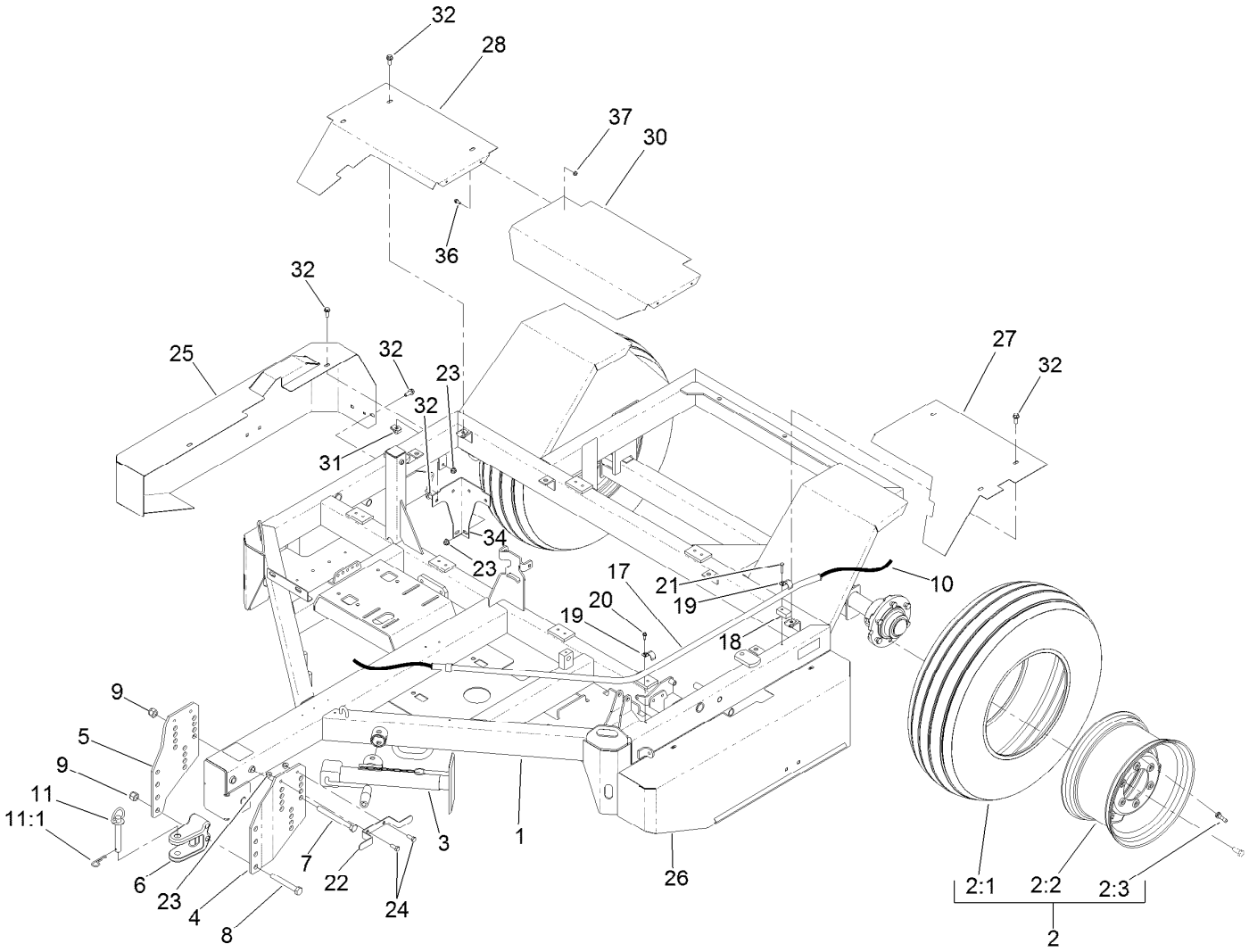

Frame and Tire Assembly

Ref.	Part Number	Qty.	Description
1	120-6049	1	Frame And Axle ASM
2	119-6224	2	Wheel And Tire ASM
2:1	119-6225	1	Tire
2:2	119-6226	1	Wheel
2:3	232-27	1	Stem-Valve
3	T0000-3423	1	Jack-Sidewind
4	110-7518-03	1	Plate-Hitch, LH
5	110-7519-03	1	Plate-Hitch, RH
6	131-4381-01	1	Hitch-Clevis
7	327-17	3	Screw-HH
8	327-12	2	Screw-HH
9	3296-53	5	Nut-Lock, NI
10	20-9580	1	Rope-Latch
11	13-6200	1	Pin-Hitch, Pointed
11:1	3290-343	1	Pin-Hair
17	13-6890-01	1	Guide-Rope
18	13-6910-01	1	Spacer-Guide, Rope

Ref.	Part Number	Qty.	Description
19	2412-40	3	Clamp-Conduit
20	32104-95	2	Screw-HWH
21	32104-96	1	Screw-HH
22	106-0262-01	1	Mount-Harness
23	104-8301	8	Nut-HF, NI
24	323-6	2	Screw-HH
25	121-2778-03	1	Guard-Belt
26	121-2784-03	1	Guard-Foot
27	121-2682-03	1	Guard-Brush, LH
28	121-2683-03	1	Cover-Brush, RH
30	121-2686-03	1	Cover-Brush, Center
31	105-4886	10	Nut-Tinnerman
32	110-5052	16	Screw-HHF
34	121-2706-03	2	Support-Cover
36	3234-33	4	Screw-HHF
37	104-7201	4	Nut-HF

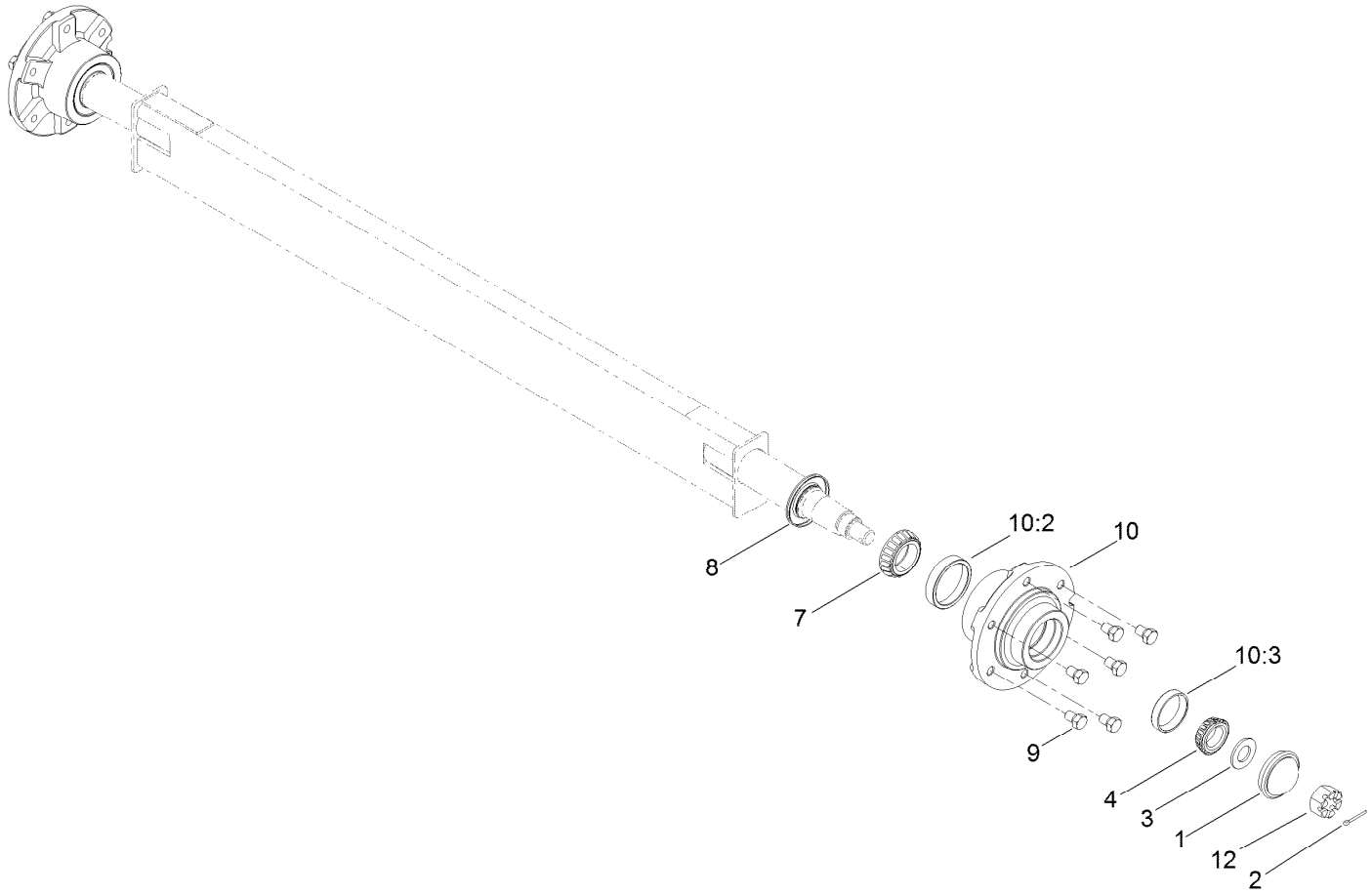

Wheel Hub Assembly

Ref.	*Part Number*	*Qty.*	*Description*
1	217-111	2	Cap-Hub
2	3272-17	2	Pin-Cotter
3	3256-29	2	Washer-Flat
4	254-62	2	Bearing-Roller, Cone
7	254-65	2	Bearing-Roller, Cone
8	253-127	2	Seal
9	217-103	12	Bolt-Wheel
10	117-8535	2	Hub-Cupped
10:2	254-66	1	Cup-Bearing, Roller
10:3	254-61	1	Cup-Bearing, Roller
12	32136-1	2	Nut-Slotted

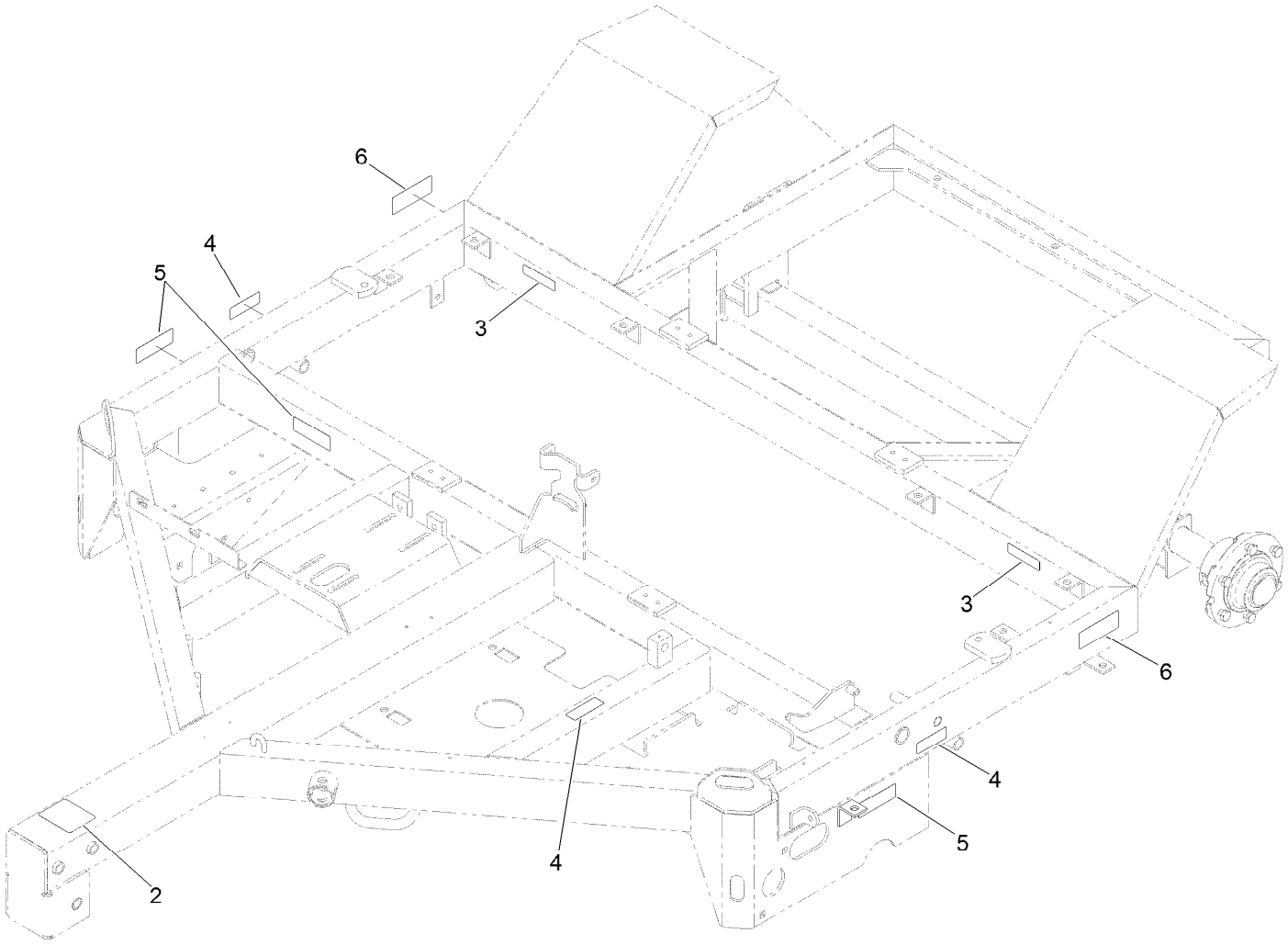

Frame Decal Assembly

Ref.	*Part Number*	*Qty.*	*Description*
2	121-2836	1	Plate-Hitch, Caution
3	119-0217	2	Decal-Danger
4	120-0625	3	Decal-Warning
5	117-4979	3	Decal-Warning
6	121-2840	2	Decal-Caution

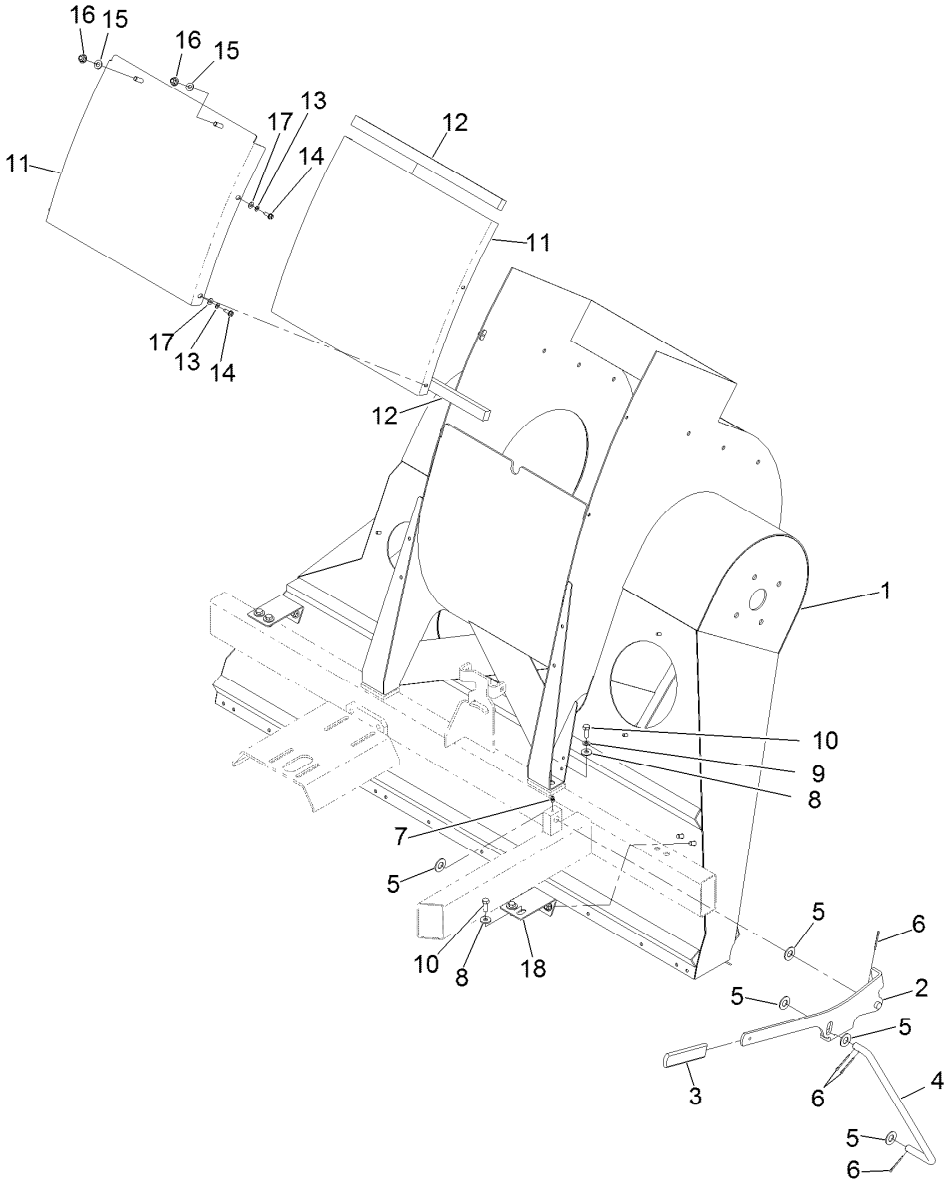

Blower and Throat Assembly

Ref.	Part Number	Qty.	Description
1		1	Blower And Throat ASM ●
2	120-5965-03	1	Handle-Flap
3	105-3450	1	Grip-Lever, Lift
4	120-5966	1	Rod-Flap Lift
5	3256-27	5	Washer-Flat
6	3272-13	4	Pin-Cotter
7	302-5	1	Fitting-Grease
8	80-6990	16	Washer-Hardened
9	3253-21	12	Washer-Lock

Ref.	Part Number	Qty.	Description
10	323-6	16	Screw-HH
11	119-6442-01	1	Door-Access
12	93-7708	2	Strip-Seal
13	3253-3	4	Washer-Lock
14	32104-95	4	Screw-HWH
15	3256-24	2	Washer-Flat
16	104-8301	6	Nut-HF, NI
17	3256-22	4	Washer-Flat
18	133-8453-01	2	Mount-Blower, Front

● Not serviced separately

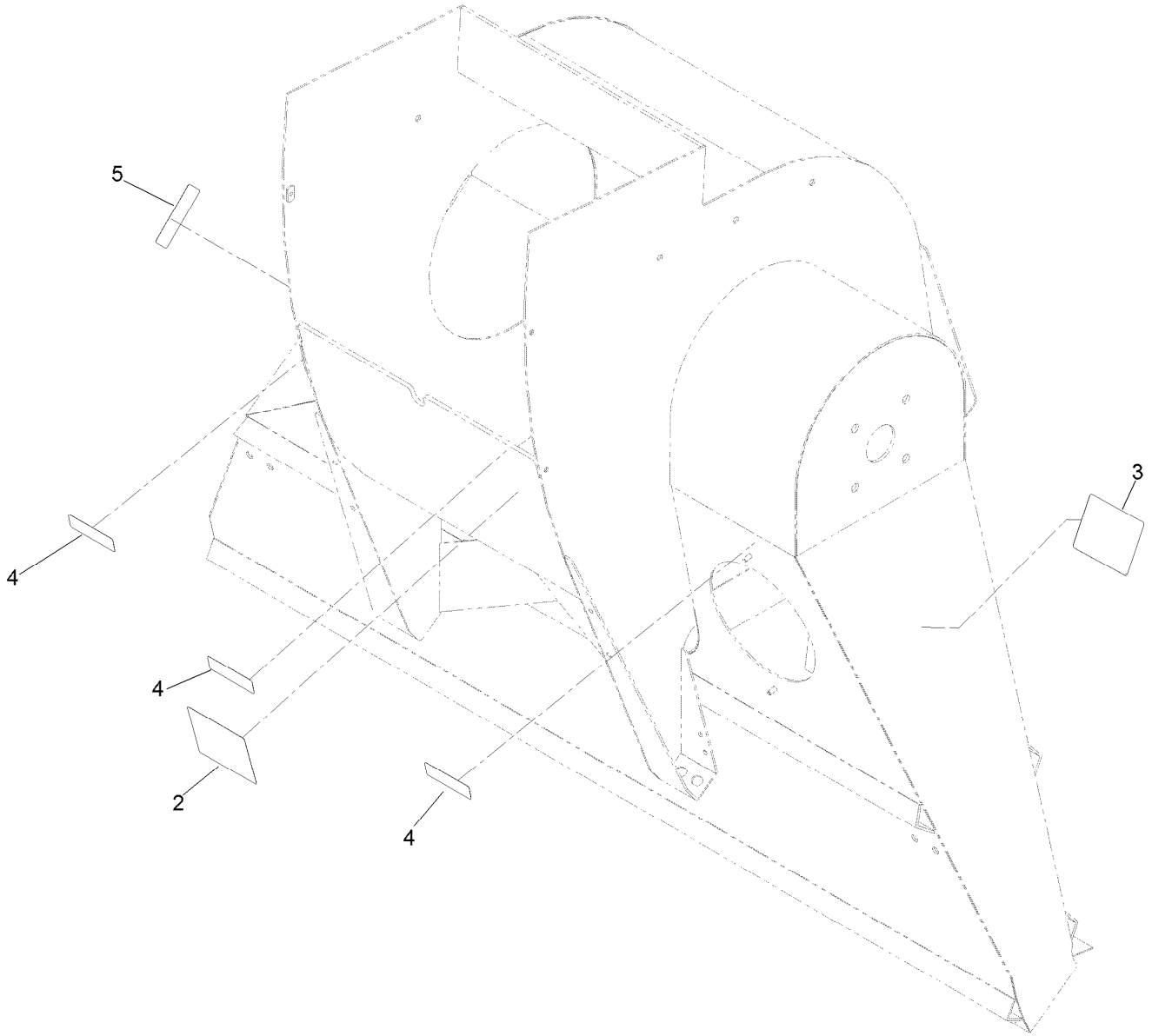

Blower and Throat Assembly Decal Assembly

Ref.	*Part Number*	*Qty.*	*Description*
2	121-2839	1	Decal-Caution
3	121-2842	1	Decal-Instruction
4	121-2843	3	Decal-Warning
5	117-4979	1	Decal-Warning

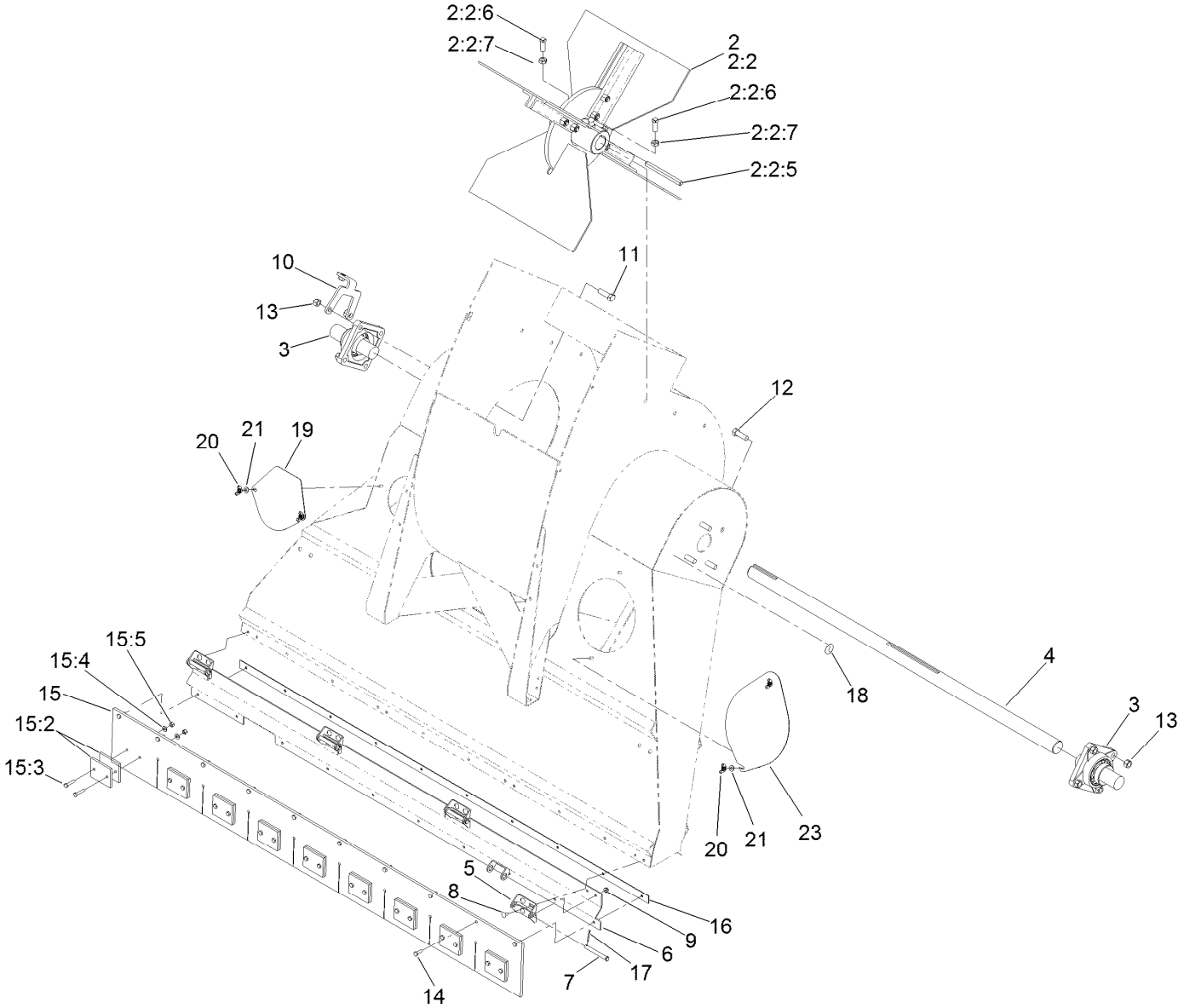

Blower Fan and Throat Flap Assembly

Ref.	Part Number	Qty.	Description
2	13-3420-03	1	Fan ASM
2:2		1	Fan ●
2:2:5	13-2810	1	Square Key
2:2:6	3244-14	4	Screw-Set, SQH
2:2:7	3218-5	4	Nut-Jam
3	56-6220	2	Bearing
4	13-3790	1	Fan Shaft
5	107-1549	8	Hinge-Half
6	120-5960-03	1	Flap-Blade, Lower
7	80-2570	4	Pin-Clevis
8	3229-11	16	Screw-CARR
9	104-7201	26	Nut-HF
10	108-0893-03	1	Mount-Guard, Fan
11	325-7	4	Screw-HH
12	325-6	4	Screw-HH

Ref.	Part Number	Qty.	Description
13	32153-5	8	Nut-Hex
14	321-5	10	Screw-HH
15	13-4700	1	Lower Flap ASM
15:2	13-4560-03	18	Weight-Flap
15:3	321-8	18	Screw-HH
15:4	3256-22	18	Washer-Flat
15:5	3296-42	18	Nut-Lock, NI
16	13-1390-03	1	Flap Retainer
17	3272-11	4	Pin-Cotter
18	121-2844	1	Decal-Indicator, Rotation
19	13-1420-01	1	Cover-Inspection
20	32103-12	4	Nut-Wing
21	3256-22	4	Washer-Flat
23	93-4020-01	1	Cover-Inspection

● Not serviced separately

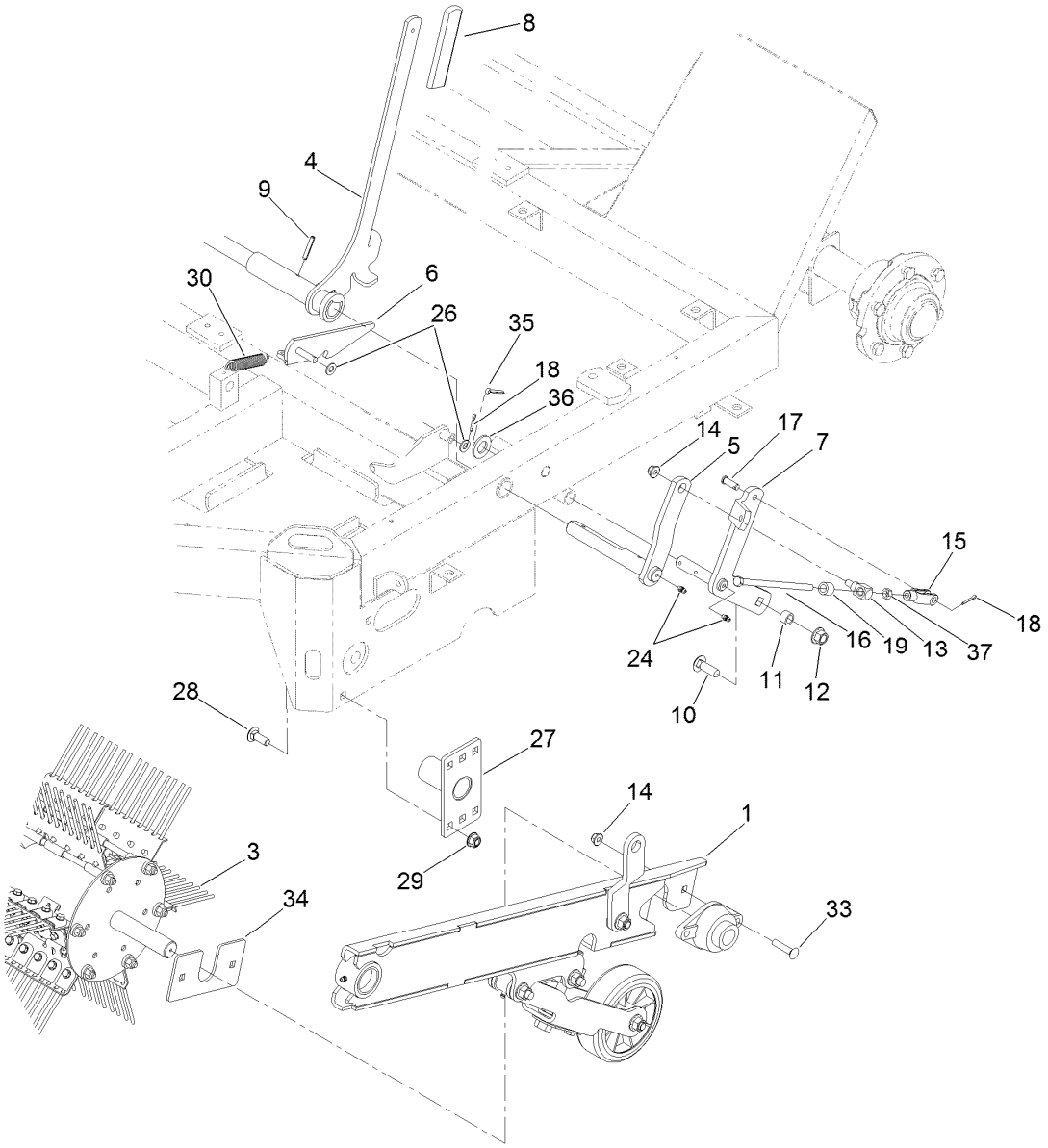

Rake and Trailing Arm Assembly

Ref.	Part Number	Qty.	Description
1	117-8470	1	LH Trailing Arm ASM
3		1	Flex Tip Reel ASM ●
4	119-6200-03	1	Handle-Lift
5	119-2994	2	Crank-Lifting, Rake
6	117-8490-03	1	Handle-Trip
7	117-8503-03	1	Crank-Bell, Lifting LH
8	105-3450	1	Grip-Lever, Lift
9	32121-15	2	Pin-Roll
10	3233-2	1	Screw-CARR
11	119-6188	1	Tube-Pivot
12	99-5107	1	Nut-Lock
13	13-0100	2	Pivot-Link, Rake Lift
14	104-8301	4	Nut-HF, NI
15	282-22	2	Clevis
16	27-7900	2	Screw-Adjusting
17	283-2	2	Pin-Clevis
18	3272-10	3	Pin-Cotter
19	95-8603	2	Spacer
24	302-5	4	Fitting-Grease
26	3256-24	2	Washer-Flat
27	117-8506-03	1	Mount-Guard
28	3232-3	2	Bolt-CARR
29	114-8417	2	Nut-HF, NI
30	13-0480	1	Spring
33	3231-29	2	Screw-CARR
34	119-6217-03	1	Support-Arm, Trailing
35	3272-22	1	Pin-Cotter
36	3256-28	1	Washer-Flat
37	3219-3	2	Nut-Hex

● Not serviced separately

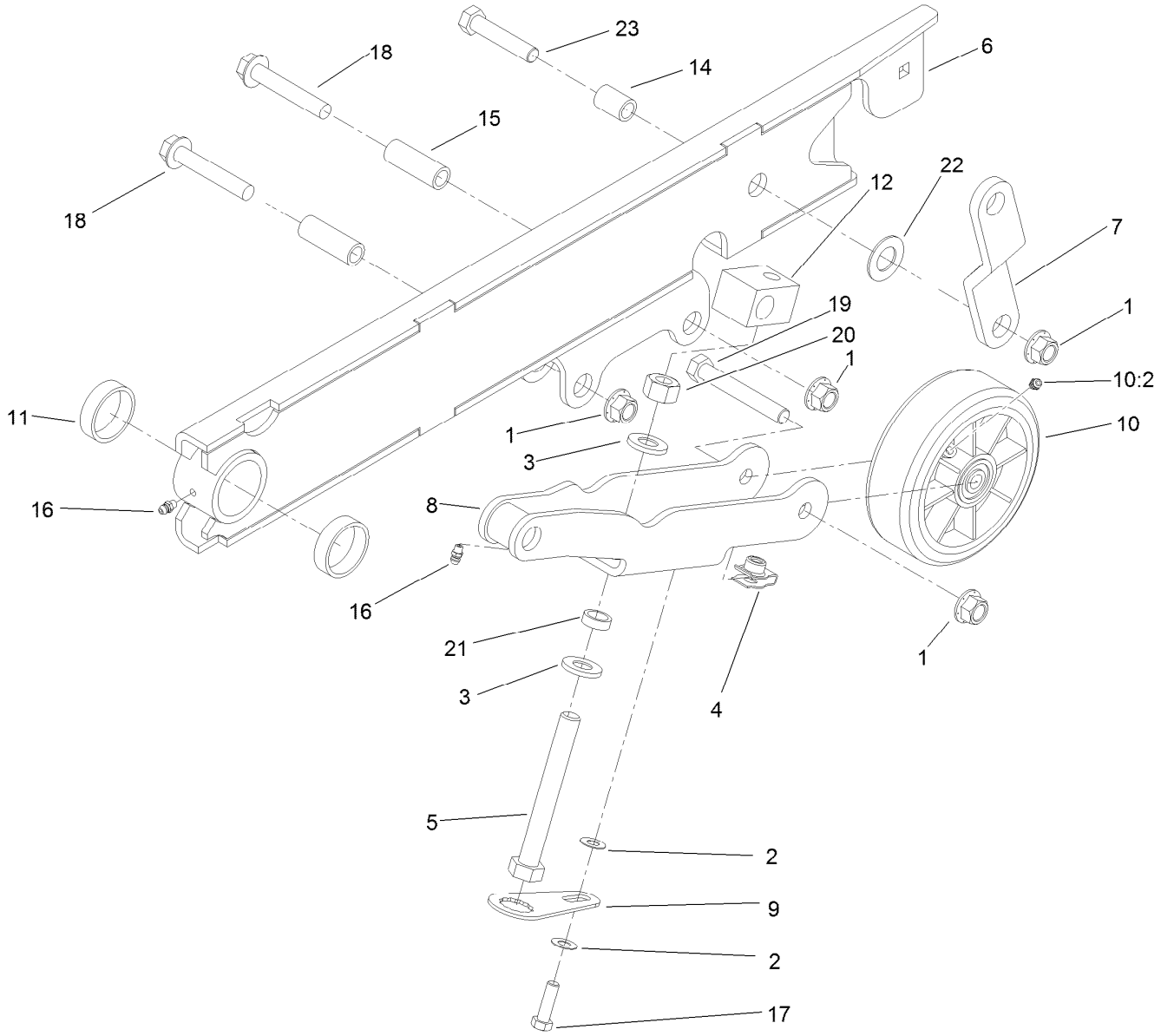

LH Trailing Arm Assembly No. 117-8470

Ref.	Part Number	Qty.	Description
1	99-5107	4	Nut-Lock
2	108-1438	2	Washer-Hardened
3	99-7667	2	Washer-Flat
4	105-4886	1	Nut-Tinnerman
5	112-4874	1	Screw-HH, TAP
6	120-5905-03	1	Arm-Trailing
7	117-8465-03	1	Link-Lift
8	119-6301-03	1	Arm-Gauge, Wheel
9	117-8484	1	Tab-Locking
10	117-8544	1	Wheel-Caster
10:2	302-5	1	Fitting-Grease
11	119-2985	2	Bushing

Ref.	Part Number	Qty.	Description
12	119-6184	1	Block-Pivot
14	119-6191	1	Tube-Pivot
15	119-6192	2	Tube-Pivot
16	302-5	2	Fitting-Grease
17	323-6	1	Screw-HH
18	3234-40	2	Screw-HF
19	325-14	1	Screw-HH
20	3217-11	1	Nut-Hex
21	119-6253	1	Spacer-Limiter
22	69-8930	1	Washer
23	325-10	1	Screw-HH

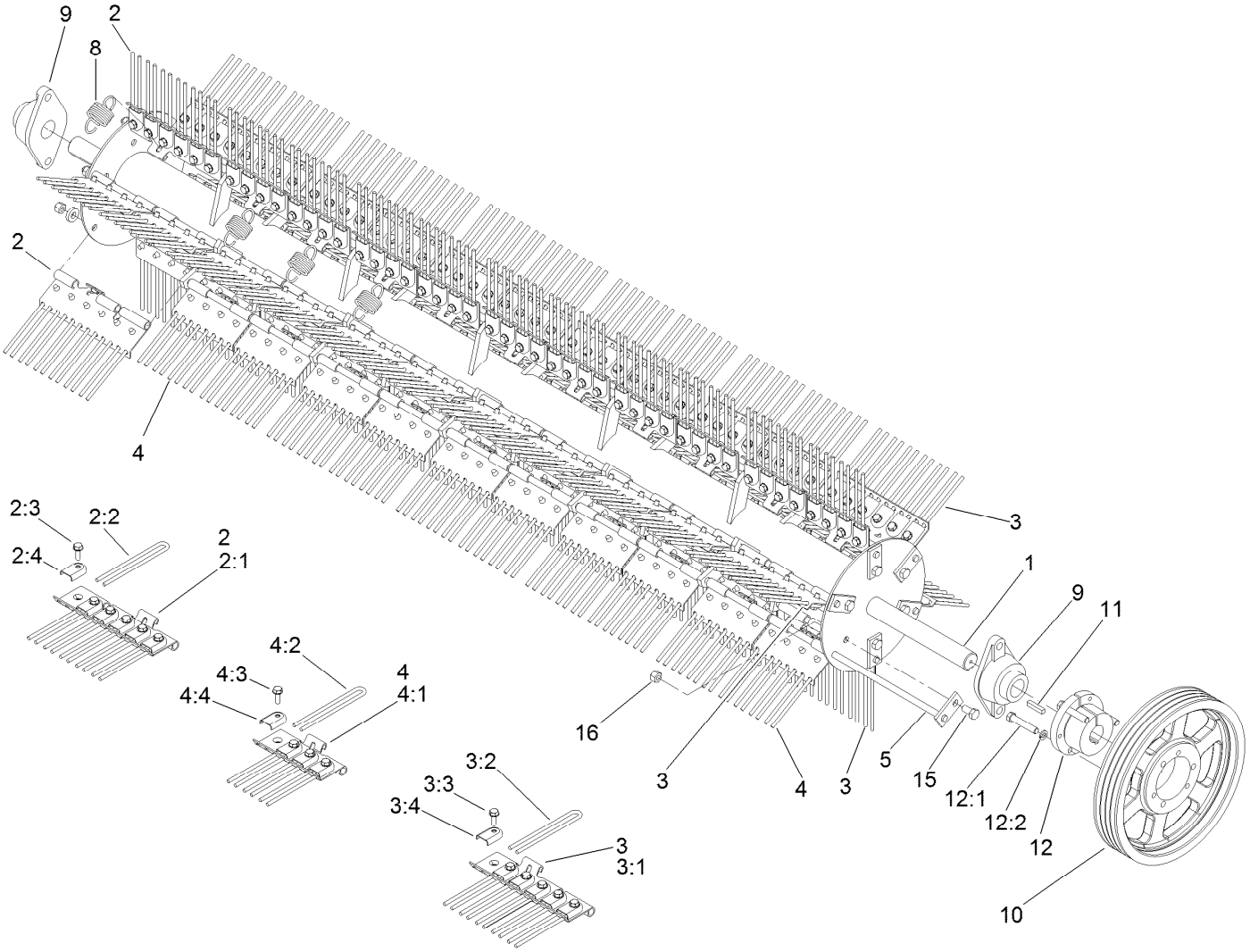

Rake Assembly

Ref.	Part Number	Qty.	Description
1	93-0197-01	1	Reel ASM
2		3	Left Plate ASM ●
2:1	115-9028	1	End Plate ASM
2:2	115-9022	6	Finger-Plastic
2:3	32140-94	6	Screw-HH, Sems
2:4	115-9023	6	Clamp-Finger
3		3	Right Plate ASM ●
3:1	115-9026	1	End Plate ASM
3:2	115-9022	6	Finger-Plastic
3:3	32140-94	6	Screw-HH, Sems
3:4	115-9023	6	Clamp-Finger
4		60	Center Plate ASM ●
4:1	115-9024	1	Plate-Center

Ref.	Part Number	Qty.	Description
4:2	115-9022	4	Finger-Plastic
4:3	32140-94	4	Screw-HH, Sems
4:4	115-9023	4	Clamp-Finger
5	13-4960	6	Shaft-Plate, Finger
8	13-3090	66	Spring-Finger
9	56-6230	2	Bearing-Roller
10	93-4001	1	Pulley-4 Groove
11	13-2840	1	Key-Square
12	13-2680	1	Bushing
12:1	120-6000	3	Bolt-TAP, HH
12:2	3253-4	3	Washer-Lock
15	323-4	6	Screw-HH
16	32152-2	12	Nut-Lock, Cone

● Not serviced separately

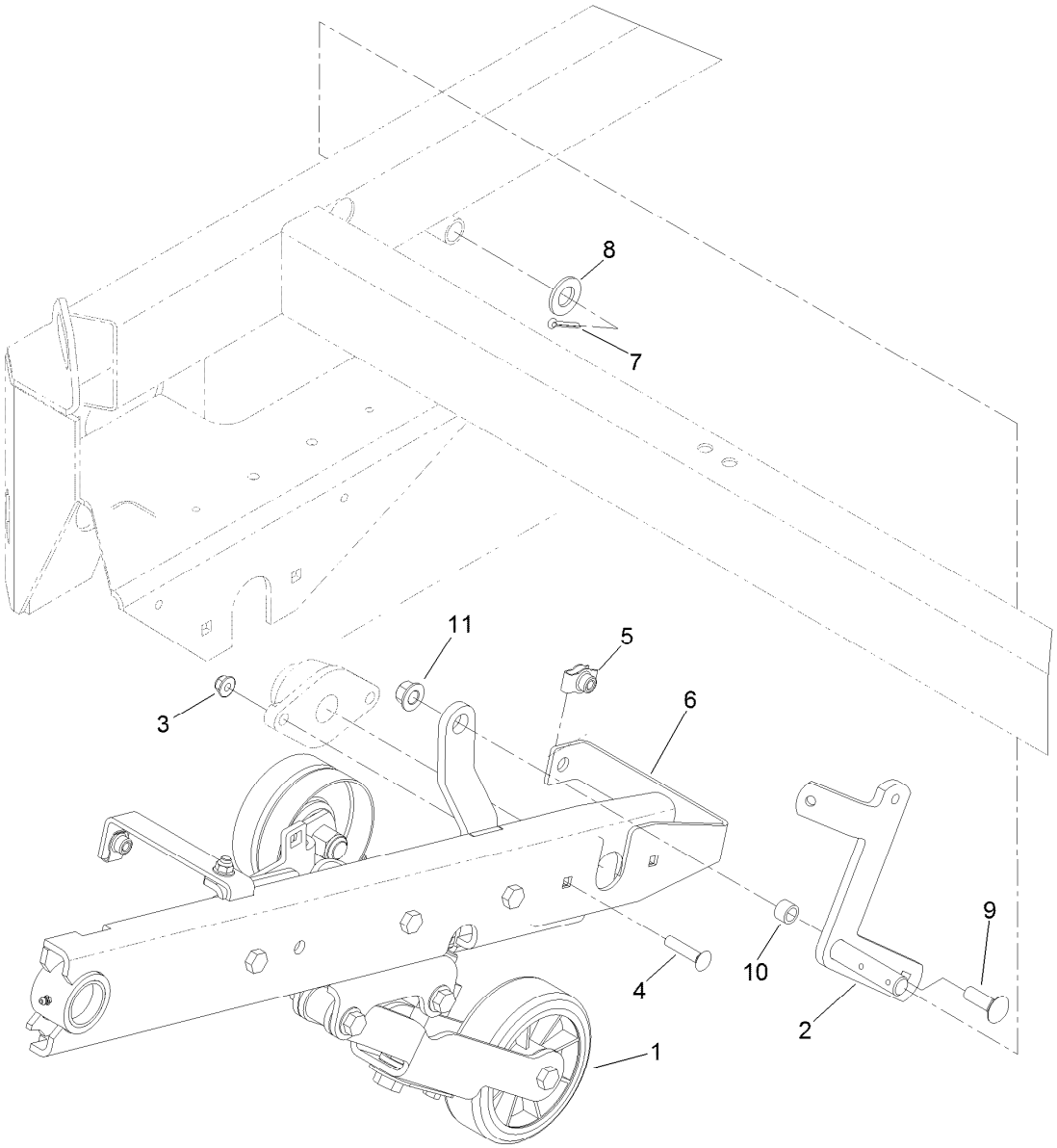

Right Hand Trailing Arm Assembly

Ref.	*Part Number*	*Qty.*	*Description*
1	117-8460	1	RH Trailing Arm ASM
2	117-8504-03	1	Crank-Bell, Lifting RH
3	104-8301	2	Nut-HF, NI
4	3231-29	2	Screw-CARR
5	105-4886	1	Nut-Tinnerman
6	121-2771-03	1	Brace-Cover, Belt
7	3272-22	1	Pin-Cotter
8	3256-28	1	Washer-Flat
9	3233-2	1	Screw-CARR
10	119-6188	1	Tube-Pivot
11	99-5107	1	Nut-Lock

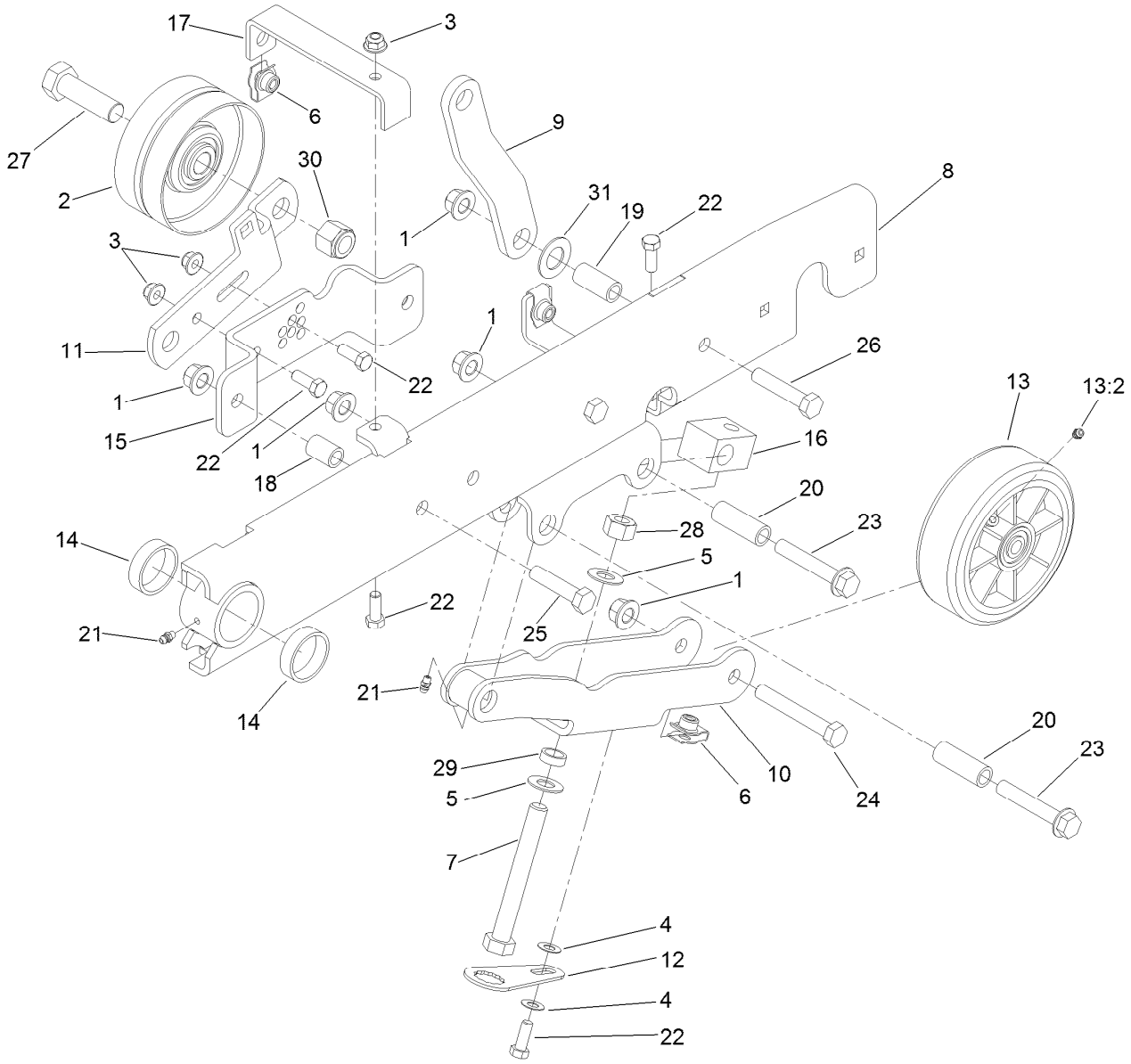

RH Trailing Arm Assembly No. 117-8460

Ref.	Part Number	Qty.	Description
1	99-5107	6	Nut-Lock
2	100-7631	1	Pulley-Idler
3	104-8301	4	Nut-HF, NI
4	108-1438	2	Washer-Hardened
5	99-7667	2	Washer-Flat
6	105-4886	3	Nut-Tinnerman
7	112-4874	1	Screw-HH, TAP
8	117-8461-03	1	Arm-Trailing
9	117-8465-03	1	Link-Lift
10	119-6301-03	1	Arm-Gauge, Wheel
11	117-8469-03	1	Bracket-Pulley
12	117-8484	1	Tab-Locking
13	117-8544	1	Wheel-Caster
13:2	302-5	1	Fitting-Grease
14	119-2985	2	Bushing
15	119-2992-03	1	Bracket-Adjust,Tension

Ref.	Part Number	Qty.	Description
16	119-6184	1	Block-Pivot
17	121-2772-03	2	Support-Cover, Belt
18	119-6189	2	Tube-Pivot
19	119-6191	1	Tube-Pivot
20	119-6192	2	Tube-Pivot
21	302-5	2	Fitting-Grease
22	323-6	5	Screw-HH
23	3234-40	2	Screw-HF
24	325-14	1	Screw-HH
25	325-9	2	Screw-HH
26	325-10	1	Screw-HH
27	328-2	1	Screw-HH
28	3217-11	1	Nut-Hex
29	119-6253	1	Spacer-Limiter
30	3296-51	1	Nut-Lock, NI
31	69-8930	1	Washer

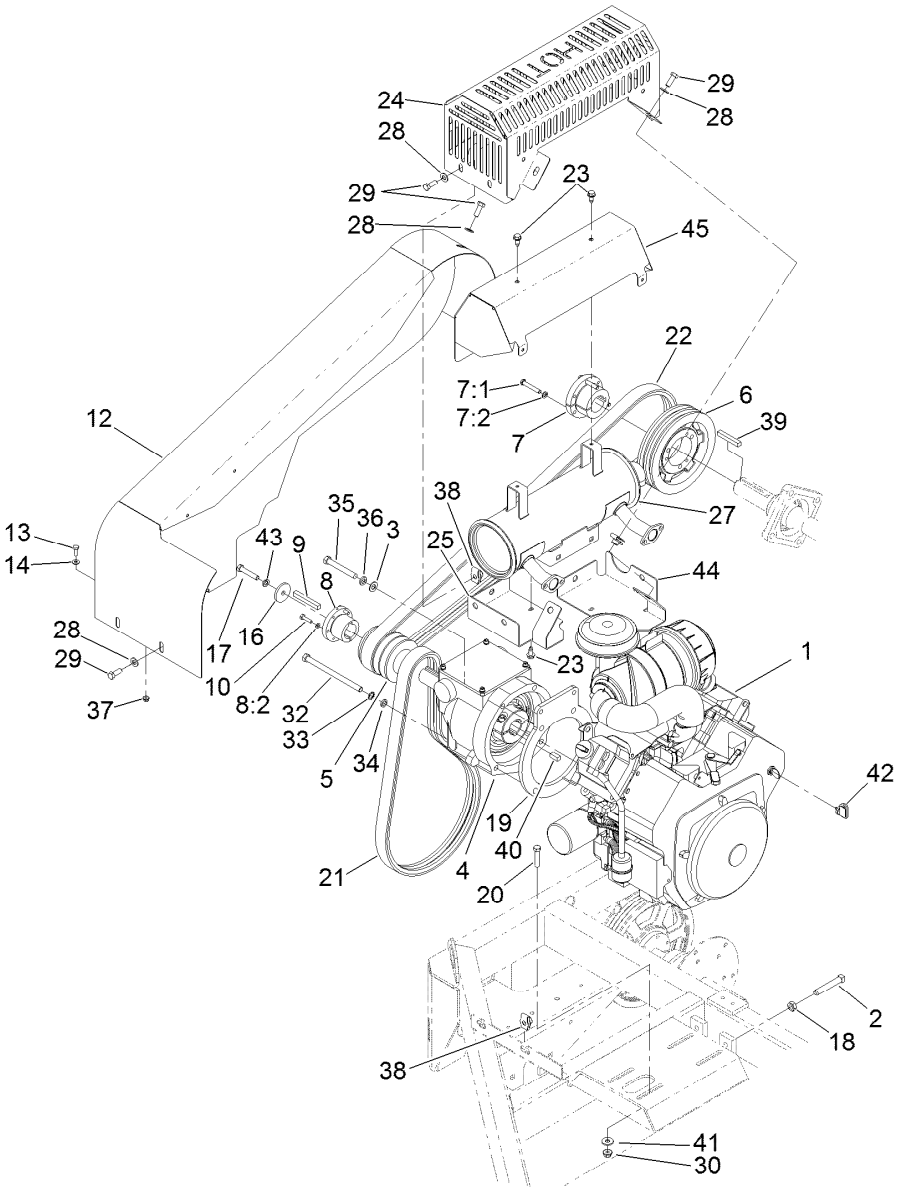

Engine, Clutch and Muffler Assembly

Ref.	Part Number	Qty.	Description
1	133-5930	1	Engine-Kohler, Ch682-3011
2	3244-21	2	Screw-SQH
3	3256-25	2	Washer-Flat
4	107-1050	1	Clutch-Centrifugal
5	13-3320	1	Sheave
6	13-2800	1	Sheave
7	13-2970	1	Bushing
7:1	120-6000	3	Bolt-TAP, HH
7:2	3253-4	3	Washer-Lock
8	13-3330	1	Bushing
8:2	3253-3	3	Washer-Lock
9	3-9155	1	Key-Square
10	321-6	3	Screw-HH
12	117-8510-03	1	Guard-Belt
13	321-4	2	Screw-HH
14	3256-22	2	Washer-Flat
16	4-1920	1	Washer
17	323-10	1	Screw-HH
18	3218-5	2	Nut-Jam
19	119-6137-03	1	Plate-Adapter
20	323-9	4	Screw-HH

Ref.	Part Number	Qty.	Description
21	13-2650	1	Belt-V
22	93-0183	1	Belt-V, Impeller
23	32104-32	6	Screw-HWH
24	121-2850-03	1	Shield-Muffler
25	121-2851-03	1	Shield-Heat, Front Bottom
27	120-5956	1	Muffler ASM
28	3256-24	10	Washer-Flat
29	323-6	10	Screw-HH
30	104-8301	4	Nut-HF, NI
32	324-31	2	Screw-HH
33	3255-16	2	Washer-Lock/EXT
34	37-4700	2	Spacer-Wheel
35	324-13	2	Screw-HH
36	3253-6	2	Washer-Lock
37	104-7201	2	Nut-HF
38	105-4886	9	Nut-Tinnerman
39	13-2240	1	Key-Square
40	105-7864	1	Key-Square
41	80-6990	4	Washer-Hardened
42	63-8360	1	Key-Ignition
43	3253-21	1	Washer-Lock

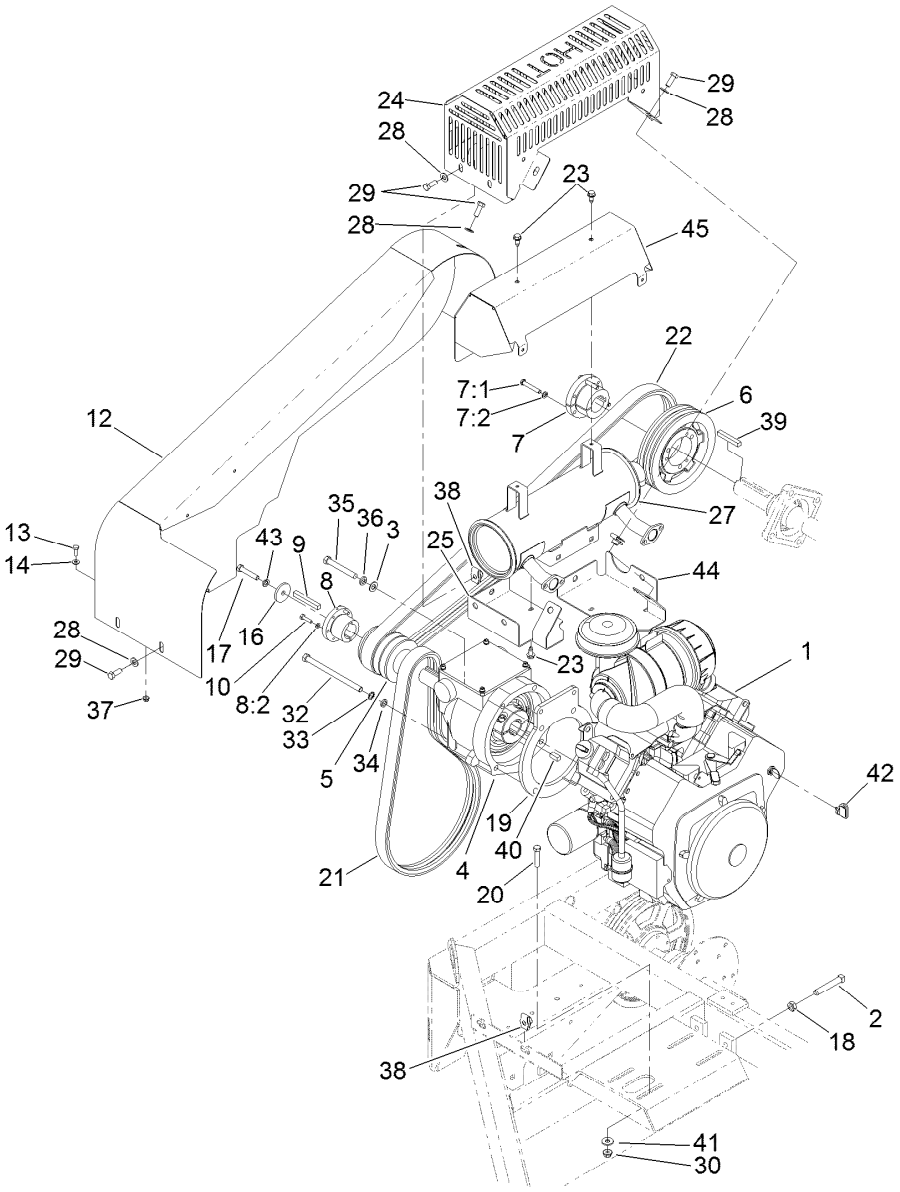

Engine, Clutch and Muffler Assembly (continued)

Ref.	*Part Number*	*Qty.*	*Description*
44	121-2848-03	1	Shield-Heat, Back Bottom
45	121-2865-03	1	Shield-Heat, Inner

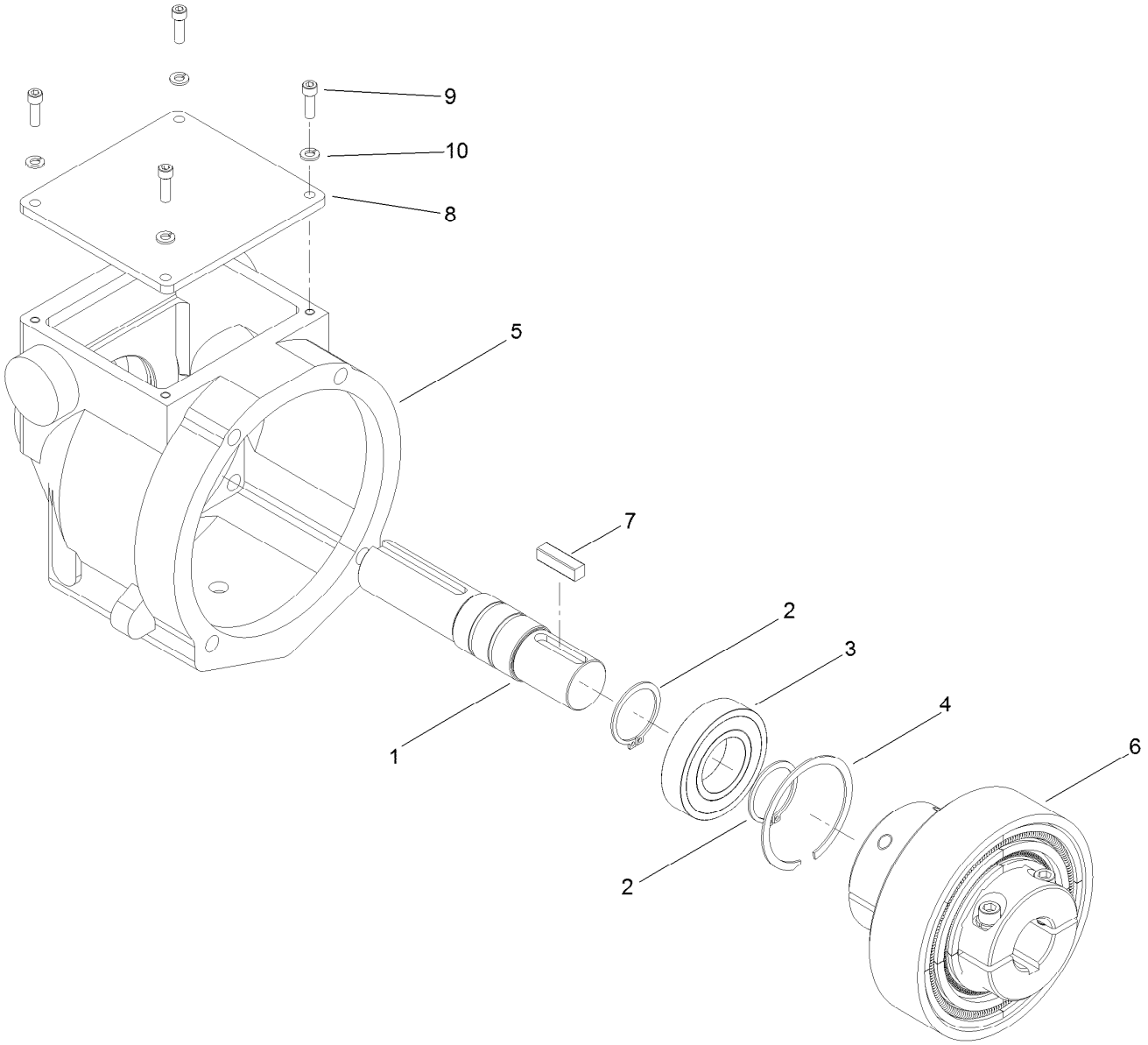

Centrifugal Clutch Assembly No. 107-1050

Ref.	*Part Number*	*Qty.*	*Description*
1	107-1052	1	Shaft
2	107-1053	2	Ring-Retaining
3	107-1054	1	Bearing
4	107-1055	1	Ring-Retaining
5		1	Housing ●
6	107-1070	1	Centrifugal Clutch ASM
7	107-1057	1	Key
8	107-1058	1	Cover
9	3274-8	4	Screw-HSH
10	3253-3	4	Washer-Lock

● Not serviced separately

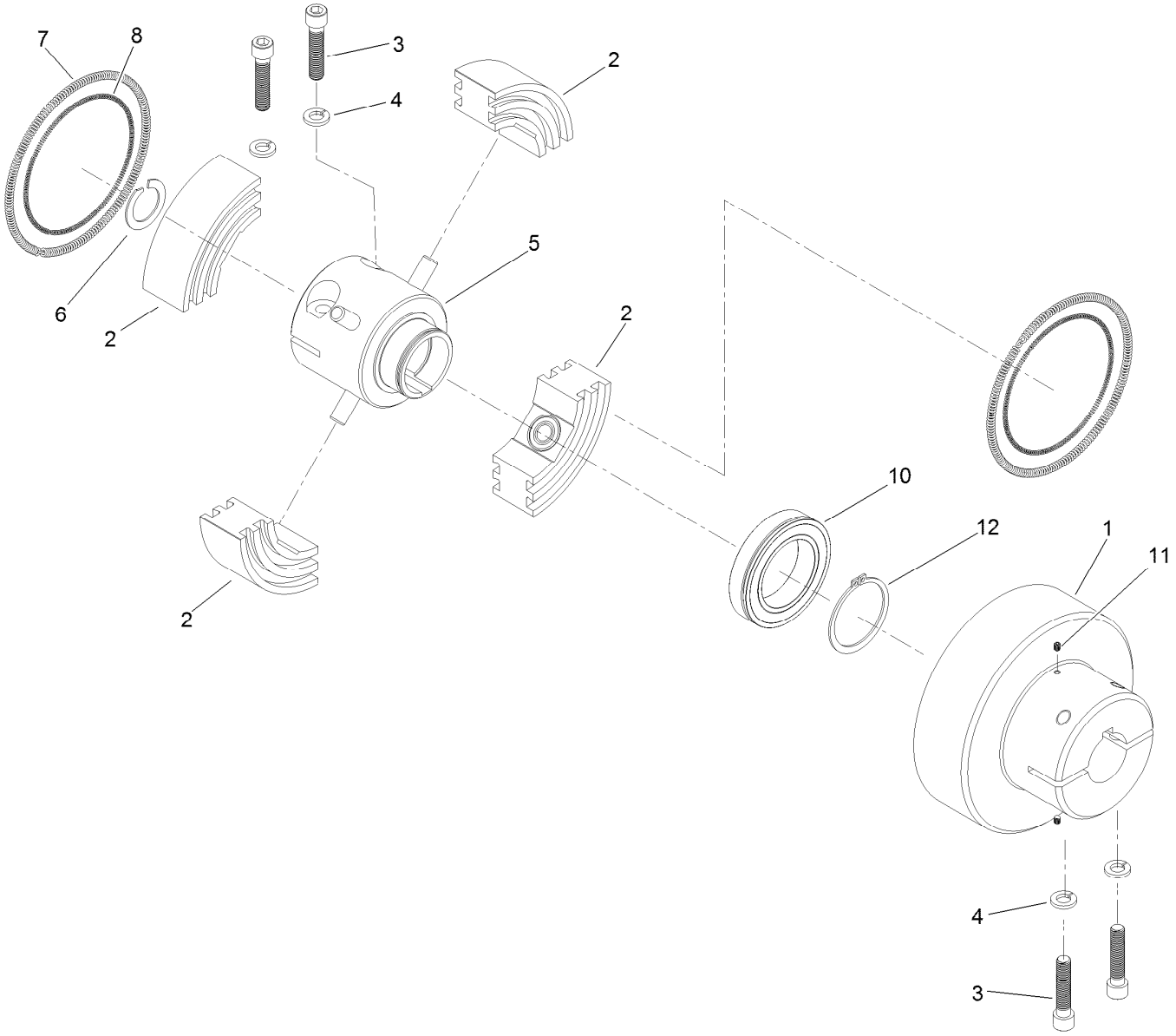

Clutch Assembly No. 107-1070

Ref.	*Part Number*	*Qty.*	*Description*
1		1	Housing-Clutch ●
2	107-1072	4	Shoe ASM
3	3274-3	4	Screw-HSH
4	3253-21	4	Washer-Lock
5	107-1081	1	Hub ASM
6	107-1074	1	Ring-Retaining
7	107-1075	2	Spring
8	107-1076	2	Spring
10	107-1078	1	Bearing
11	107-1079	2	Point-Cone
12	107-1080	1	Ring-Retaining

● Not serviced separately

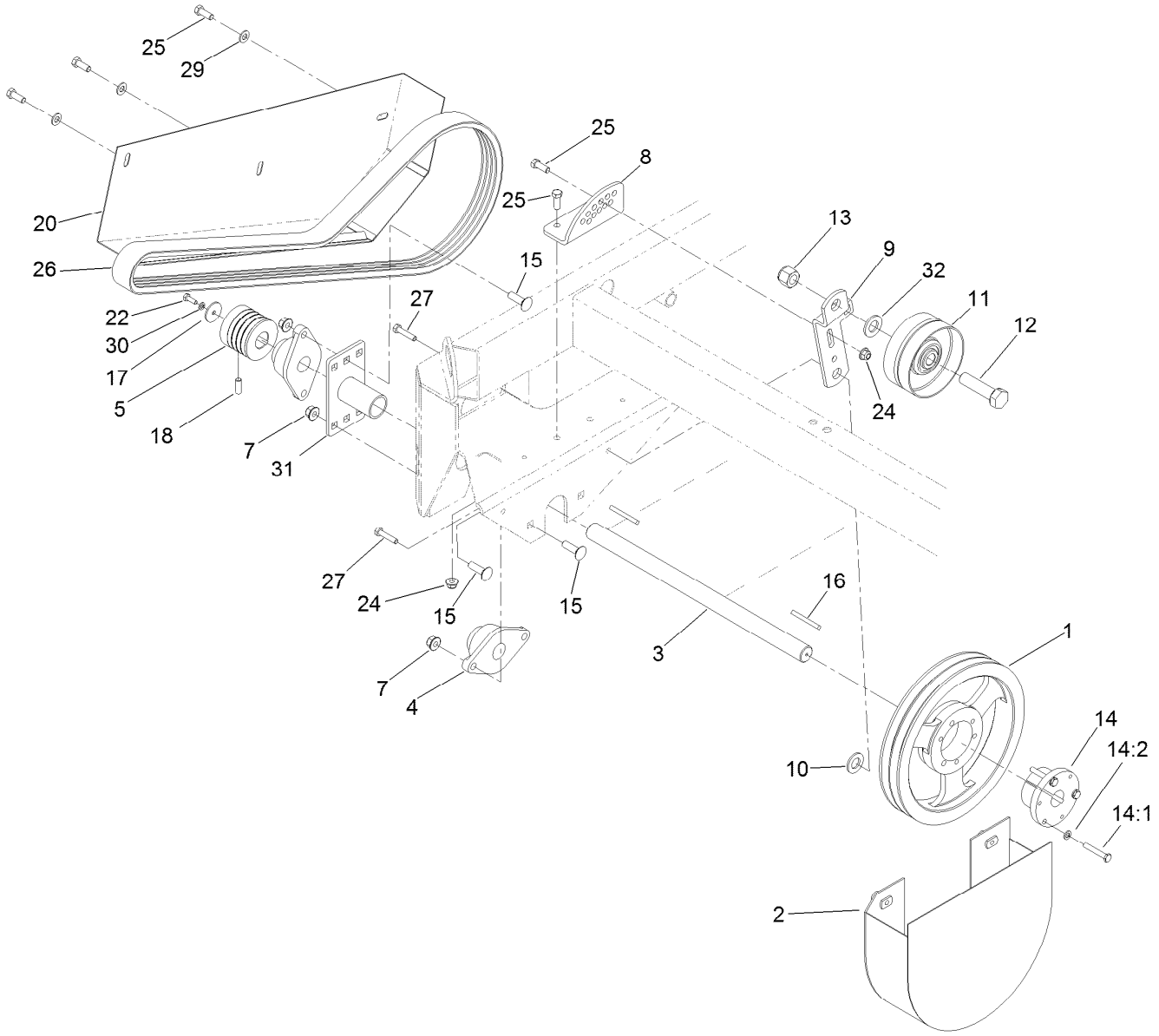

Guard Assembly

Ref.	Part Number	Qty.	Description
1	13-2670	1	Sheave
2	120-5914-03	1	Guard-Sheave
3	93-4032	1	Shaft-Jack
4	56-6230	2	Bearing-Roller
5	93-4033-01	1	Pulley-Driver
7	114-8417	6	Nut-HF, NI
8	117-8538-03	1	Bracket-Idler Arm
9	117-8469-03	1	Bracket-Pulley
10	3-8448	1	Washer-Thrust
11	100-7631	1	Pulley-Idler
12	328-25	1	Screw-HH
13	3296-51	1	Nut-Lock, NI
14	13-2680	1	Bushing
14:1	120-6000	3	Bolt-TAP, HH
14:2	3253-4	3	Washer-Lock

Ref.	Part Number	Qty.	Description
15	3232-3	6	Bolt-CARR
16	68-3220	2	Key-Stock
17	13-3710	1	Washer
18	3247-6	2	Screw-Set
20	121-2780-03	1	Guard-Lower, Belt
22	321-4	1	Screw-HH
24	104-8301	3	Nut-HF, NI
25	323-6	6	Screw-HH
26	93-4034	1	V-Belt
27	322-7	2	Screw-HH
29	3256-24	3	Washer-Flat
30	3253-3	1	Washer-Lock
31	117-8506-03	1	Mount-Guard
32	3256-28	3	Washer-Flat

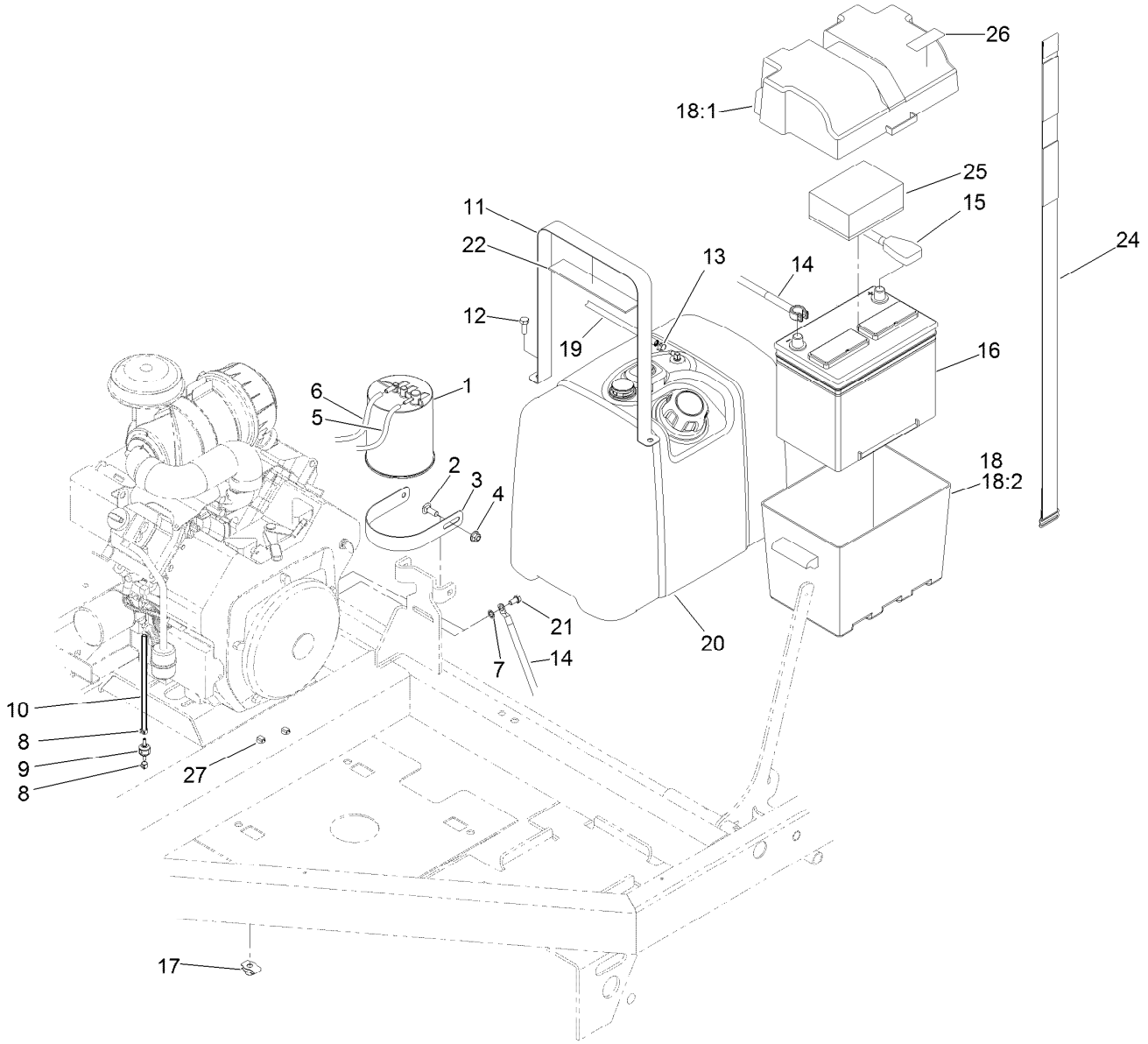

Battrey and Fuel System Assembly

Ref.	Part Number	Qty.	Description
1	132-5865	1	Canister-Carbon
2	3231-2	2	Bolt-CARR
3	117-8399	1	Strap-Mounting
4	104-8301	2	Nut-HF, NI
5	110-3254	1	Hose-Fuel
6	68-3630	1	Hose-Fuel
7	3254-2	1	Washer-Lock, Internal
8	2412-80	2	Clamp-Hose
9	133-8499	1	Valve-Check, Vacuum
10	115-7871	1	Hose-Fuel
11	119-2965	2	Strap-Tank
12	323-6	4	Screw-HH
13	2412-98	2	Clamp-Hose
14	120-5908	1	Cable-Battery, Negative

Ref.	Part Number	Qty.	Description
15	112-6808	1	Cable-Battery, Positive
16	106-5190	1	Battery
17	105-4886	4	Nut-Tinnerman
18	93-7595	1	Battery Box ASM
18:1	105-2914	1	Top-Battery Box
18:2	105-2915	1	Bottom-Battery Box
19	109-1395	1	Hose-Fuel
20	115-9047	1	Fuel Tank ASM
21	33114-016	1	Screw-HH
22	104-7102	2	Pad-Battery
24	94-1445	1	Strap-Battery
25	93-7968	1	Pad-Foam
26	119-6807	1	Decal-Warning
27	32180-030	4	Clip-Tie

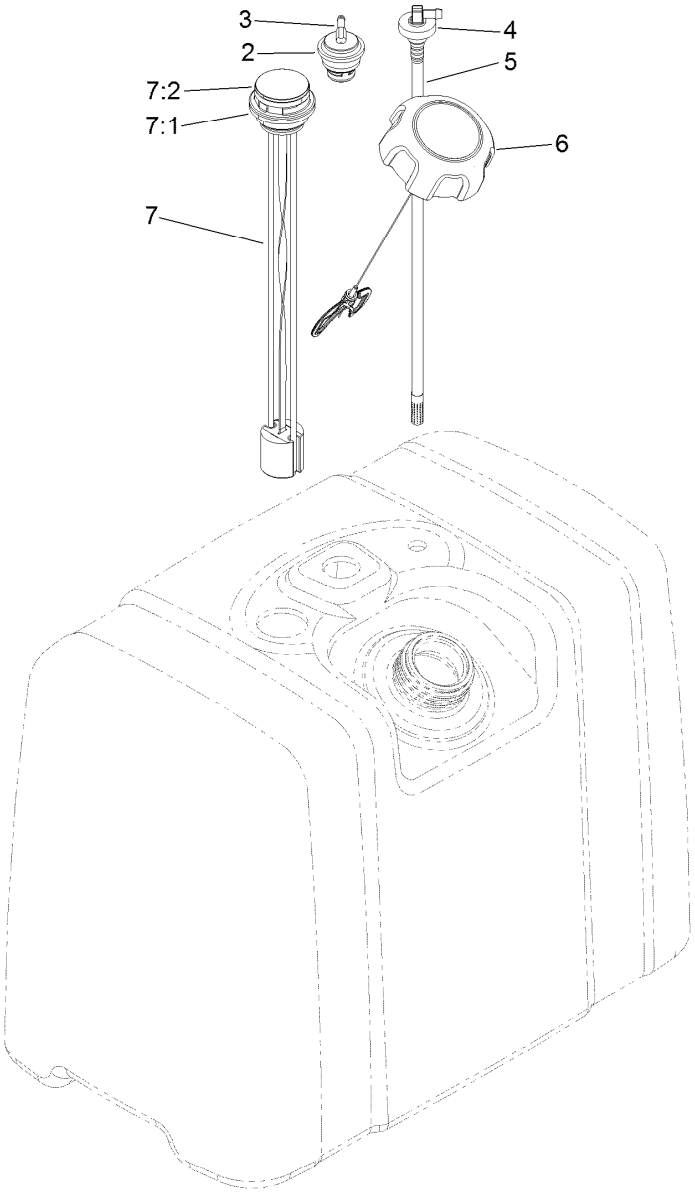

Fuel Tank Assembly No. 115-9047

Ref.	*Part Number*	*Qty.*	*Description*
2	114-0284	1	Grommet
3	114-0285	1	Valve-Rollover
4	46-6560	1	Bushing
5	115-9046	1	Stand Pipe
6	137-4127	1	Cap-Fuel
7	119-0507	1	Gauge-Fuel
7:1	119-0508	1	Seal
7:2	117-8404	1	Dial-Gauge

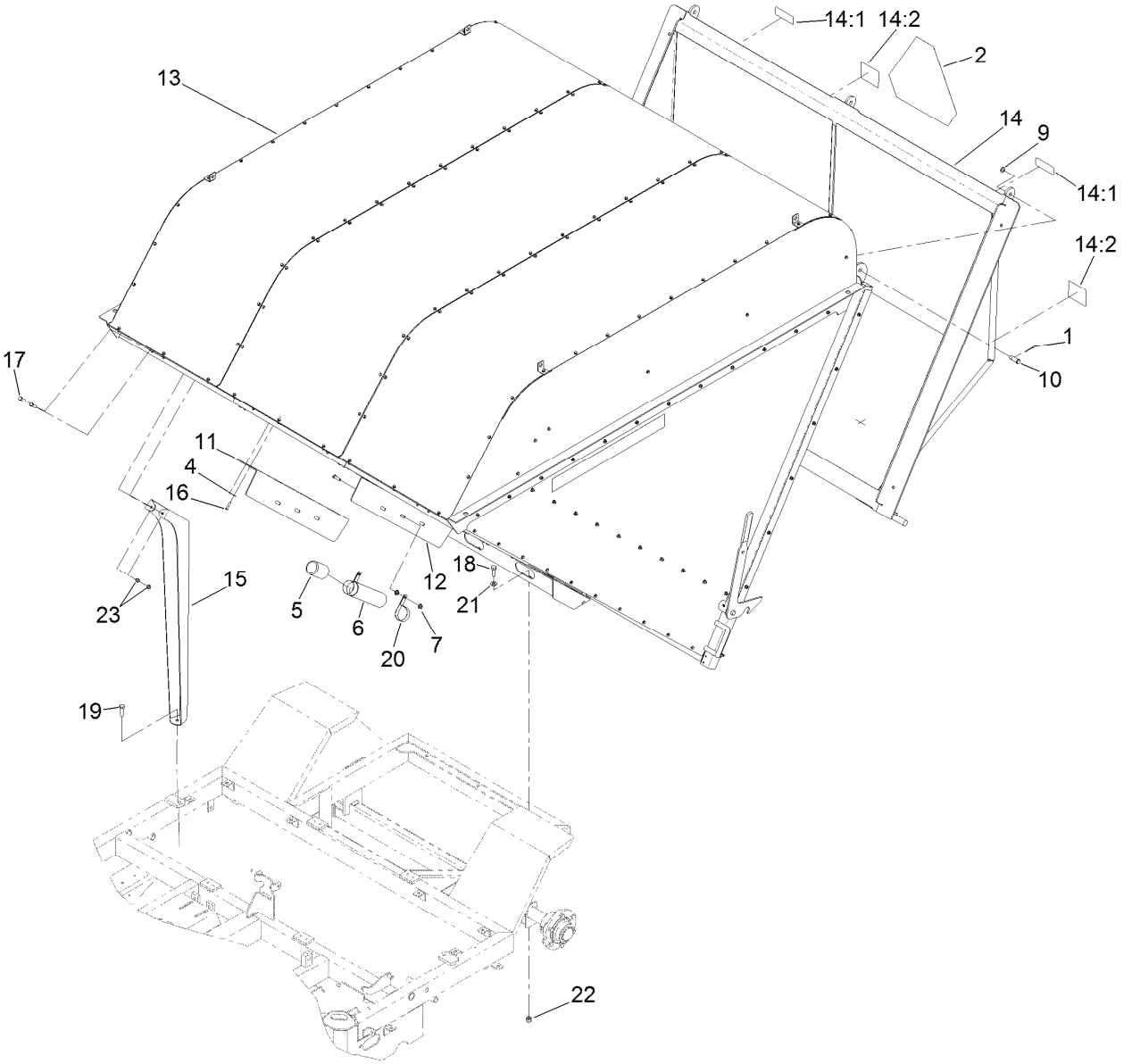

Hopper and Hood Assembly

Ref.	Part Number	Qty.	Description
1	1-806800	3	Pin-Cotter
2	120-0250	1	Decal-Warning
4	100-2400	16	Washer
5	104-7048	1	Cap-Housing
6	104-7050	1	Tube-Manual
7	104-8301	8	Nut-HF, NI
9	107-3041	3	Washer-Flat
10	119-6242	3	Pin-Hinge
11	120-6141-01	1	Bracket-Blower, RH
12	120-6142-01	1	Bracket-Blower, LH
13	120-6170	1	Hopper ASM
14	120-6175	1	Door-Hopper

Ref.	Part Number	Qty.	Description
14:1	121-2840	2	Decal-Caution
14:2	121-2841	2	Decal-Warning
15	121-2654-01	2	Support-Hopper
16	321-8	16	Screw-HH
17	323-7	10	Screw-HH
18	325-6	3	Screw-HH
19	325-7	2	Screw-HH
20	2412-133	2	Clamp-R
21	3256-26	3	Washer-Flat
22	3296-23	5	Nut-Lock, NI
23	104-8301	4	Nut-HF, NI

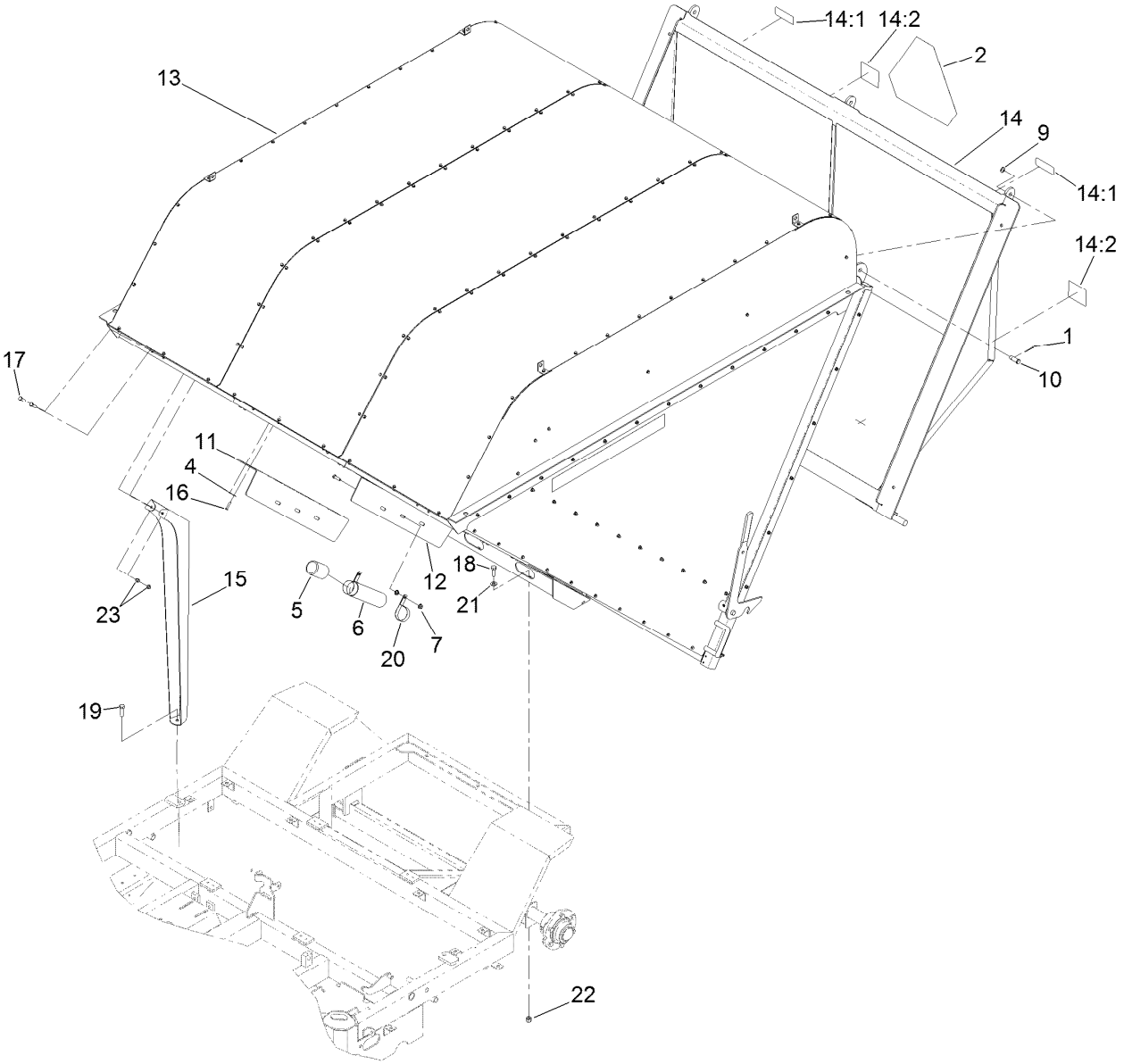

Hopper and Hood Assembly (continued)

Hopper Assembly No. 120-6170

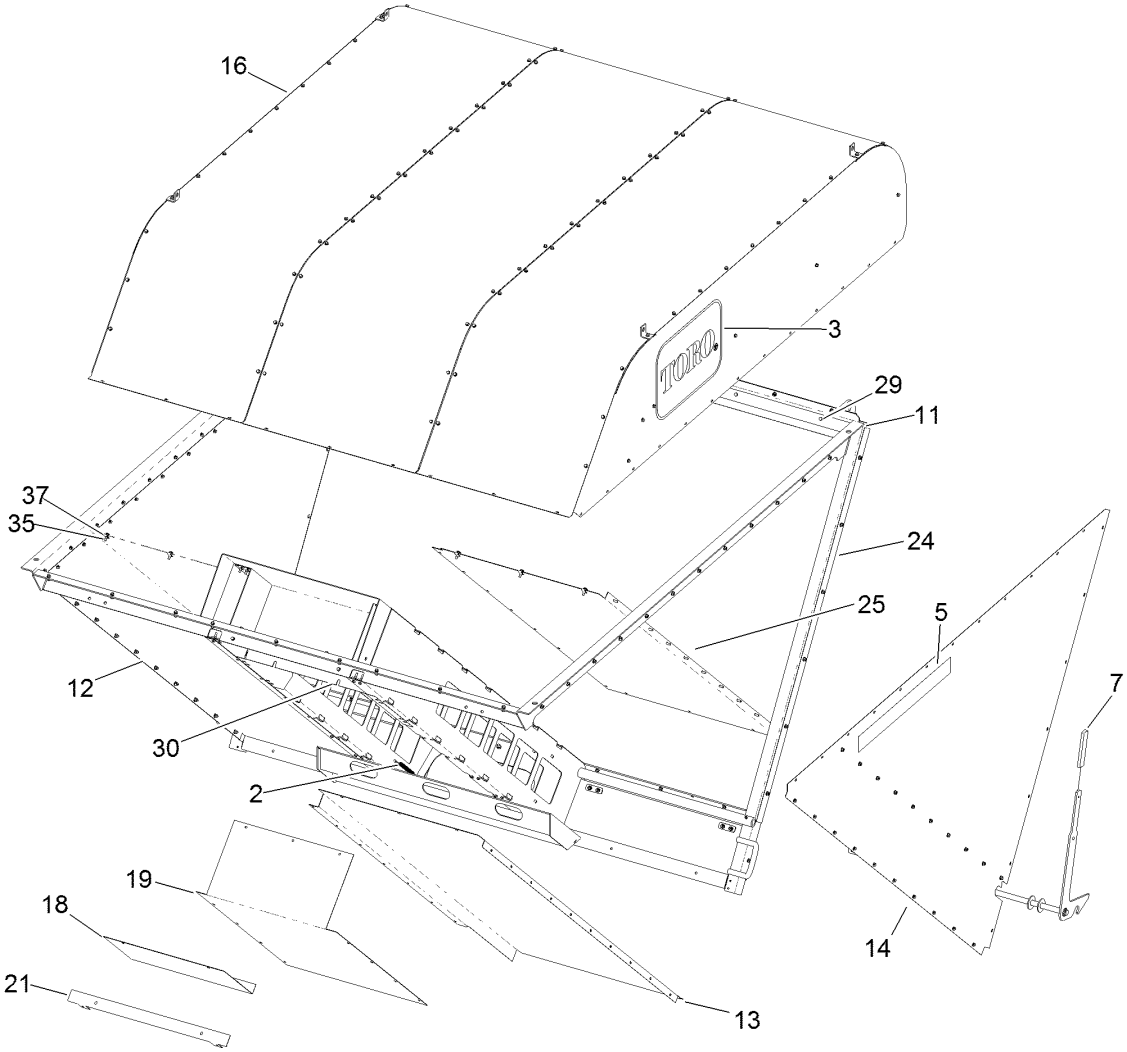

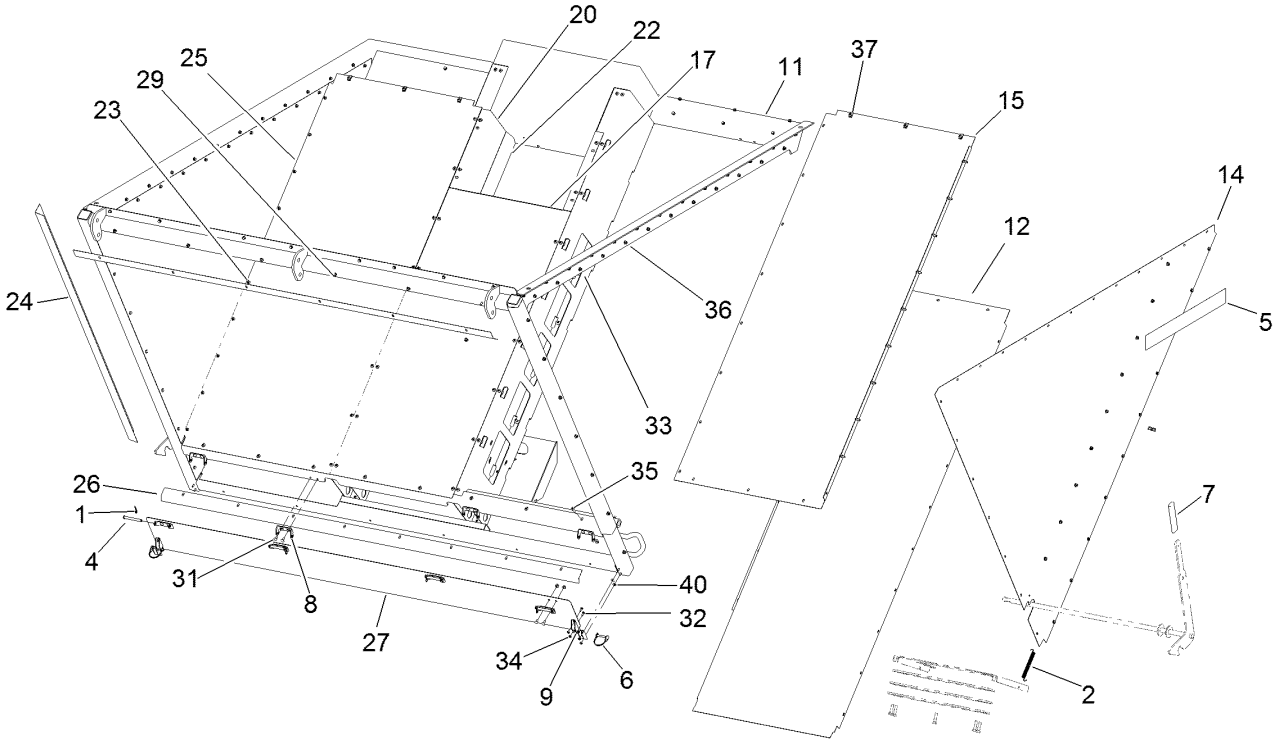

Hopper Assembly No. 120-6170 (continued)

Ref.	Part Number	Qty.	Description
1	9335044	4	Pin-Hair
2	12-8810	2	Spring-Extension
3	67-7920	2	Decal
4	80-2570	4	Pin-Clevis
5	93-0184	2	Decal-Hopper
6	100-1663	2	Pin-Hitch
7	105-3450	2	Grip-Lever, Lift
8	107-1549	4	Hinge-Half
9	119-6227	2	Bracket-Attachment, Chute Extension
11	120-6150	1	Hopper Frame ASM
12	120-6156-01	1	Panel-Bottom, RH
13	120-6157-01	1	Panel-Bottom, LH
14	120-6158-01	2	Panel-Side
15	120-6159	1	Panel-Floor, RH Side
16	131-9360	1	Hopper Roof ASM
17	120-6161	1	Panel-Center, Inside
18	120-6162-01	1	Panel-Housing, Upper
19	120-6163-01	1	Panel-Center, Lower
20	120-6164-01	2	Panel-Closeoff
21	120-6166-01	1	Panel-Upper Closeoff
22	120-6167-01	2	Seal-Chute, Side
23	120-6168-01	1	Seal-Door, Top
24	121-2877	2	Seal-Door, Side
25	120-6173	1	Panel-Floor, LH Side
26	121-2767-01	1	Seal-Door, Bottom
27	125-5955	1	Screen Floor ASM
29	321-15	20	Screw-HH
30	321-8	12	Screw-HH
31	3229-11	8	Screw-CARR
32	3229-34	4	Screw-CARR
33	3234-33	121	Screw-HHF
34	3296-2	4	Nut-Lock, NI
35	32105-32	53	Screw-TTH
36	32128-32	143	Nut-HHF
37	107069	9	Clip
40	9202704	4	Washer-Flat

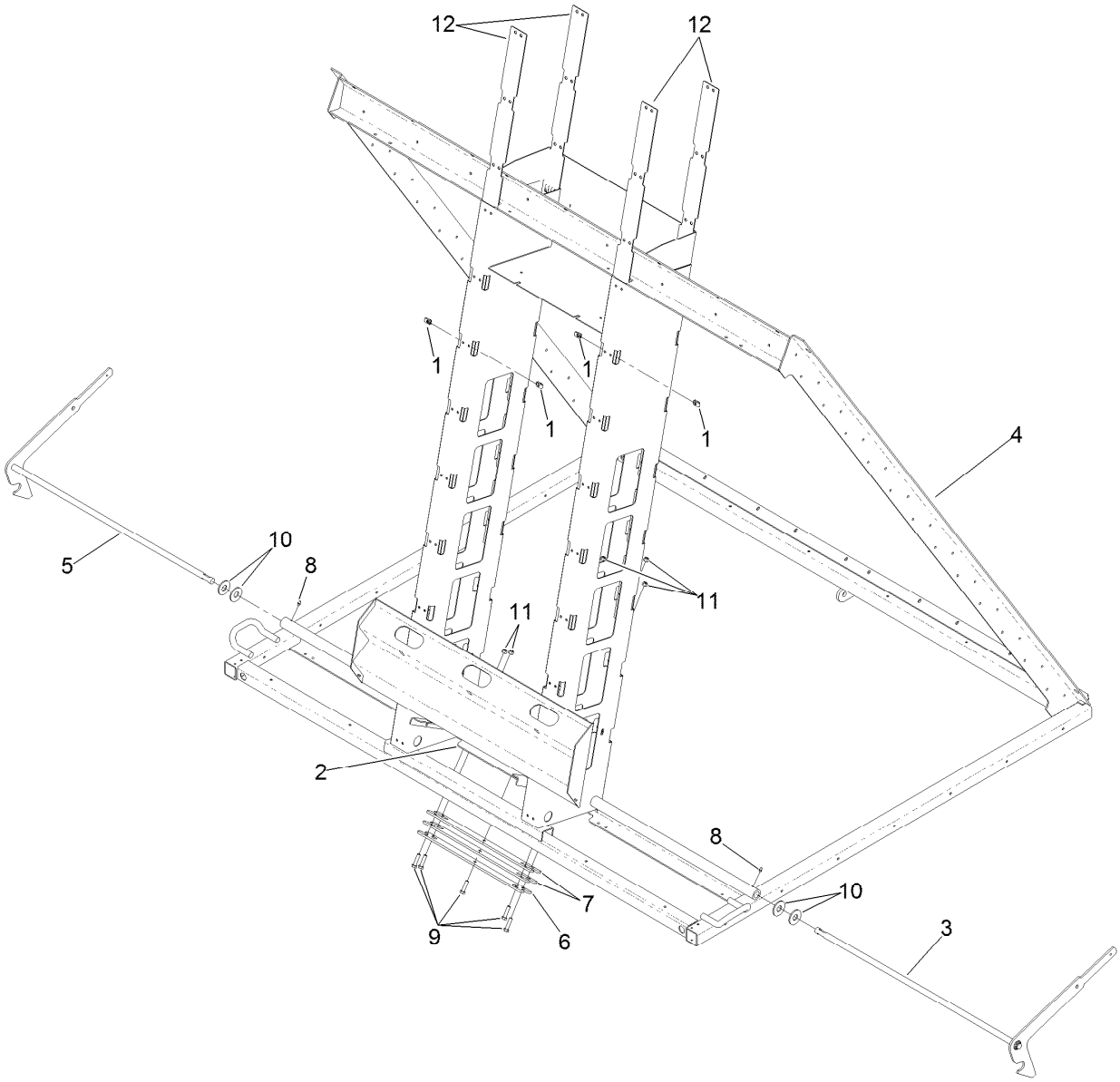

Hopper Frame Assembly No. 120-6150

Ref.	*Part Number*	*Qty.*	*Description*
1	107069	64	Clip
2	119-6440-01	1	Arm-Spring, Latch
3	120-5995-01	1	Lever And Catch Wa
4	120-6145-01	1	Frame-Hopper, Wa
5	121-2747-01	1	Lever And Catch, RH Wa
6	121-2748-01	1	Retainer-Spring Arm
7	121-2749-01	2	Spacer-Retainer
8	302-5	4	Fitting-Grease
9	323-50	5	Bolt-HH
10	3256-8	4	Washer-Flat
11	3296-39	5	Nut-Lock, NI
12	121-2741	4	Support, Fastener

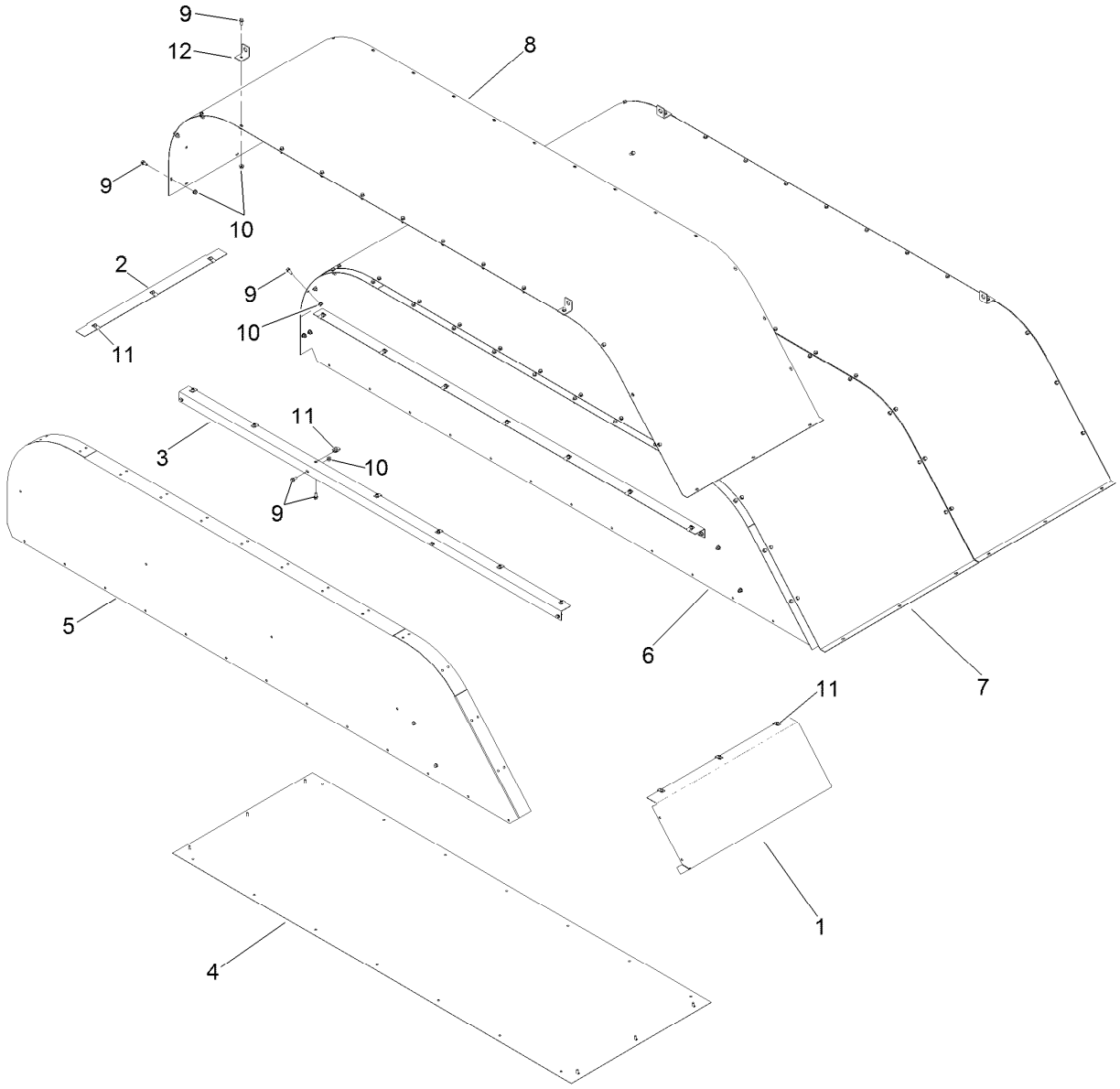

Hopper Roof Assembly No. 131-9360

Ref.	*Part Number*	*Qty.*	*Description*
1	120-6151-01	2	Panel-Duct, Inside Front
2	120-6152-01	2	Rail-Back, Screen
3	120-6153-01	4	Rail-Side, Screen
4	120-6154-01	2	Screen
5	121-2725-01	2	Top-Hopper, RH
6	121-2730-01	2	Top-Hopper, LH
7	121-2736-01	1	Panel-Center, Top
8	121-2737-01	2	Panel-Side, Top
9	3234-33	158	Screw-HHF
10	32128-32	118	Nut-HHF
11	107069	40	Clip
12	121-2796	4	Tab-Lift, Corner

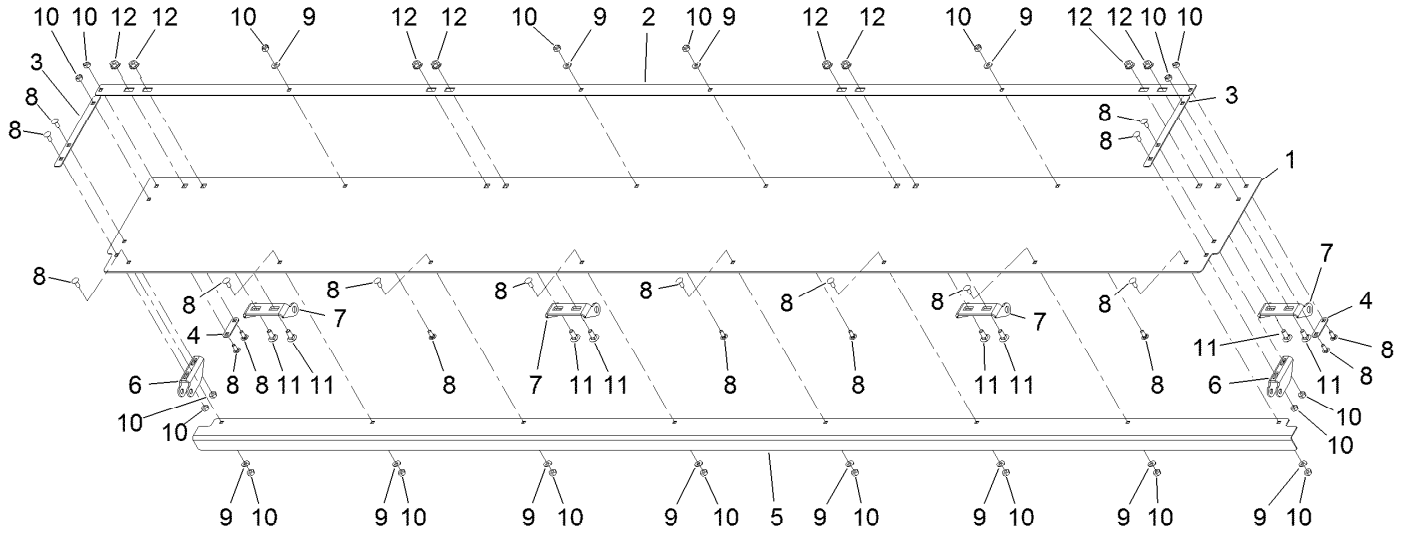

Screen Floor Assembly No. 125-5955

Ref.	*Part Number*	*Qty.*	*Description*
1	125-5949-01	1	Screen, Floor
2	125-5951-01	1	Plate-Backing, Hinge
3	125-5953-01	2	Plate-Backing, Screen
4	119-6230	2	Mount-Nozzle
5	125-5952-01	1	Plate-Stiffener,Screen
6	119-6227	2	Bracket-Attachment, Chute Extension
7	107-1549	4	Hinge-Half
8	1-807513	20	Bolt-CARR
9	3256-14	12	Washer-Flat
10	3296-2	20	Nut-Lock, NI
11	3229-11	8	Screw-CARR
12	32128-32	8	Nut-HHF

Attachments and Accessories

For 07055 Dust-Control 66in Rake-O-Vac Sweeper

Product Name	Model/Part
Street Broom	07162
Guard Kit	137-6600
Spark Arrestor Screen	94-8157

Notes:

Notes:

TORO®

Count on it.