Form No. 3323-504 Rev A

Wheel Horse®
518xi Tractor

Model No. 73471—200000001 & Up

Operator's Manual

Domestic English (EN)

Introduction

Thank you for purchasing a Toro product.

All of us at Toro want you to be completely satisfied with your new product, so feel free to contact your local Authorized Service Dealer for help with service, genuine replacement parts, or other information you may require.

Whenever you contact your Authorized Service Dealer or the factory, always know the model and serial numbers of your product. These numbers will help the Service Dealer or Service Representative provide exact information about your specific product. You will find the model and serial number plate located in a unique place on the product as shown below.

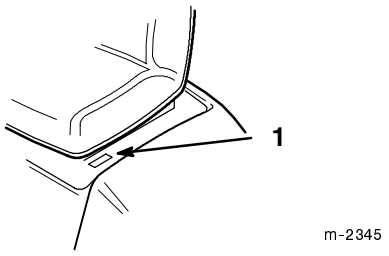

1. Model and Serial Number Plate

For your convenience, write the product model and serial numbers in the space below.

Model No: _____

Serial No. _____

Read this manual carefully to learn how to operate and maintain your product correctly. Reading this manual will help you and others avoid personal injury and damage to the product. Although we design, produce and market safe, state-of-the-art products, you are responsible for using the product properly and safely. You are also responsible for training persons, who you allow to use the product, about safe operation.

The warning system in this manual identifies potential hazards and has special safety messages that help you and others avoid personal injury, even death. DANGER, WARNING and CAUTION are signal words used to identify the level of hazard. However, regardless of the hazard, be extremely careful.

DANGER signals an extreme hazard that will cause serious injury or death if the recommended precautions are not followed.

WARNING signals a hazard that may cause serious injury or death if the recommended precautions are not followed.

CAUTION signals a hazard that may cause minor or moderate injury if the recommended precautions are not followed.

Two other words are also used to highlight information. “Important” calls attention to special mechanical information and “Note” emphasizes general information worthy of special attention.

The left and right side of the machine is determined by sitting on the seat in the normal operator’s position.

WARNING:

The engine exhaust from this product contains chemicals known to the State of California to cause cancer, birth defects, or other reproductive harm.

IMPORTANT: The engine in this product is not equipped with a spark arrester muffler. It is a violation of California Public Resource Code Section 4442 to use or operate this engine on any forest-covered, brush-covered or grass-covered land as defined in CPRC 4126. Other states or federal areas may have similar laws.

©The Toro Company—2000
All Rights Reserved

Contents

	Page
Safety	2
Safe Operating Practices	2
Toro Riding Mower Safety	4
Slope Chart	5
Safety and Instruction Decals	7
Check Before Operating	8
Opening the Hood	8
Closing the Hood	9
Removing the Side Panels	9
Adding Fuel	10
Check the Engine Oil Level	11
Check for Debris	12
Check the Safety Interlock System	13
Check the Brake	13
Operation	14
Think Safety First	14
Controls	14
Parking Brake	14
Starting and Stopping the Engine	14
Operating the Power Take Off (PTO)	15
The Safety Interlock System	16
Gauges and Indicator Lights	18
Driving Forward or Backward	19
Stopping the Machine	20
Attachment Power Lift	20
Positioning the Seat	21
Headlights	21
Positioning the Tilt Steering Wheel	22
The Smart Turnt Steering Feature	22
Pushing the Machine by Hand	23
Maintenance	24
Service Interval Chart	24
Air Cleaner	25
Engine Oil	27
Spark Plugs	29
Greasing and Lubrication	30
Tire Pressure	31
Brake	32
Fuel Tank	33
Fuel Filter	34
Front Wheel Toe-In	35
Transaxle Fluid	36
Fuses	38
Headlights	38
Battery	39
Cleaning and Storage	41
Wiring Diagram	43
Troubleshooting	44
The Toro Total Coverage Guarantee	50

The enclosed Engine Owner's Manual is supplied for information regarding The U.S. Environmental Protection Agency (EPA) and the California Emission Control Regulation of emission systems, maintenance and warranty.

Keep this engine Owner's Manual with your unit. Should this engine Owner's Manual become damaged or illegible, replace immediately. Replacements may be ordered through the engine manufacturer.

Safety

This machine meets or exceeds the B71.1-1998 specifications of the American National Standards Institute, in effect at the time of production. However, improper use or maintenance by the operator or owner can result in injury. To reduce the potential for injury, comply with these safety instructions and always pay attention to the safety alert ⚠ symbol, which means CAUTION, WARNING, or DANGER—"personal safety instruction." Failure to comply with the instruction may result in personal injury or death.

Safe Operating Practices

The following instructions are from ANSI standard B71.1—1998.

This product is capable of amputating hands and feet and throwing objects. Always follow all safety instructions to avoid serious injury or death.

General Operation

- Read, understand, and follow all instructions in the operator's manual and on the machine before starting.
- Allow only responsible adults who are familiar with the instructions to operate the machine.
- Clear the area of objects such as rocks, toys, wire, etc., which could be picked up and thrown by the blade.
- Be sure the area is clear of other people before mowing. Stop the machine if anyone enters the area.
- Never carry passengers.
- Do not mow in reverse unless absolutely necessary. Always look down and behind before and while backing.
- Be aware of the mower discharge direction and do not point it at anyone. Do not operate the mower without either the entire grass catcher or the guard in place.
- Slow down before turning.
- Never leave a running machine unattended. Always turn off blades, set parking brake, stop engine, and remove keys before dismounting.
- Turn off blades when not mowing.
- Stop the engine before removing the grass catcher or unclogging the chute.
- Mow only in daylight or good artificial light.
- Do not operate the machine while under the influence of alcohol or drugs.
- Watch for traffic when operating near or crossing roadways.
- Use extra care when loading or unloading the machine into a trailer or truck.
- Always wear safety goggles or safety glasses with side shields when operating mower.
- Data indicates that operators, age 60 years and above, are involved in a large percentage of riding mower-related injuries. These operators should evaluate their ability to operate the riding mower safely enough to protect themselves and others from serious injury.

Slope Operation

Slopes are a major factor related to loss-of-control and tip-over accidents, which can result in severe injury or death. All slopes require extra caution. If you cannot back up the slope or if you feel uneasy on it, do not mow it.

- Mow up and down slopes, not across.
- Remove obstacles such as rocks, tree limbs, etc.
- Watch for holes, ruts or bumps. Uneven terrain could overturn the machine. Tall grass can hide obstacles.
- Use slow speed. Choose a low gear so that you will not have to stop or shift while on the slope.
- Follow Toro's recommendations for wheel weight or counterweights to improve stability.
- Use extra care with grass catchers or other attachments. These can change the stability of the machine.
- Keep all movement on slopes slow and gradual. Do not make sudden changes in speed or direction.
- Avoid starting or stopping on a slope. If tires lose traction, disengage the blades and proceed slowly straight down the slope.
- Do not turn on slopes unless necessary, and then, turn slowly and gradually downhill, if possible.
- Do not mow near drop-offs, ditches, or embankments. The machine could suddenly turn over if a wheel goes over the edge of a cliff or ditch, or if an edge caves in.
- Do not mow on wet grass. Reduced traction could cause sliding.
- Do not try to stabilize the machine by putting your foot on the ground.
- Do not use a grass catcher on steep slopes.

Children

Tragic accidents can occur if the operator is not alert to the presence of children. Children are often attracted to the machine and the mowing activity. Never assume that children will remain where you last saw them.

- Keep children out of the mowing area and under the watchful care of another responsible adult.
- Be alert and turn the machine off if children enter the area.
- Before and while backing, look behind and down for small children.
- Never carry children, even with the blades off. They may fall off and be seriously injured or interfere with safe machine operation.
- Never allow children to operate the machine.
- Use extra care when approaching blind corners, shrubs, trees, the end of a fence or other objects that may obscure vision.

Service

- Use extra care when handling gasoline and other fuels. They are flammable and vapors are explosive.

  A. Use only an approved container.

  B. Never remove the gas cap or add fuel when the engine is running. Allow the engine to cool before refueling. Do not smoke.

  C. Never refuel the machine indoors.

  D. Never store the machine or fuel container inside where there is an open flame, such as near a water heater or furnace.
- Never run a machine inside a closed area.
- Keep nuts and bolts tight, especially the blade attachment bolts. Keep equipment in good condition.
- Never tamper with safety devices. Check their proper operation regularly.
- Keep the machine free of grass, leaves, or other debris build-up. Clean up oil or fuel spillage. Allow the machine to cool before storing.
- Stop and inspect the equipment if you strike an object. Repair, if necessary, before restarting.

- Grass catcher components are subject to wear, damage and deterioration, which could expose moving parts or allow objects to be thrown. Frequently check components and replace with manufacturer's recommended parts, when necessary.
- Mower blades are sharp and can cut. Wrap the blade(s) or wear gloves, and use extra caution when servicing them.
- Use only genuine Toro replacement parts to ensure that original standards are maintained.

Toro Riding Mower Safety

The following list contains safety information specific to Toro products or other safety information that you must know that is not included in the ANSI standard.

⚠ WARNING

POTENTIAL HAZARD
- **Engine exhaust contains carbon monoxide, which is an odorless, deadly poison.**

WHAT CAN HAPPEN
- **Carbon monoxide can kill you and is also known to the State of California to cause birth defects.**

HOW TO AVOID THE HAZARD
- **Do not run engine indoors or in an enclosed area.**

- Stop the engine, disconnect spark plug wire(s) and remove key before performing any service, repairs, maintenance or adjustments.
- Slow down before turning. Sharp turns on any terrain may cause loss of control.
- Never leave a running machine unattended. Always turn off blades, set parking brake, stop engine, and remove the ignition and "Key Choice" keys before dismounting.
- Keep hands, feet, hair and loose clothing away from attachment discharge area, underside of mower and any moving parts while engine is running.
- Do not touch equipment or attachment parts which may be hot from operation. Allow to cool before attempting to maintain, adjust or service.
- Remove obstacles such as rocks, tree limbs, etc. from the mowing area. Watch for holes, ruts or bumps, as uneven terrain could overturn the machine. Tall grass can hide obstacles.
- Battery acid is poisonous and can cause burns. Avoid contact with skin, eyes and clothing. Protect your face, eyes and clothing when working with a battery.
- Battery gases can explode. Keep cigarettes, sparks and flames away from battery.
- Use only genuine replacement parts to ensure that original standards are maintained.
- Mow up and down slopes greater than 5°, not across.
- Mow downhill only on slopes above 10°, never mow uphill. If a steep slope must be ascended, back up the hill, and drive forward down the hill, keeping the machine in gear.
- Do not operate machine on hillsides or slopes exceeding 15°.
- Avoid turning on slopes. If you must turn, turn slowly and gradually downhill, if possible.
- Do not use a grass catcher on steep slopes. Heavy grass bags could cause loss of control or overturn the machine.
- Use only Toro-approved attachments. Warranty may be voided if used with unapproved attachments.

Slope Chart

Read all safety instructions on pages 2-4.

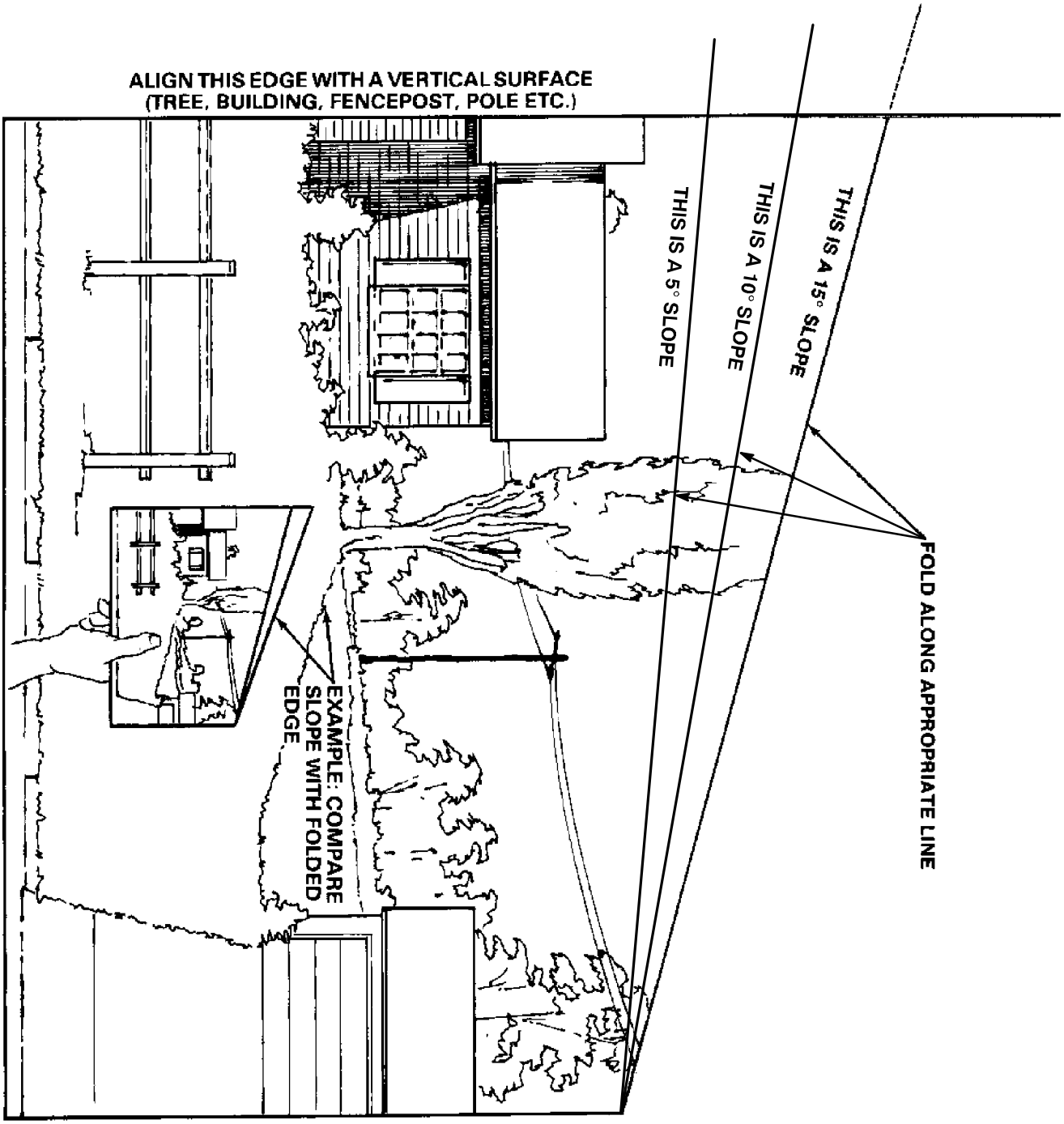

Safety and Instruction Decals

Safety decals and instructions are easily visible to the operator and are located near any area of potential danger. Replace any decal that is damaged or lost.

On the drive shaft cover (Part No. 99-6090)

On the front of the seat bracket (Part No. 99-5339)

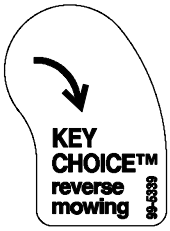

On the battery strap (Part No. 93-1265)

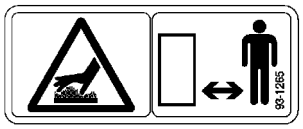

On the engine bulkhead (Part No. 98-5012)

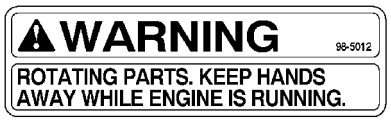

On the drive shaft tunnel (Part No. 80-8760)

On the front of the seat bracket (Part No. 99-2985)

Under the hood (Part No. 100-7304)

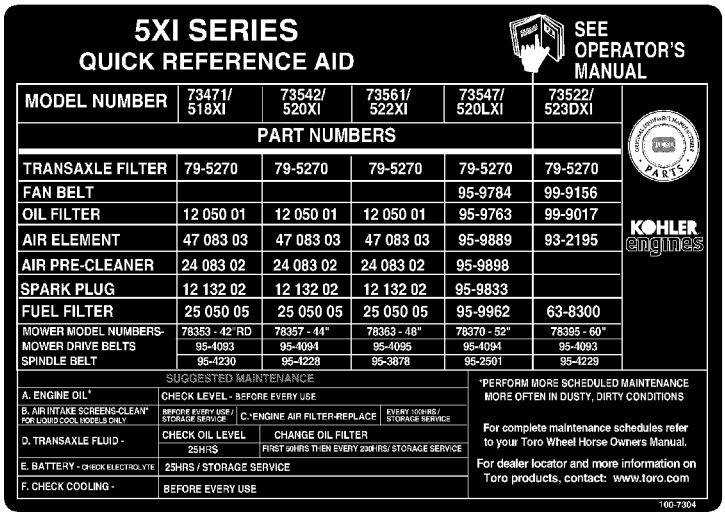

5XI SERIES
QUICK REFERENCE AID

SEE OPERATOR'S MANUAL

MODEL NUMBER	73471/ 518XI	73542/ 520XI	73561/ 522XI	73547/ 520LXI	73522/ 523DXI
PART NUMBERS					
TRANSAXLE FILTER	79-5270	79-5270	79-5270	79-5270	79-5270
FAN BELT				95-9784	99-9156
OIL FILTER	12 050 01	12 050 01	12 050 01	95-9763	99-9017
AIR ELEMENT	47 083 03	47 083 03	47 083 03	95-9889	93-2195
AIR PRE-CLEANER	24 083 02	24 083 02	24 083 02	95-9898	
SPARK PLUG	12 132 02	12 132 02	12 132 02	95-9833	
FUEL FILTER	25 050 05	25 050 05	25 050 05	95-9962	63-8300
MOWER MODEL NUMBERS-	78353 - 42" RD	78357 - 44"	78363 - 48"	78370 - 52"	78395 - 60"
MOWER DRIVE BELTS	95-4093	95-4094	95-4095	95-4094	95-4093
SPINDLE BELT	95-4230	95-4228	95-3878	95-2501	95-4229

SUGGESTED MAINTENANCE

A. ENGINE OIL*	CHECK LEVEL - BEFORE EVERY USE		
B. AIR INTAKE SCREENS-CLEAN* FOR LIQUID COOL MODELS ONLY	BEFORE EVERY USE / STORAGE SERVICE	C. *ENGINE AIR FILTER-REPLACE	EVERY 100HRS / STORAGE SERVICE
D. TRANSAXLE FLUID -	CHECK OIL LEVEL 25HRS	CHANGE OIL FILTER FIRST 50HRS THEN EVERY 200HRS/ STORAGE SERVICE	
E. BATTERY - CHECK ELECTROLYTE	25HRS / STORAGE SERVICE		
F. CHECK COOLING -	BEFORE EVERY USE		

*PERFORM MORE SCHEDULED MAINTENANCE MORE OFTEN IN DUSTY, DIRTY CONDITIONS

For complete maintenance schedules refer to your Toro Wheel Horse Owners Manual.

For dealer locator and more information on Toro products, contact: www.toro.com

100-7304

KOHLER engines

(2) Under the side shield (Part No. 98-5014)

Check Before Operating

Each time before operating your tractor, check the following:

- Fuel level
- Engine oil level
- Debris on the (3) air intake screens
- Debris in the engine area
- Debris on the rear transaxle cover
- The safety interlock system
- The brake

Some of these steps will require that you open the hood or remove the side panels on the tractor.

Opening the Hood

To open the hood:

1. Park the machine on a level surface, disengage the power take off (PTO), set the parking brake, lower the attachment lift, and turn the ignition key to “STOP” to stop the engine. Remove the ignition key.
2. Push the hood latch (Fig. 1), located just above the indicator light panel, to the left.
3. Raise the hood to full height.

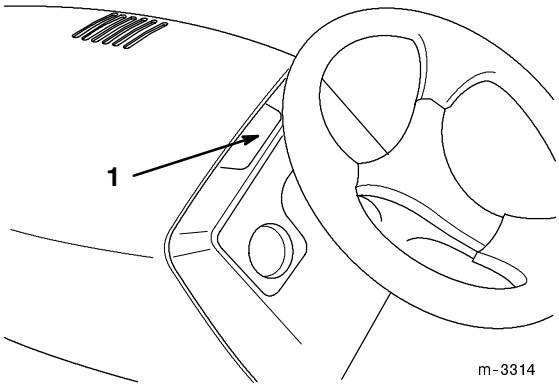

Figure 1

1. Hood latch

CAUTION

POTENTIAL HAZARD
- **Components under the hood will be hot if the tractor has been running.**

WHAT CAN HAPPEN
- **Touching hot components can cause burns.**

HOW TO AVOID THE HAZARD
- **Allow the tractor to cool before performing maintenance or touching components under the hood.**

Closing the Hood

The hood catch is located at the left hand corner of the grill.

1. Press rearward on the hood catch as you begin to lower the hood.
2. Push the hood down until the latch closes.

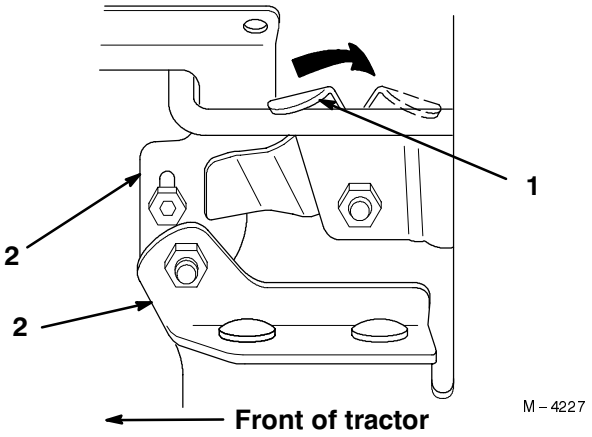

Figure 2

1. Hood catch
2. Hood hinges

Removing the Side Panels

1. Park the machine on a level surface, disengage the power take off (PTO), set the parking brake, lower the attachment lift, and turn the ignition key to “STOP” to stop the engine. Remove the ignition key.
2. Raise the hood.
3. To remove a side panel:
   A. Lift up and twist each of the two side panel latches 90˚, or until they line up with the open slot (Fig. 3).
   B. Pull the top of the side panel toward you until the side panel latches pass through the open slot.
   C. Lift the side panel from the tractor.

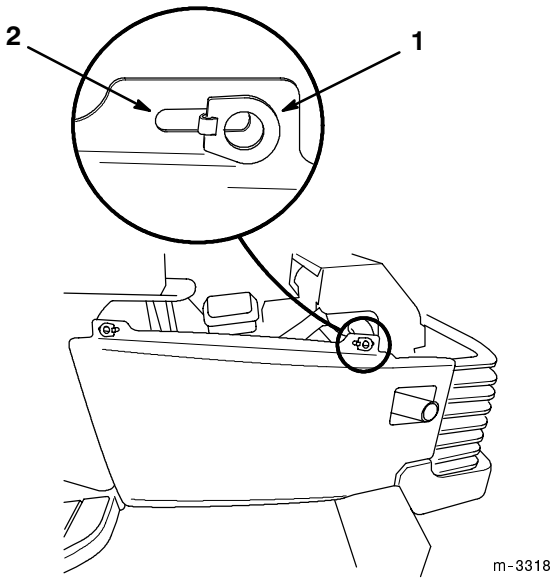

Figure 3

1. Side panel latch
2. Open slot

Adding Fuel

Use UNLEADED Regular Gasoline suitable for automotive use (85 pump octane minimum). Leaded regular gasoline may be used if unleaded regular is not available.

IMPORTANT: Never use methanol, gasoline containing methanol, or gasohol containing more than 10% ethanol because the fuel system could be damaged. Do not mix oil with gasoline.

⚠ DANGER

POTENTIAL HAZARD
- **In certain conditions gasoline is extremely flammable and highly explosive.**

WHAT CAN HAPPEN
- **A fire or explosion from gasoline can burn you, others, and cause property damage.**

HOW TO AVOID THE HAZARD
- **Use a funnel and fill the fuel tank outdoors, in an open area, when the engine is cold. Wipe up any gasoline that spills.**
- **Do not fill the fuel tank completely full. Add gasoline to the fuel tank until the level is 1/4” to 1/2” (6 mm to 13 mm) below the bottom of the filler neck. This empty space in the tank allows gasoline to expand.**
- **Never smoke when handling gasoline, and stay away from an open flame or where gasoline fumes may be ignited by a spark.**
- **Store gasoline in an approved container and keep it out of the reach of children. Never buy more than a 30-day supply of gasoline.**

IMPORTANT: Never use fuel additives containing methanol or ethanol.

⚠ DANGER

POTENTIAL HAZARD
- **When fueling, under certain circumstances, a static charge can develop, igniting the gasoline.**

WHAT CAN HAPPEN
- **A fire or explosion from gasoline can burn you and others and cause property damage.**

HOW TO AVOID THE HAZARD
- **Always place gasoline containers on the ground away from your vehicle before filling.**
- **Do not fill gasoline containers inside a vehicle or on a truck or trailer bed because interior carpets or plastic truck bed liners may insulate the container and slow the loss of any static charge.**
- **When practical, remove gas-powered equipment from the truck or trailer and refuel the equipment with its wheels on the ground.**
- **If this is not possible, then refuel such equipment on a truck or trailer from a portable container, rather than from a gasoline dispenser nozzle.**
- **If a gasoline dispenser nozzle must be used, keep the nozzle in contact with the rim of the fuel tank or container opening at all times until fueling is complete.**

Using Stabilizer/Conditioner

Use a fuel stabilizer/conditioner in the machine to provide the following benefits:

- Keeps gasoline fresh during storage of 90 days or less. For longer storage, drain the fuel tank.
- Cleans the engine while it runs
- Eliminates gum-like varnish buildup in the fuel system, which causes hard starting

IMPORTANT: Do not use fuel additives containing methanol or ethanol.

Add the correct amount of gas stabilizer/conditioner to the gas.

Note: A fuel stabilizer/conditioner is most effective when mixed with fresh gasoline. To minimize the chance of varnish deposits in the fuel system, use fuel stabilizer at all times.

Filling the Fuel Tank

1. Park the machine on a level surface, disengage the power take off (PTO), set the parking brake, lower the attachment lift, and turn the ignition key to “STOP” to stop the engine. Remove the ignition key.
2. Clean around the fuel tank cap and remove the cap. Use a funnel and add fuel until the fuel level is 1/4 to 1/2 inch (6 mm to 13 mm) below the bottom of the filler neck. This space in the tank allows for expansion of the fuel. When filling the tank, make sure that the machine is on a level surface so that adequate air space is allowed. Do not fill the fuel tank completely.
3. Install the fuel tank cap securely. Wipe up any gasoline that may have spilled.

Check the Engine Oil Level

1. Park the machine on a level surface, disengage the power take off (PTO), set the parking brake, lower the attachment lift, and turn the ignition key to “STOP” to stop the engine. Remove the ignition key.
2. Open the hood.
3. Clean around the oil dipstick (Fig. 4) so dirt cannot fall into the dipstick tube and damage the engine.
4. Pull out the oil dipstick and wipe the metal end clean (Fig. 5).
5. Slide the oil dipstick fully into the dipstick tube (Fig. 4). Pull the dipstick out and look at the metal end. If the oil level is low, add oil; refer to Engine Oil, page 27.

IMPORTANT: Do not overfill the crankcase with oil because this may result in engine damage.

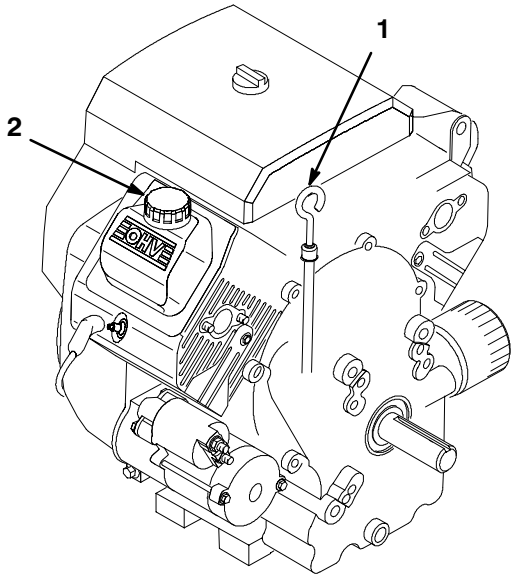

Figure 4

1. Dipstick
2. Oil filler

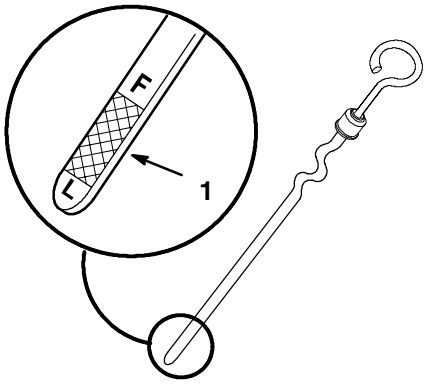

Figure 5

1. Metal end

Check for Debris

IMPORTANT: Operating the engine with a blocked grass screen, dirty or plugged cooling fins, and/or cooling shrouds removed, will result in engine damage from overheating.

1. Park the machine on a level surface, disengage the power take off (PTO), set the parking brake, lower the attachment lift, and turn the ignition key to “STOP” to stop the engine. Remove the ignition key.

2. Check for debris on the (3) air intake screens (Fig. 6). Wipe away debris before each use and/or during use, if required.

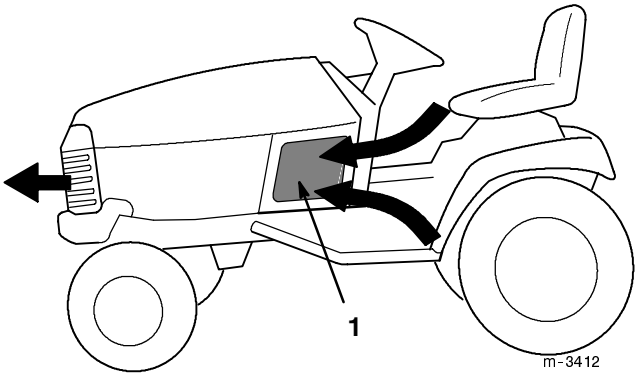

Figure 6

Arrows show air intake and exhaust path

1. Air intake screens (1 of 3 shown)

3. Wipe away any accumulated debris from the rotating air intake screen (Fig. 7).

⚠ DANGER

POTENTIAL HAZARD
- **Rotating air intake screen and drive shaft can cause injury.**

WHAT CAN HAPPEN
- **Fingers, hands or loose clothing can get caught by rotating air intake screen and drive shaft.**

HOW TO AVOID THE HAZARD
- **Do not operate the tractor without the side panels and hood in place.**
- **Keep fingers, hands and clothing clear of rotating air intake screen and drive shaft.**
- **Shut off the engine and remove the ignition key before performing maintenance.**

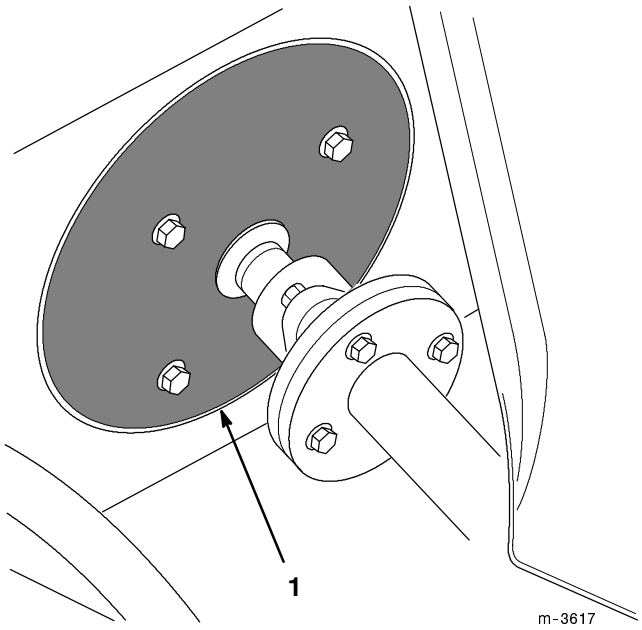

Figure 7

1. Rotating air intake screen

4. Debris can build up in the engine area. Clean any debris build-up with a brush or blower before each use.

   IMPORTANT: It is preferable to blow dirt out (Fig. 8), rather than washing it out. If water is used, keep it away from electrical items.

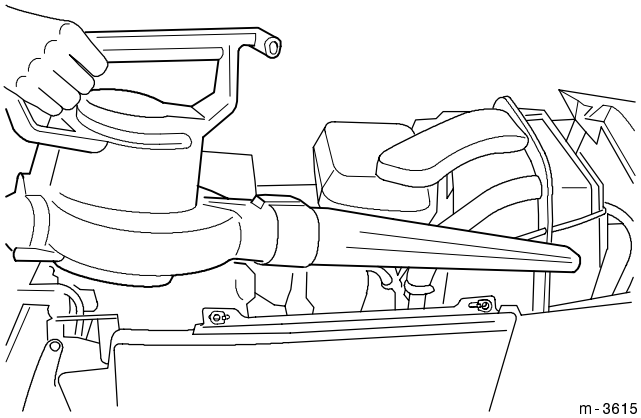

Figure 8

   IMPORTANT: DO NOT HIGH-PRESSURE WASH. High-pressure washing can damage the electrical system or deplete grease.

5. The rear transaxle cover is an air intake area for cooling the transaxle. Clean debris from the rear transaxle cover before operating the tractor (Fig. 9).

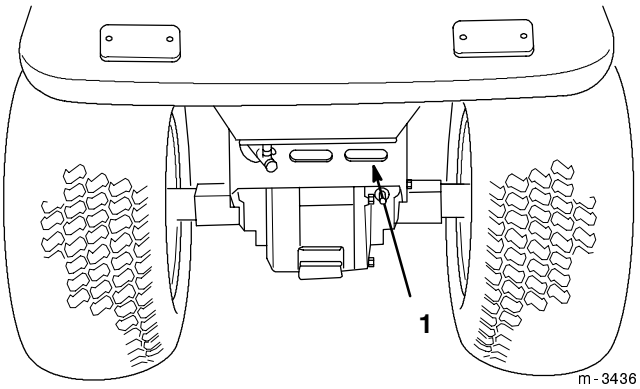

Figure 9

1. Rear transaxle cover

Check the Safety Interlock System

Always check the interlock system before operating the tractor. Instructions for checking the interlock system are found in the Operation section, page 14.

Check the Brake

Refer to Checking and Adjusting the Brake, page 32.

Operation

Think Safety First

Please carefully read all the safety instructions on pages 2–7. Knowing this information could help you, your family, pets or bystanders avoid injury.

Controls

Become familiar with all the controls (Fig. 10) before you start the engine and operate the machine.

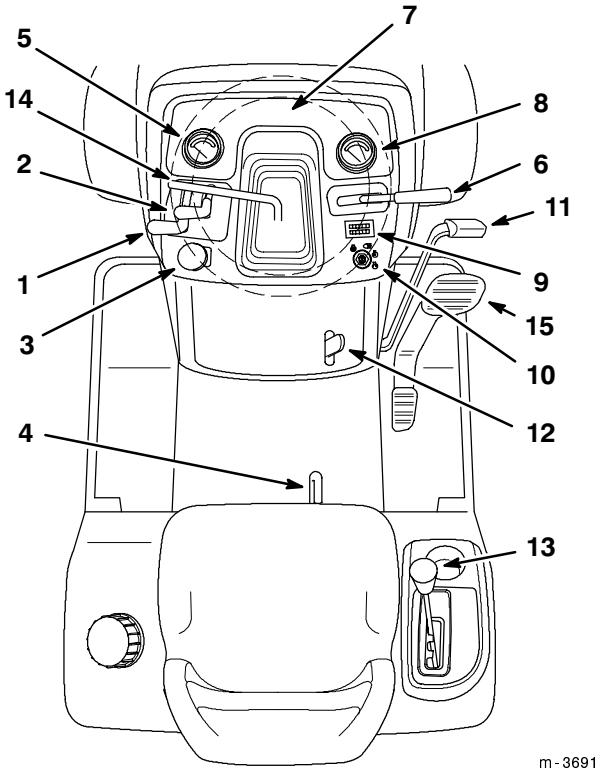

Figure 10

1. Throttle
2. Choke
3. PTO switch
4. Seat adjustment lever
5. Engine oil temperature gauge
6. Attachment lift lever
7. Indicator lights
8. Fuel gauge
9. Hour meter
10. Ignition switch
11. Brake pedal
12. Parking brake lever
13. High-Low range lever
14. Steering wheel tilt lever
15. Traction control pedal

Parking Brake

Always set the parking brake when you stop the machine or leave it unattended.

Setting the Parking Brake

1. Push the brake pedal (Fig. 10) down and hold it in the depressed position. The machine will not drive while the parking brake is set.
2. Lift the parking brake lever (Fig. 10) up and gradually take your foot off the brake pedal. The brake pedal should stay in the depressed (locked) position.

Releasing the Parking Brake

1. Push down on the brake pedal (Fig. 10). The parking brake lever should release.
2. Release the brake pedal.

Starting and Stopping the Engine

Starting

1. Sit down on the seat.
2. Depress the brake pedal.

   Note: The engine will not start unless you fully depress the brake pedal.

3. Push the PTO (power take off) switch to OFF (Fig. 11).
4. Move the choke lever to ON (if the engine is cold) (Fig. 11).
5. Move the throttle lever halfway to FAST (Fig. 11).

6. Turn the ignition key clockwise and hold it in the START position (Fig. 12). When the engine starts, release the key.

   IMPORTANT: Do not crank the engine continuously for more than 10 seconds at a time. If the engine does not start, allow a 60 second cool-down period between starting attempts. Failure to follow these guidelines can burn out the starter.

7. After the engine starts, move the choke lever to OFF (Fig. 11). If the engine stalls or hesitates, move the choke lever back to ON for a few seconds. Then move the throttle lever to the desired setting. Repeat this as required.

   Note: Allowing the engine to warm up before putting it under load will lengthen engine life.

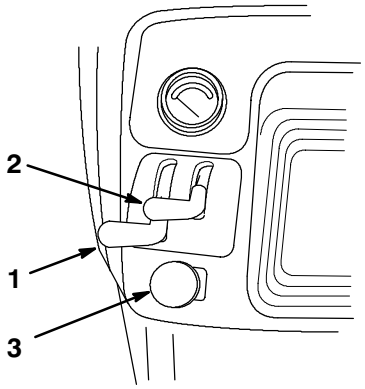

Figure 11

1. Throttle
2. Choke
3. PTO switch

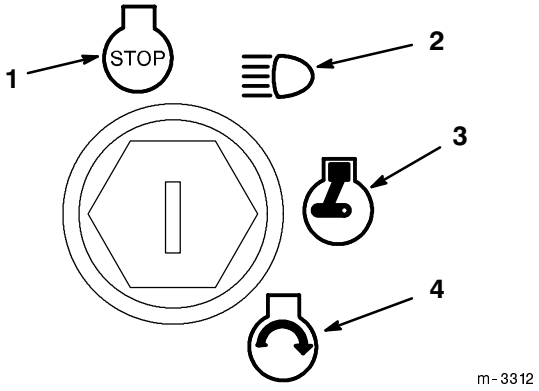

Figure 12

1. Stop
2. Run with lights
3. Run
4. Start

Stopping

1. Move the throttle lever to SLOW (Fig. 11).
2. Allow the engine to run for a short time to cool down.
3. Turn the ignition key to STOP (Fig. 12).
4. Always remove both the ignition and “Key Choice” keys when the equipment is not in use or unattended.

Operating the Power Take Off (PTO)

The power take-off (PTO) switch engages and disengages power to the electric clutch.

If the ignition key is in the RUN or LIGHTS position and the power take off (PTO) is engaged, the PTO indicator light will be on. When this light is on, it is a reminder: the implement is being powered and the starter will not crank while the PTO is engaged. Always turn off the PTO before getting off the seat.

Engaging the Power Take Off (PTO)

1. Depress the brake pedal to stop the machine.
2. Move the throttle lever to FAST.

   IMPORTANT: For best performance, always use full throttle when the power take off (PTO) switch is ON.

3. Pull the power take off (PTO) switch to ON (Fig. 13).

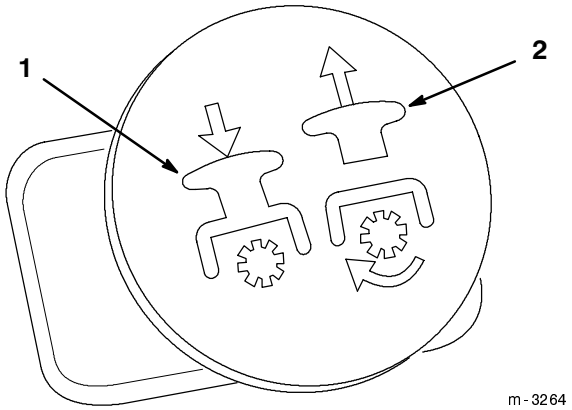

Figure 13

1. Push (off-disengaged) 2. Pull (on-engaged)

Disengaging the Power Take Off (PTO)

1. Push the power take off (PTO) switch to OFF.

The Safety Interlock System

Understanding the Safety Interlock System

The safety interlock system is designed to prevent the engine from starting unless:

- You are sitting on the seat
- The brake pedal is depressed
- The power take off (PTO) is OFF

The safety interlock system is designed to stop the engine if:

- You rise from the seat when the brake pedal is released
- You rise from the seat when the power take off (PTO) is “ON”.

The safety interlock system is designed to stop the power take off (PTO) if:

- You shift into reverse with the power take off (PTO) engaged.

Operating–in–Reverse

An interlock feature is provided that prevents the Power Take Off (PTO) from operating while the tractor is traveling in reverse. If the unit is shifted into reverse while the mower blade or other PTO driven attachment is engaged, the PTO will stop.

Do not mow while backing up unless it is absolutely necessary. If you need to mow while in reverse gear or use other PTO driven attachments (such as a snowthrower or tiller), this no operating-in-reverse interlock may be temporarily deactivated.

Before deactivating this interlock, be sure there are no children present on or near the property where you are using the tractor, and that none are likely to appear while you are mowing or operating an attachment. Be extra observant after you have chosen to

deactivate the interlock because the sound of the tractor's engine might prevent you from being aware that a child or a bystander has entered the area where you are operating the tractor.

If you are certain that you can safely mow in reverse or operate an attachment, deactivate the no operating-in-reverse interlock by turning the "Key Choice" switch (Fig. 14), located on the seat bracket on the right hand side just below the seat, after engaging the blade (PTO). A red light on the front console (Fig. 15) will turn on as a reminder that the no operating-in-reverse interlock has been deactivated. Once the interlock is deactivated it stays in this mode—with your mower blade or PTO-driven attachment operating whenever you back up—and the console light stays on until either the blade (PTO) is disengaged, or the engine is turned off.

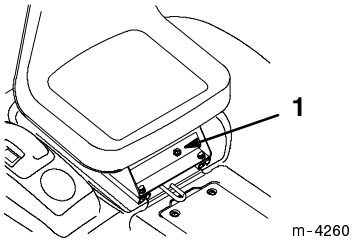

Figure 14

1. Reverse interlock key

Note: Do not insert the "Key Choice" key unless it is absolutely necessary to mow in reverse or operate an attachment. The "Key Choice" key should also be removed from the unit if it will be operated by someone other than a responsible, experienced operator. This will prevent the unit from operating in reverse with the mower blade or other PTO attachment engaged. Always remove both the ignition and the "Key Choice" keys and put them in a safe place out of the reach of children when leaving the unit unattended.

⚠ DANGER

POTENTIAL HAZARD
- **A child or bystander could be backed over by a riding mower with its blade(s) engaged.**

WHAT CAN HAPPEN
- **Blade contact will cause serious personal injury or death.**

HOW TO AVOID THE HAZARD
- **Do not mow in reverse unless absolutely necessary.**
- **Always look backward and down before backing up.**
- **Use "Key Choice" key only if you are certain no children or other bystanders will appear in the mowing area.**
- **Always remove both the ignition and "Key Choice" keys and put them in a safe place out of the reach of children or unauthorized users when leaving the unit unattended.**

Testing the Safety Interlock System

Test the safety interlock system each time before you use the machine. Do not operate the machine if the safety system is not functioning properly. If the safety system does not operate as described below, have an Authorized Service Dealer repair the safety system immediately.

1. Fully depress the brake pedal. Pull the power take-off (PTO) switch to ON. Now turn the ignition key to START. The starter should not crank.

2. Push the power take-off (PTO) switch to OFF and release the brake pedal. Now turn the ignition key to START; the starter should not crank.

3. Fully depress the brake pedal and set the parking brake. Push the PTO switch to OFF and rise from the seat. Now turn the ignition key to START. The starter should not crank.

4. Fully depress the brake pedal and set the parking brake. Push the power take-off (PTO) switch to OFF. Now start the engine. While the engine is running, release the parking brake and rise slightly from the seat; the engine should stop.

5. Fully depress the brake pedal, set the parking brake, push the PTO switch to OFF and start the engine. Pull the PTO switch to ON. Rise slightly from the seat; the engine should stop.

6. With the parking brake released, turn the ignition key to RUN without starting the engine. Pull the PTO switch to ON. You should hear an audible click indicating the PTO is activated and the PTO light will illuminate. Move the foot pedal to reverse. You should hear an audible click indicating the PTO is deactivated and the PTO light should turn off.

7. With the parking brake released, turn the ignition switch to RUN without starting the engine. Pull the PTO switch to ON. Turn the "Key Choice" key and release. The Operating–in–Reverse warning light should illuminate. Move the foot pedal to reverse. The PTO and PTO light on the dash should remain on. Push the PTO switch to OFF. The PTO light and the Operating–in–Reverse warning light should turn off.

Gauges and Indicator Lights

The indicator lights (Fig. 15) illuminate when certain controls are activated and when major malfunctions occur that need immediate attention.

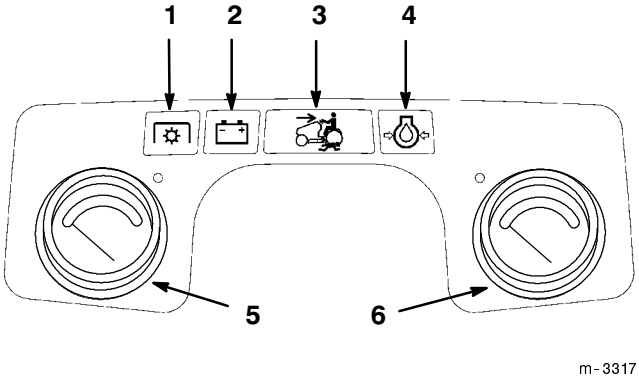

Figure 15

1. PTO (power take off) light
2. Battery light
3. Operating–in–Reverse warning light
4. Oil pressure light
5. Engine oil temperature gauge
6. Fuel gauge

PTO (Power Take Off) Light

When the PTO (power take off) light is ON it indicates the implement is being powered. The PTO clutch must be disengaged before the engine will start.

Battery Light

The battery light will be ON when the key is in the RUN or LIGHTS positions if the battery voltage is below 12.1 volts or above 15.0 volts. If the light comes on at a higher RPM, it is important to have your battery and electrical system checked and the problem corrected.

Operating–in–Reverse Warning Light

The Operating–in–Reverse warning light will illuminate whenever the “Key Choice” key is used to deactivate the operating–in–reverse interlock. It is a reminder that the interlock system is deactivated. The light goes out whenever the power take off (PTO) is disengaged or the engine is shut off. **When the light is on, look behind and use extra caution when backing. Be especially watchful for children and pets.**

Oil Pressure Light

When the oil light is ON it indicates the engine oil pressure is low. After the engine starts the light should go out. When the engine is running, the light comes ON if the oil pressure drops below a safe operating level. If the light comes on while the engine is running, **stop the engine immediately and correct the cause of low oil pressure.**

Engine Oil Temperature Gauge

This gauge shows the oil temperature in the engine. If the gauge enters the red zone, disengage the PTO and allow the engine to cool while continuing to run the engine.

If the gauge does not show temperatures dropping, **stop the engine immediately, clean the air intake screens, and/or correct the cause of high temperature**.

Fuel Level Gauge

This gauge shows the level of fuel remaining.

Hour Meter

The hour meter (Fig. 10) records the amount of time the engine has run. Use it to schedule regular maintenance.

Driving Forward or Backward

1. Stop the tractor.

   IMPORTANT: Never attempt to shift gears with the tractor in motion. Internal transmission damage may result.

   IMPORTANT: Do not force the shift lever. Applying slight pressure to the traction control pedal while shifting will help the gears engage.

2. Shift into high “H” or low “L” forward speed with the High-Low lever (Fig. 10). Use Low for best mowing performance and smoothest operation with all attachments. Use High for transporting or where conditions permit higher speed.

⚠ DANGER

POTENTIAL HAZARD
- **Excessive speed on slopes can result in rollover accidents or loss of control.**

WHAT CAN HAPPEN
- **Rollover accidents or loss of control can result in serious injury or death.**

HOW TO AVOID THE HAZARD
- **Never shift into neutral while moving.**
- **Never allow tractor to roll freely in neutral on slopes.**
- **Read, understand, and follow all instructions in the operator’s manual and on the machine before starting.**

3. Place the throttle control in the FAST position for best performance. (The throttle control regulates engine revolutions per minute.)

4. Place your foot on the traction control pedal and slowly press on the top of the pedal to move forward, or on the bottom of the pedal to move backward (Fig. 16). The farther you move the pedal in either direction, the faster the machine will move in that direction.

5. To slow down, release the pressure on the traction control pedal and step on the brake pedal.

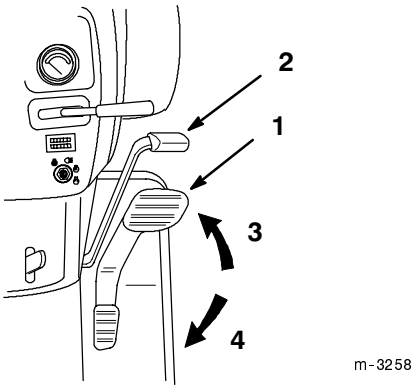

Figure 16

1. Traction control pedal
2. Brake pedal
3. Forward
4. Backward

Stopping the Machine

To stop the machine, release the traction control pedal, step on the brake pedal, disengage the power take off (PTO), lower the attachment lift, and turn the ignition key to STOP. Also set the parking brake if you leave the machine unattended; refer to Setting the Parking Brake, page 14. Remember to remove both the ignition and "Key Choice" keys from the switches.

⚠ CAUTION

POTENTIAL HAZARD
- **Someone could move or attempt to operate the tractor while it is unattended.**

WHAT CAN HAPPEN
- **Children or bystanders may be injured if they use the tractor.**

HOW TO AVOID THE HAZARD
- **Always remove both the ignition and "Key Choice" keys and set the parking brake when leaving the machine unattended, even if just for a few minutes.**

Attachment Power Lift

The attachment power lift (Fig. 17) is used to raise and lower attachments.

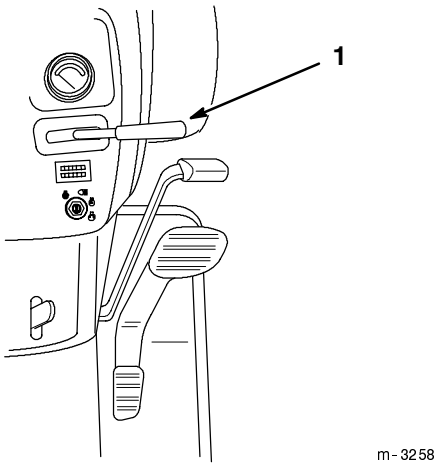

Figure 17

1. Attachment power lift

Raising Attachments

1. Start the tractor.
2. Pull the lift lever UP to raise the attachment (Fig. 18). This will lift and hold the attachment in the raised position.

⚠ WARNING

POTENTIAL HAZARD
- **When the engine is off, attachments in the raised position can gradually lower.**

WHAT CAN HAPPEN
- **Someone nearby may be pinned or injured by the attachment as it lowers.**

HOW TO AVOID THE HAZARD
- **Always lower the attachment lift each time you shut off the tractor.**

Lowering Attachments

1. Start the tractor.
2. Push the lift lever DOWN to lower the attachment (Fig. 18).

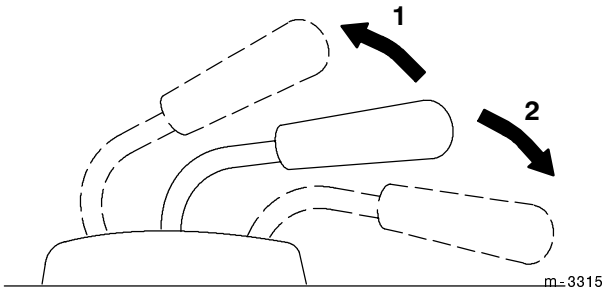

Figure 18

1. Lift lever-Up
2. Lift lever-Down

Positioning the Seat

The seat can move forward and backward. Position the seat where you have the best control of the machine and are most comfortable.

1. To adjust, move the lever sideways to unlock seat (Fig. 19).
2. Slide the seat to the desired position and release the lever to lock the seat into position.

   IMPORTANT: Be sure that the seat is locked in position before operating.

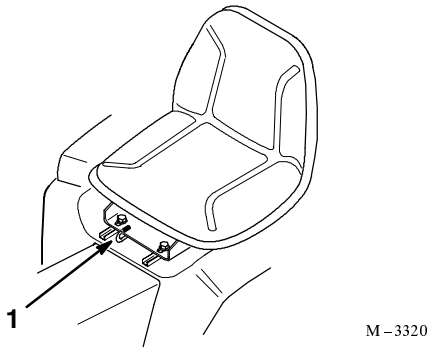

Figure 19

1. Adjustment lever

Headlights

The headlights are turned on by turning the ignition key to the LIGHTS position. They can be turned on even if the engine is not running. Remove the ignition key when leaving the machine unattended so that the headlights cannot be turned on and discharge the battery.

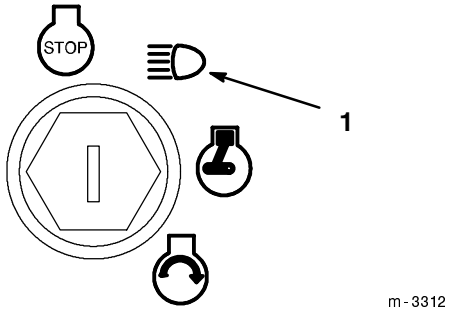

Figure 20

1. Lights

Positioning the Tilt Steering Wheel

The steering wheel has four tilt locations. Position the steering wheel where you have the best control of the machine and are most comfortable.

1. Lift the tilt lever to release the lock (Fig. 21).
2. Move the steering wheel to a comfortable position; then release the lever to lock it in place.

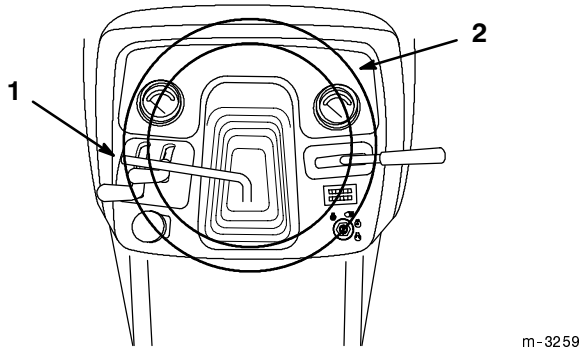

Figure 21

1. Tilt lever
2. Steering wheel

The Smart Turn™ Steering Feature

The Smart Turn™ Steering feature automatically lowers the speed of the tractor in tight turns. The decrease in speed is directly proportional to the sharpness of the turn, up to a maximum speed reduction of 40 percent. This allows you to make turns at higher speeds without having to change the speed control position. After the turn, the original speed is automatically restored.

The Smart Turn™ Steering feature does not affect engine speed.

This system was set at the factory and should not need adjustment.

⚠ DANGER

POTENTIAL HAZARD
- **Excessive speed when turning can result in rollover accidents.**

WHAT CAN HAPPEN
- **Rollover accidents can result in serious injury or death.**

HOW TO AVOID THE HAZARD
- **Do not rely on the Smart Turn™ Steering feature to avoid accidents while turning.**
- **Read, understand, and follow all instructions in the operator's manual and on the machine before starting.**

Pushing the Machine by Hand

IMPORTANT: Always push the machine by hand. Never tow the machine because transmission damage may occur.

To Push the Machine

1. Disengage the power take off (PTO) and turn the ignition key to “STOP” to stop the engine.
2. Move the High-Low range lever to the neutral position “N.” This allows the rear wheels to turn freely.
3. Place the lever back in High or Low after moving the machine, and set the parking brake.

Maintenance

Service Interval Chart

Service Operation	Each Use	5 Hours	25 Hours	50 Hours	100 Hours	200 Hours	Storage Service
Engine Oil—check level	X						X
Brake—check	X						X
Safety System—check	X						X
(3) Air Intake Screens—clean*	X						X
Engine Area—clean*	X						X
Rear Transaxle Cover—clean*	X						X
Engine Air Precleaner—clean*			X				X
Tires—check pressure			X				X
Battery—check electrolyte level			X				X
Transaxle—check oil level			X				
Lubrication				X			X
PTO (Power Take Off) Belt—check tension		Initial		X			X
Engine Oil—change		Initial			X		X
Engine Air Filter—replace*					X		X
Fuel Filter—replace					X		X
Engine Oil Filter—change						X	X
Transaxle—change oil				Initial		X	X
Transaxle—change oil filter				Initial		X	X
Spark Plug(s)—change						X	X
Chipped Surfaces—paint							X
* More often in dusty, dirty conditions							

IMPORTANT: Refer to your engine operator's Manual for additional engine maintenance procedures.

⚠ CAUTION

POTENTIAL HAZARD
- **If you leave the key in the ignition switch, someone could start the engine.**

WHAT CAN HAPPEN
- **Accidental starting of the engine could seriously injure you or other bystanders.**

HOW TO AVOID THE HAZARD
- **Remove the key from the ignition switch and pull the wire(s) off the spark plug(s) before you do any maintenance. Also push the wire(s) aside so it does not accidentally contact the spark plug(s).**

Air Cleaner

Service Interval/Specification

Foam Element: Clean and re-oil after every 25 operating hours, or yearly, whichever occurs first.

Paper Element: Replace after every 100 operating hours or yearly, whichever occurs first.

Note: Service the air cleaner more frequently (every few hours) if operating conditions are extremely dusty or sandy.

Removing the Foam and Paper Elements

1. Disengage the power take off (PTO), set the parking brake, lower the attachment lift, and turn the ignition key to “STOP” to stop the engine. Remove the ignition key.

2. Open the hood.

3. Clean around the air cleaner to prevent dirt from getting into the engine and causing damage. Unhook the latches and remove the air cleaner cover (Fig. 22).

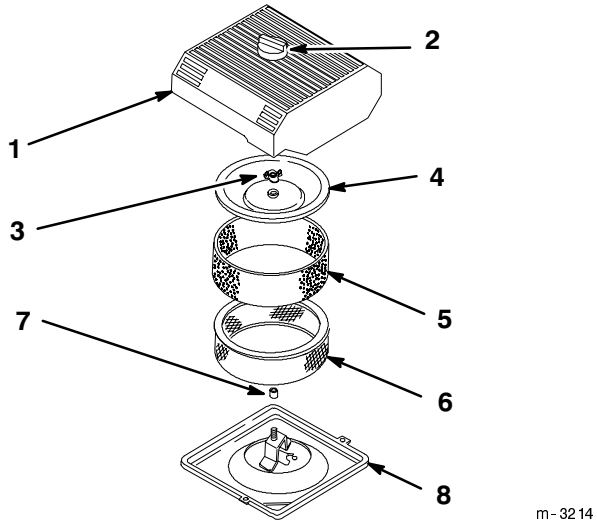

Figure 22

1. Air cleaner cover
2. Knob
3. Cover nut
4. Cover
5. Foam element
6. Paper element
7. Rubber seal
8. Air cleaner base

4. Carefully slide the foam element off the paper element (Fig. 22).

5. Unscrew the cover nut and remove the cover and paper element (Fig. 22).

Cleaning the Foam Element

1. Wash the foam element in liquid soap and warm water. When the element is clean, rinse it thoroughly.
2. Dry the element by squeezing it in a clean cloth.
3. Put one or two ounces of oil on the element (Fig. 23). Squeeze the element to distribute the oil.

   IMPORTANT: Replace the foam element if it is torn or worn.

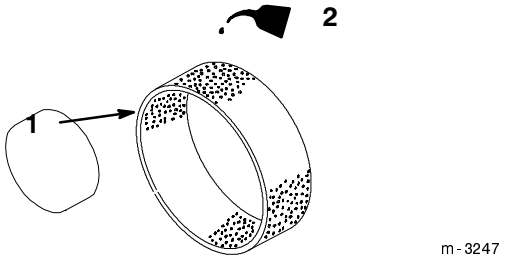

Figure 23

1. Foam element 2. Oil

Checking the Paper Element

Inspect the element for tears, an oily film, and damage to the rubber seal (Fig. 24).

IMPORTANT: Never clean the paper element with pressurized air or liquids, such as solvent, gas, or kerosene. Replace the element if it is damaged or cannot be cleaned thoroughly.

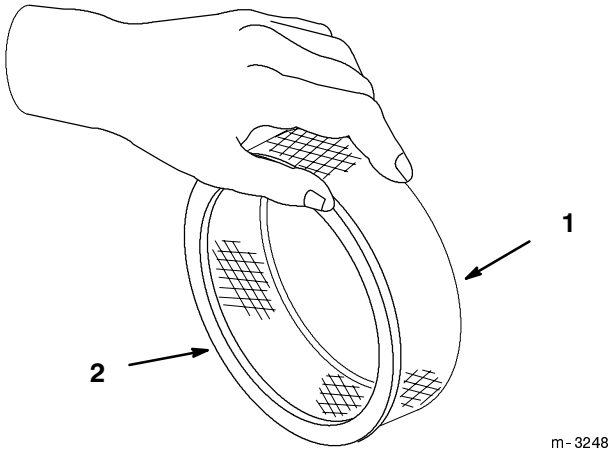

Figure 24

1. Paper element 2. Rubber seal

IMPORTANT: To prevent engine damage, always operate the engine with the complete foam and paper air cleaner assembly installed.

Installing the Foam and Paper Elements

1. Carefully slide the foam element onto the paper air cleaner element (Fig. 22).
2. Slide the air cleaner assembly and cover onto the long rod. Now screw the cover nut finger-tight against the cover (Fig. 22).

   Note: Make sure the rubber seal is flat against the air cleaner base and cover.

3. Install the air cleaner cover and hook latches (Fig. 22).
4. Close the hood.

Engine Oil

Service Interval/Specification

Change oil:

- After the first 5 operating hours.
- After every 100 operating hours.

Oil Type: Detergent oil (API service SG or SH)

Crankcase Capacity: w/filter, 2.1 qts. (2.0 l)

Viscosity: See the table below.

USE THESE SAE VISCOSITY OILS

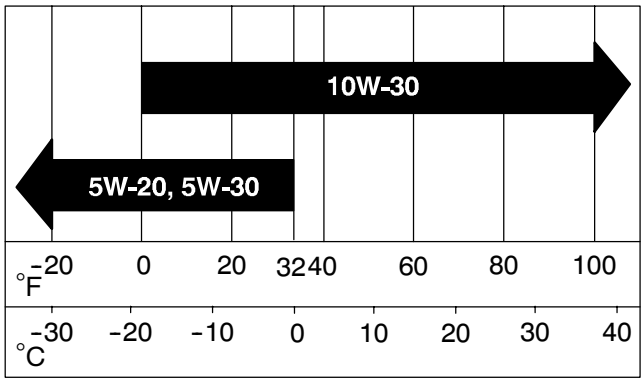

Changing/Draining the Engine Oil

1. Start the engine and let it run for five minutes. This warms the oil so it drains better.
2. Park the machine so that the drain side is slightly lower than the opposite side to ensure that the oil drains completely. Then disengage the power take off (PTO), set the parking brake, lower the attachment lift, and turn the ignition key to "STOP" to stop the engine. Remove the ignition key.
3. Open the hood.

⚠ CAUTION

POTENTIAL HAZARD
- **Components under the hood will be hot if the tractor has been running.**

WHAT CAN HAPPEN
- **Touching hot components can cause burns.**

HOW TO AVOID THE HAZARD
- **Allow the tractor to cool before performing maintenance or touching components under the hood.**

4. Place a pan below the oil drain. Open the drain by turning it counterclockwise 1/8 turn and pulling out on it (Fig. 25).
5. When the oil has drained completely, close the drain by pushing it in and turning it clockwise, 1/8 turn.

   Note: Dispose of the used oil at a certified recycling center.

6. Slowly pour approximately 80% of the specified amount of oil into the oil filler tube (Fig. 27). Now check the oil level; refer to Checking the Engine Oil Level, page 11. Slowly add additional oil to bring the oil level to the FULL mark on the dipstick.

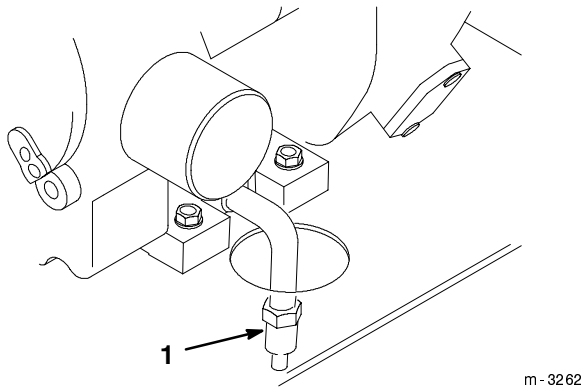

Figure 25

1. Oil drain

IMPORTANT: Overfilling the crankcase with oil may cause engine damage.

Changing the Engine Oil Filter

Service Interval/Specification

Replace the oil filter every 200 hours of operation or every other oil change.

1. Drain the oil from the engine; refer to Changing/Draining Oil, page 27.

2. Remove the old filter and wipe the filter adapter (Fig. 26) gasket surface.

3. Apply a thin coat of new oil to the rubber gasket on the replacement filter (Fig. 26).

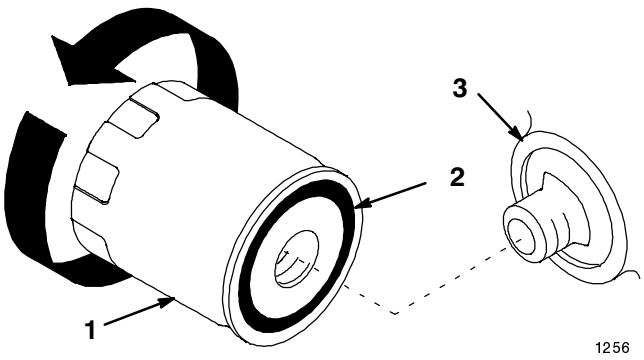

Figure 26

1. Oil filter
2. Gasket
3. Adapter

4. Install the replacement oil filter to the filter adapter. Turn the oil filter clockwise until the rubber gasket contacts the filter adapter, then tighten the filter an additional 1/2 turn (Fig. 26).

5. Fill the crankcase with the correct type of new oil; refer to Changing/Draining Oil, page 27.

Note: Dispose of the oil filter properly. Recycle in accordance with local codes.

Spark Plugs

Service Interval/Specification

Change the spark plugs after every 200 operating hours. Make sure the air gap between the center and side electrodes is correct before installing the spark plugs. Use a spark plug wrench for removing and installing the spark plugs and a gapping tool/feeler gauge to check and adjust the air gap.

Type: Champion RC-12YC (or equivalent)
Air Gap: 0.030” (0.76 mm)

Removing the Spark Plug

1. Disengage the power take off (PTO), set the parking brake, lower the attachment lift, and turn the ignition key to “STOP” to stop the engine. Remove the ignition key.
2. Open the hood.
3. Pull the wire(s) off the spark plug(s) (Fig. 27). Now clean around the spark plug(s) to prevent dirt from falling into the engine and potentially causing damage.
4. Remove the spark plug(s) and metal washer.

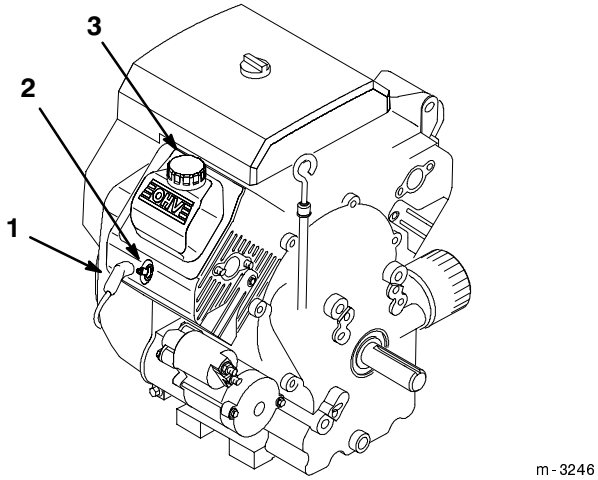

Figure 27

1. Spark plug wire
2. Spark plug
3. Oil filler

Checking the Spark Plugs

1. Look at the center of the spark plug(s) (Fig. 28). If you see light brown or gray on the insulator, the engine is operating properly. A black coating on the insulator usually means the air cleaner is dirty.

   IMPORTANT: Never clean the spark plug(s). Always replace the spark plug(s) when it has: a black coating, worn electrodes, an oily film, or cracks.

2. Check the gap between the center and side electrodes (Fig. 28). Bend the side electrode (Fig. 28) if the gap is not correct.

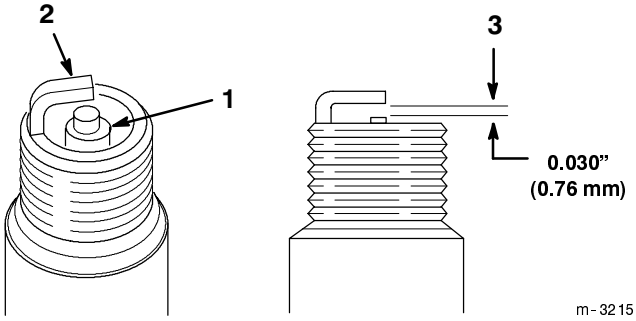

Figure 28

1. Center electrode insulator
2. Side electrode
3. Air gap (not to scale)

Installing the Spark Plugs

1. Install the spark plugs and metal washer. Make sure the air gap is set correctly.
2. Tighten the spark plugs to 18/22 ft-lb (24.4/29.8 Nm).
3. Push the wires onto the spark plugs (Fig. 27).
4. Close the hood.

Greasing and Lubrication

Service Interval/Specification

Grease the machine after every 50 operating hours or yearly, whichever occurs first. Grease more frequently when operating conditions are extremely dusty or sandy.

Grease Type: General-purpose grease.

How to Grease

1. Disengage the power take off (PTO), set the parking brake, lower the attachment lift, and turn the ignition key to “STOP” to stop the engine. Remove the ignition key.
2. Clean the grease fittings with a cloth. Make sure to scrape off any paint from the front of the fitting(s).
3. Connect a grease gun to the fitting. Pump grease into the fittings until grease begins to ooze out of the bearings.
4. Wipe up any excess grease.

Where to Add Grease

1. Lubricate the left-hand and right-hand spindles until grease begins to ooze out of the bearings (Fig. 29).
2. Lubricate the front axle pivot (Fig. 29).

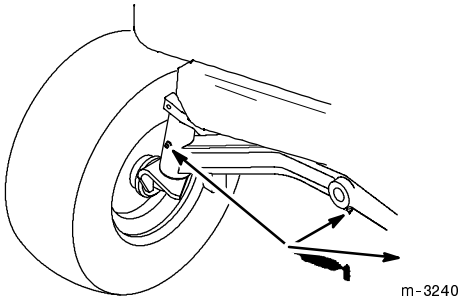

Figure 29

3. Open the drive shaft maintenance cover on the tractor tunnel near the seat by unscrewing the two screws securing it, then raising it (Fig. 30).

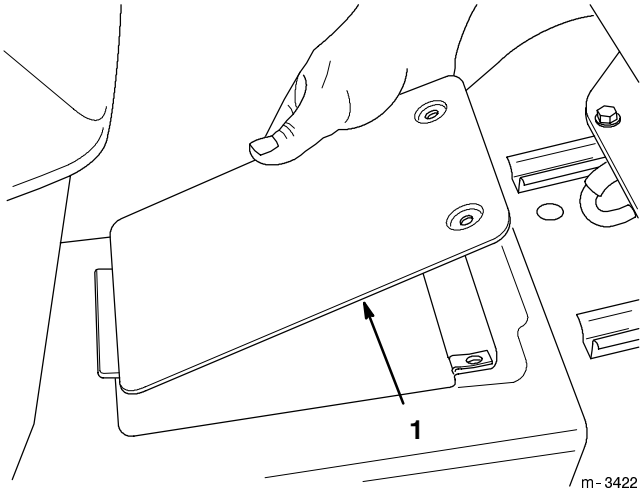

Figure 30

1. Drive shaft maintenance cover

⚠ DANGER

POTENTIAL HAZARD
- **Rotating shaft or cooling fan can cause injury.**

WHAT CAN HAPPEN
- **Fingers, hands, feet, hair, etc. can get caught by shaft or fan.**
- **Loose clothing can get caught by shaft.**

HOW TO AVOID THE HAZARD
- **Do not operate the tractor without the drive shaft cover in place.**
- **Keep hands and arms clear of rotating shaft or fan.**

4. Lubricate the three grease fittings (Fig. 31).

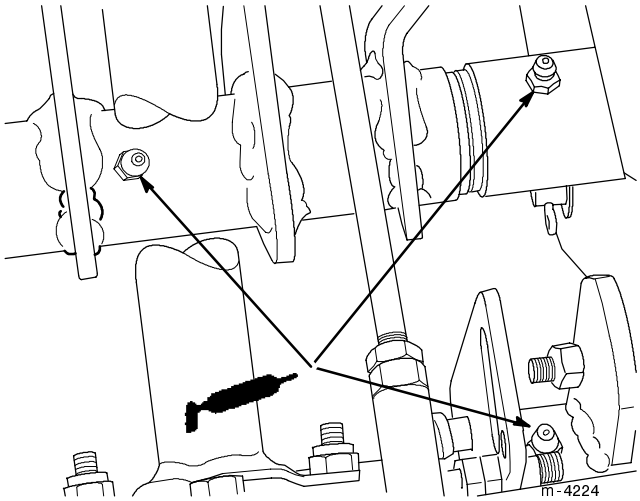

Figure 31

5. Replace and secure the cover.

6. Grease the fitting on the brake pedal (Fig. 32).

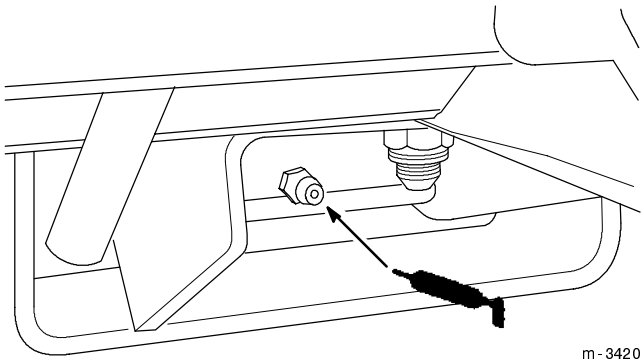

Figure 32

Manual Steering

Put one pump of grease into the steering housing (from underneath the frame) (Fig. 33) every 50 hours.

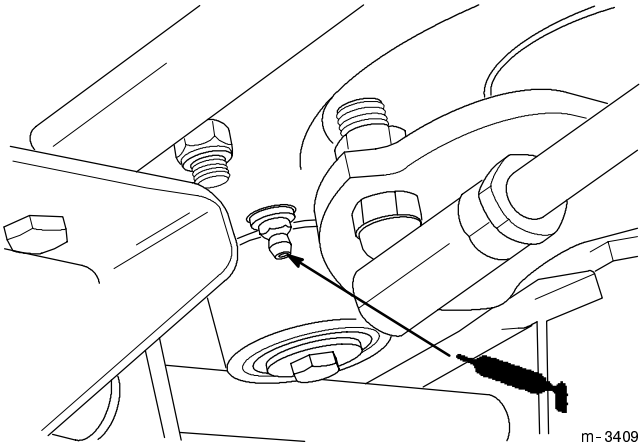

Figure 33

Tire Pressure

Service Interval/Specification

Maintain the air pressure in the front and rear tires as specified. Check the pressure at the valve stem after every 25 operating hours or monthly, whichever occurs first (Fig. 34). Check the tires when they are cold to get the most accurate pressure reading.

Pressure: 20 psi (138 kPa) front and rear

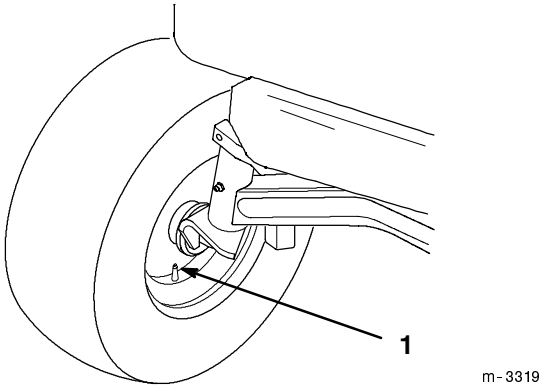

Figure 34

1. Valve stem

Brake

Always set the parking brake when you stop the machine or leave it unattended. Check the brake before each use. If the parking brake does not hold securely, an adjustment is required.

Checking the Brake

1. Park the machine on a level surface, disengage the power take off (PTO), put the High-Low range lever in “N,” set the parking brake, and turn the ignition key to “STOP” to stop the engine. Remove the ignition key.
2. The rear wheels must lock and skid when you try to push the tractor forward. Adjustment is required if the wheels turn and do not lock; refer to Adjusting the Brake.

Adjusting the Brake

The brake adjustment is at the rear of the tractor (Fig. 36). If the parking brake does not hold securely, an adjustment is required.

1. Check the brake before you adjust it; refer to Checking the Brake.
2. Place the transmission in neutral.
3. Depress the brake pedal. There should be 2” (51 mm) of free travel (Fig. 35) before the brake begins to engage.

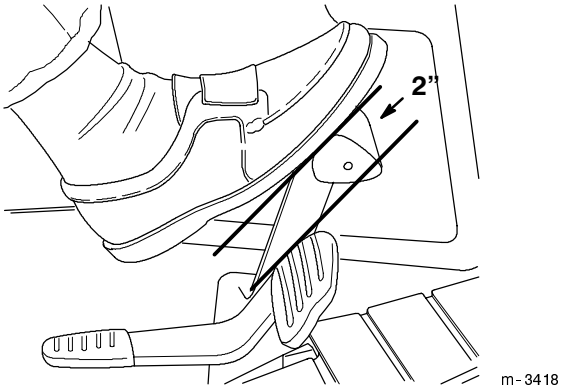

Figure 35

4. Turn the brake adjustment nut (Fig. 36) until there is 2” (51 mm) of free travel.

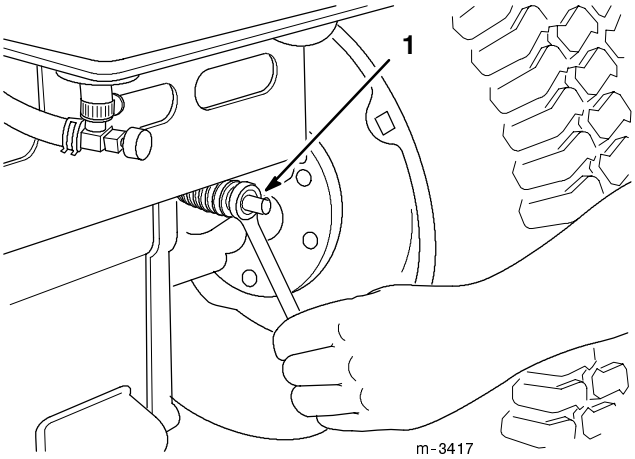

Figure 36

1. Brake adjustment nut

IMPORTANT: Do not overtighten the adjustment nut.

IMPORTANT: With the parking brake released, the rear wheels must rotate freely when you push the tractor. If brake action and free wheel rotation cannot be achieved, contact your Authorized Service Dealer immediately.

Fuel Tank

Draining The Fuel Tank

DANGER

POTENTIAL HAZARD
- **In certain conditions gasoline is extremely flammable and highly explosive.**

WHAT CAN HAPPEN
- **A fire or explosion from gasoline can burn you, others, and cause property damage.**

HOW TO AVOID THE HAZARD
- **Drain gasoline from the fuel tank when the engine is cold. Do this outdoors in an open area. Wipe up any gasoline that spills.**
- **Never drain gasoline near an open flame or where gasoline fumes may be ignited by a spark.**
- **Never smoke a cigarette, cigar or pipe near the tractor.**

1. Park the machine on a level surface to ensure that the fuel tank drains completely. Then disengage the power take off (PTO), set the parking brake, lower the attachment lift, and turn the ignition key to “STOP” to stop the engine. Remove the ignition key.

2. Close the fuel shut-off valve at the fuel tank (Fig. 37 & 38).

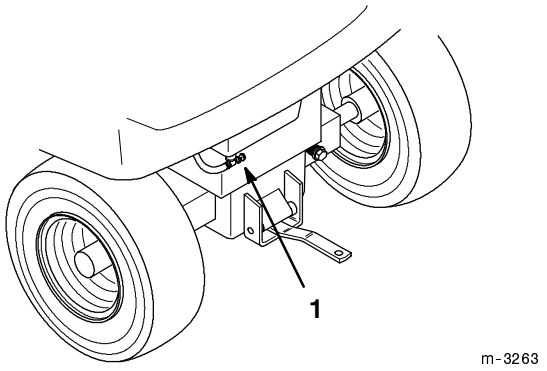

Figure 37

1. Fuel shut-off valve

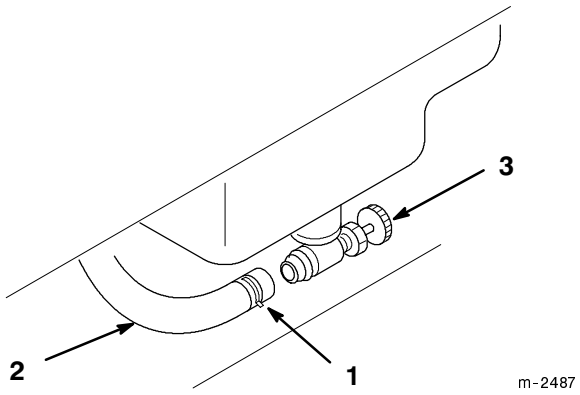

Figure 38

1. Hose clamp
2. Fuel line
3. Fuel shut-off valve

3. Loosen the hose clamp and slide it up the fuel line away from the fuel shut-off valve (Fig. 38).

4. Pull the fuel line off the fuel shut-off valve (Fig. 38). Some fuel will flow out from the hose as it is disconnected from the valve. Attach a 5/16 ID hose to the valve to help drain the fuel into the container. Open the valve and allow gasoline to drain into a gas can or drain pan.

   IMPORTANT: Do not turn or unscrew the fuel shut-off valve.

5. Install the fuel line onto the fuel shut-off valve. Slide the hose clamp close to the valve to secure the fuel line (Fig. 38). The fuel shut-off valve should normally be left open, except for service on the fuel system or when the tractor is transported on a trailer.

Fuel Filter

Service Interval/Specification

Replace the fuel filter after every 100 operating hours.

Replacing the Fuel Filter

1. Disengage the power take off (PTO), set the parking brake, lower the attachment lift, and turn the ignition key to “STOP” to stop the engine. Remove the ignition key.
2. Close the fuel shut-off valve at the fuel tank (Fig. 37 & 38).
3. Open the hood and remove the side panels.
4. Squeeze the ends of the hose clamps together and slide them away from the filter (Fig. 39).
5. Remove the filter from the fuel lines.

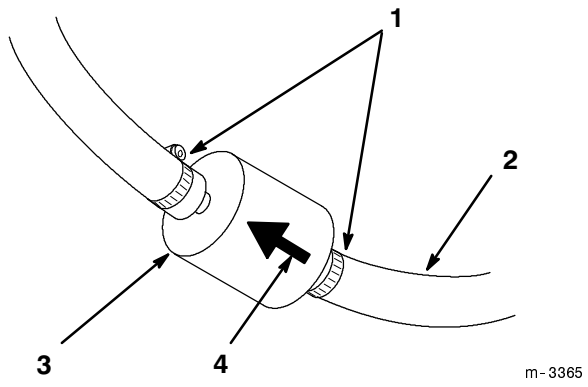

Figure 39

1. Hose clamp
2. Fuel line
3. Filter
4. Flow direction arrow

6. Install a new filter and move the hose clamps close to the filter. Make sure the flow direction arrow points toward the engine.
7. Open the fuel shut-off valve at the fuel tank (Fig. 37 & 38).
8. Replace the side panels and close the hood.

Front Wheel Toe-In

Service Interval/Specification

Maintaining correct front wheel toe-in is important for safety, ”Smart Turn” steering operation, and ease of use. If uneven tire wear, lawn scuffing or hard steering develop, adjustment may be required. Check the toe-in after every 100 operating hours or once a year, whichever occurs first (Fig. 40).

Maintain the following specification: 1/8-1/4 inch (3.5-6.5 mm) toe-in on the front wheels.

Measuring Toe-In

1. Disengage the power take off (PTO), set the parking brake, lower the attachment lift, and turn the ignition key to “STOP” to stop the engine. Remove the ignition key.
2. Turn the wheels straight ahead.
3. Push the front of the tires out to remove normal looseness in the linkage.
4. Measure the distance between both of the front tires at spindle level (at the front and rear of the wheels) (Fig. 40).
5. The front measurement should be 1/8” to 1/4” (3 to 6 mm) less than the rear measurement. If adjustment is needed, follow the instructions in Adjusting Toe-In, page 35.

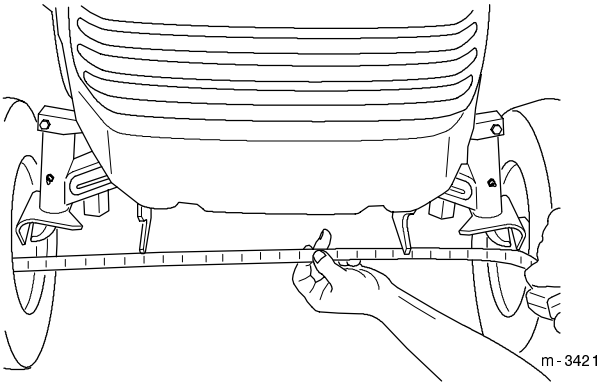

Figure 40

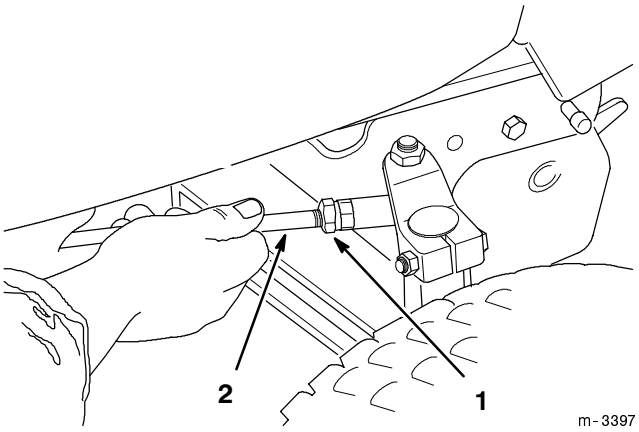

Figure 41

1. Jam nut
2. Steering rod

Adjusting Toe-In

1. Loosen the jam nuts at the ends of the steering rods (Fig. 41).
2. Rotate both steering rods equal amounts to adjust the toe-in to 1/8” to 1/4” (3 to 6 mm).
3. Hold each tie rod end with one wrench and tighten the jam nut with a second wrench.

   IMPORTANT: Make sure that the flat surface on the top of the front tie rod ends is parallel to the bottom of the steering arm (Fig. 42).

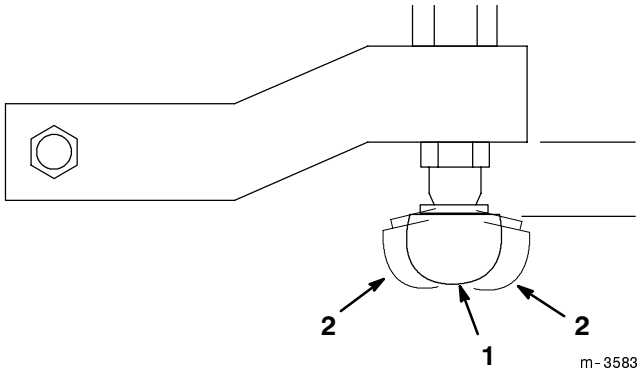

Figure 42

View from front of tractor looking at end of tie rod

1. This
2. Not this

4. Recheck the toe-in; refer to Measuring Toe-In, page 35.

Transaxle Fluid

Service Interval/Specification

Check the fluid level every 25 hours. Always keep the fluid level in the correct operating range on the dipstick when the transaxle is cold.

Fluid Type: SAE 10W-30 Detergent oil (API service SG, SH or above)

Checking the Fluid Level

1. Park the machine on a level surface.
2. Disengage the power take off (PTO), set the parking brake, lower the attachment lift, and turn the ignition key to "STOP" to stop the engine. Remove the ignition key.
3. Tilt the seat up.
4. Clean around the transmission dipstick (Fig. 43) so dirt cannot fall into the filler hole and damage the transaxle.

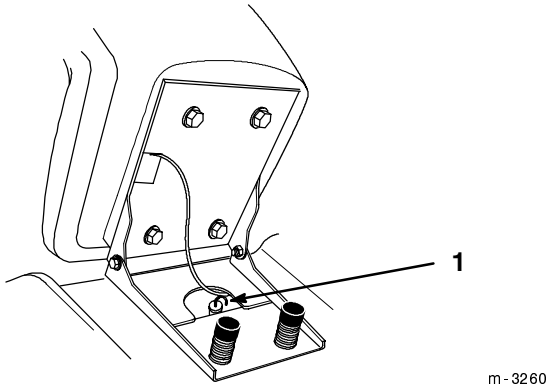

Figure 43

1. Transmission dipstick and filler tube

5. Pull out the transmission dipstick and wipe the metal end clean (Fig. 43).
6. Slide the dipstick fully into the filler tube (Fig. 5). Pull the dipstick out and look at the metal end. When the transaxle is cold, oil should be in the operating range, below the FULL line on the dipstick (Fig. 44).
7. If the oil level is low, slowly pour only enough SAE 10W-30 detergent oil into the filler tube to raise the level to the FULL line.

   IMPORTANT: Do not fill above the FULL line as fluid may overflow.

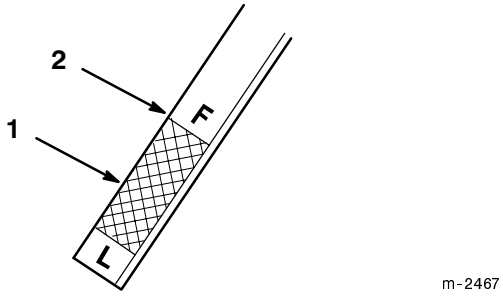

Figure 44

1. Operating range
2. FULL line

Changing Transaxle Oil

Replace the transaxle fluid at 50 hours initially, then every 200 hours thereafter.

Fluid Type: SAE 10W-30 Detergent oil (API service SG, SH or above)

Transaxle Capacity:

Total system capacity: 6.0 qts.
Approximate refill capacity: 4.5 qts.

1. Warm up the transaxle oil by driving the tractor.

2. Park the machine on a level surface to ensure that the oil drains completely. Then turn off the power take off (PTO), set the parking brake, lower the attachment lift, and turn the ignition key to “STOP” to stop the engine. Remove the ignition key.

3. Place a pan below the transaxle drain. Open the drain by removing the plug (Fig. 45).

4. When the oil has drained completely, wipe the plug clean, apply pipe sealant to the plug, and install it.

   Note: Dispose of the used oil at a certified recycling center.

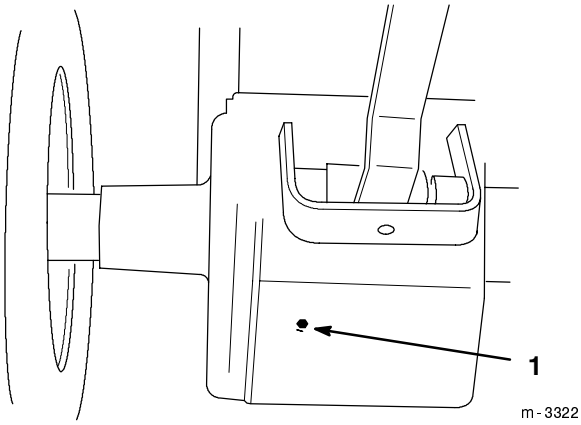

Figure 45

1. Transaxle drain plug

5. Change the transaxle filter; refer to Changing the Transaxle Filter, page 37.

6. Slowly pour the specified refill capacity of oil into the filler tube (Fig. 43).

7. Start the engine, let it run for 30 seconds at high idle, and cycle the steering wheel several times (power steering models only) to fill the filter and hydraulic lines. Then shut off the engine.

8. Now check the fluid level; refer to Checking Transaxle Fluid Level, page 36. Slowly add additional oil to bring the oil level to the FULL mark on the dipstick.

Changing the Transaxle Filter

Service Interval/Specification

Replace the transaxle filter after the first 50 hours; then every 200 hours.

1. Drain the oil from the transaxle; refer to Changing/Draining Transaxle Fluid, page 36.

2. Remove the transaxle filter and wipe the filter adapter (Fig. 46) gasket surface.

3. Apply a thin coat of new oil to the rubber gasket on the replacement filter (Fig. 46).

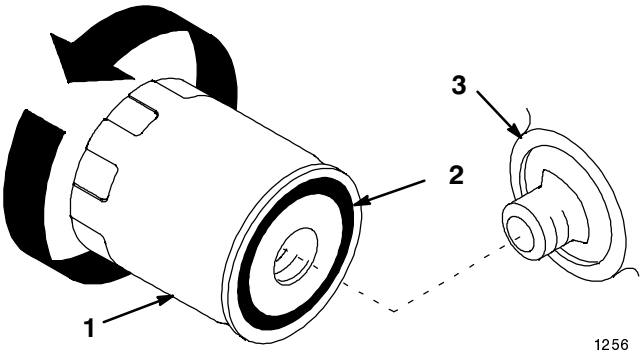

Figure 46

1. Transaxle filter
2. Gasket
3. Adapter

4. Install the replacement transaxle filter to the filter adapter. Turn the filter clockwise until the rubber gasket contacts the filter adapter, then tighten the filter an additional 3/4 turn (Fig. 46).

5. Fill the transaxle with the proper type of new oil; refer to Changing/Draining Transaxle Fluid, page 36.

Fuses

Service Interval/Specification

The electrical system is protected by fuses. They require no maintenance. However, if a fuse blows, check the component and circuit for a malfunction or short. To replace a fuse, pull it out of the fuse box (Fig. 47).

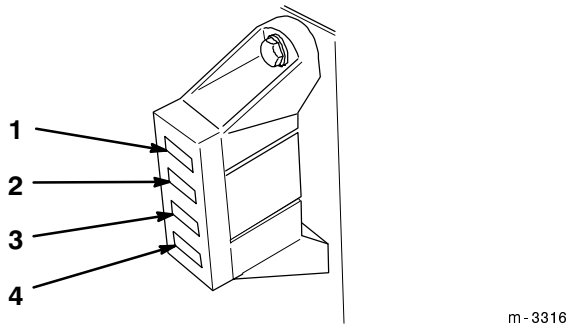

Figure 47

1. F1; main-30 amp
2. F2; regulator-25 amp
3. F3; dash, interlock-10 amp
4. F4; headlights-10 amp

Headlights

Specification: Bulb # 1156 Automotive Type

Removing the Bulb

1. Disengage the power take off (PTO), set the parking brake, lower the attachment lift, and turn the ignition key to “STOP” to stop the engine. Remove the ignition key.

2. Open the hood. Pull the wire connectors off both bulb holder terminals.

3. Rotate the bulb holder 1/4 turn counterclockwise and remove it from the reflector (Fig. 48).

4. Push and rotate the bulb counterclockwise until it stops (approx. 1/4 turn) and remove the bulb from the bulb holder (Fig. 49).

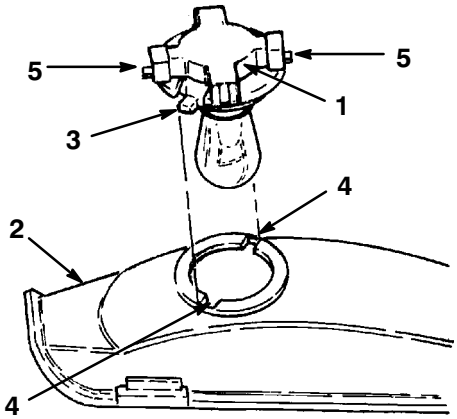

Figure 48

1. Bulb holder
2. Reflector
3. Tabs
4. Slots
5. Terminals

Installing the Bulb

1. The bulb has metal pins on the side of its base. Align the pins with the slots in the bulb holder and insert the base into the holder (Fig. 49). Push and rotate the bulb clockwise until it stops.

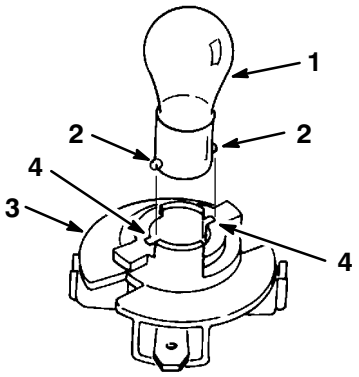

Figure 49

1. Bulb
2. Metal pins
3. Bulb holder
4. Slots

2. The bulb holder has two tabs (Fig. 48). Align the tabs with the slots in the reflector, insert the bulb holder into the reflector and rotate it 1/4 turn clockwise until it stops.

3. Push the wire connectors onto the terminals on the bulb holder.

Battery

Service Interval/Specification

Check the electrolyte level in the battery every 25 hours. Always keep the battery clean and fully charged. Use a paper towel to clean the battery case. If the battery terminals are corroded, clean them with a solution of four parts water and one part baking soda. Apply a light coating of grease to the battery terminals to prevent corrosion.

Battery size: 12 v, 380 Cold Cranking Amps

Checking the Electrolyte Level

1. Park the machine on a level surface. Disengage the power take off (PTO), set the parking brake, lower the attachment lift, and turn the ignition key to “STOP” to stop the engine. Remove the ignition key.

2. Remove the front grill by pulling it outward toward you.

3. Remove the battery shield.

4. Open the cell covers to see into the cells. The electrolyte must be up to the lower part of the tube (Fig. 50). Do not allow the electrolyte to get below the plates.

5. If the electrolyte is low, add the required amount of distilled water; refer to Adding Water to the Battery.

6. If the fluid level is correct, press the cell covers onto the battery and replace the battery shield.

   IMPORTANT: Keep the battery shield in place to protect the battery from heat.

7. Replace the grill.

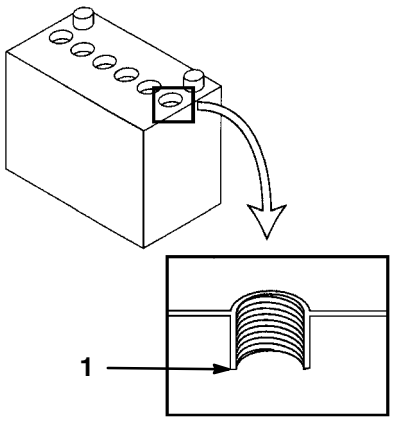

Figure 50

1. Lower part of the battery cell tube

Adding Water to the Battery

IMPORTANT: Use only distilled water.

The best time to add distilled water to the battery is just before you operate the machine. This lets the water mix thoroughly with the electrolyte solution.

1. Clean the top of the battery with a paper towel.
2. Lift off the filler caps (Fig. 50).
3. Slowly pour distilled water into each battery cell until the level is up to the lower part of the tube (Fig. 50).

   IMPORTANT: Do not overfill the battery because electrolyte (sulfuric acid) can cause severe corrosion and damage to the chassis.
4. Press the cell covers onto the battery.
5. Replace the battery shield.

   IMPORTANT: Keep the battery shield in place to protect the battery from heat.
6. Replace the grill.

Removing the Battery

1. Disengage the power take off (PTO), set the parking brake, lower the attachment lift, and turn the ignition key to “STOP” to stop the engine. Remove the ignition key.
2. Remove the front grill by pulling it outward toward you.
3. Remove the battery shield (Fig. 51).

   IMPORTANT: Always disconnect the negative (black) cable first.
4. Disconnect the negative (black) ground cable from the battery post (Fig. 51).
5. Disconnect the positive (red) cable from the battery post (Fig. 51).
6. Remove the battery by lifting it up, then pulling it out (directly toward you) from the tractor.

   IMPORTANT: Always hold the battery vertical to avoid spilling battery acid.

⚠ WARNING

POTENTIAL HAZARD
- **Either the battery terminals or metal tools could short against metal tractor components.**
- **Incorrect battery cable routing could damage the cables.**

WHAT CAN HAPPEN
- **Sparks can cause the battery gasses to explode.**
- **Damaged cables could short against metal tractor components and cause sparks.**

HOW TO AVOID THE HAZARD
- **When removing or installing the battery, do not allow the battery terminals to touch any metal parts of the tractor (below the headlights).**
- **Always DISCONNECT the negative (black) battery cable before disconnecting the positive (red) cable.**
- **Always RECONNECT the positive (red) battery cable before reconnecting the negative (black) cable .**
- **Do not allow metal tools to short between the battery terminals and metal parts of the tractor.**
- **Always keep the battery shield and hold-down rods in place to protect and secure the battery.**
- **Always route battery cables as illustrated.**

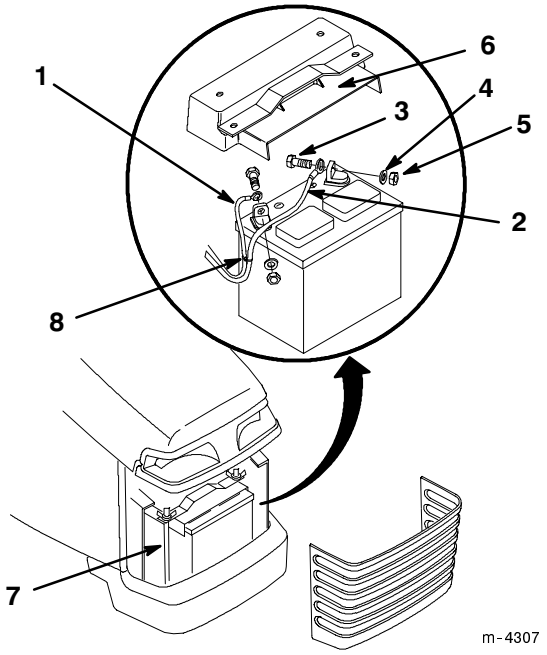

Figure 51

1.	Negative cable (black)	5.	Locknut (2)
2.	Positive cable (red)	6.	Battery shield
3.	Bolt (2)	7.	Hold–down rod
4.	Washer (2)	8.	Wire tie

Installing the Battery

1. Place the battery onto the chassis (Fig. 51).

   IMPORTANT: Always connect the positive (red) cable first.

2. Using the bolt, washer and locknut, connect the positive (red) cable to the positive (+) battery post (Fig. 51).

3. Using the bolt, washer and locknut, connect the negative (black) cable to the negative (-) battery post (Fig. 51).

4. Replace the battery shield and secure to the chassis with the hold-down rods and wing nuts.

   IMPORTANT: Keep the battery shield in place to protect the battery from heat.

5. Replace the grill.

Charging the Battery

IMPORTANT: Always keep the battery fully charged (1.260 specific gravity). This is especially important to prevent battery damage when the temperature is below 32°F (0°C).

1. Remove the battery from the chassis; refer to Removing the Battery, page 40.

2. Check the electrolyte level; refer to Checking the Electrolyte Level, page 39, steps 2-5.

3. Remove the cell covers from the battery and connect a 3- to 4-amp battery charger to the battery posts. Charge the battery at a rate of 4 amperes or less for 4 hours (12 volts). Do not overcharge the battery. Install the cell covers after the battery is fully charged.

⚠ WARNING

POTENTIAL HAZARD
- **Charging the battery produces gasses.**

WHAT CAN HAPPEN
- **Battery gasses can explode.**

HOW TO AVOID THE HAZARD
- **Keep cigarettes, sparks and flames away from battery.**

4. Install the battery in the chassis; refer to Installing the Battery, page 41.

Cleaning and Storage

1. Disengage the power take off (PTO), set the parking brake, and turn the ignition key to “STOP” to stop the engine. Remove both the ignition and “Key Choice” keys.

2. Remove grass clippings, dirt, and grime from the external parts of the entire machine, especially the engine. Clean dirt and chaff from the outside of the engine’s cylinder head fins and blower housing; refer to Check for Debris, page 12.

IMPORTANT: You can wash the machine with mild detergent and water. DO NOT PRESSURE WASH THE MACHINE. Pressure washing may damage the electrical system or wash away necessary grease at friction points. Avoid excessive use of water, especially near the control panel, lights, engine, and the battery.

3. Check the brake; refer to Brake, page 32.

4. Service the air cleaner; refer to Air Cleaner, page 25.

5. Grease the chassis; refer to Greasing and Lubrication, page 30.

6. Change the crankcase oil; refer to Engine Oil, page 27.

7. Check the tire pressure; refer to Tire Pressure, page 31.

8. For storage over 30 days, prepare the traction unit as follows.

   A. Add a petroleum based stabilizer/conditioner to fuel in the tank. Follow mixing instructions from stabilizer manufacturer. (1 oz. per gallon). **Do not use an alcohol based stabilizer (ethanol or methanol).**

   Note: A fuel stabilizer/conditioner is most effective when mixed with fresh gasoline and used at all times.

   B. Run the engine to distribute conditioned fuel through the fuel system (5 minutes).

   C. Stop the engine, allow it to cool and drain the fuel tank; refer to Draining Fuel Tank, page 33.

   D. Restart the engine and run it until it stops.

   E. Choke the engine.

   F. Start and run the engine until it will not start again.

   G. Dispose of fuel properly. Recycle as per local codes.

   IMPORTANT: Do not store stabilizer/conditioned gasoline over 90 days.

9. Remove the spark plug(s) and check its condition; refer to Spark Plug, page 29. With the spark plug(s) removed from the engine, pour two tablespoons of engine oil into the spark plug hole. Now use the electric starter to crank the engine and distribute the oil inside the cylinder. Install the spark plug(s) and tighten to recommended torque; refer to Spark Plugs, page 29. Do not install the wire on the spark plug(s).

10. Remove the battery from the chassis, check the electrolyte level, and charge it fully; refer to Battery, page 39. Do not connect the battery cables to the battery posts during storage.

    IMPORTANT: The battery must be fully charged to prevent it from freezing and being damaged at temperatures below 32°F (0°C). A fully charged battery maintains its charge for about 50 days at temperatures lower than 40°F (4°C). If the temperatures will be above 40°F (4°C), check the water level in the battery and charge it every 30 days.

11. Check and tighten all bolts, nuts, and screws. Repair or replace any part that is damaged.

12. Paint all scratched or bare metal surfaces. Paint is available from your Authorized Service Dealer.

13. Store the machine in a clean, dry garage or storage area. Remove both the ignition and “Key Choice” keys and put them in a safe place place out of the reach of children. Cover the machine to protect it and keep it clean.

Wiring Diagram

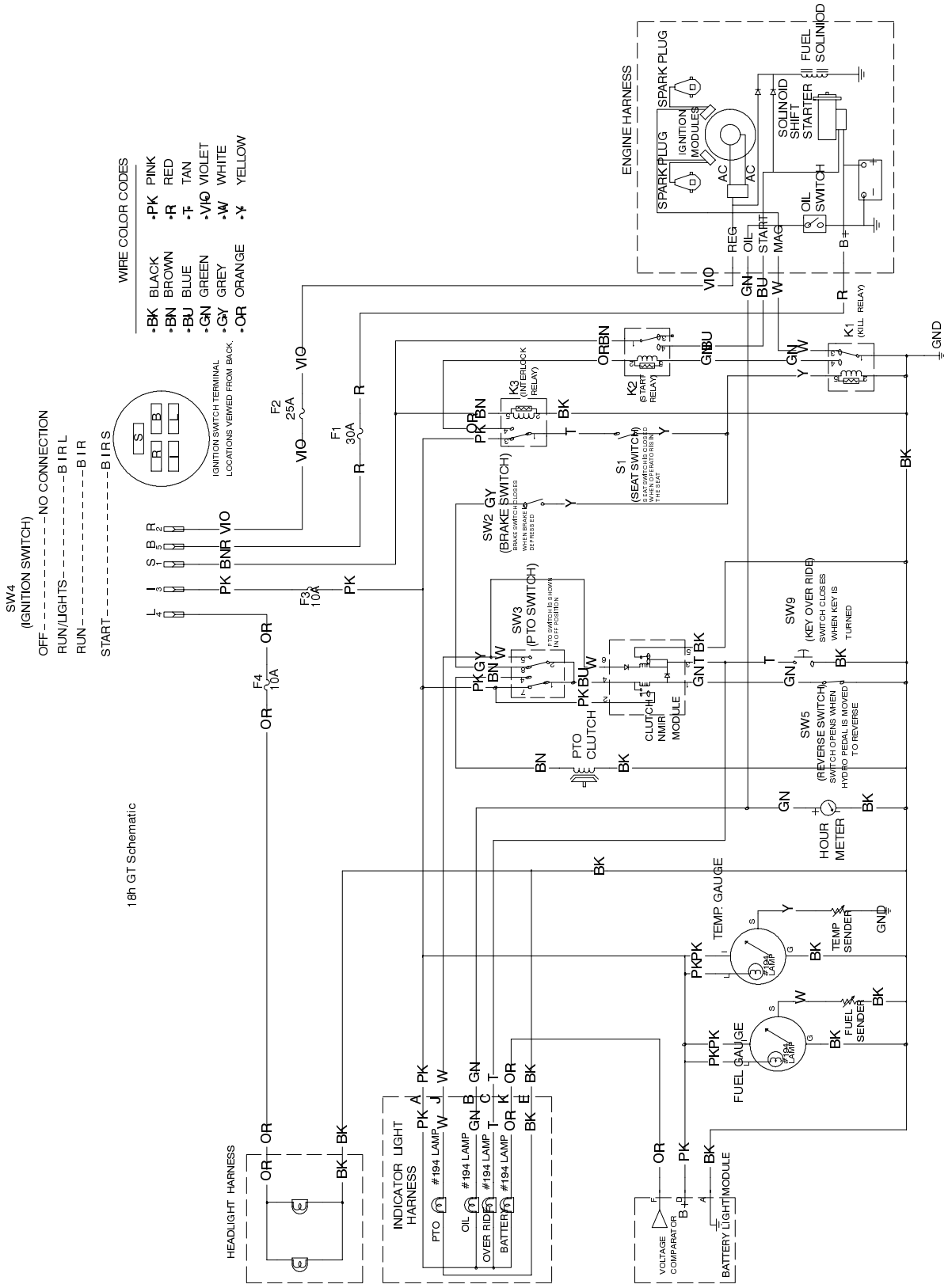

Troubleshooting

PROBLEM	POSSIBLE CAUSES	CORRECTIVE ACTION
The starter does not crank.	1. The PTO is ON.	1. Move the PTO to OFF.
	2. The brake is not depressed or the parking brake is not on.	2. Set the parking brake.
	3. The operator is not seated.	3. Sit on the seat.
	4. The electrical connections are corroded or loose.	4. Check the electrical connections for good contact.
	5. A fuse is blown or loose.	5. Correct or replace fuse.
	6. The relay or switch is defective.	6. Contact Authorized Service Dealer.
	7. The battery is discharged.	7. Charge the battery or replace it.
	8. The safety interlock system is malfunctioning.	8. Contact your Authorized Service Dealer.
	9. A faulty starter or starter solenoid.	9. Contact your Authorized Service Dealer.
	10. Seized internal engine components.	10. Contact your Authorized Service Dealer.
The engine cranks, but will not start.	1. Incorrect starting procedure.	1. Refer to Starting and Stopping the Engine, page 14.
	2. The fuel tank is empty.	2. Fill with fresh fuel.
	3. The fuel shut-off valve is closed.	3. Open the fuel shut-off valve.
	4. Dirt, water or stale fuel is in the fuel system.	4. Drain and flush the fuel system; add fresh fuel.
	5. Clogged fuel line.	5. Clean or replace.
	6. The spark plug lead is disconnected.	6. Reconnect the spark plug.
	7. The kill relay is not energized.	7. Contact your Authorized Service Dealer.
	8. A spark plug is faulty.	8. Replace the spark plug.
	9. The ignition is faulty.	9. Contact your Authorized Service Dealer.

PROBLEM	POSSIBLE CAUSES	CORRECTIVE ACTION
The engine starts, but does not keep running	1. Misadjusted or faulty choke or throttle control cable.	1. Contact your Authorized Service Dealer.
	2. The fuel tank vent is restricted.	2. Contact your Authorized Service Dealer.
	3. Dirt or water in the fuel system.	3. Drain and flush the fuel system; add fresh fuel.
	4. The fuel filter is clogged.	4. Replace the fuel filter.
	5. The fuel pump is faulty.	5. Contact your Authorized Service Dealer.
	6. The carburetor is faulty.	6. Contact your Authorized Service Dealer.
	7. Loose wires or poor connections.	7. Check and tighten wire connections.
	8. The cylinder head gasket is faulty.	8. Contact your Authorized Service Dealer.
	9. A fuse is blown or loose.	9. Correct or replace fuse.
The engine runs, but knocks or misses.	1. Dirt, water or stale fuel is in the fuel system.	1. Drain and flush the fuel system; add fresh fuel.
	2. A spark plug lead is loose.	2. Reconnect the spark plug lead.
	3. A spark plug is faulty.	3. Replace the spark plug.
	4. Loose wires or poor connections.	4. Check and tighten wire connections.
	5. Engine overheating.	5. See ENGINE OVERHEATS.
The engine will not idle.	1. The fuel tank vent is restricted.	1. Contact your Authorized Service Dealer.
	2. Dirt, water or stale fuel is in the fuel system.	2. Drain and flush the fuel system; add fresh fuel.
	3. A spark plug is faulty.	3. Replace the spark plug.
	4. Carburetor idle passages are plugged.	4. Contact your Authorized Service Dealer.
	5. The idle speed adjusting screw is incorrectly set.	5. Contact your Authorized Service Dealer.
	6. The fuel pump is faulty.	6. Contact your Authorized Service Dealer.
	7. Low compression.	7. Contact your Authorized Service Dealer.
	8. The air cleaner element is dirty.	8. Clean or replace.

PROBLEM	POSSIBLE CAUSES	CORRECTIVE ACTION
The engine overheats.	1. The crankcase oil level is incorrect.	1. Fill or drain to the full mark.
	2. The fuel mixture is lean.	2. Contact your Authorized Service Dealer.
	3. Excessive loading.	3. Reduce load; use lower ground speed.
	4. (3) air intake screens are dirty.	4. Clean with every use.
	5. The cooling fins and air passages under the engine blower housing and/or the rotating air intake screen are plugged.	5. Clean with every use.
The engine loses power.	1. The crankcase oil level is incorrect.	1. Fill or drain to the full mark.
	2. The air cleaner element is dirty.	2. Clean or replace.
	3. Dirt, water or stale fuel is in the fuel system.	3. Drain and flush the fuel system; add fresh fuel.
	4. The engine is overheated.	4. See ENGINE OVERHEATS.
	5. A spark plug is faulty.	5. Replace the spark plug.
	6. Low compression.	6. Contact your Authorized Service Dealer.
	7. The vent hole in the fuel tank vent fitting is plugged.	7. Contact your Authorized Service Dealer.
	8. The engine load is excessive.	8. Reduce ground speed.
The tractor will not operate in either direction because the engine bogs down or stalls.	1. The brake is sticking.	1. Contact your Authorized Service Dealer.
The tractor goes forward only at partial speed and is slow or does not operate in reverse.	1. The engine is running at partial speed.	1. Move the throttle to “FAST.”
	2. The linkage is out of adjustment.	2. Contact your Authorized Service Dealer.
	3. There is internal hydro wear.	3. Contact your Authorized Service Dealer.

The tractor will not operate in either direction.	1. The High-Low range lever is in “N.” 2. The transmission oil is low. 3. The transmission is faulty. 4. The control linkage needs adjustment or replacement. 5. The parking brake was not released or the parking brake is not releasing. 6. The drive shaft or wheel hub key has been damaged.	1. Move the High-Low range lever to “L” or “H.” 2. Fill to the full “F” mark on the transmission oil dipstick when the transmission is cold. 3. Contact your Authorized Service Dealer. 4. Contact your Authorized Service Dealer. 5. Release the parking brake or check the linkage. 6. Contact your Authorized Service Dealer.
The tractor operates erratically.	1. The transmission oil level is low. 2. The transmission control linkage needs adjustment or replacement. 3. The transmission is faulty.	1. Fill to the full “F” mark on the transmission oil dipstick when the transmission is cold. 2. Contact your Authorized Service Dealer. 3. Contact your Authorized Service Dealer.
The tractor operates in both directions, but with a loss of power. This condition becomes worse as the transmission becomes hot.	1. The transmission oil level is low. 2. The transmission shows signs of overheating or water contamination. 3. The cooling fan and/or transmission cooling fins are faulty or dirty. 4. The engine is not operating at full throttle	1. Fill to the full “F” mark on the transmission oil dipstick when the transmission is cold. 2. Replace the transmission oil and filter. 3. Clean the transmission and/or replace the fan (contact your Authorized Service Dealer). 4. Increase the engine speed to full throttle.

Abnormal vibration or noise.	1. The engine mounting bolts are loose. 2. The idler pulley or cutter deck blade is loose. 3. The transaxle cooling fan is loose. 4. There is a problem with the electric clutch	1. Tighten the engine mounting bolts. 2. Tighten the appropriate pulley. 3. Contact your Authorized Service Dealer. 4. Contact your Authorized Service Dealer.
PTO (cutter deck) belt comes off of pulleys, slips, or fails.	1. Belt tension is incorrect. 2. Mower level is incorrect 3. Blade slope in transport is incorrect. 4. Cutter deck belt guide is loose or incorrectly adjusted. 5. Belt is worn or damaged. 6. Pulley is damaged. 7. Engine is not at full throttle. 8. PTO is being engaged when cutter deck is in tall uncut grass or weeds. 9. Cutter deck is overloaded because mulching or bagging requires more power. 10. Cutter deck is overloaded because too much grass is being cut at a time. 11. Cutter deck is overloaded because deck is clogged with grass clippings. 12. Cutter deck is overloaded because tractor is mowing too fast for conditions.	1. See cutter deck or attachment manual. 2. See cutter deck manual. 3. See cutter deck manual. 4. Adjust and tighten belt guide. 5. See cutter deck or attachment manual. 6. Contact authorized dealer. 7. Always operate engine powered attachments at full throttle. 8. Engage PTO only in shorter or previously cut grass. 9. Reduce ground speed when mulching or bagging. 10. Cut tall grass and weeds with mower in its highest position, making a second pass cutting at height desired. 11. Clean cutter deck. 12. Reduce ground speed.

Consumer
Riding
Products

The Toro Total Coverage Guarantee

A Two-Year Full Warranty
(Limited Warranty for Commercial Use)

Conditions and Products Covered

The Toro Company and its affiliate, Toro Warranty Company, pursuant to an agreement between them, jointly promise to repair any Toro Product used for normal residential purposes* if defective in materials or workmanship. The following time periods apply from the date of purchase:

Products	Warranty Period
• All Products	2 year full warranty
• 300 and 5xi Series Tractors:	
Chassis	5 year full warranty
Front Axle	5 year full warranty
Drive Shaft (5xi Series Only)	5 year full warranty
• All Batteries	1 year full warranty

This warranty covers both the cost of parts and labor, and transportation within a fifteen mile radius of the servicing dealer.

This warranty applies to all consumer riding products and their attachments.

* Normal residential purposes means use of the product on the same lot as your home. Use at more than one location is considered commercial use, and the commercial use warranty would apply.

Limited Warranty for Commercial Use

Toro Consumer Products and attachments used for commercial, institutional, or rental use are warranted against defects in materials or workmanship for the following time periods from the date of purchase:

Products	Warranty Period
• All Products	90 day limited warranty
• 300 and 5xi Series Tractors:	
Chassis	1 year limited warranty
Liquid Cooled Gas Engines	1 year limited warranty
Air Cooled Gas and Diesel Engines	2 year limited warranty

Instructions for Obtaining Warranty Service

Should you feel your Toro Product contains a defect in materials or workmanship, contact the retailer who sold you the product or any Authorized Service Dealer or Master Service Dealer. The Yellow Pages of your telephone directory is a good reference source. The dealer will either arrange service at his/her dealership or recommend another Authorized Service Dealer who may be more convenient. You may need proof of purchase (copy of registration card, sales receipt, etc.) for warranty validation.

If for any reason you are dissatisfied with the Service Dealer's analysis of the defect in materials or workmanship or if you need a referral to a Toro Service Dealer, please feel free to contact us at:

Customer Service Department
Toro Warranty Company
8111 Lyndale Avenue South
Bloomington, MN 55420-1196
612-888-8801
800-348-2424

Owner Responsibilities

You must maintain your Toro Product by following the maintenance procedures described in the operator's manual. Such routine maintenance, whether performed by a dealer or by you, is at your expense.

Items and Conditions Not Covered

There is no other express warranty except for special emission system coverage on some products. This express warranty does not cover:

- Cost of regular maintenance service or parts, such as filters, fuel, lubricants, tune-up parts, blade sharpening, brake and clutch adjustments.
- Any product or part which has been altered or misused or required replacement or repair due to normal wear, accidents, or lack of proper maintenance.
- Repairs necessary due to improper fuel, contaminants in the fuel system, or failure to properly prepare the fuel system prior to any period of non-use over three months.
- Pickup and delivery charges for distances beyond a fifteen mile radius from an Authorized Toro Service Dealer.

All repairs covered by this warranty must be performed by an Authorized Toro Service Dealer using Toro approved replacement parts.

General Conditions

Repair by an Authorized Toro Service Dealer is your sole remedy under this warranty.

Neither The Toro Company nor Toro Warranty Company is liable for indirect, incidental or consequential damages in connection with the use of the Toro Products covered by this warranty, including any cost or expense of providing substitute equipment or service during reasonable periods of malfunction or non-use pending completion of repairs under this warranty. Some states do not allow exclusions of incidental or consequential damages, or limitations on how long an implied warranty lasts, so the above exclusions and limitations may not apply to you.

This warranty gives you specific legal rights, and you may also have other rights which vary from state to state.

Countries Other than the United States or Canada

Customers who have purchased Toro products exported from the United States or Canada should contact their Toro Distributor (Dealer) to obtain guarantee policies for your country, province, or state. If for any reason you are dissatisfied with your Distributor's service or have difficulty obtaining guarantee information, contact the Toro importer. If all other remedies fail, you may contact us at Toro Warranty Company.

Rev. 12/06/1999