Form No. 3424-648 Rev D

TORO®

Count on it.

Parts Catalog

Z Master® Professional 7500-D Series Riding Mower

With 96in TURBO FORCE® Rear Discharge Mower

Model No. 74096—Serial No. 403247447 and Up

Register at www.Toro.com.
Original Instructions (EN)

3424-648 D

Ordering Replacement Parts

To order replacement parts, please supply the part number, the quantity, and the description of each part desired.

Understanding Reference Numbers

Each identified part in an illustration has a reference number. The reference number for a part also appears in the parts list, along with other information about the part.

This catalog uses two special reference number formats, one to indicate parts in a service assembly and another to indicate the quantity of a given part in an illustration.

Service Assembly Reference Numbers

Parts in service assemblies have reference numbers in the form a:b. The a represents the reference number of the entire service assembly and the b represents a sequential number unique to each part within the service assembly.

For example, a wheel assembly might be identified by reference number 6, the tire by 6:1, the valve by 6:2, and the wheel by 6:3. When you order the assembly identified by reference number 6, you receive all parts identified by reference numbers 6:1,6:2, and 6:3. However, you may also order any part individually. Reference numbers of this type appear in illustration and in parts lists.

Reference Numbers Indicating Quantity

In an illustration, if a reference number indicates more than one part, the reference number has the form nX y. The n represents the quantity of the part, the X is the multiplication symbol, and the y represents the reference number.

For example, in an illustration, the reference number 2X 37 means that two of the parts identified by reference number 37 are indicated.

Contents

Power Frame Assembly . . . 6
Main Frame and Roll-Over Protection System Assembly . . . 8
Roll-Over Protection System Assembly No. 135-5786 . . . 10
Hydraulic Drive Assembly . . . 12
Hydraulic Assembly . . . 14
Hydraulic Reservoir Assembly No. 126-6764 . . . 16
Rear Wheel and Caster Wheel Assembly . . . 18
Caster Wheel Assembly . . . 20
Parking Brake Assembly . . . 22
Fuel System Assembly . . . 24
RH Fuel Tank Assembly No. 126-8651 . . . 26
LH Fuel Tank Assembly No. 126-8652 . . . 28
Seat Mount Assembly . . . 30
Seat Assembly No. 125-3107 . . . 32
Motion Control Assembly . . . 34
Rod Linkage Assembly . . . 36
Electrical Assembly . . . 38
Wire Harness Assembly No. 126-7352 . . . 40
Deck Lift Assembly . . . 42
Hydraulic Lift and Fold Assembly . . . 44
Engine and Air Cleaner Assembly . . . 46
Air Cleaner Assembly No. 126-7646 . . . 48
Hood and Tank Cover Assembly . . . 50
Hood Assembly . . . 52
Transmission Assembly . . . 54
Charge Pump Housing Assembly Transmission Assembly No. 131-5510 . . . 56
Center Section Assembly Transmission Assembly No. 131-5510 . . . 58
Gear Case and Clutch Assembly Transmission Assembly No. 131-5510 . . . 60
Hydraulic Gear Pump Assembly No. 112-9542 . . . 62
Cooling Assembly . . . 64
Cooling Assembly No. 121-3330 . . . 66
Center Deck Assembly . . . 68
Driveshaft Assembly No. 110-3575 . . . 70
Idler Arm Assembly No. 126-2585 . . . 72
Gear Box and Mount Assembly No. 126-2951 . . . 74
Gearbox Assembly No. 130-8659 . . . 76
Idler Assembly No. 126-9435 . . . 78
Idler Assembly No. 126-9438 . . . 80
Folding Deck Hydraulic Assembly . . . 82
Center Deck Guard Assembly . . . 84
Center Deck Spindle, Blade and Baffle Assembly . . . 86
Spindle Assembly No. 127-0560 . . . 88
RH Wing Deck Assembly . . . 90
Caster Fork and Wheel Assembly . . . 92
LH Wing Deck Assembly . . . 94
Rear Caster Wheel Assembly . . . 96
Discharge Tunnel Assembly . . . 98
Cylinder Block Assembly . . . 100
Gear Housing Assembly . . . 102
Flywheel Housing and Oil Sump Assembly . . . 104
Cylinder Head and Cover Assembly . . . 106
Suction Manifold Assembly . . . 108
Exhaust Manifold Assembly . . . 110
Diesel Particulate Filter Assembly . . . 112

© 2020—The Toro® Company

8111 Lyndale Avenue South
Bloomington, MN 55420

Contact us at www.Toro.com.
Printed in the USA.

All Rights Reserved

Contents (continued)

Camshaft and Driving Gear Assembly 114
Crankshaft and Piston Assembly 116
Oil Pump Assembly 118
Cooling Water System Assembly 120
Fuel Supply Pump Assembly 122
Fuel Injection Valve Assembly 124
Fuel Line Assembly 126
Starting Motor Assembly 128
Generator Assembly 130
Electronic Control Unit Assembly 132
Electric Parts Assembly 134
Fuel Pump Assembly 136
Gasket Set 138
Attachments and Accessories 140

Power Frame Assembly

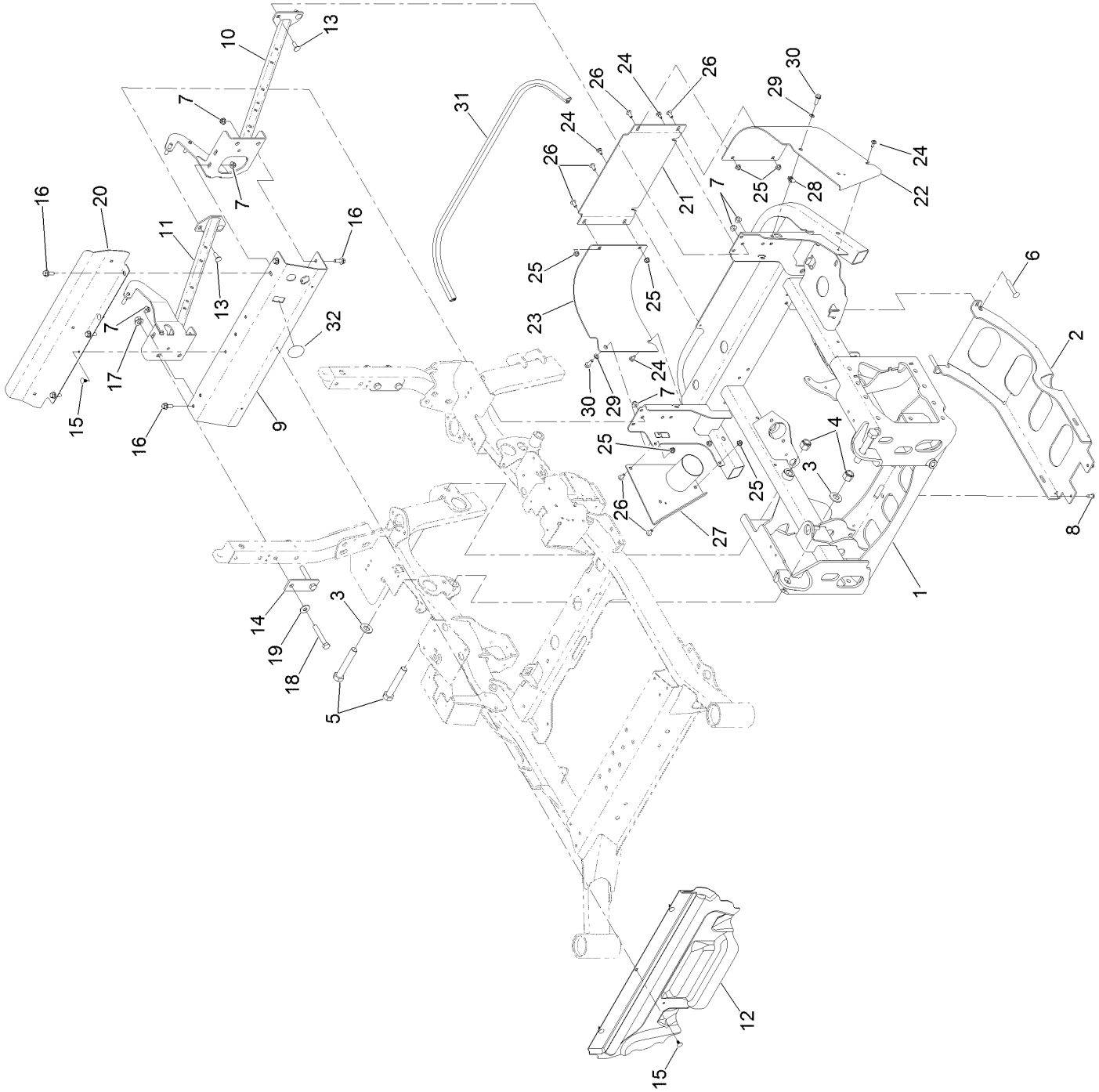

Power Frame Assembly (continued)

Ref.	Part Number	Qty.	Description
1	126-5929-03	1	Frame-Power
2	126-5922-03	1	Plate-Skid
3	103-2802	4	Washer
4	3296-51	4	Nut-Lock, NI
5	328-8	4	Screw-HH
6	3231-44	2	Screw-CARR
7	104-8301	13	Nut-HF, NI
8	613381	2	Screw-BHTF
9	126-8567-03	1	Channel-Cross
10	126-8563-03	1	Brace-ROPS, LH
11	126-8565-03	1	Brace-ROPS, RH
12	126-7458	1	Panel-Deflector, Heat
13	3231-22	4	Screw-CARR
14	135-0412-03	2	Plate-Spacer
15	117-2382	5	Plug-Plastic
16	131-2220	7	Screw-HHF
17	99-5107	4	Nut-Lock
18	112-7264	4	Screw-HH
19	109-9505	4	Washer-Spring
20	126-6557-03	1	Shield-Air
21	126-8954-03	1	Plate-Bumper, Center
22	126-8952-03	1	Plate-Bumper, LH
23	126-8953-03	1	Plate-Bumper, RH
24	120-7950	4	Screw-Torx
25	104-8300	7	Nut-HF, NI
26	126-6268	7	Screw-Torx
27	135-0880	1	Plate-Exhaust
28	112-3306	2	Nut
29	3290-475	2	Washer-Belleville
30	3234-29	2	Screw-HHF
31	126-6845	1	Seal-Bulb
32	135-3728	1	Decal-Cover

Main Frame and Roll-Over Protection System Assembly

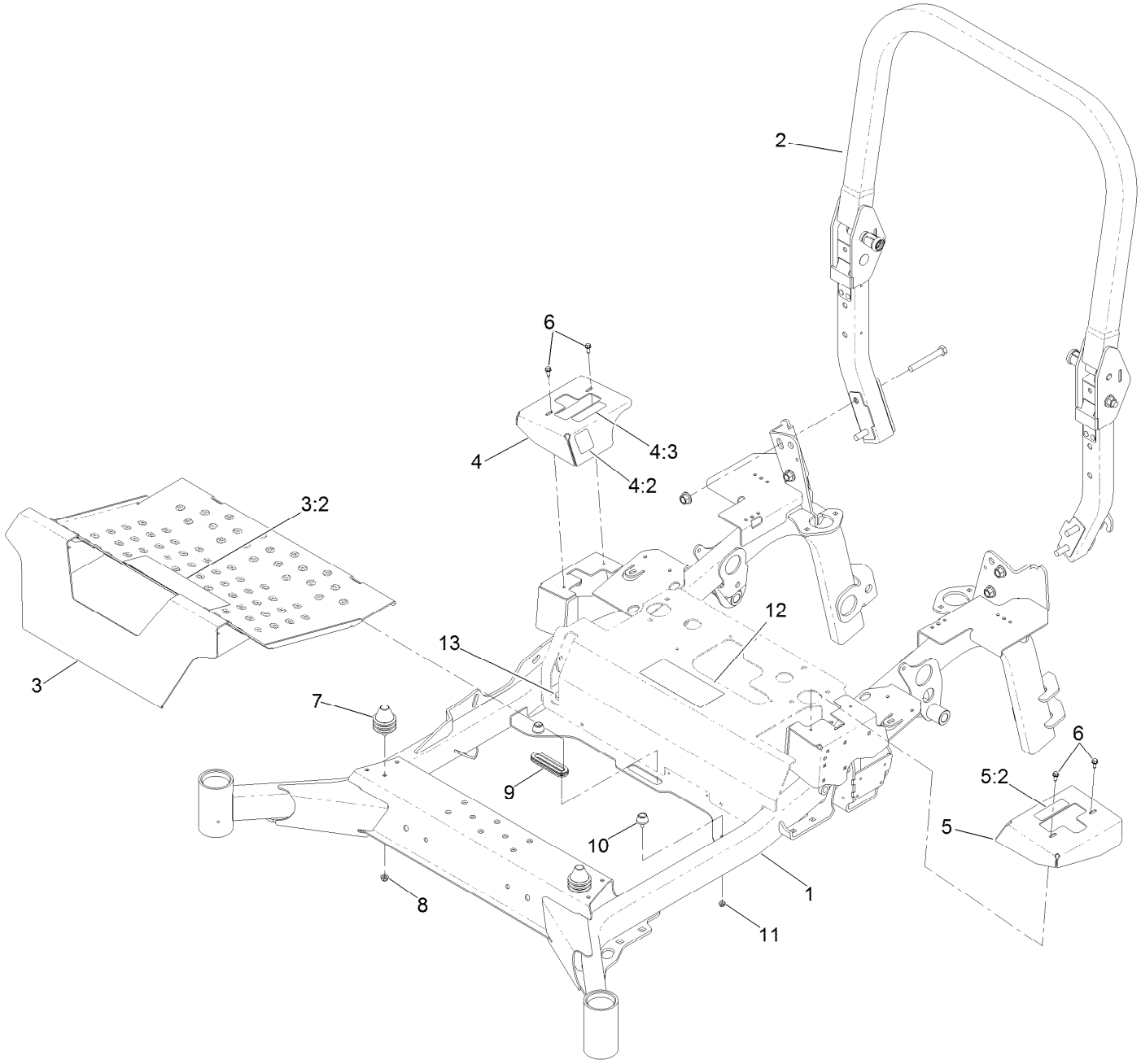

Main Frame and Roll-Over Protection System Assembly (continued)

Ref.	Part Number	Qty.	Description
1	126-7749-01	1	Frame-Main
2	135-5786	1	ROPS ASM
3	126-1821	1	Cover-Motion Control, LH
3:2	126-8383	1	Decal-Danger
4	126-1831	1	Cover-Motion Control, RH
4:2	99-8936	1	Decal-Control, Motion
4:3	116-5988	1	Decal-Park Brake, CE
5	126-1821	1	Cover-Motion Control, LH
5:2	99-8936	1	Decal-Control, Motion
6	32144-10	4	Screw-HWH
7	126-5491	2	Isolator
8	104-8300	2	Nut-HF, NI
9	126-7065	1	Grommet-Rubber
10	109-2365	2	Bumper-Rubber
11	104-7201	2	Nut-HF
12	126-9947	1	Decal-Service Aid
13	109-9233	1	Bumper-Push-In, Rubber

Roll-Over Protection System
Assembly No. 135-5786

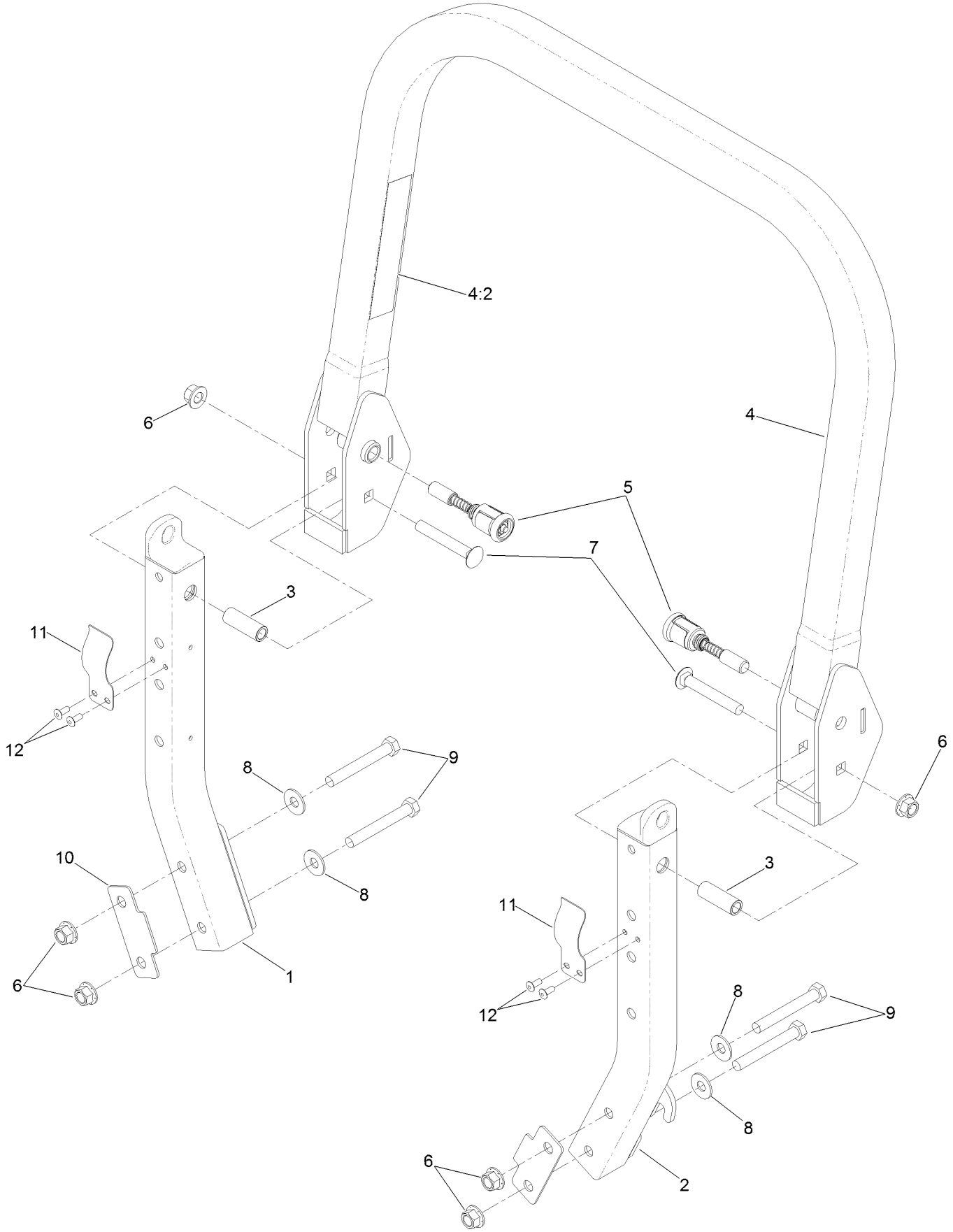

Roll-Over Protection System
Assembly No. 135-5786 (continued)

Ref.	Part Number	Qty.	Description
1		1	Lower-ROPS, RH ●
2		1	Lower-ROPS, LH ●
3	109-6653	2	Spacer
4	126-7085	1	ROPS Upper ASM
4:2	107-3069	1	Decal-Warning
5	116-0104	2	Pin-Spring
6	99-5107	6	Nut-Lock
7	3233-10	2	Screw-CARR
8	109-9505	4	Washer-Spring
9	325-35	4	Screw-HH
10	116-0960	2	Spacer
11	110-5696	2	Spring-Leaf
12	3290-412	4	Rivet-Blind

● Not serviced separately

Hydraulic Drive Assembly

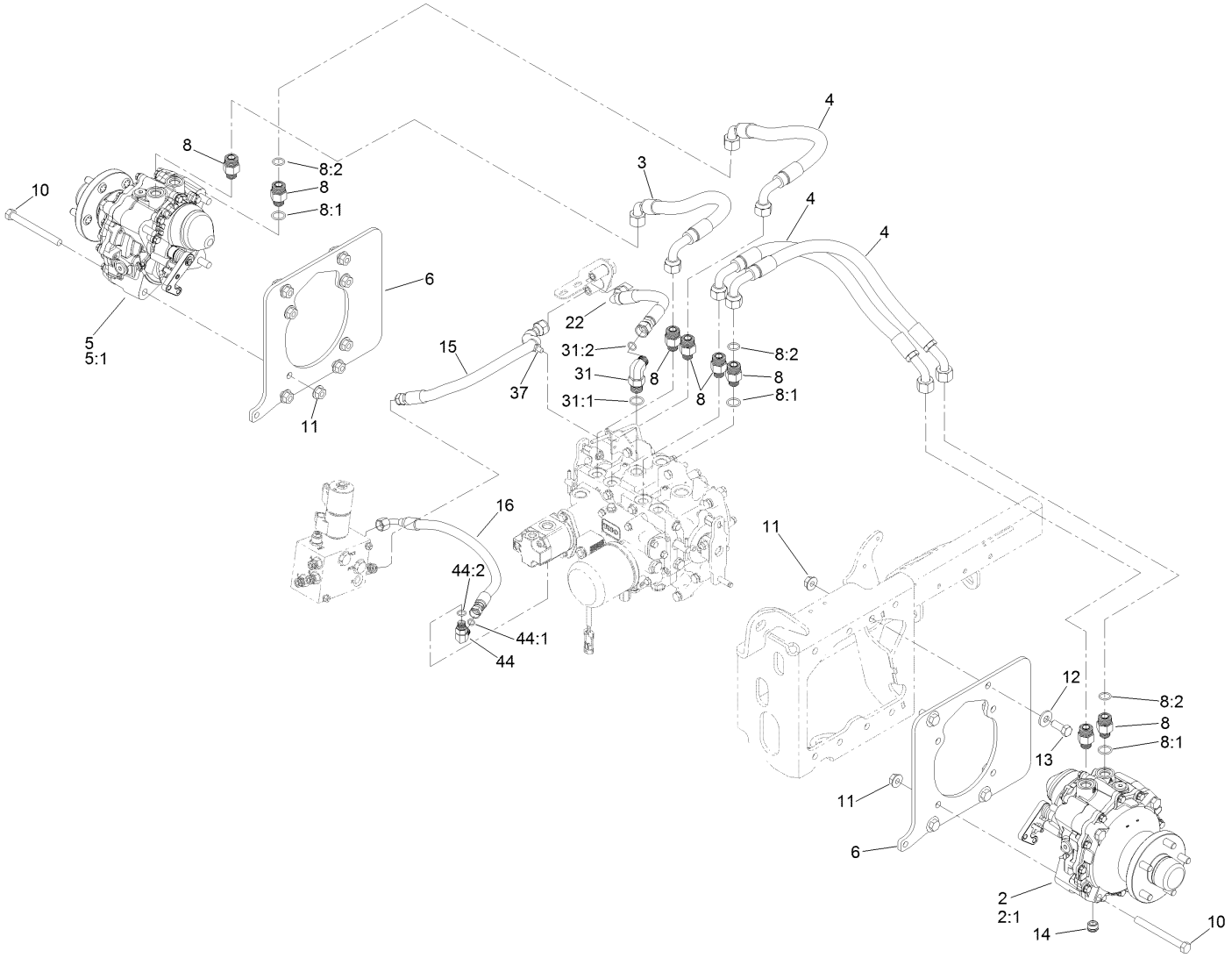

Hydraulic Drive Assembly (continued)

Ref.	Part Number	Qty.	Description
2	126-8134	1	Motor-HYD, LH
2:1	135-5333	1	5 Stud Wheel Hub Kit
3	126-8686	1	Hose ASM
4	126-8687	3	Hose ASM
5	126-8133	1	Motor-HYD, RH
5:1	135-5333	1	5 Stud Wheel Hub Kit
6	135-1202-03	2	Plate-Motor
8	340-155	8	Fitting-Straight
8:1	237-79	1	O-Ring
8:2	237-151	1	O-Ring
10	325-19	8	Screw-HH
11	32128-49	16	Nut-HHF
12	1-513435	8	Washer-Spring

Ref.	Part Number	Qty.	Description
13	325-5	8	Screw-HH
14	126-8282	2	Plug-Magnetic
15	126-8685	1	Hose ASM
16	126-8684	1	Hose ASM
22	126-8682	1	Hose ASM
31	340-105	1	Fitting-Elbow, 90 DEG
31:1	237-80	1	O-Ring
31:2	237-30	1	O-Ring
37	32180-030	1	Clip-Tie
44	340-77	1	Fitting-Elbow, 90 DEG
44:1	237-22	1	O-Ring
44:2	237-42	1	O-Ring

Hydraulic Assembly

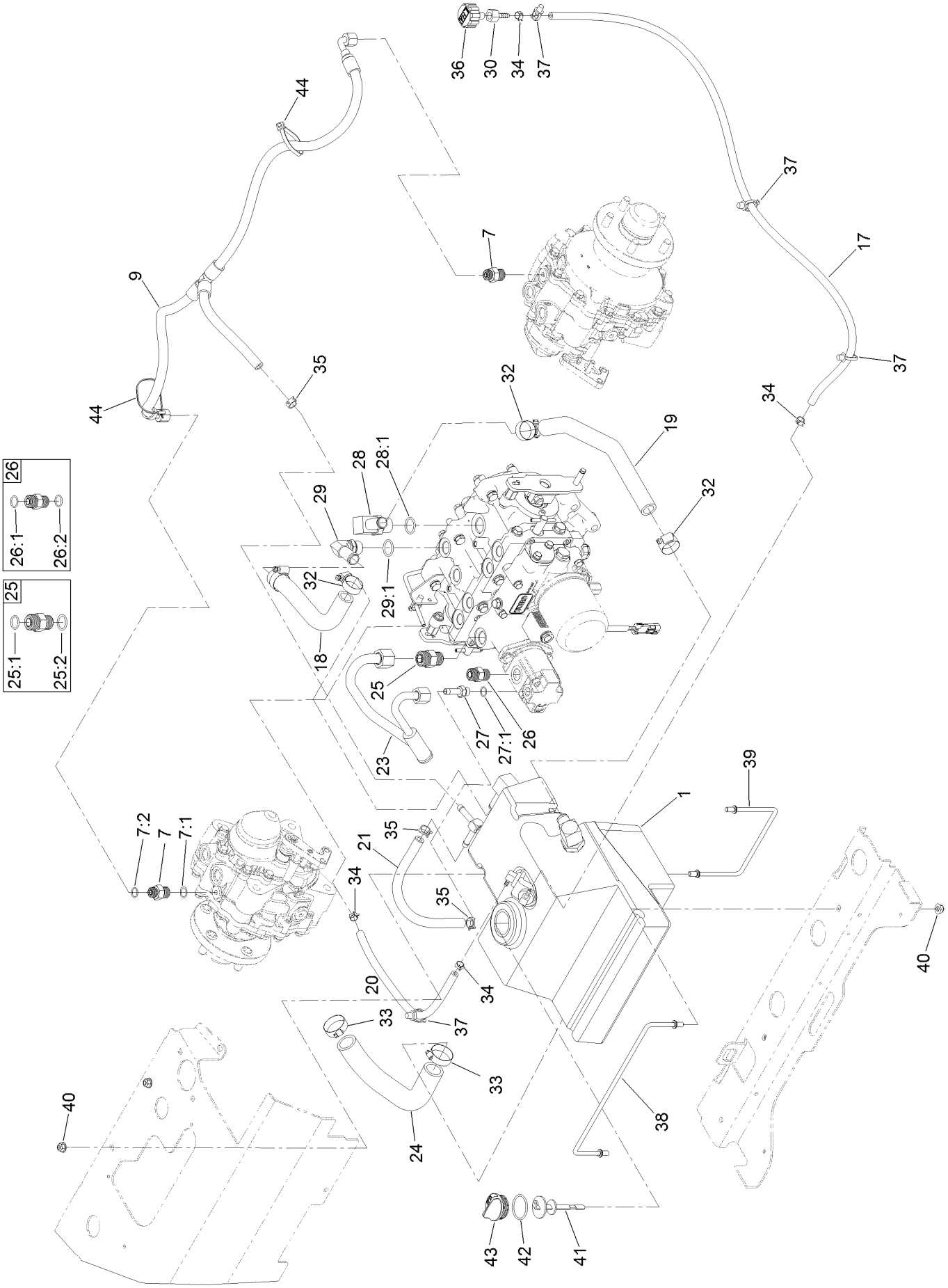

Hydraulic Assembly (continued)

Ref.	Part Number	Qty.	Description
1	126-6764	1	HYD Reservoir ASM
7	340-3	2	Fitting-Straight
7:1	237-22	1	O-Ring
7:2	237-79	1	O-Ring
9	135-3731	1	Tee Hose ASM
17	126-6776	1	Hose
18	126-6767	1	Hose-Return
19	126-6768	1	Hose-Return
20	126-6778	1	Hose
21	126-6766	1	Hose
23	126-8688	1	Tube ASM
24	126-6774	1	Hose-Suction
25	340-7	1	Fitting-Straight
25:1	237-65	1	O-Ring
25:2	237-80	1	O-Ring
26	340-4	1	Fitting-Straight
26:1	237-30	1	O-Ring
26:2	237-79	1	O-Ring
27	103-1912	1	Adapter-Straight
27:1	237-42	1	O-Ring
28	353-987	1	Fitting-Elbow, 90
28:1	237-81	1	O-Ring
29	87-8170	1	Fitting-90
29:1	237-80	1	O-Ring
30	354-95	1	Fitting-Straight
32	2412-129	4	Clamp-Hose
33	2412-34	2	Clamp-Hose
34	2412-98	4	Clamp-Hose
35	103-1988	3	Clamp-Hose
36	68-6150	1	Breather
37	32180-030	4	Clip-Tie
38	126-7547	1	Rod-Support, HYD Tank
39	126-7546	1	Rod-Support, HYD Tank
40	104-8300	4	Nut-HF, NI
41	112-6365	1	Dipstick
42	94-8166	1	O-Ring
43	93-7498	1	Plug-Plastic
44	1-303335	2	Tie-Plastic

Hydraulic Reservoir Assembly No. 126-6764

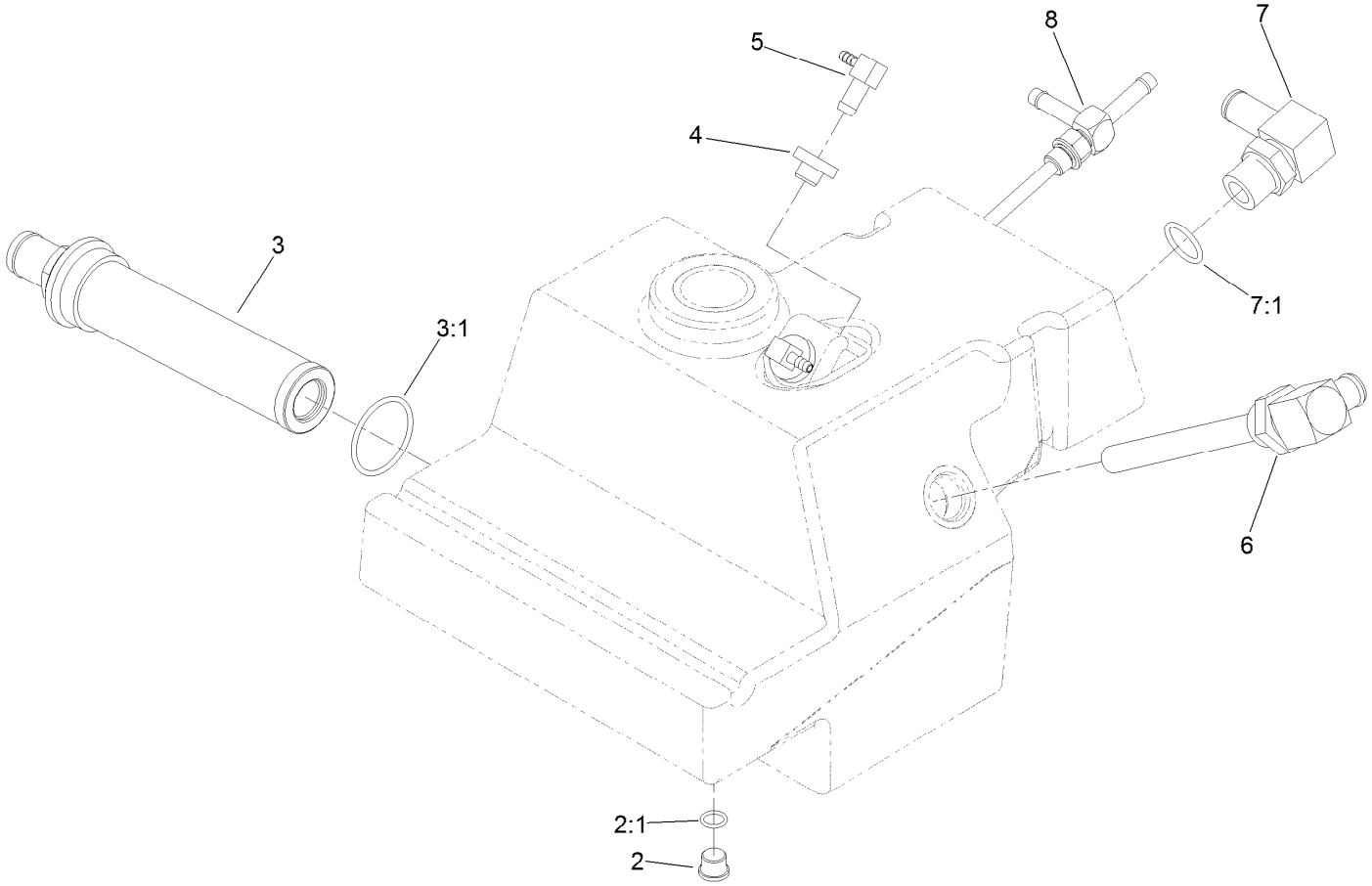

Hydraulic Reservoir Assembly No. 126-6764 (continued)

Ref.	Part Number	Qty.	Description
2	353-989	1	Plug-Hex, Hollow
2:1	237-42	1	O-Ring
3	104-7546	1	Tank Strainer ASM
3:1	340-136	1	O-Ring
4	46-6560	2	Bushing
5	104-5228	2	Fitting-Elbow, 90 DEG
6	126-6782	1	Fitting-Standpipe
7	353-987	1	Fitting-Elbow, 90
7:1	237-81	1	O-Ring
8	135-3740	1	Fitting-Tee, Drop Tube

Rear Wheel and Caster Wheel Assembly

Rear Wheel and Caster Wheel Assembly (continued)

Ref.	Part Number	Qty.	Description
1	126-7736	2	Tire ASM
1:1	126-8032	1	Rim
1:2	126-8033	1	Tire
1:3	232-27	1	Stem-Valve

Ref.	Part Number	Qty.	Description
2	242-50	10	Nut-Lug
3		2	Caster Wheel ASM ●
4	135-0328	2	Decal-Torque, Wheel Nut

● Not serviced separately

Caster Wheel Assembly

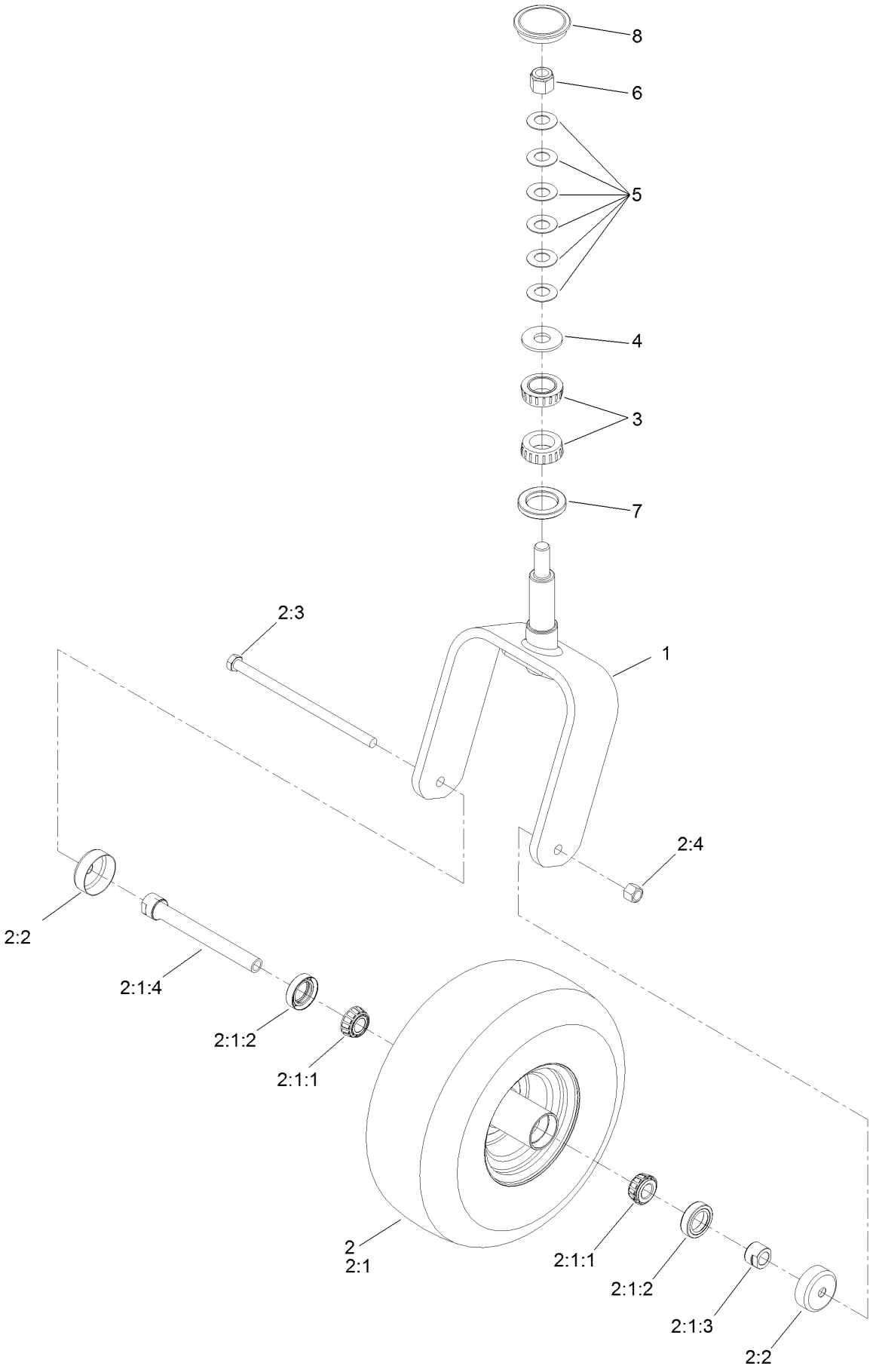

Caster Wheel Assembly (continued)

Ref.	Part Number	Qty.	Description
1	126-8601-01	1	Fork-Caster
2	126-9344	1	Wheel And Tire ASM
2:1		1	Tire And Wheel ASM ●
2:1:1	1-633585	2	Bearing-Cone, Taper
2:1:2	103-0063	2	Seal-Caster
2:1:3	103-3051	1	Spacer-Nut
2:1:4	126-5361	1	Axle Caster ASM
2:2	103-2768	2	Guard-Seal
2:3	325-39	1	Screw-HH
2:4	3296-23	1	Nut-Lock, NI
3	103-9028	2	Bearing-Roller, Cone Taper
4	3256-8	1	Washer-Flat
5	1-633508	6	Washer-Bellville
6	3296-51	1	Nut-Lock, NI
7	135-0355	1	Seal-Grease
8	126-9369	1	Cap-Grease

● Not serviced separately

Parking Brake Assembly

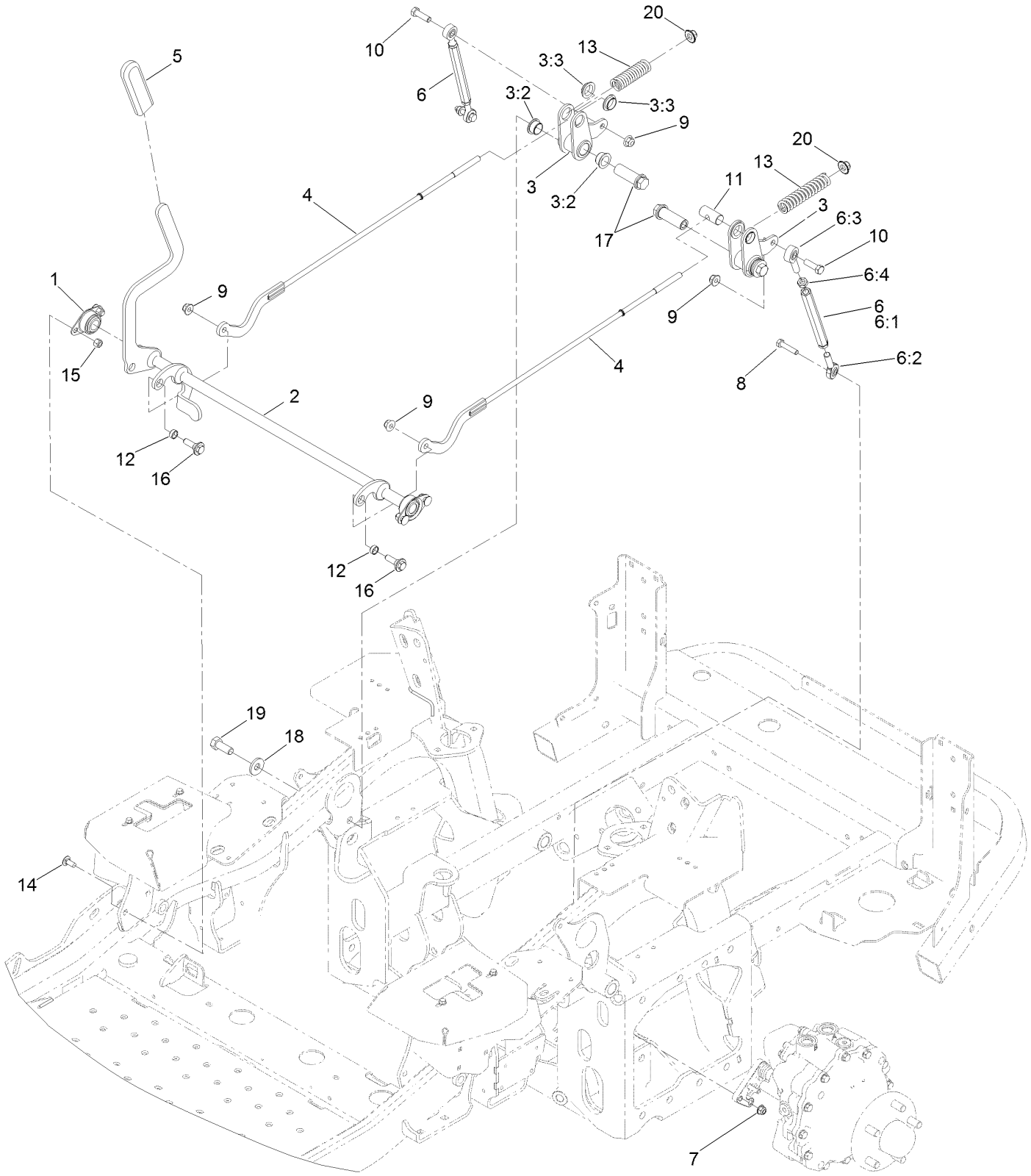

Parking Brake Assembly (continued)

Ref.	Part Number	Qty.	Description
1	1-633102	2	Bearing-Flange, Side
2	126-2019	1	Shaft-Brake
3	126-3010	2	Brake Bellcrank ASM
3:2	109-8054	2	Bushing-Flange
3:3	135-2840	2	Bushing-Flange
4	126-3193	2	Link-Brake, Upper
5	1-633268	1	Grip-Lever
6	126-9171	2	Turnbuckle ASM
6:1	126-9172	1	Turnbuckle
6:2	126-9302	1	Bearing-End, LH Rod
6:3	1-613204	1	Balljoint
6:4	3220-3	1	Nut-HJ
7	104-8300	2	Nut-HF, NI
8	322-7	2	Screw-HH
9	104-8301	4	Nut-HF, NI
10	323-7	2	Screw-HH
11	1-633144	2	Pin-Trunion
12	133-5109	2	Bearing-Sleeve
13	109-2230	2	Spring-Compression
14	3230-23	4	Screw-CARR
15	3296-29	4	Nut-Lock, NI
16	614672	2	Screw-Shoulder, HWH
17	109-5891	2	Hub-Threaded
18	1-513435	2	Washer-Spring
19	325-5	2	Screw-HH
20	109-6658	2	Nut-Flange, NI

Fuel System Assembly

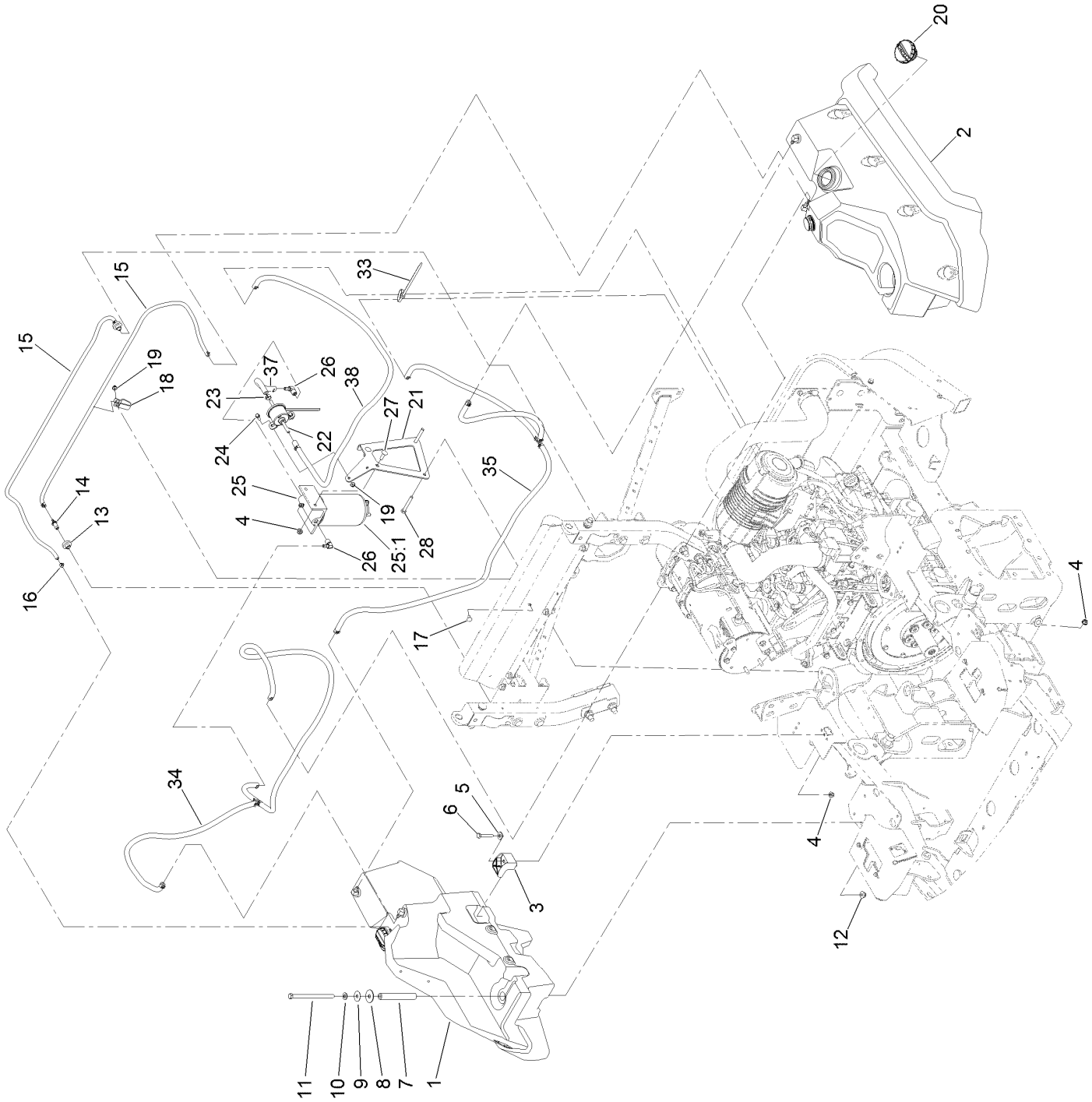

Fuel System Assembly (continued)

Ref.	Part Number	Qty.	Description
1	126-8651	1	RH Fuel Tank ASM
2	126-8652	1	LH Fuel Tank ASM
3	107-4543	4	Clamp
4	104-8300	8	Nut-HF, NI
5	3256-3	4	Washer-Flat
6	322-21	4	Screw-HH
7	126-8335	2	Tube-Spacer
8	95-1905	2	Washer-Rubber
9	105-6814	2	Washer-Plain
10	3256-24	2	Washer-Flat
11	323-22	2	Screw-HH
12	104-8301	2	Nut-HF, NI
13	46-6560	2	Bushing
14	116-4630	2	Fitting-Orifice, Straight
15	117-6395	2	Hose-Vent, Tank
16	2412-80	4	Clamp-Hose
17	3229-11	3	Screw-CARR
18	92-5753	3	Clamp-Hose
19	104-7201	5	Nut-HF
20	135-2715	2	Cap-Fuel, Diesel
21	126-8795-03	1	Bracket-Filter, Fuel
22	121-5613	1	Pump-Fuel, Electric
23	92-2379	4	Clamp-Hose
24	32105-15	2	Screw-HWH
25	126-7874	1	Fuel/Water Seperator ASM
25:1	125-2915	1	Filter-Fuel/Water Separator
26	353-781	2	Fitting-HYD, 90
27	3230-22	2	Screw-CARR
28	322-11	2	Screw-HH
33	1-303335	1	Tie-Plastic
34	135-0512	1	Fuel Suction Line ASM
35	135-0513	1	Fuel Return Line ASM
37	108-3280	1	Hose-Fuel
38	110-7503	1	Hose-Fuel

RH Fuel Tank Assembly No. 126-8651

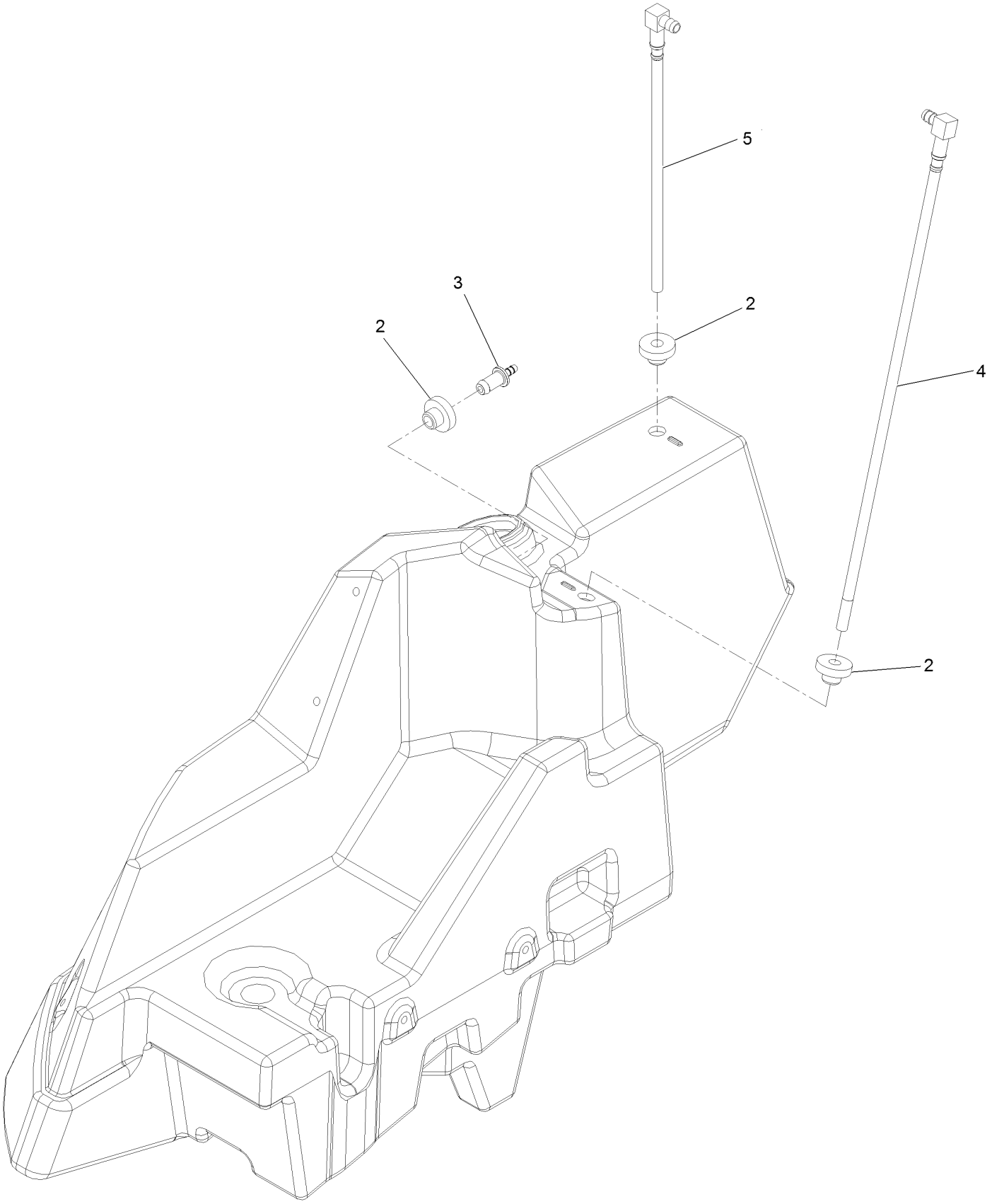

RH Fuel Tank Assembly No. 126-8651 (continued)

Ref.	Part Number	Qty.	Description
2	46-6560	3	Bushing
3	116-4630	1	Fitting-Orifice, Straight
4	126-8647	1	Pick-Up-Fuel
5	126-8649	1	Return-Fuel

LH Fuel Tank Assembly No. 126-8652

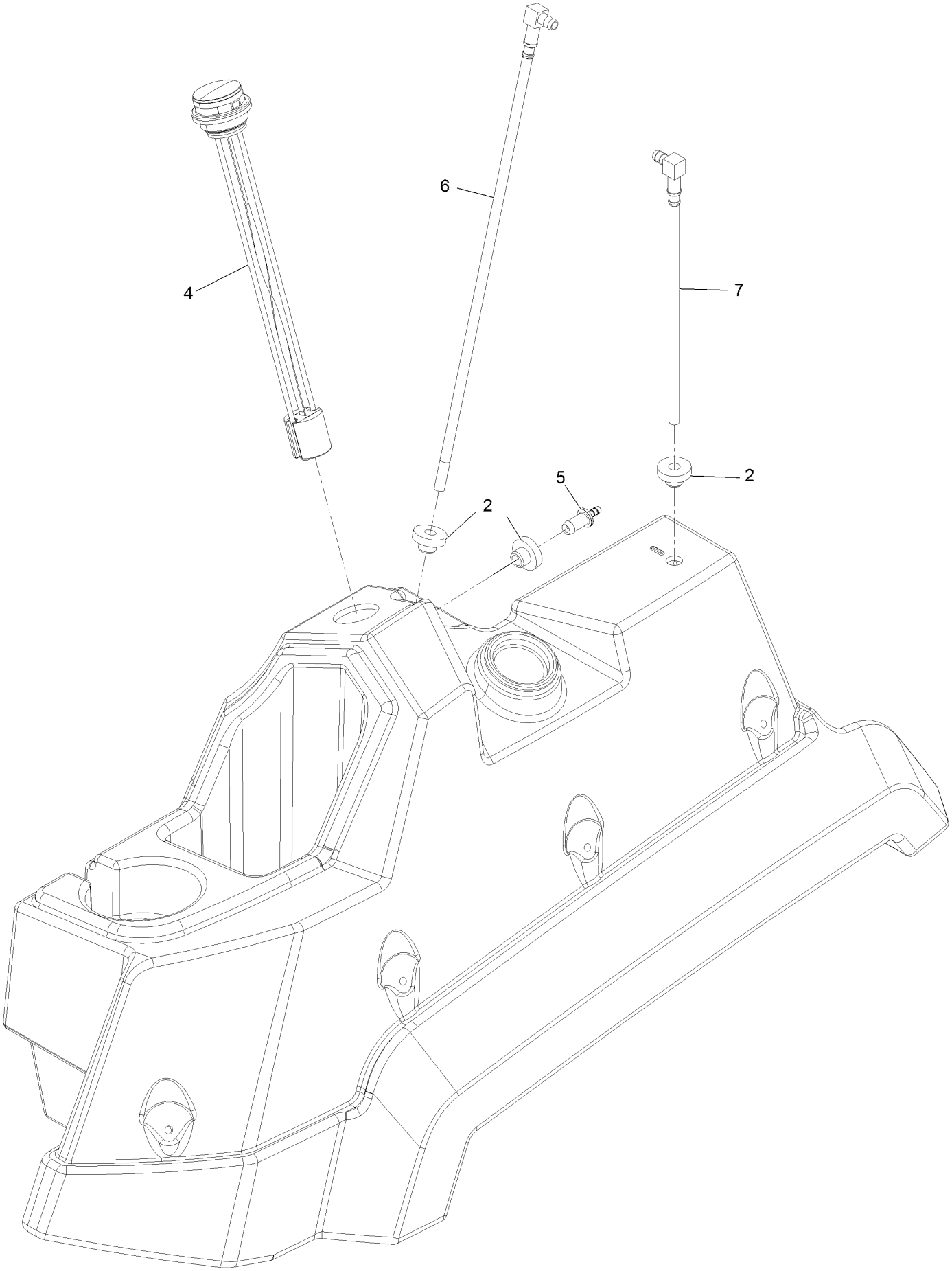

LH Fuel Tank Assembly No. 126-8652 (continued)

Ref.	Part Number	Qty.	Description
2	46-6560	3	Bushing
4	126-8660	1	Gauge-Fuel
5	116-4630	1	Fitting-Orifice, Straight
6	126-8647	1	Pick-Up-Fuel
7	126-8649	1	Return-Fuel

Seat Mount Assembly

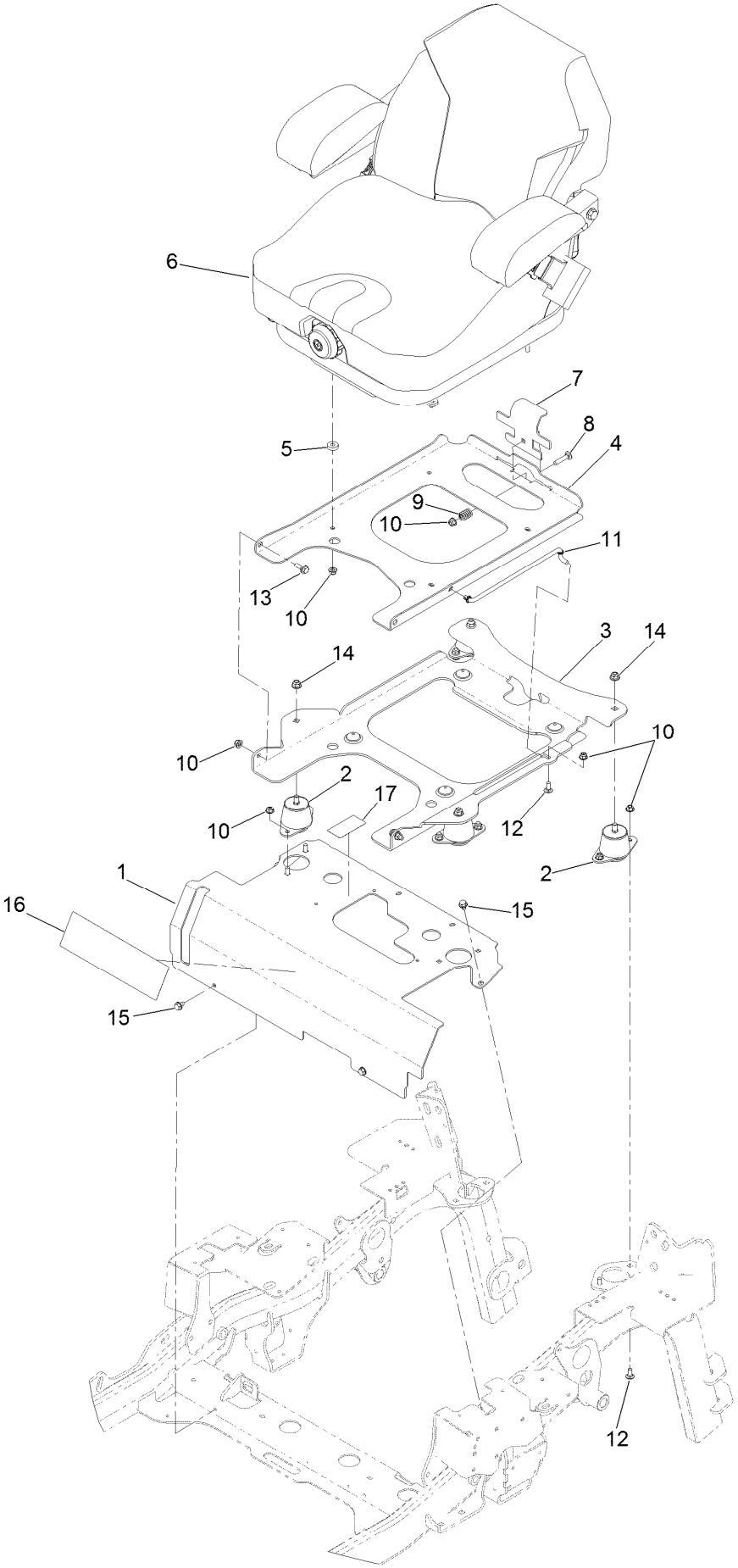

Seat Mount Assembly (continued)

Ref.	Part Number	Qty.	Description
1	126-7286	1	Seat Mount ASM
2	109-9034	4	Isolator-Seat
3	126-2701-03	1	Plate-Support, Tilt Seat
4	126-2700-03	1	Plate-Frame, Seat
5	26-4840	4	Spacer-Pin, Mounting
6	125-3107	1	Suspension Seat ASM
7	126-1855	1	Plate-Latch, Seat
8	3230-4	1	Bolt-CARR
9	107-3017	1	Spring-Compression
10	104-8300	16	Nut-HF, NI
11	116-0070	1	Rod-Prop
12	3230-23	9	Screw-CARR
13	116-1297	2	Screw-Shoulder
14	104-8301	4	Nut-HF, NI
15	9266934	4	Screw
16	136-9040	1	Decal
17	135-2837	1	Decal-Fluid, Transmission

Seat Assembly No. 125-3107

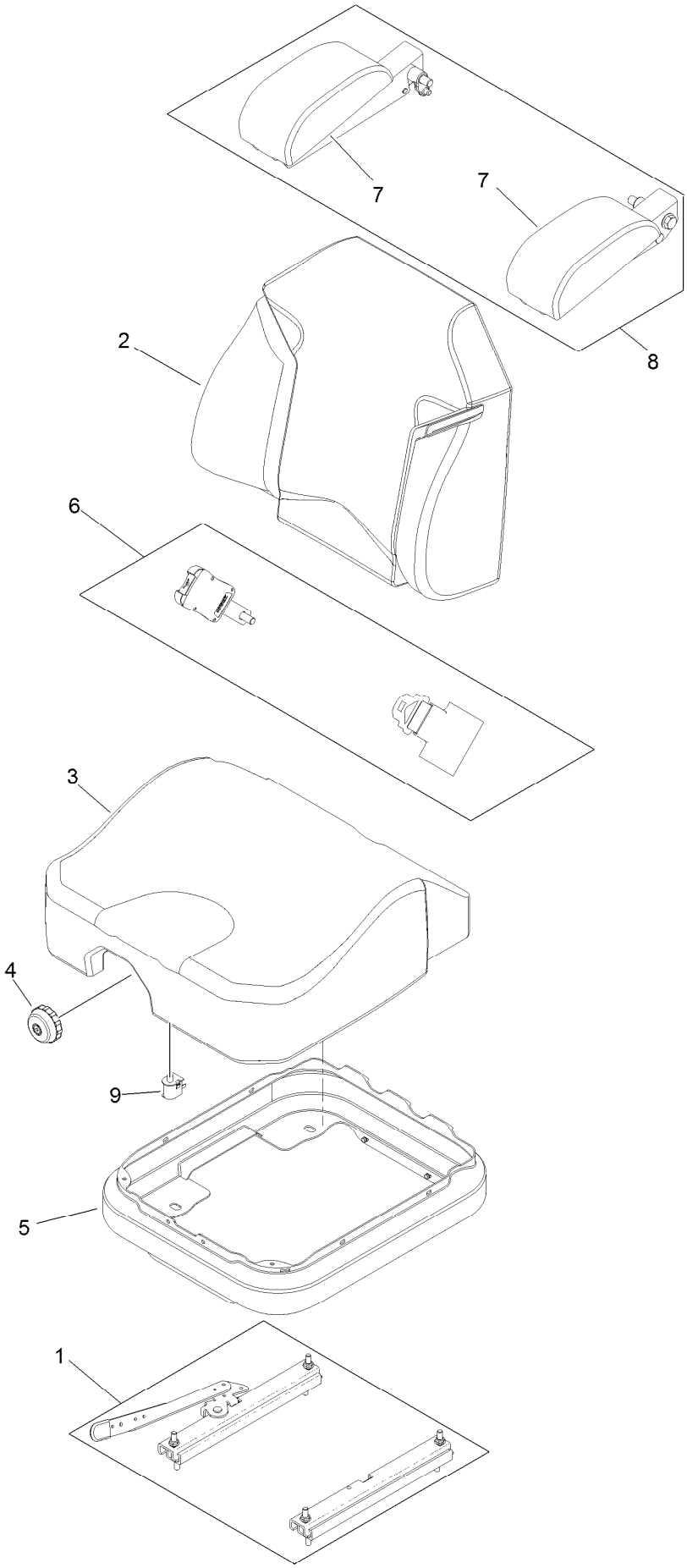

Seat Assembly No. 125-3107 (continued)

Ref.	Part Number	Qty.	Description
1	116-8910	1	Seat Track Set
2	125-3112	1	Cover-Back
3	125-3111	1	Cover-Cushion
4	116-8911	1	Knob-Adjuster
5	116-5659	1	Cover-Suspension Bellows
6	126-2061	1	Seat Belt Service Kit
7	109-9802	1	Arm Rest Pad Set
8	109-9803	1	Arm Rest Set
9	82-2190	1	Switch-Bail

Motion Control Assembly

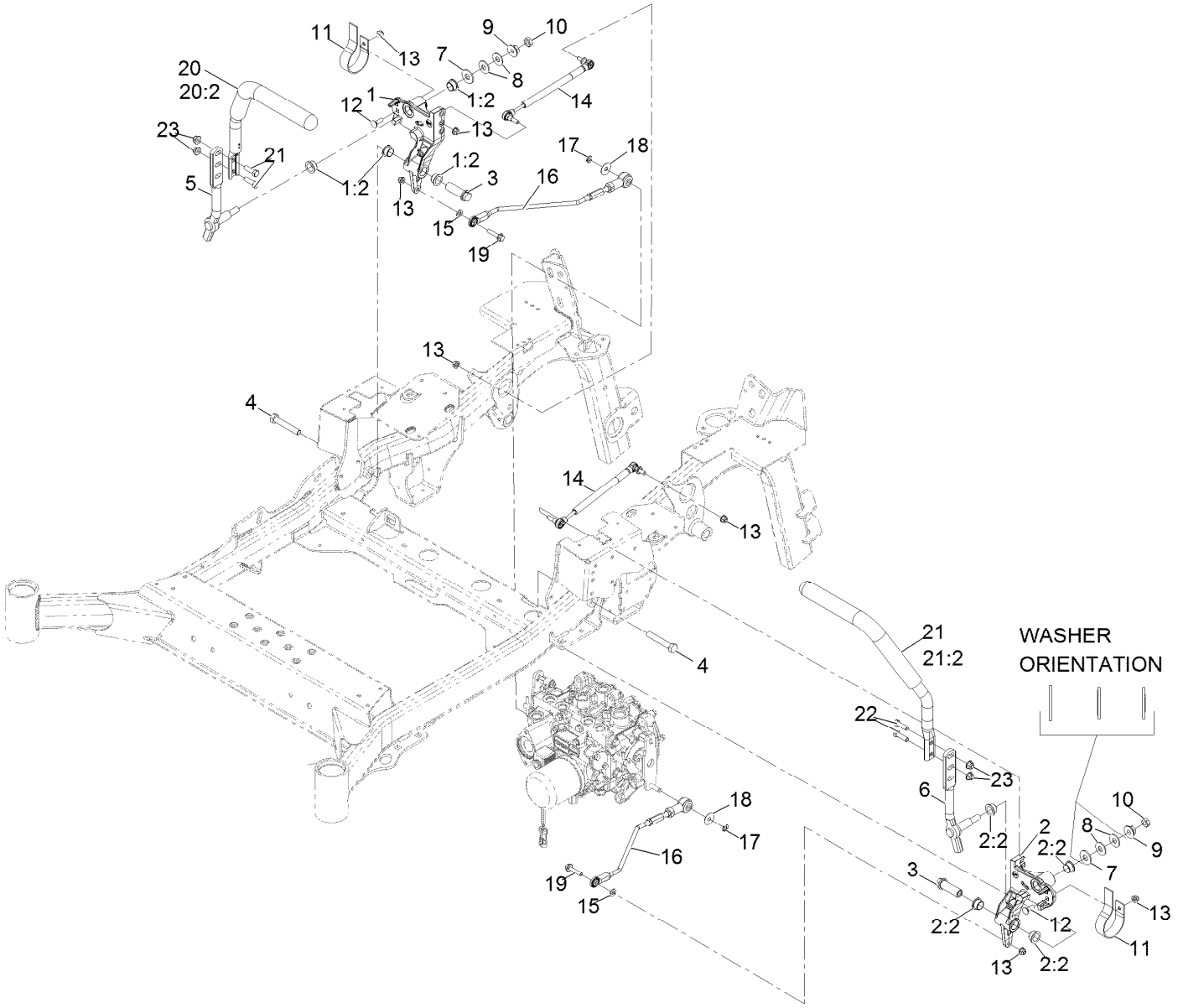

Motion Control Assembly (continued)

Ref.	Part Number	Qty.	Description
1	116-0880	1	RH Motion Control And Bushing ASM
1:2	109-8054	4	Bushing-Flange
2	116-0881	1	LH Motion Control And Bushing ASM
2:2	109-8054	4	Bushing-Flange
3	109-5891	2	Hub-Threaded
4	325-12	2	Screw-HH
5	116-0039	1	Lever-Control Motion, RH
6	116-0040	1	Lever-Control Motion, LH
7	3256-6	2	Washer-Flat
8	109-9505	4	Washer-Spring
9	32128-56	2	Nut-HF
10	3218-5	2	Nut-Jam
11	109-5575	2	Spring-Leaf
12	3230-2	2	Bolt-CARR
13	104-8300	8	Nut-HF, NI
14	116-0027	2	Damper-Control, Motion
15	3256-23	2	Washer-Plain
16	126-6131	2	Front Linkage Rod ASM
17	32151-47	2	Ring-Retaining
18	105-6814	2	Washer-Plain
19	115-1794	2	Screw-HHF
20	126-7700	1	RH Steering Handle ASM
20:2	109-5668	1	Grip-Lever, Control
21	126-7699	1	LH Steering Handle ASM
21:2	109-5668	1	Grip-Lever, Control
22	323-7	4	Screw-HH
23	104-8301	4	Nut-HF, NI

Rod Linkage Assembly

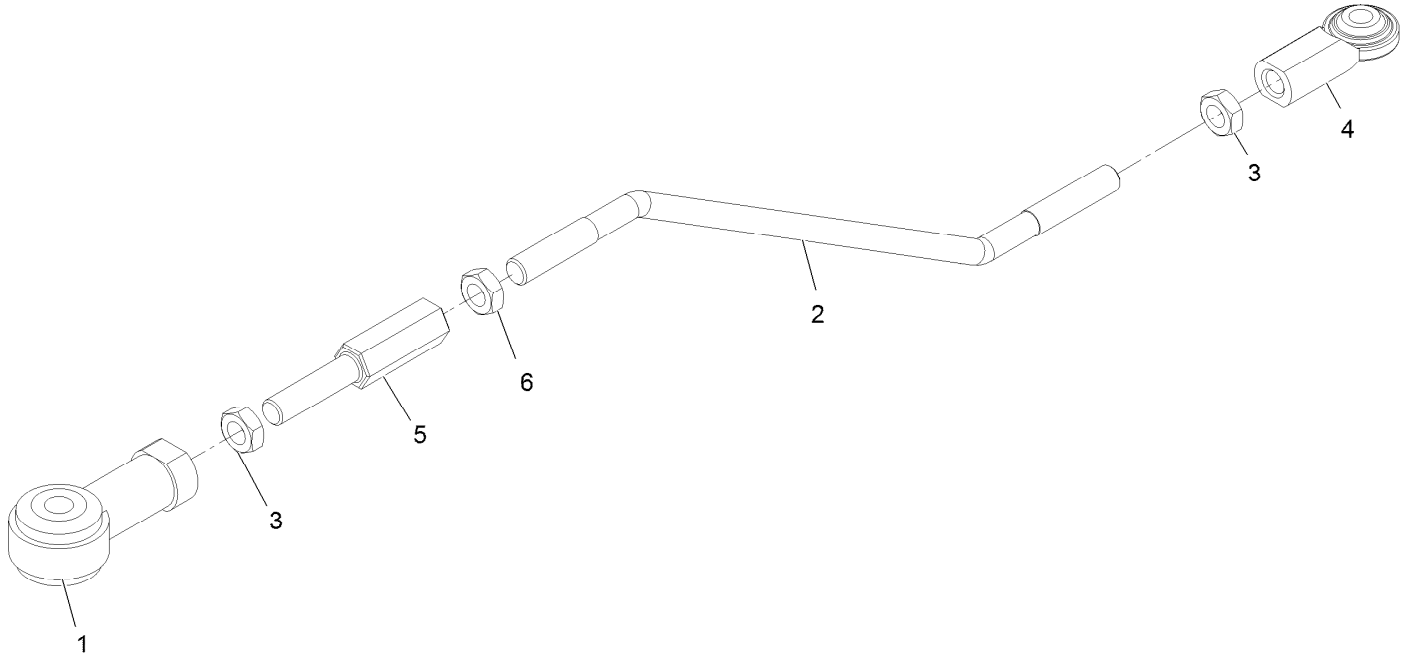

Rod Linkage Assembly (continued)

Ref.	Part Number	Qty.	Description
1	105-7199	1	End-Rod, Isolated
2	126-6469	1	Rod-Linkage, Rear
3	3220-3	2	Nut-HJ
4	103-2463	1	Joint-Ball, End
5	116-4755	1	Rod-Adjustment
6	3220-16	1	Nut-Hex Jam, LH

Electrical Assembly

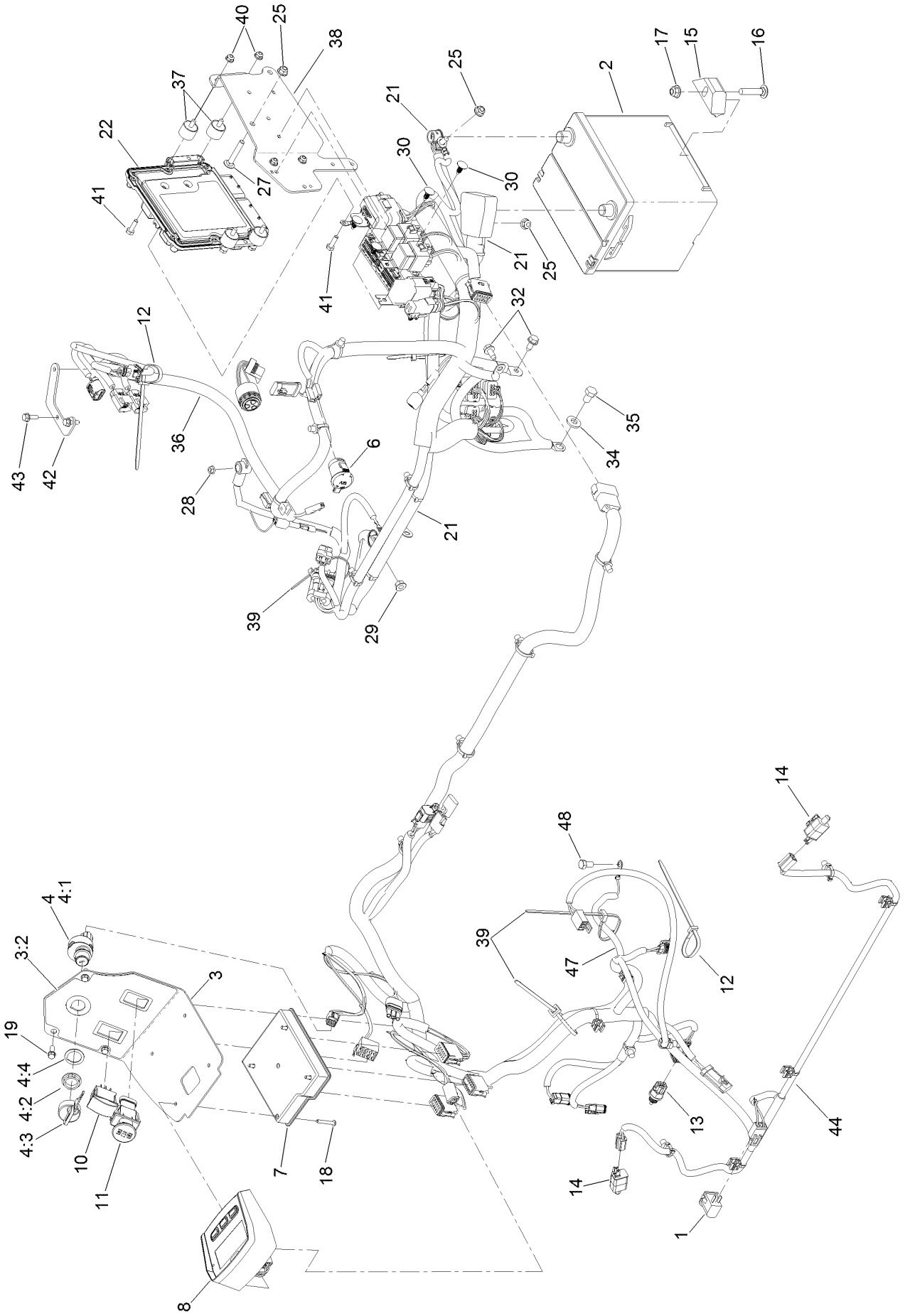

Electrical Assembly (continued)

Ref.	Part Number	Qty.	Description
1	82-2190	1	Switch-Bail
2	106-5187	1	Battery-Dry
3	135-6161	1	Console ASM
3:2	135-0398	1	Decal-Console
4	126-6285	1	Ignition Switch ASM
4:1		1	Switch-Ignition ●
4:2	108-8660	1	Nut-Mounting
4:3	106-5270	1	Ignition Key Set
4:4	108-8659	1	Washer-Backup
6	126-6499	1	Port-Power, 12V
7	135-3427	1	Module-Mcu
8	126-9976	1	Module-Horizon
10	100-1535	1	Switch-Rocker, (On)-Off-(On)
11	126-6187	1	Switch-PTO, Sealed
12	1-303335	3	Tie-Plastic
13	126-7698	1	Sensor-Temperature
14	110-6765	2	Switch
15	66-2490	1	Retainer-Battery
16	3231-5	1	Screw-CARR
17	104-8301	1	Nut-HF, NI
18	126-5092	4	Screw-PPH
19	32105-15	3	Screw-HWH
21	126-7406	1	Cable-Battery
22	127-3085	1	E C U ASM
25	104-8300	4	Nut-HF, NI
27	3230-6	2	Bolt-CARR
28	33003-00	1	Nut-HF
29	127-2371	1	Nut-HF
30	117-2382	4	Plug-Plastic
32	32144-70	2	Screw-HWHTF
34	98-5975	1	Washer-Belleville
35	33115-016	1	Screw-HH
36	126-7352	1	Harness-Wire ■
37	125-2674	4	Mount-Cylindrical
38	126-8706-03	1	Mount-Control Unit, Engine
39	3290-378	3	Tie-Cable
40	104-7201	4	Nut-HF
41	321-5	4	Screw-HH
42	135-0071	1	Bracket-Wiring, Engine
43	33103-020	2	Screw-HHF
44	126-8269	1	Harness-Wire
47	135-3998	1	Harness-Wire, Jumper ■
48	99-5132	1	Bolt

● Not serviced separately

■ Use dielectric grease on all unsealed connectors and terminals only. Do not apply in sealed connectors.

Wire Harness Assembly No. 126-7352

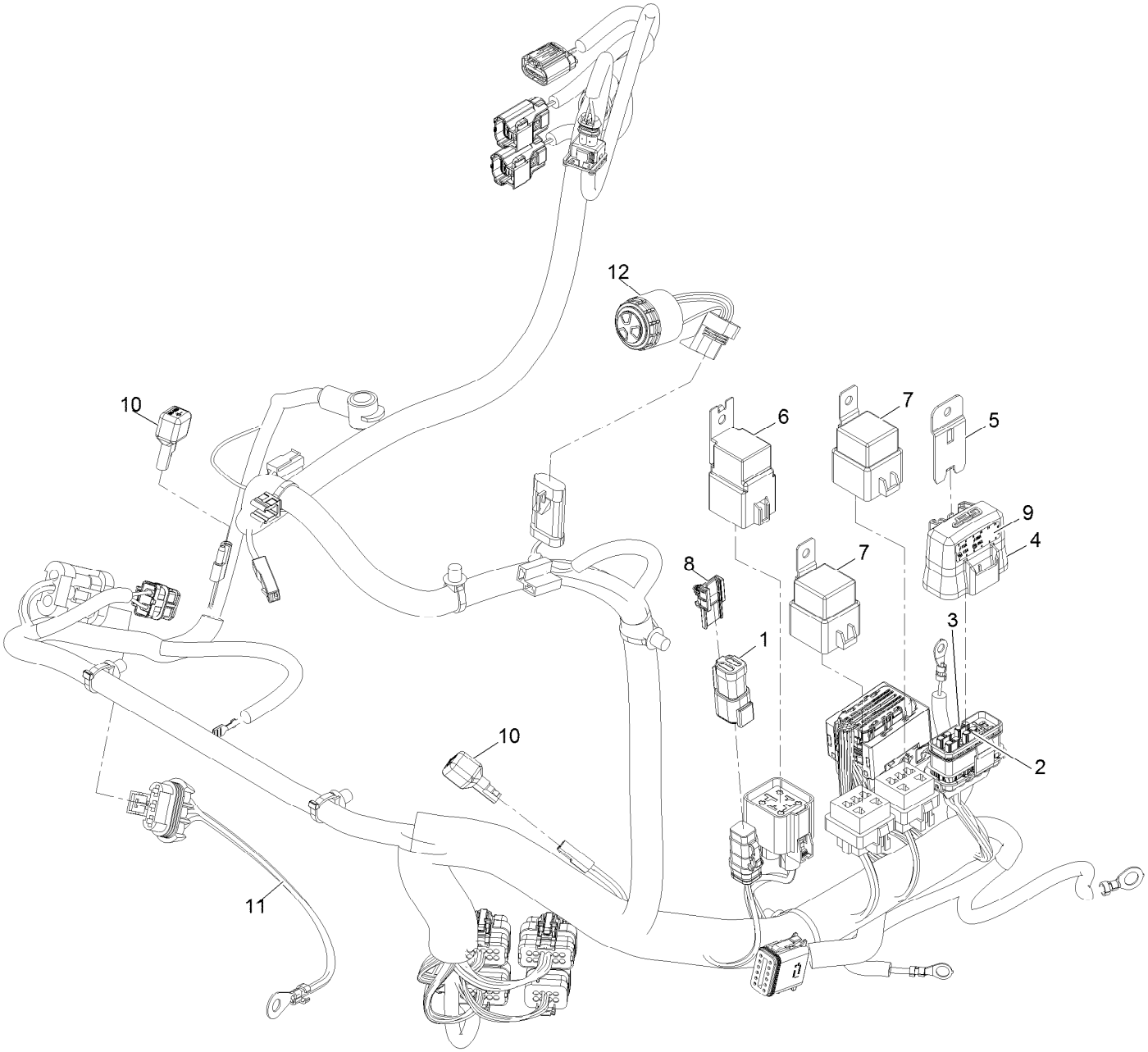

Wire Harness Assembly No. 126-7352 (continued)

Ref.	Part Number	Qty.	Description
1	32160-359	1	Connector (6M)
2	121-8867	3	Fuse-Mini Blade, 15 Amp
3	121-8869	1	Fuse-Mini Blade, 25 Amp
4	32180-176	1	Cover-Block, Fuse
5	32180-177	1	Clip-Mounting
6	127-7514	1	Relay-70A
7	99-7430	2	Relay-Mini
8	32180-103	1	Clip-Connector
9	126-9351	1	Decal-Fuse
10	100-4918	2	Diode
11	99-3441	1	Harness-Wire, Fusible Link
12	126-6286	1	Alarm-Dual Tone

Deck Lift Assembly

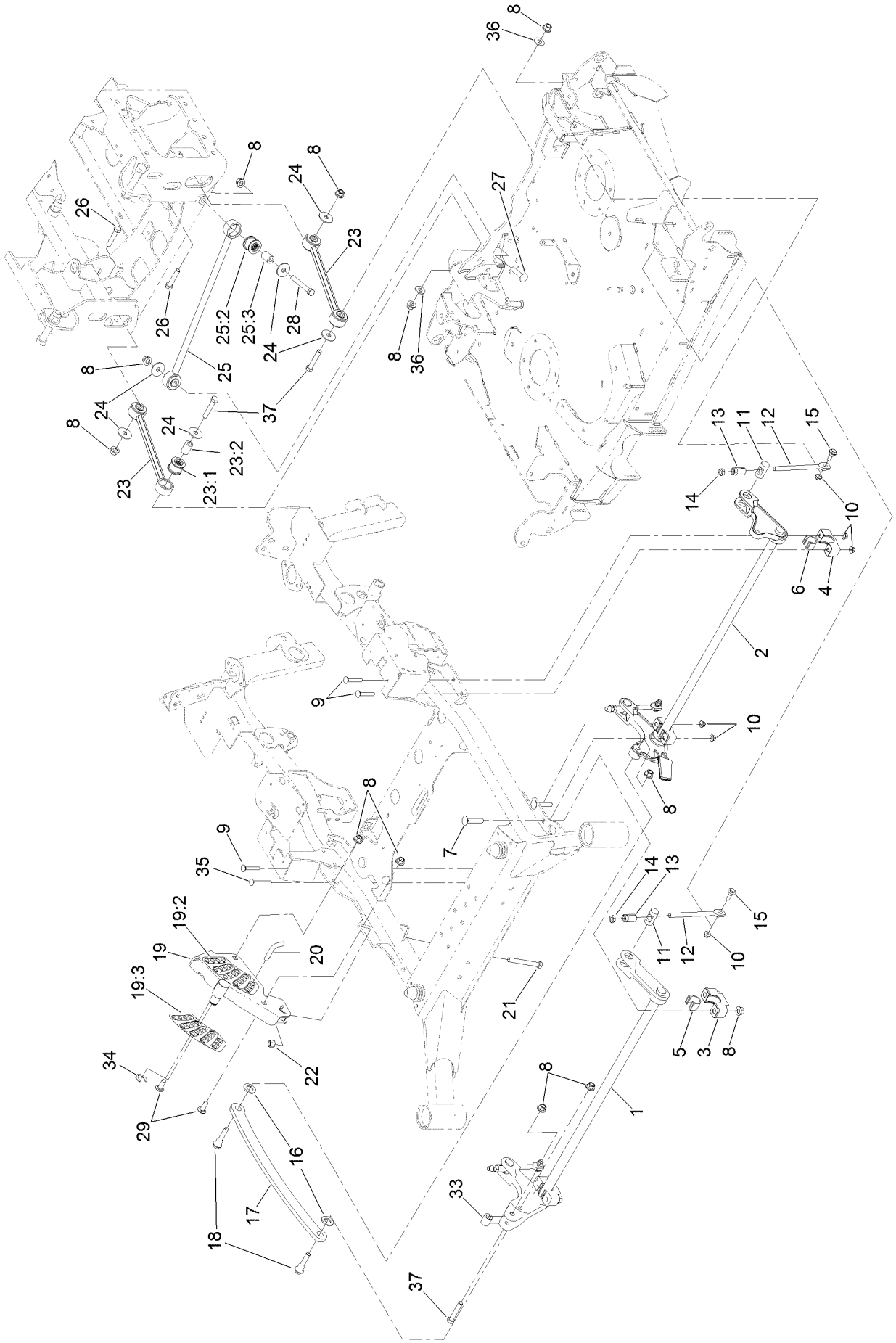

Deck Lift Assembly (continued)

Ref.	Part Number	Qty.	Description
1	135-1216-03	1	Lift-Deck, Front
2	116-2645-03	1	Lift-Deck, Rear
3	109-9409	2	Support-Bearing, Cross Shaft (Front)
4	127-0553	2	Support-Bearing, Cross Shaft (Rear)
5	109-9410	2	Bearing-Cross Shaft, Front
6	109-7173	2	Bearing-Cross Shaft, Rear
7	116-1700	4	Bolt-CARR
8	99-5107	15	Nut-Lock
9	3231-7	3	Screw-CARR
10	104-8301	8	Nut-HF, NI
11	109-8353	4	Trunnion
12	109-8007	4	Link-Adjuster, Deck Lift
13	109-7840	4	Adjuster-Lift, Deck
14	3218-5	4	Nut-Jam
15	109-9840	4	Screw-Shoulder, HHF
16	3256-28	2	Washer-Flat
17	116-0797-03	1	Link-Lift, Deck
18	116-2022	2	Screw-HHF, Shoulder
19	126-7866	1	HOC ASM
19:2	126-9275	1	Decal-HOC
19:3	135-1432	1	Decal-HOC, Outer
20	116-5584	1	Pin-HOC
21	116-0559	1	Bolt-TAP
22	3296-23	1	Nut-Lock, NI
23	109-0966	2	Deck Strut ASM
23:1	109-5009	2	Bushing-Suspension, Rubber
23:2	109-5010	2	Spacer
24	86-1990	6	Washer-Thrust
25	109-5013	1	Panhard Rod ASM
25:2	109-5009	2	Bushing-Suspension, Rubber
25:3	109-5010	2	Spacer
26	325-10	2	Screw-HH
27	3233-34	1	Screw-CARR
28	325-17	1	Screw-HH
29	3233-26	2	Screw-CARR, Short Neck
33	135-1215	1	Spacer-Pivot
34	32151-91	1	Ring-Retaining
35	3231-9	1	Screw-CARR
36	1-513435	2	Washer-Spring
37	325-11	3	Screw-HH

Hydraulic Lift and Fold Assembly

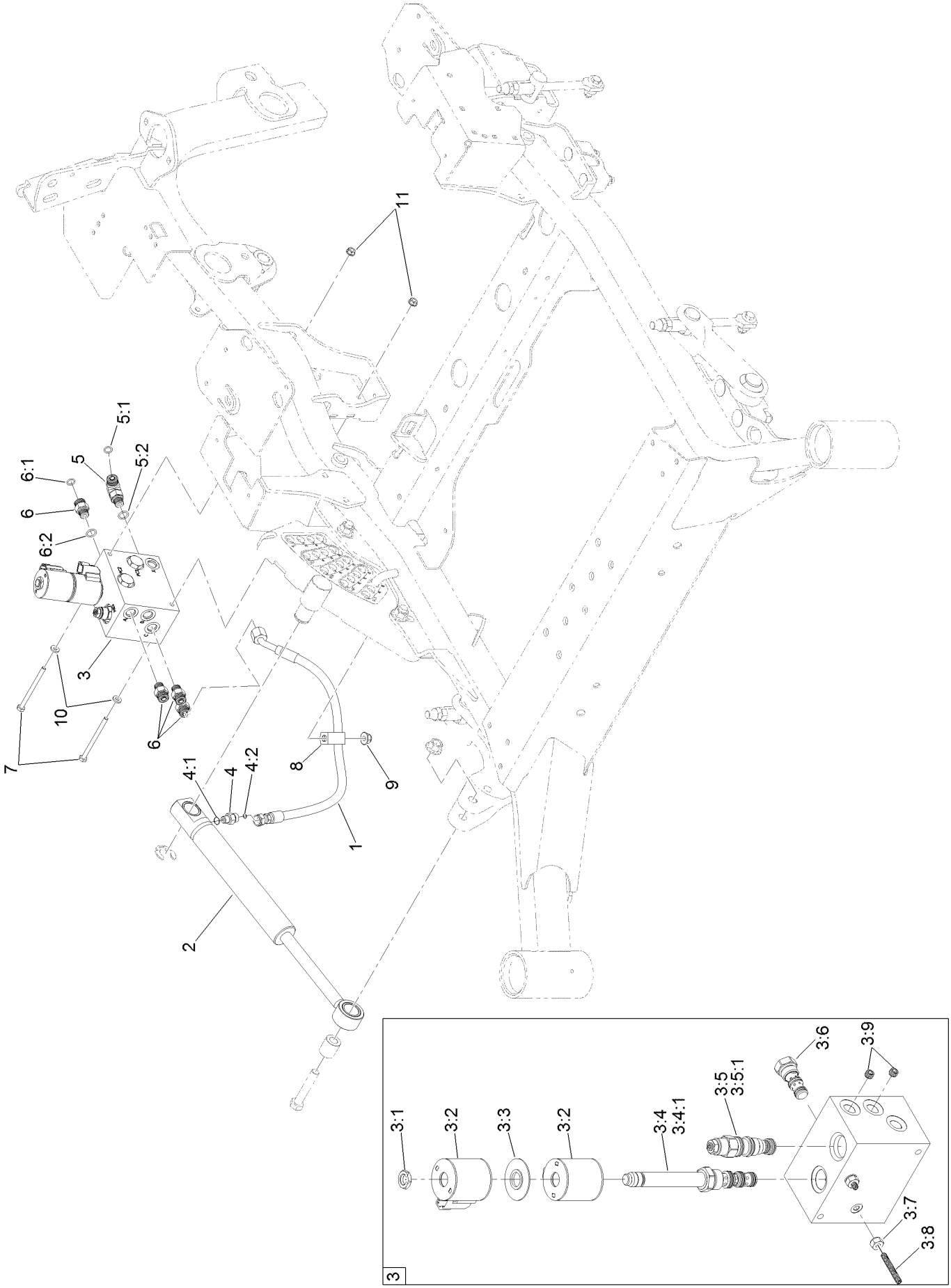

Hydraulic Lift and Fold Assembly (continued)

Ref.	Part Number	Qty.	Description
1	126-8683	1	Hose ASM
2	126-7841	1	Lift Cylinder ASM
3	135-4560	1	Lift And Hold Valve ASM
3:1	110-2634	1	Nut-Coil
3:2	115-3021	2	Coil-12V
3:3	117-8316	1	Spacer-E Coil
3:4	135-4546	1	Solenoid Valve ASM
3:4:1	110-8908	1	Spool Valve Seal Kit
3:5	135-4543	1	Valve-Counterbalance
3:5:1	114-5083	1	Seal Kit
3:6	135-4547	2	Valve-Check, Po
3:7	135-4544	2	Screw-Set
3:8	135-4545	2	Nut-Sealing, Hex
3:9	110-8889	2	Plug-Orifice (0.020)

Ref.	Part Number	Qty.	Description
4	126-8692	1	Fitting-HYD, Straight
4:1	237-78	1	O-Ring
4:2	237-21	1	O-Ring
5	340-77	1	Fitting-Elbow, 90 DEG
5:1	237-22	1	O-Ring
5:2	237-42	1	O-Ring
6	340-2	4	Fitting-Straight
6:1	237-22	1	O-Ring
6:2	237-42	1	O-Ring
7	321-19	2	Screw-HH
8	1-633396	1	Clip-Loom
9	104-8301	1	Nut-HF, NI
10	3256-16	2	Washer-Flat
11	32128-33	2	Nut-HF

Engine and Air Cleaner Assembly

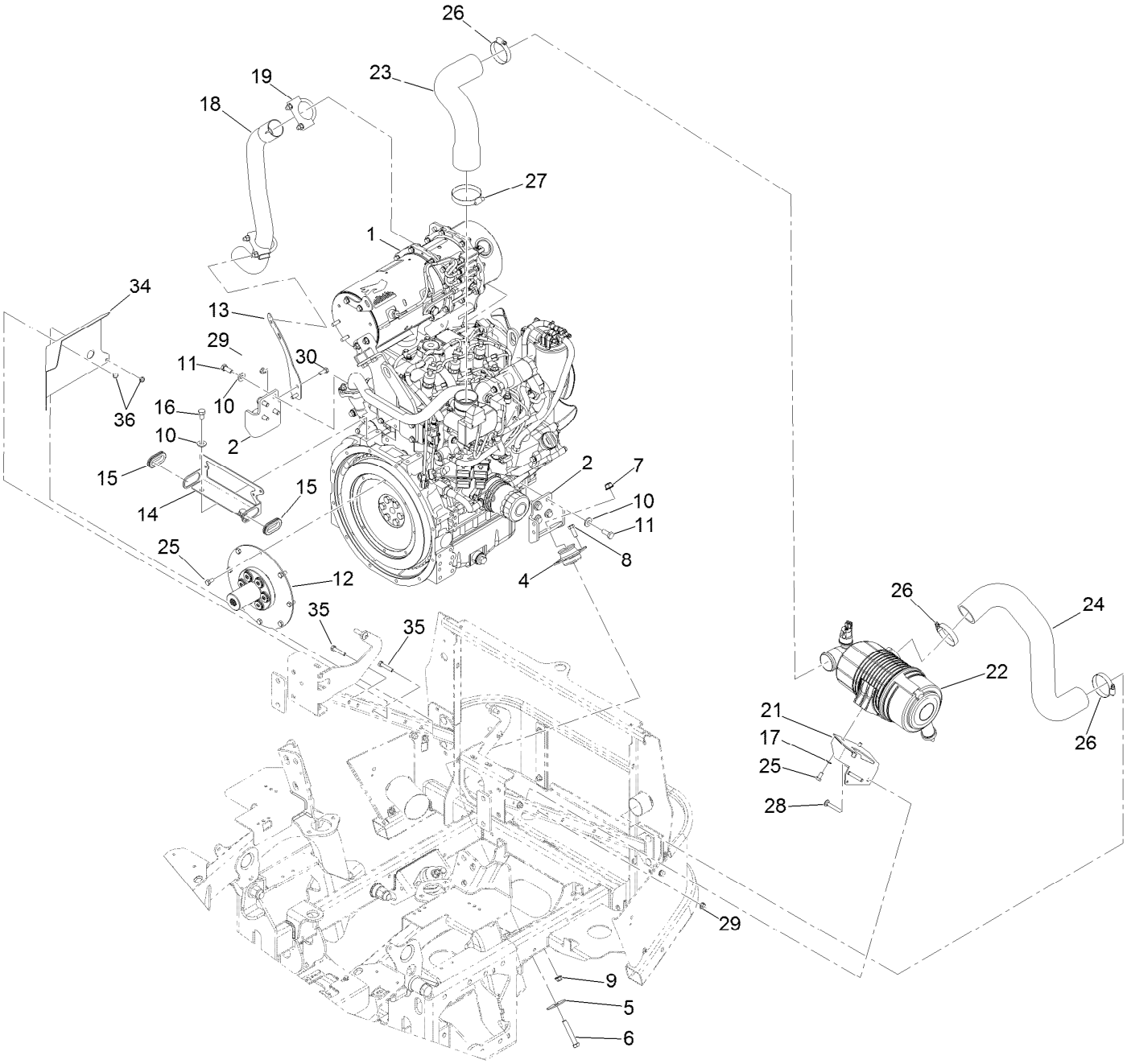

Engine and Air Cleaner Assembly (continued)

Ref.	Part Number	Qty.	Description
1	138-6927	1	Engine-Yanmar, 3Tnv88C-Dtr5
2	120-9180-03	2	Mount-Motor, Upper
4	130-2486	2	Mount
5	87-5100	2	Washer-Snubbing
6	324-11	2	Screw-HH
7	114-8417	2	Nut-HF, NI
8	323-6	4	Screw-HH
9	104-8301	4	Nut-HF, NI
10	98-5975	10	Washer-Belleville
11	33115-025	8	Screw-HH
12	120-9131	1	Coupling-Flywheel
13	126-8587-03	1	Bracket-Mount
14	126-7602-03	1	Bracket-Guide
15	240-7	2	Grommet-Rubber
16	33115-016	2	Screw-HH
17	3290-475	2	Washer-Belleville
18	126-7652	1	Tube-Exhaust
19	18-2130	2	Clamp
21	126-8730-03	1	Bracket-Cleaner, Air
22	126-7646	1	Air Cleaner ASM
23	120-9199	1	Hose-Air
24	120-9177	1	Hose-Air
25	99-5132	10	Bolt
26	2412-130	3	Clamp-Hose
27	2412-125	1	Clamp-Hose
28	3230-6	2	Bolt-CARR
29	104-8300	4	Nut-HF, NI
30	322-4	2	Screw-HH
34	135-3946-03	1	Deflector-Air
35	322-8	2	Screw-HH
36	3296-47	2	Nut-Lock, NI

Air Cleaner Assembly No. 126-7646

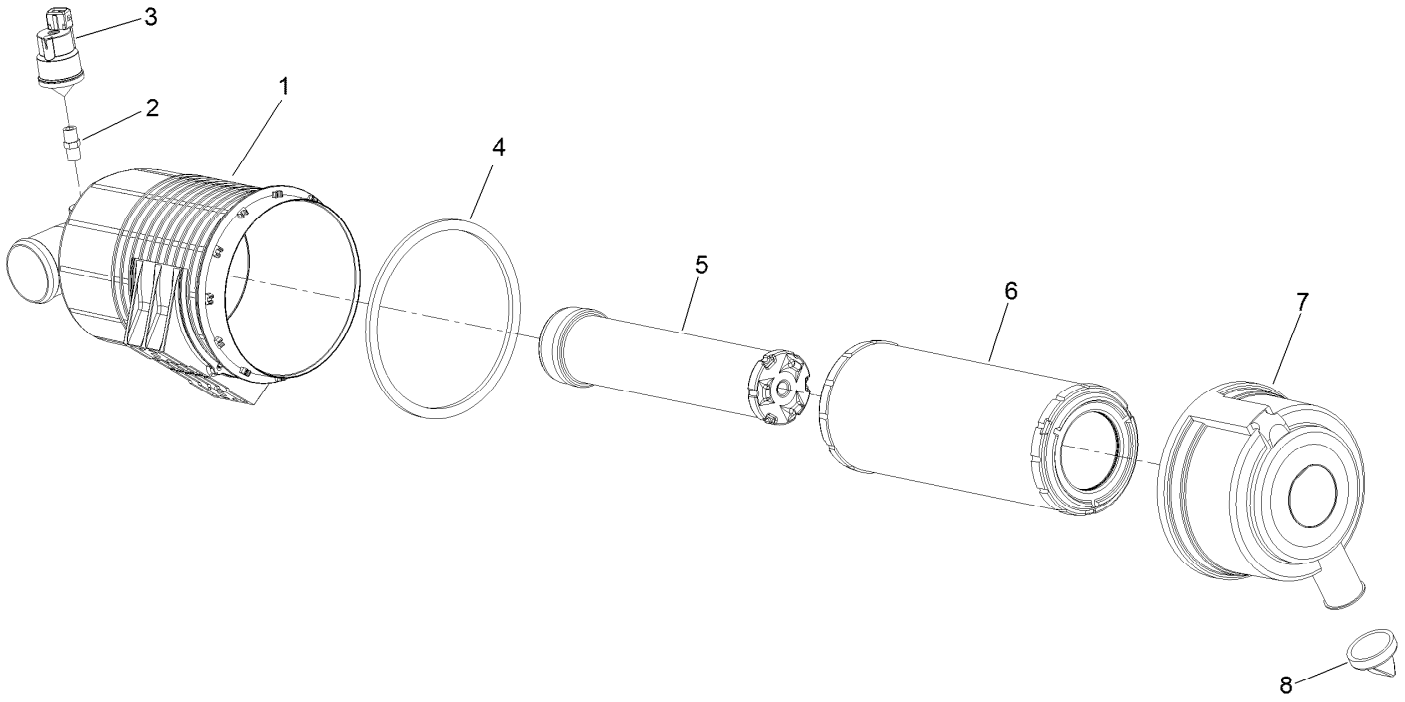

Air Cleaner Assembly No. 126-7646 (continued)

Ref.	Part Number	Qty.	Description
1	126-7647	1	Body-Cleaner, Air
2	105-4292	1	Nipple-Pipe
3	126-7651	1	Indicator-Mini
4	104-4897	1	Gasket
5	114-4057	1	Element-Safety
6	108-3810	1	Filter-Air
7	104-0497	1	Cover
8	104-0498	1	Valve-Vacuator

Hood and Tank Cover Assembly

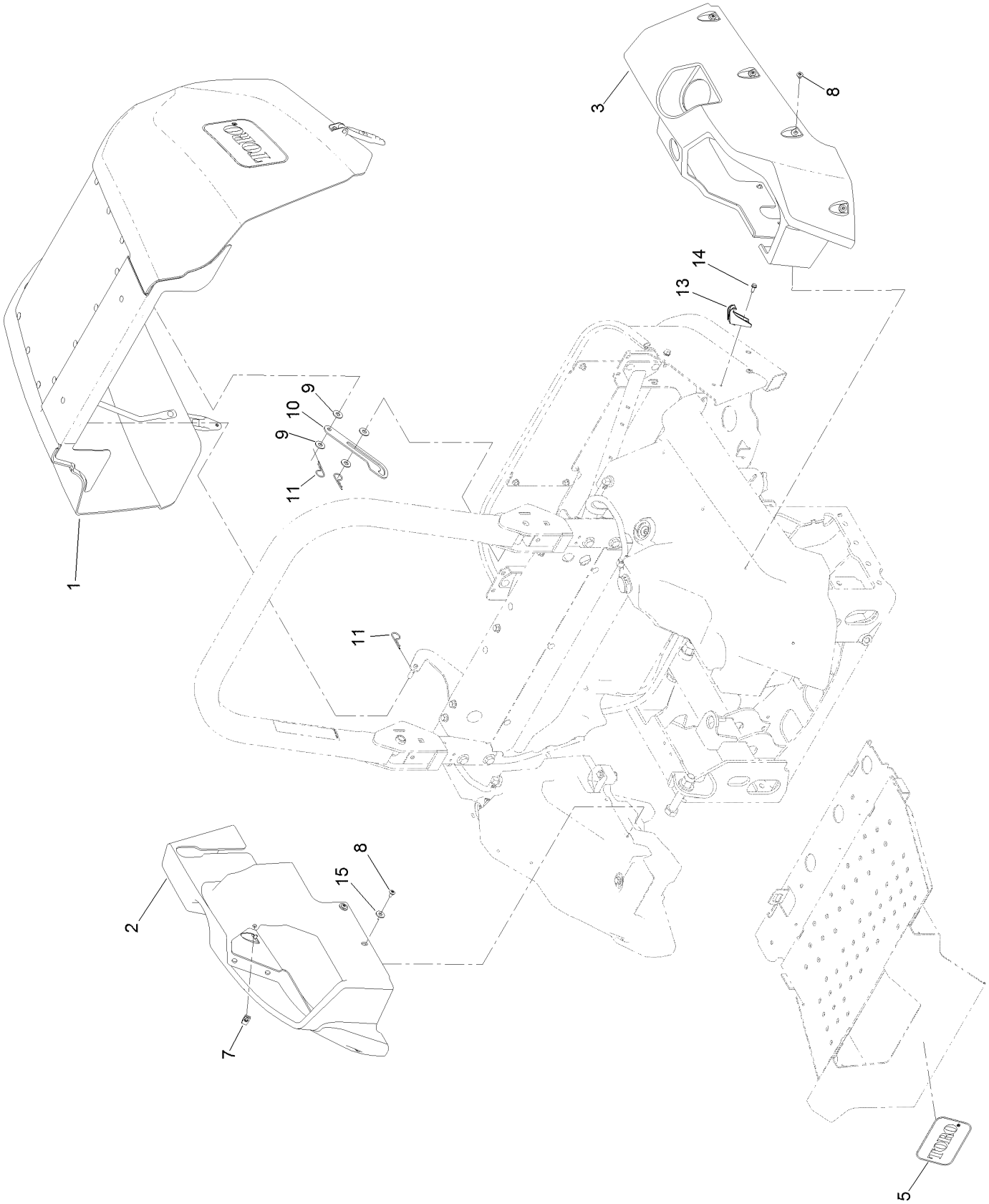

Hood and Tank Cover Assembly (continued)

Ref.	Part Number	Qty.	Description
1		1	Hood ASM ●
2	126-8655	1	Cover-Tank, RH
3	126-8656	1	Cover-Tank, LH
5	68-3640	1	Decal
7	107069	1	Clip
8	126-8216	12	Screw-Torx
9	3256-4	4	Washer-Flat
10	120-9129	1	Prop-Hood
11	3290-255	3	Pin-Cotter, Hair
13	126-8672	2	Latch-Catch
14	32144-10	2	Screw-HWH
15	3256-71	4	Washer-Flat

● Not serviced separately

Hood Assembly

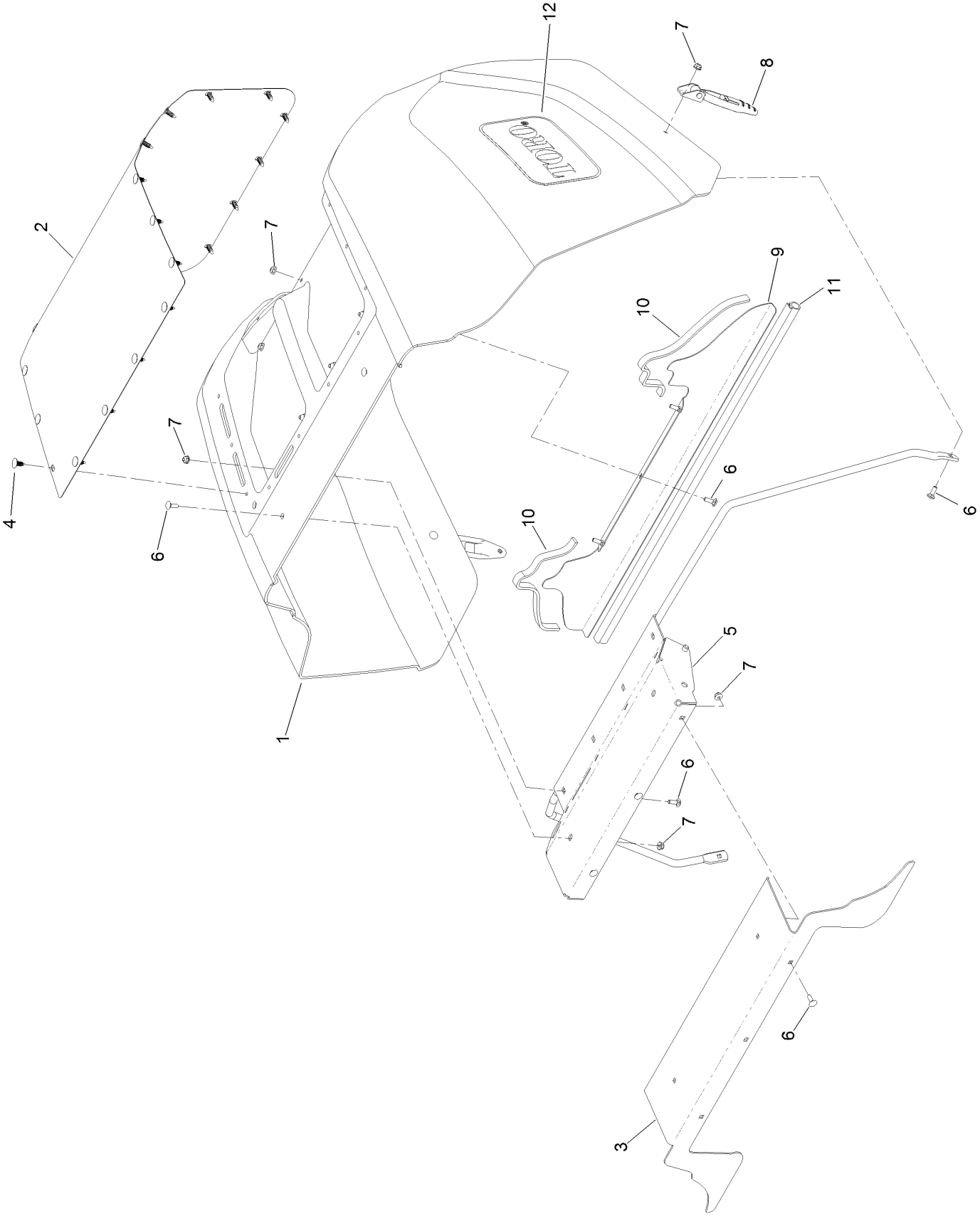

Hood Assembly (continued)

Ref.	Part Number	Qty.	Description
1	126-8654	1	Hood
2	126-6785-03	1	Screen-Intake
3	126-8648-03	1	Hood-Block Off
4	117-2382	22	Plug-Plastic
5	126-6524-03	1	Support-Hood
6	3229-1	14	Screw-CARR
7	104-7201	14	Nut-HF
8	103-2898	2	Latch-Rubber
9	126-6849-03	1	Plate-Seal
10	126-6848	2	Seal-Foam
11	126-6846	1	Seal-Bulb
12	62-7400	2	Decal

Transmission Assembly

Transmission Assembly (continued)

Ref.	Part Number	Qty.	Description
1	131-5510	1	Transmisson ASM
2	48-9590	16	Washer-Lock
3	33115-045	13	Screw-HH
4	33115-035	3	Screw-HH
5	125-2836	1	Housing-Flywheel
8	3256-6	2	Washer-Flat
9	99-5107	2	Nut-Lock
10	126-6095	2	Mount-Isolator
11	86-1990	2	Washer-Thrust
12	325-15	2	Screw-HH
13	112-9542	1	HYD Gear Pump ASM
14	3256-23	2	Washer-Plain
15	3253-4	2	Washer-Lock

Ref.	Part Number	Qty.	Description
16	33114-025	2	Screw-HH
17	108-9920	1	Coupler-Spline
18	108-9919	1	O-Ring
19	114-4088	1	Shield-Seal
20	33115-016	2	Screw-HH
21	340-132	1	Fitting-Elbow, 90 DEG
21:1	237-78	1	O-Ring
21:2	237-21	1	O-Ring
22	126-8689	1	Tube ASM
23	126-6806	1	Support-Tube
24	32180-030	1	Clip-Tie
25	87-1910	2	Pin-Dowel
26	108-5194	1	Filter-Oil, HYD

Charge Pump Housing Assembly
Transmission Assembly No. 131-5510

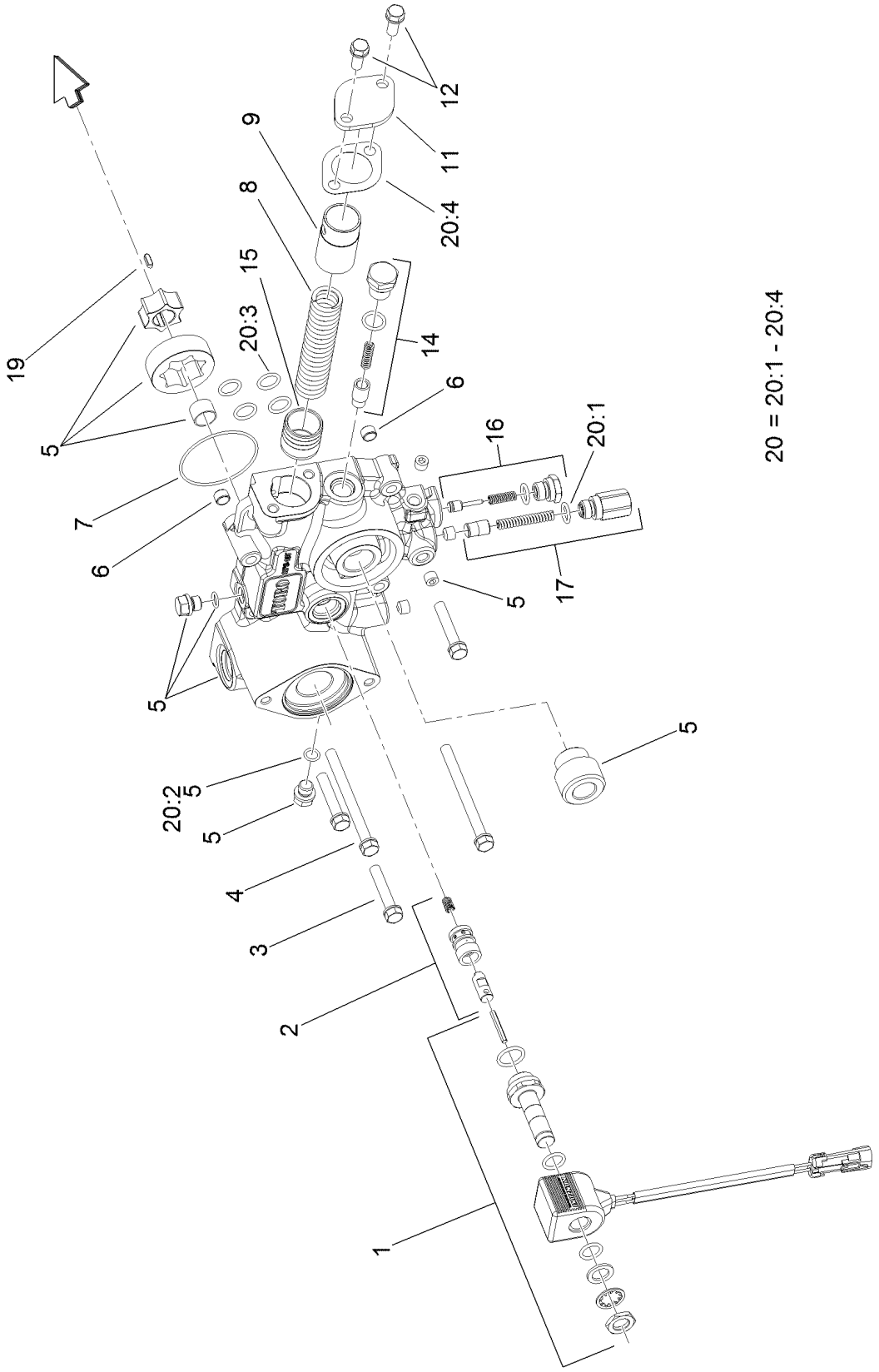

Charge Pump Housing Assembly
Transmission Assembly No. 131-5510 (continued)

Ref.	Part Number	Qty.	Description
1	107-0851	1	Solenoid ASM
2	107-0850	1	Solenoid Valve ASM
3	107-0863	3	Bolt
4	107-0864	2	Bolt
5	107-0840	1	Pump Body ASM
6	107-0848	2	Pin
7	107-0856	1	O-Ring
8	107-0845	1	Spring
9	107-0844	1	Collar
11	107-0846	1	Cover
12	93-0457	2	Bolt And Washer ASM

Ref.	Part Number	Qty.	Description
14	107-0843	1	Filter Bypass Valve ASM
15	107-0818	1	Piston
16	107-0842	1	Charge Relief Valve ASM
17	107-0841	1	Pressure Valve ASM
19	107-0865	1	Key
20	107-0855	1	Charge Pump Seal Kit
20:1	93-0418	2	O-Ring
20:2	107-0817	2	O Ring-Plug
20:3	104-3298	6	Packing
20:4	107-0847	1	Gasket

Center Section Assembly
Transmission Assembly No. 131-5510

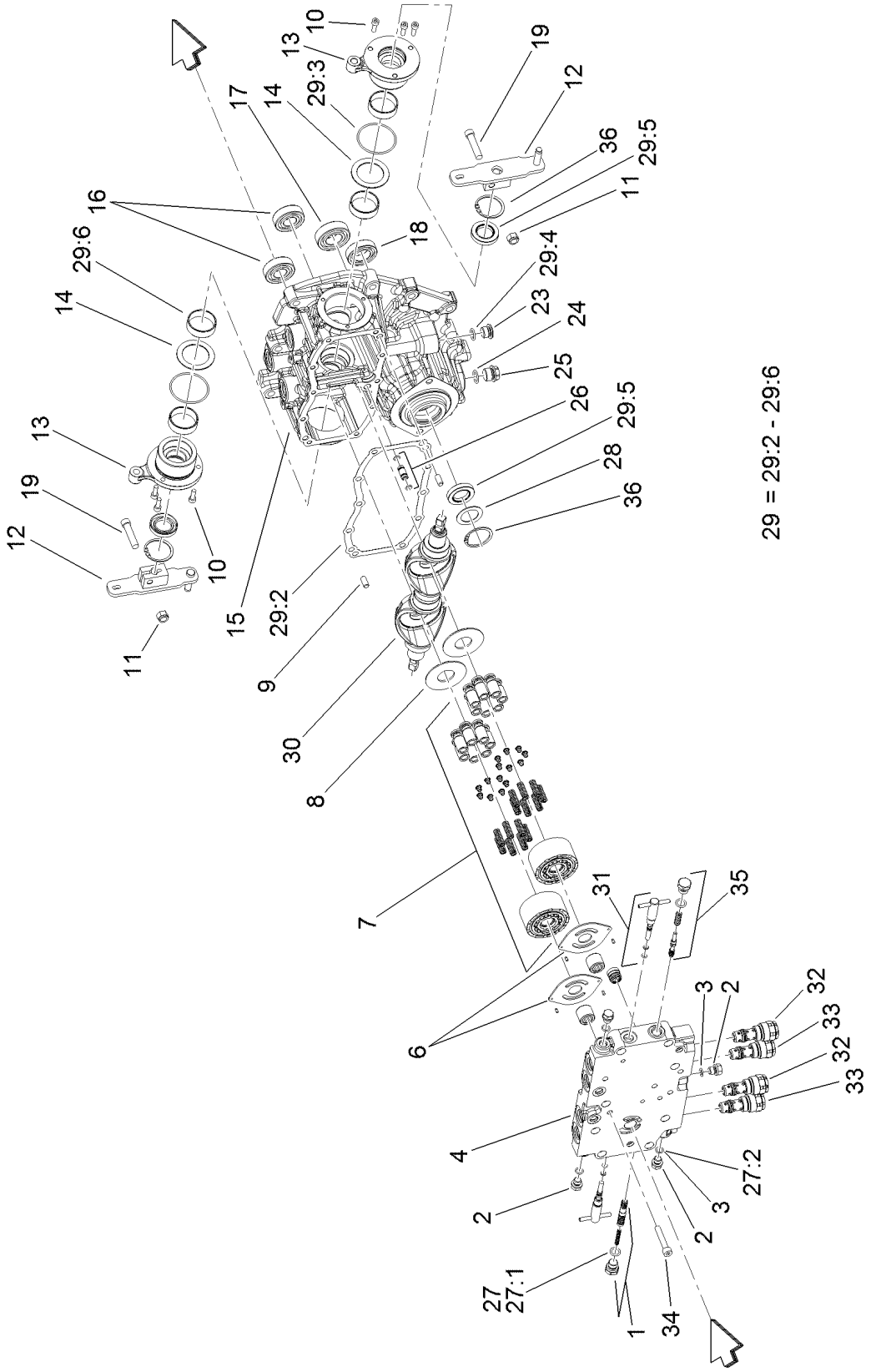

Center Section Assembly
Transmission Assembly No. 131-5510 (continued)

Ref.	Part Number	Qty.	Description
1	107-0807	1	Valve-Flushing, RH
2	107-0857	6	Plug
3	107-0817	6	O Ring-Plug
4	121-3377	1	Center Case, Complete
6	107-0805	2	Plate-Valve
7	107-0824	2	Cylinder Block ASM
8	107-0830	2	Plate-Thrust
9	92-0765	4	Pin-Parallel
10	107-0859	6	Bolt
11	120-6681	2	U-Nut
12	120-6680	2	Arm-Control
13	107-0832	2	Side Cover ASM
14	107-0829	2	Washer
15	120-5151	1	Pump Housing ASM
16	107-0826	2	Bearing
17	107-0821	1	Bearing
18	107-0838	1	Bearing
19	120-6682	2	Bolt
23	107-0861	1	Plug-NPTF
24	237-79	1	O-Ring
25	107-0867	1	Plug
26	107-0812	1	Pipe
27	107-0852	1	Center Case Seal Kit
27:1	93-0418	2	O-Ring
27:2	107-0817	6	O Ring-Plug
28	107-0813	1	Spacer
29	107-0853	1	Pump Housing Seal Kit
29:2	107-0810	1	Gasket-Case, Center
29:3	107-0817	2	O Ring-Plug
29:4	104-3298	1	Packing
29:5	107-0814	3	Seal
29:6	107-0825	4	Ring-Seal
30	120-6679	2	Plate-Swash
31	107-0808	2	Valve-Bypass
32	107-0804	2	Valve-Rear
33	107-0803	2	Valve-Front
34	107-0863	8	Bolt
35	107-0806	1	Valve-Flushing, LH
36	92-0757	2	Ring-Snap

Gear Case and Clutch Assembly
Transmission Assembly No. 131-5510

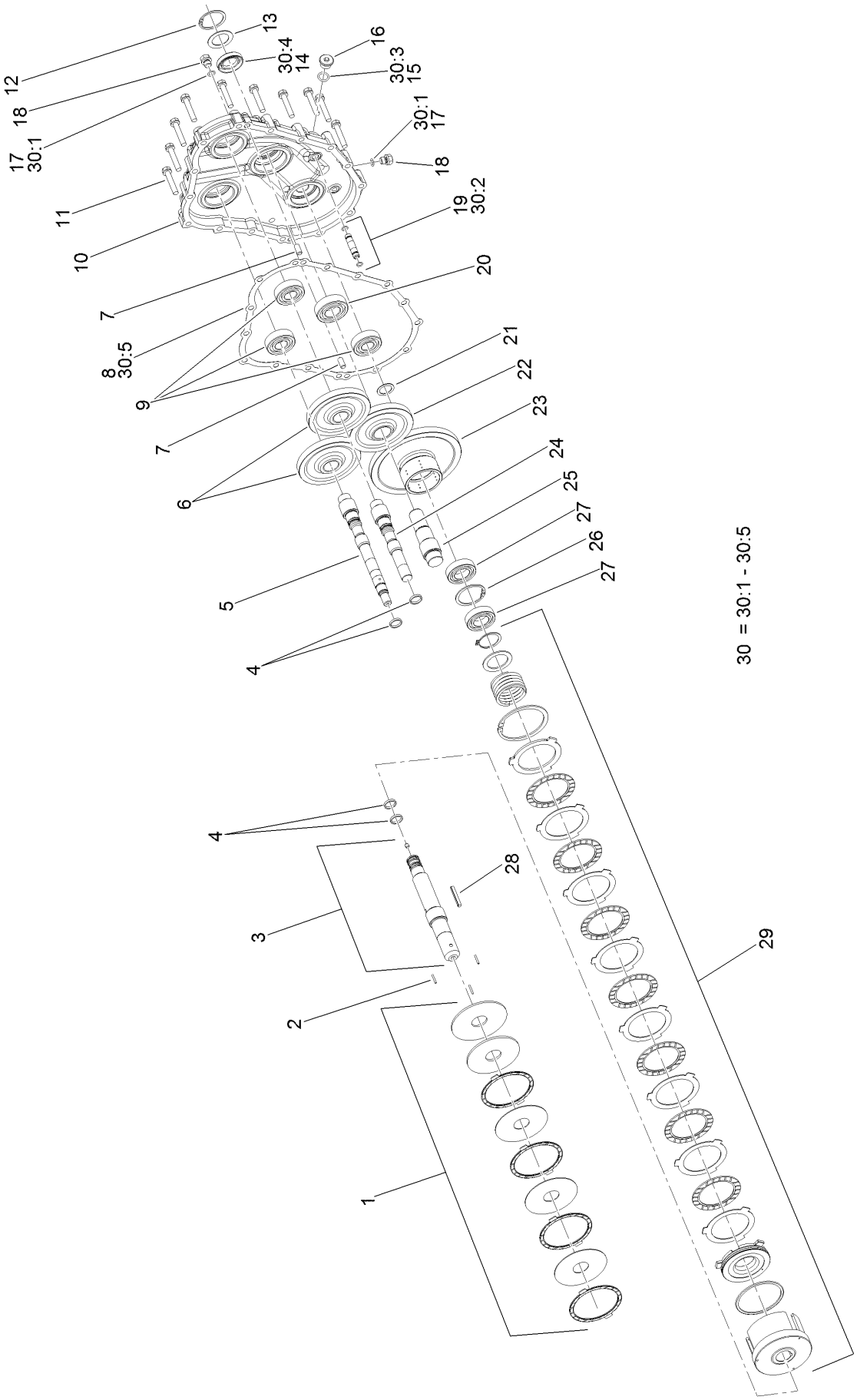

Gear Case and Clutch Assembly
Transmission Assembly No. 131-5510 (continued)

Ref.	Part Number	Qty.	Description
1	107-0839	1	PTO Brake ASM
2	107-0837	3	Rod-Push
3	107-0833	1	PTO Shaft ASM
4	107-0825	2	Ring-Seal
5	107-0827	1	Shaft-Pump
6	107-0823	2	Gear-Pump
7	92-0765	4	Pin-Parallel
8	107-0816	1	Gasket-Housing, Gear
9	107-0826	4	Bearing
10	120-5152	1	Housing-Case, Gear
11	107-0863	13	Bolt
12	92-0757	1	Ring-Snap
13	107-0813	1	Spacer
14	107-0814	1	Seal
15	104-3298	1	Packing
16	107-0861	1	Plug-NPTF
17	107-0817	6	O Ring-Plug
18	107-0857	6	Plug
19	107-0811	1	Pipe
20	107-0821	2	Bearing
21	107-0836	1	Spacer
22	107-0820	1	Gear-Input
23	107-0834	1	Gear-PTO
24	107-0822	1	Shaft-Pump
25	107-0819	1	Shaft-Input
26	92-0758	1	Ring-Snap
27	107-0838	3	Bearing
28	107-0866	1	Key
29	107-0835	1	Clutch Cylinder ASM
30	107-0854	1	Gear Housing Seal Kit
30:1	107-0817	2	O Ring-Plug
30:2		2	O-Ring ●
30:3	104-3298	1	Packing
30:4	107-0814	1	Seal
30:5	107-0816	1	Gasket-Housing, Gear

● Not serviced separately

Hydraulic Gear Pump Assembly No. 112-9542

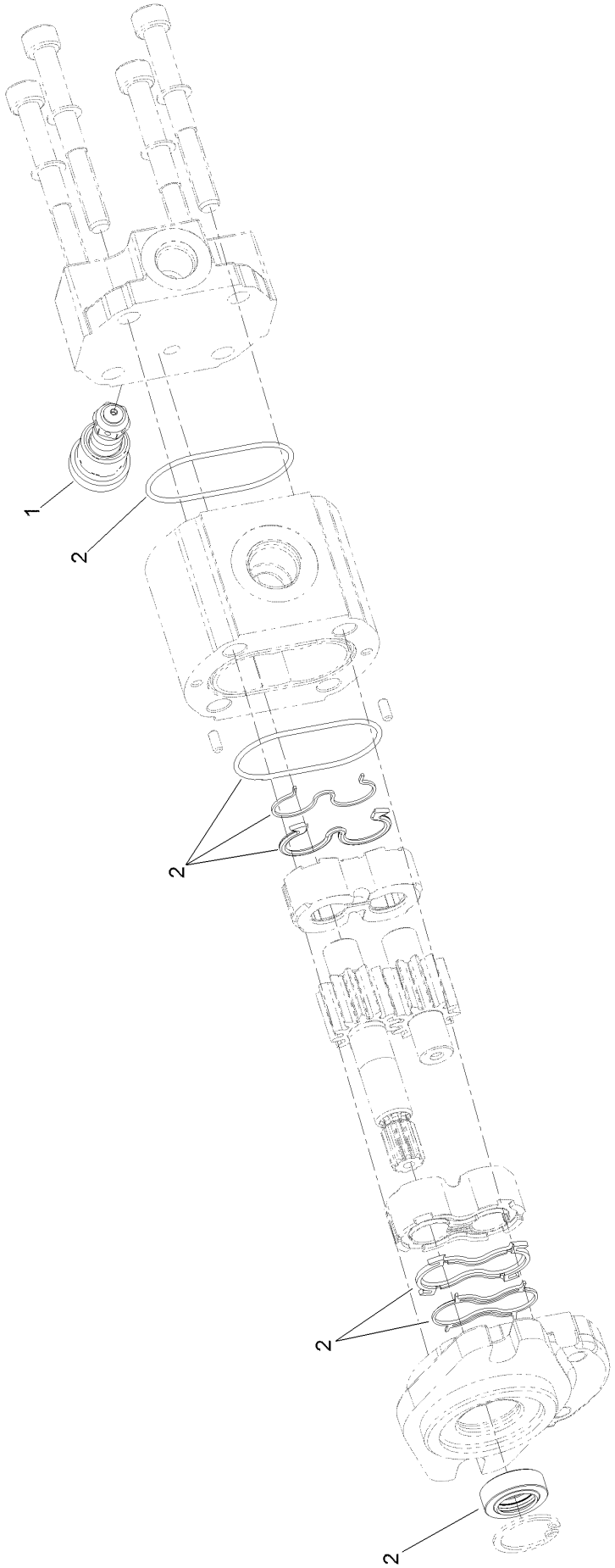

Hydraulic Gear Pump Assembly No. 112-9542 (continued)

Ref.	*Part Number*	*Qty.*	*Description*
1	112-0198	1	Valve
2	112-0199	1	Seal Kit

Cooling Assembly

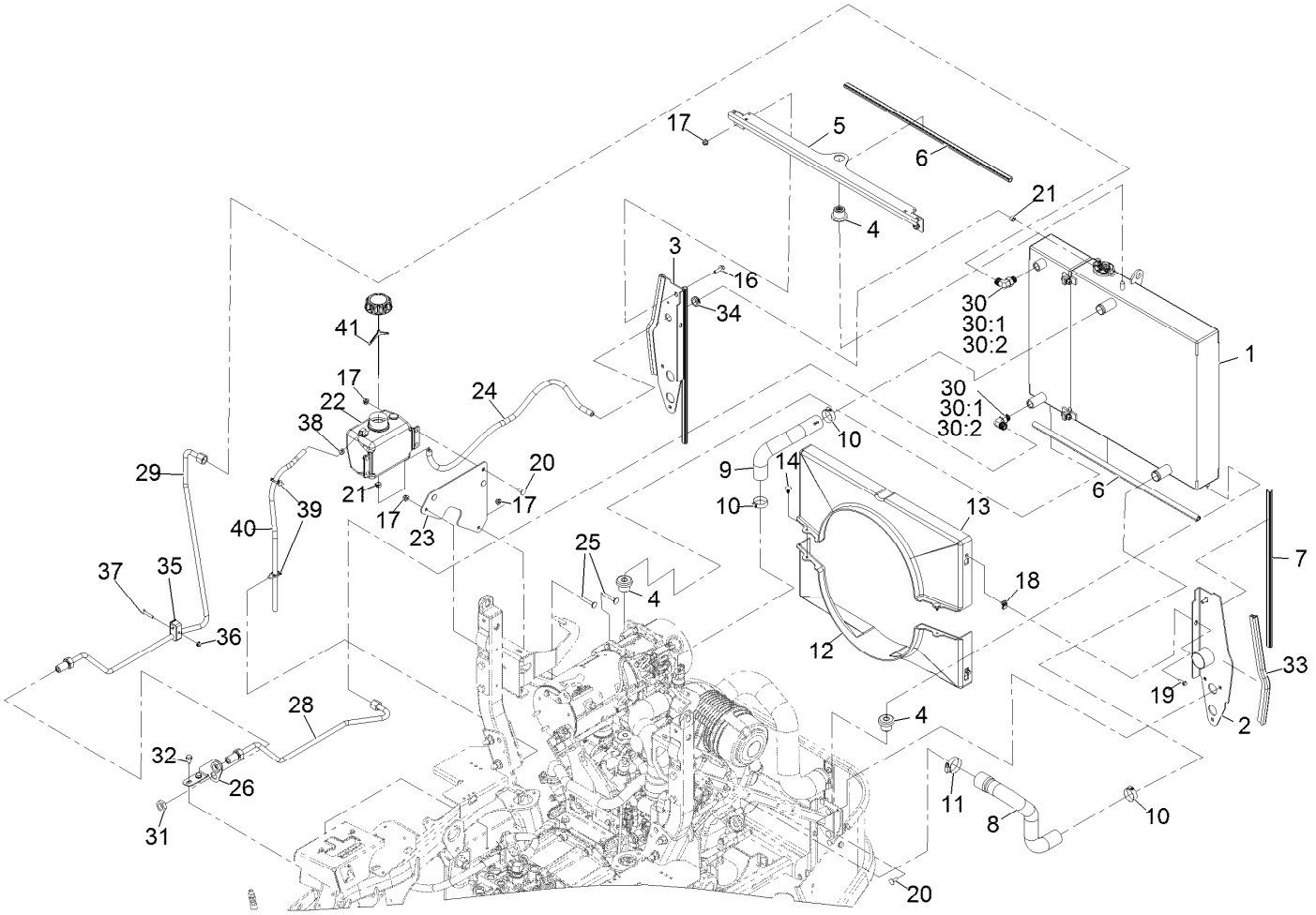

Cooling Assembly (continued)

Ref.	Part Number	Qty.	Description
1	121-3330	1	Cooling ASM
2	126-9026-03	1	Support-Radiator, LH
3	126-9028-03	1	Support-Radiator, RH
4	119-1422	3	Mount-Isolator
5	120-0068-03	1	Bracket-Cooling, Top
6	119-1427	2	Seal-Bulb
7	119-1426	2	Seal-Bulb
8	121-3322	1	Hose-Radiator, Lower
9	121-3321	1	Hose-Radiator, Upper
10	2412-34	3	Clamp-Hose
11	2412-130	1	Clamp-Hose
12	121-3311	1	Shroud-Bottom
13	121-3312	1	Shroud-Top
14	117-2382	2	Plug-Plastic
16	3234-29	2	Screw-HHF
17	104-8300	13	Nut-HF, NI
18	107069	4	Clip
19	32105-15	4	Screw-HWH
20	3230-23	9	Screw-CARR
21	92-2379	2	Clamp-Hose
22	135-4692	1	Tank-Overflow, W/Cap
23	126-9178-03	1	Bracket-Bottle
24	126-7648	1	Hose
25	3230-6	2	Bolt-CARR
26	126-6781-03	1	Bracket-Bulkhead
28	126-8691	1	Hydraulic Tube ASM
29	126-8690	1	Hydraulic Tube ASM
30	340-98	2	Fitting-Elbow, 90 DEG
30:1	237-79	1	O-Ring
30:2	237-30	1	O-Ring
31	340-127	2	Nut-Bulkhead
32	32144-70	2	Screw-HWHTF
33	126-6847	2	Seal-Bulb
34	237-124	1	Grommet
35	135-0641	1	Clamp-Twin
36	104-7201	1	Nut-HF
37	321-13	1	Screw-HH
38	2412-98	1	Clamp-Hose
39	32180-030	2	Clip-Tie
40	110-4103	1	Hose-Fuel
41	135-4693	1	Cap-W/Tether

Cooling Assembly No. 121-3330

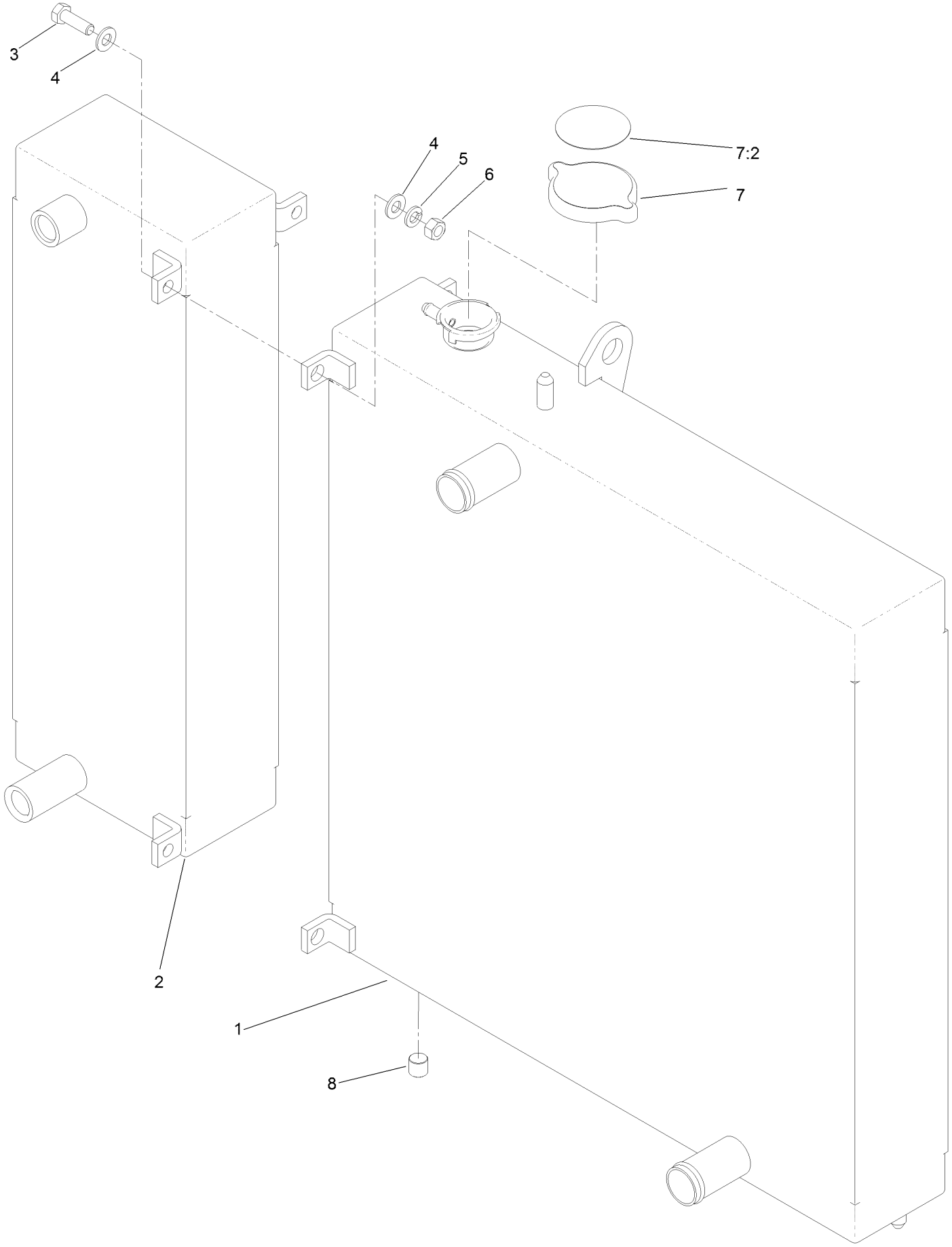

Cooling Assembly No. 121-3330 (continued)

Ref.	Part Number	Qty.	Description
1	121-3328	1	Radiator
2	121-3329	1	Oil Cooler
3	322-5	3	Screw-HH
4	3256-23	6	Washer-Plain
5	3253-4	3	Washer-Lock
6	3217-6	3	Nut-Hex
7	119-1430	1	Radiator Cap ASM
7:2	117-3276	1	Decal-Danger
8	99-8551	1	Plug-Pipe

Center Deck Assembly

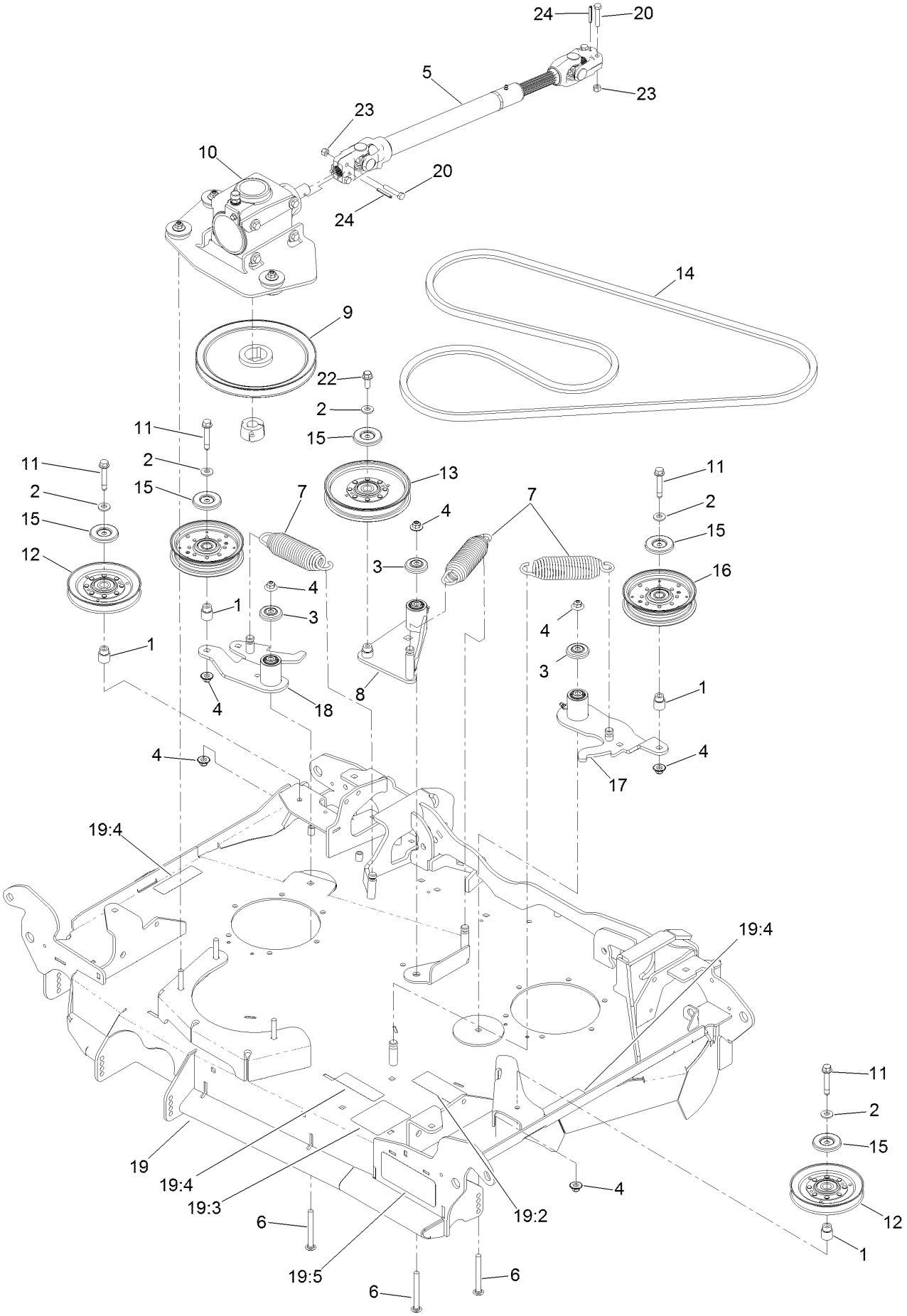

Center Deck Assembly (continued)

Ref.	Part Number	Qty.	Description
1	1-633456	4	Bushing, Idler
2	98-5975	5	Washer-Belleville
3	103-2916	3	Guard-Top
4	109-6658	7	Nut-Flange, NI
5	110-3575	1	Driveshaft ASM
6	116-1502	3	Bolt-Shoulder, Carriage
7	116-6317	3	Spring-Extension
8	126-2585	1	Idler Arm ASM
9	126-2822	1	Pulley
10	126-2951	1	Gearbox ASM
11	126-2956	4	Screw-HHF
12	126-2960	2	Idler-V
13	126-7685	1	Idler-Pulley
14	126-7924	1	V-Belt
15	126-8043	5	Shield-Dust
16	126-9187	2	Pulley-Idler, Flat
17	126-9435	1	Idler ASM
18	126-9438	1	Idler ASM
19	135-0359	1	Center Deck ASM
19:2	126-9127	1	Decal-Routing, Belt
19:3	109-6036	1	Decal-Roller, Anti-Scalp
19:4	112-9028	3	Decal-Cover, Missing
19:5	136-9041	1	Decal
20	322-9	4	Screw-HH
22	3234-42	1	Screw-HHF
23	3296-29	4	Nut-Lock, NI
24	32121-34	2	Pin-Roll

Driveshaft Assembly No. 110-3575

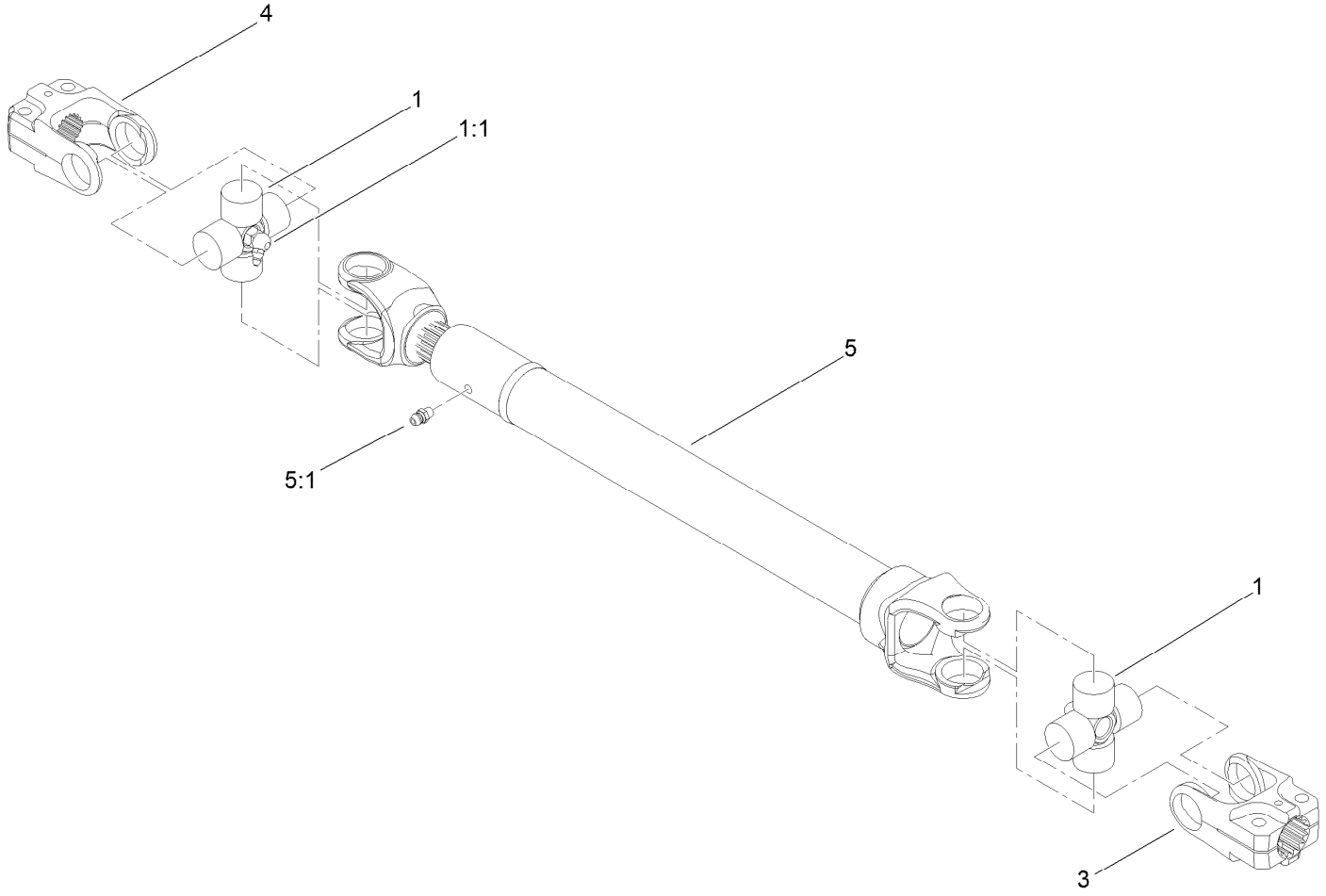

Driveshaft Assembly No. 110-3575 (continued)

Ref.	Part Number	Qty.	Description
1	112-1687	2	Cross And Bearing Kit
1:1	62-3820	1	Fitting-Grease
3	54-9040	1	Yoke-End
4	54-9090	1	Yoke-End
5		1	Tube-Yoke, Slip ●
5:1	302-22	1	Fitting-Grease

● Not serviced separately

Idler Arm Assembly No. 126-2585

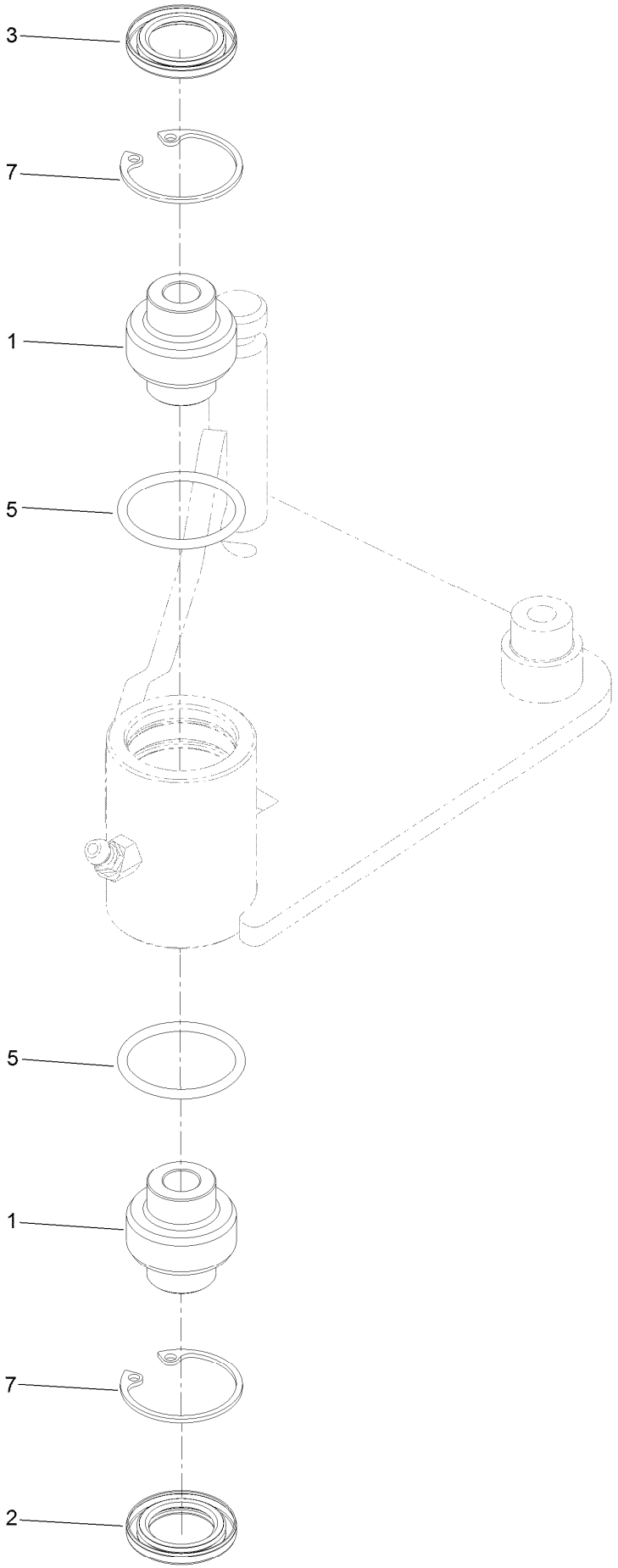

Idler Arm Assembly No. 126-2585 (continued)

Ref.	Part Number	Qty.	Description
1	103-3504	2	Bearing-Spherical
2	103-3505	1	Seal-Lip, Double
3	103-3506	1	Seal-Lip, Single
5	106-7159	2	O-Ring
7	32120-10	2	Ring-Snap

Gear Box and Mount Assembly No. 126-2951

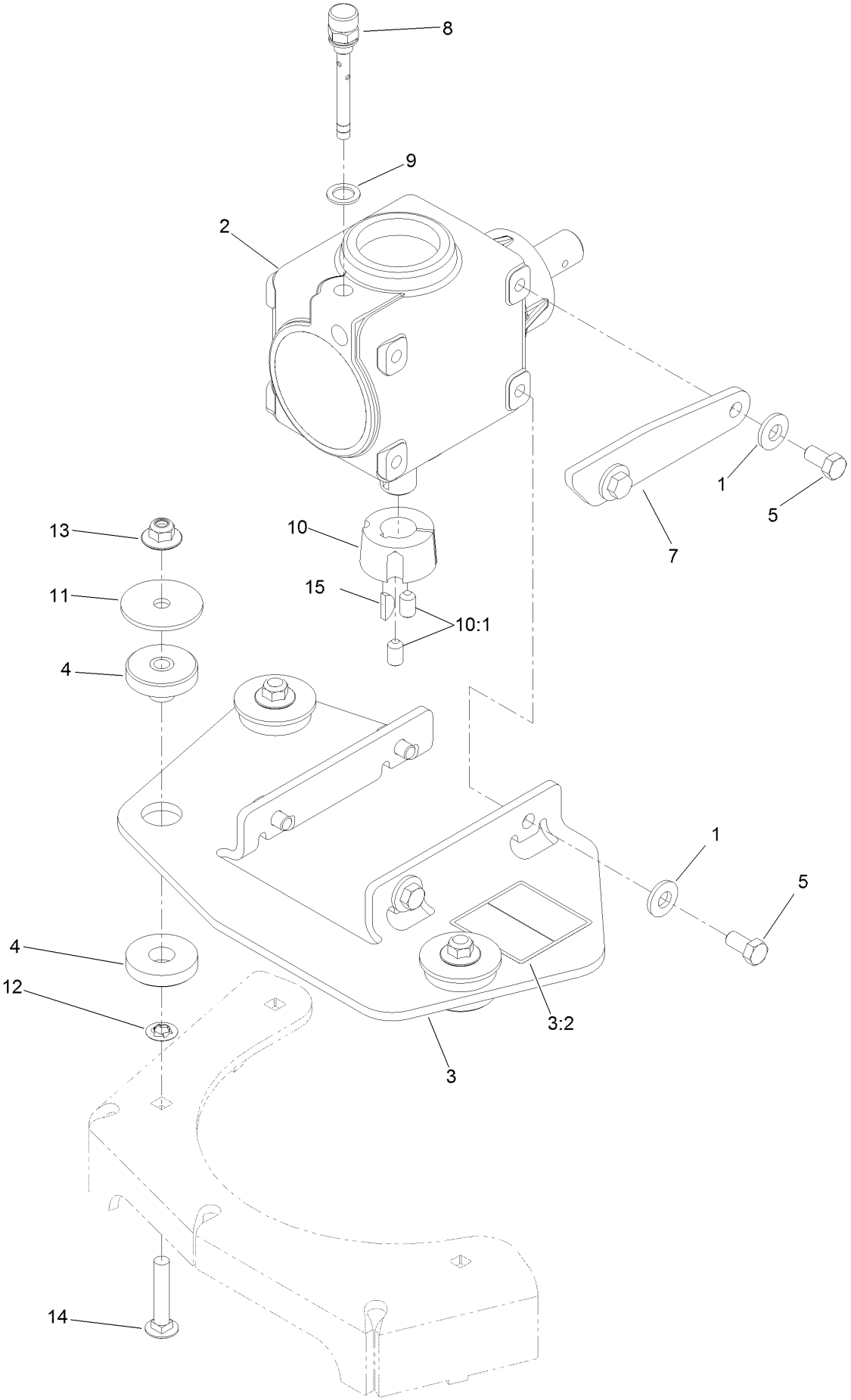

Gear Box and Mount Assembly No. 126-2951 (continued)

Ref.	Part Number	Qty.	Description
1	98-5975	6	Washer-Belleville
2	130-8659	1	Gearbox ASM
3	135-0874	1	Mount-Gearbox
3:2	135-0679	1	Decal-Hazard, Entanglement
4	126-3074	3	Mount-ISO
5	323-4	6	Screw-HH
7	126-3544	1	Stop-Gearbox
8	130-8661	1	Plug-Breather
9	130-4899	1	Washer
10	23-1640	1	Bushing-Taperlock
10:1	3247-4	2	Screw-Set
11	83-1040	3	Washer-Flat
12	107-3154	3	Nut-Push
13	109-6658	3	Nut-Flange, NI
14	3231-6	3	Screw-CARR
15	3257-5	1	Key-Woodruff

Gearbox Assembly No. 130-8659

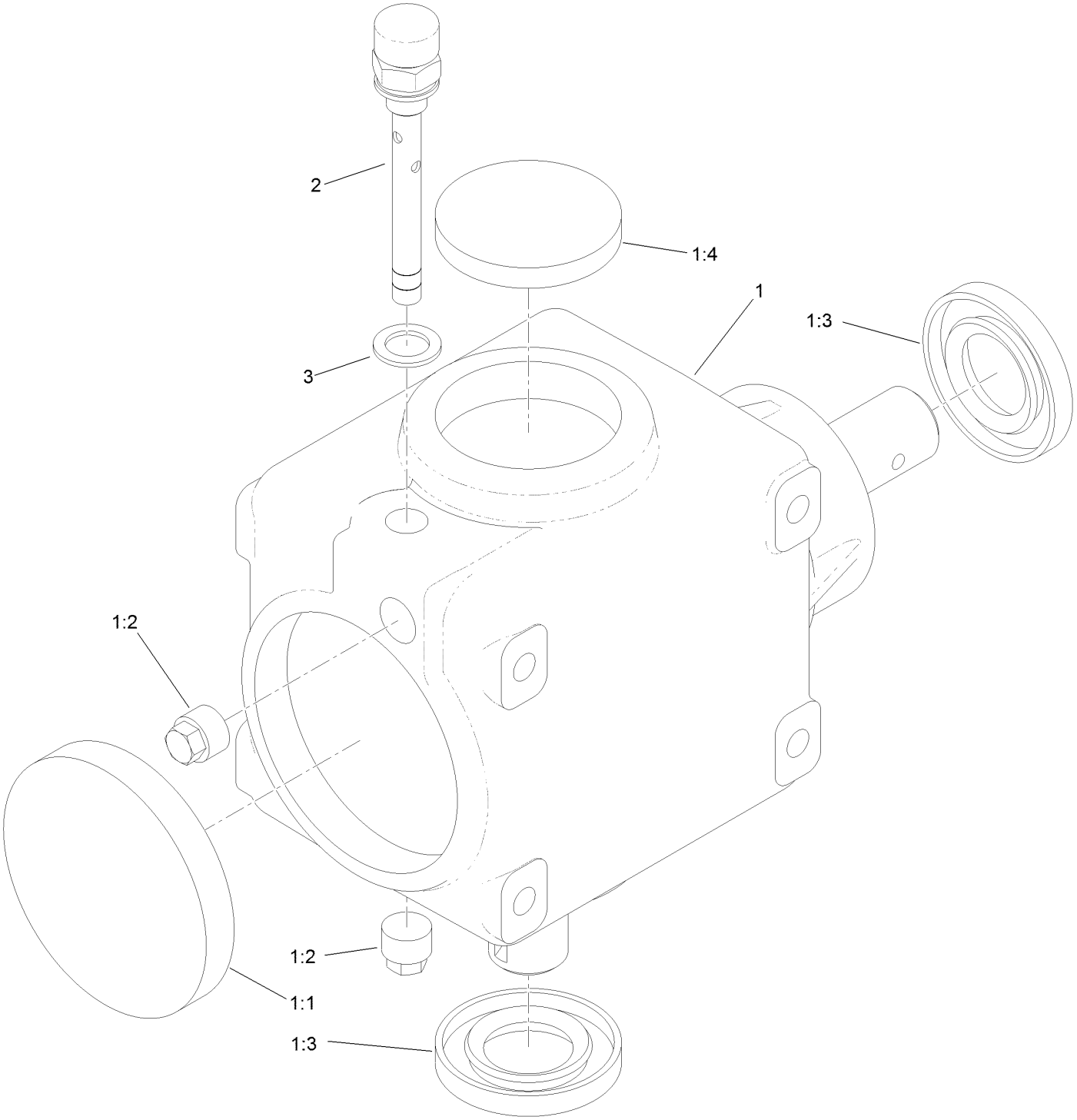

Gearbox Assembly No. 130-8659 (continued)

Ref.	Part Number	Qty.	Description
1		1	Gearbox ASM ●
1:1	107-2932	1	Cap-Oil
1:2	107-2933	2	Plug
1:3	117-9247	2	Seal
1:4	107-2935	1	Cap-Oil
2	130-8661	1	Plug-Breather
3	130-4899	1	Washer

● Not serviced separately

Idler Assembly No. 126-9435

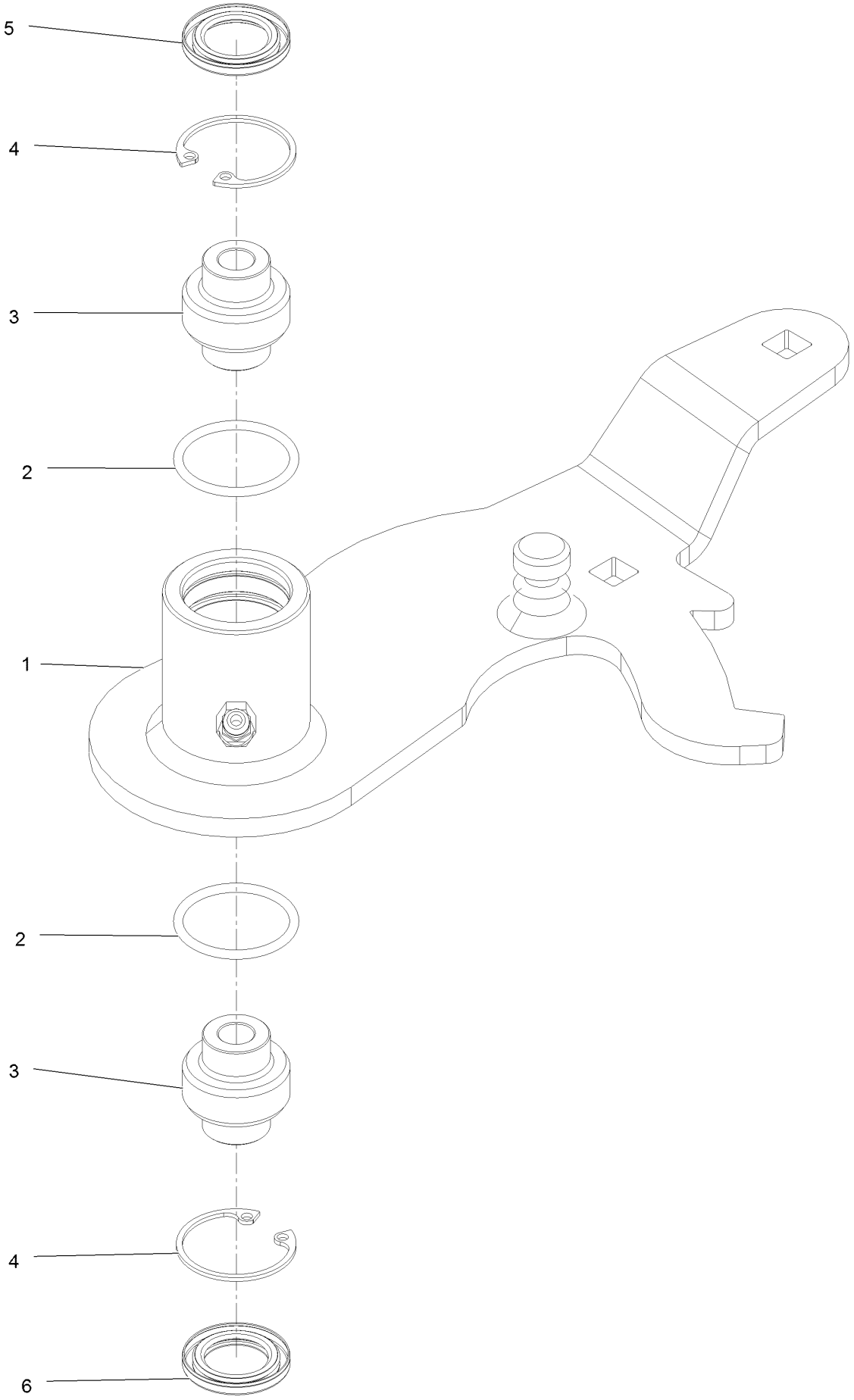

Idler Assembly No. 126-9435 (continued)

Ref.	Part Number	Qty.	Description
1		1	ASM-Idler Arm 96Rd LH [red] ●
2	106-7159	2	O-Ring
3	103-3504	2	Bearing-Spherical
4	32120-10	2	Ring-Snap
5	103-3506	1	Seal-Lip, Single
6	103-3505	1	Seal-Lip, Double

● Not serviced separately

Idler Assembly No. 126-9438

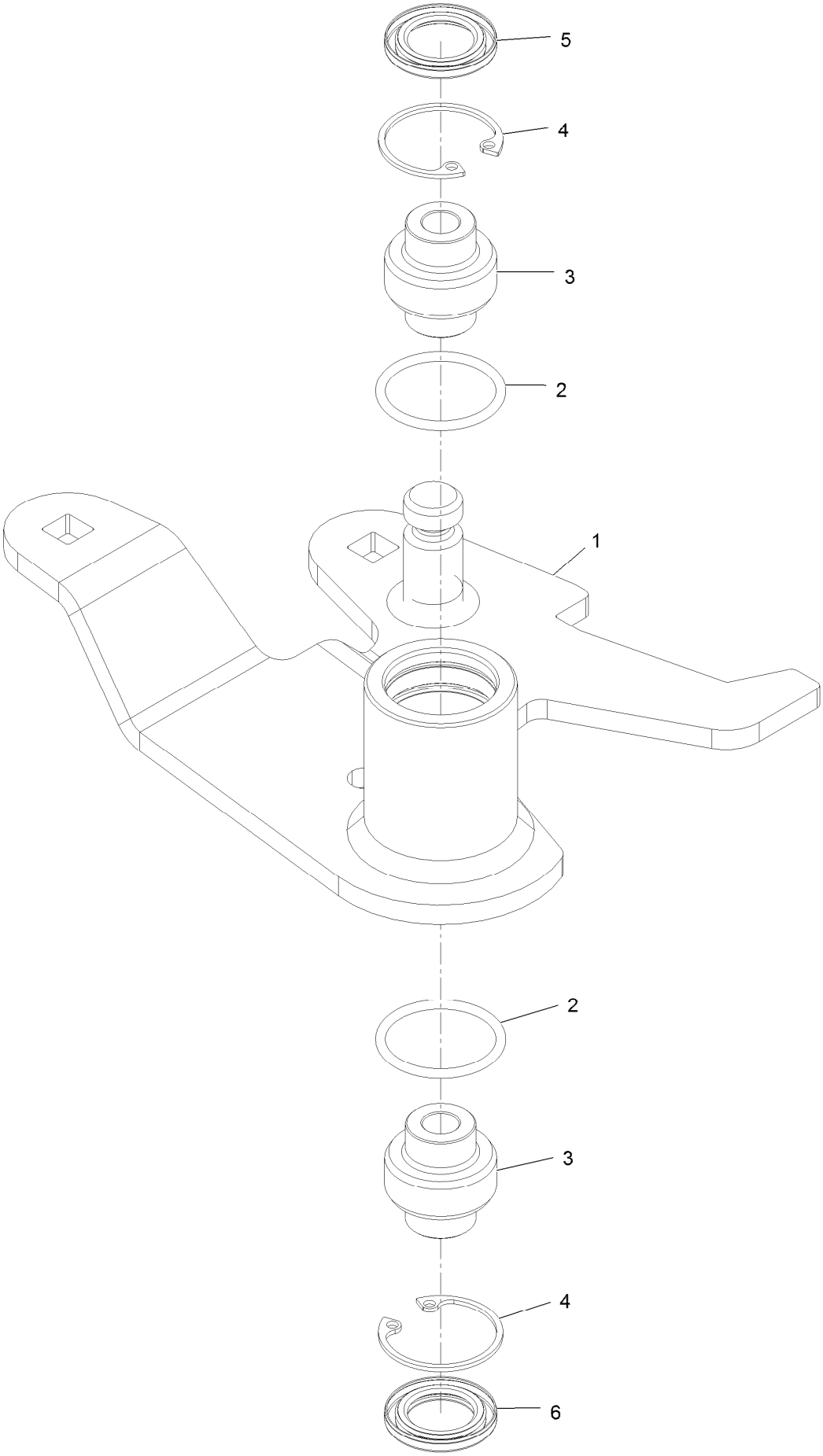

Idler Assembly No. 126-9438 (continued)

Ref.	Part Number	Qty.	Description
1		1	ASM-Idler Arm, 96Rd [red] ●
2	106-7159	2	O-Ring
3	103-3504	2	Bearing-Spherical
4	32120-10	2	Ring-Snap
5	103-3506	1	Seal-Lip, Single
6	103-3505	1	Seal-Lip, Double

● Not serviced separately

Folding Deck Hydraulic Assembly

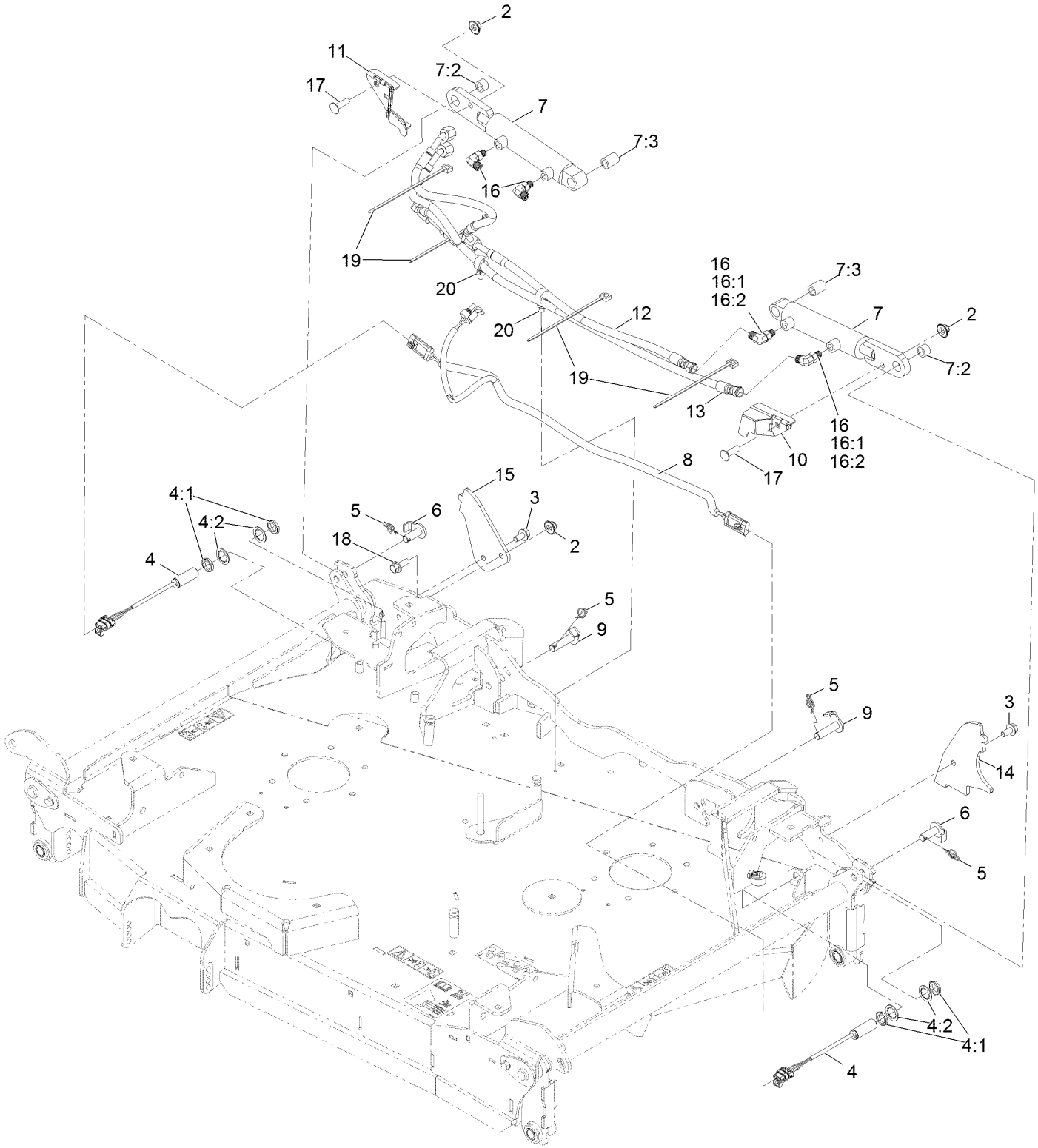

Folding Deck Hydraulic Assembly (continued)

Ref.	Part Number	Qty.	Description
2	109-6658	3	Nut-Nyloc 3/8-16 Flg
3	110-9380	2	Screw-HWH
4	115-5300	2	Proximity Switch ASM
4:1	117-3207	2	Nut-Hex
4:2	117-3208	2	Washer-Lock, Internal Tooth
5	126-8417	4	Pin-Cotter, Locking
6	126-8448	2	Pin-Cylinder
7	126-9000	2	Deck Fold Cylinder ASM
7:2	126-8439	1	Bushing
7:3	126-8440	1	Bushing
8	126-9372	1	Harness-Wire
9	126-9403	2	Pin-Base, CYL
10	135-3774	1	ASM-Prox Target, LH
11	135-3775	1	ASM-Prox Target, RH
12	135-1760	1	Hose ASM
13	135-1761	1	Hose ASM
14	135-2628-01	1	Bracket-Deck Stop, LH
15	135-2629-01	1	Bracket-Deck Stop, RH
16	340-132	4	Fitting-Elbow, 90 DEG
16:1	237-78	1	O-Ring
16:2	237-21	1	O-Ring
17	3231-28	2	Bolt-Carriage 3/8-16 X 1 1/4
18	3234-42	1	Screw HHF 3/8-16 X 1
19	3290-378	4	Tie-Cable
20	32180-030	4	Clip-Tie

Center Deck Guard Assembly

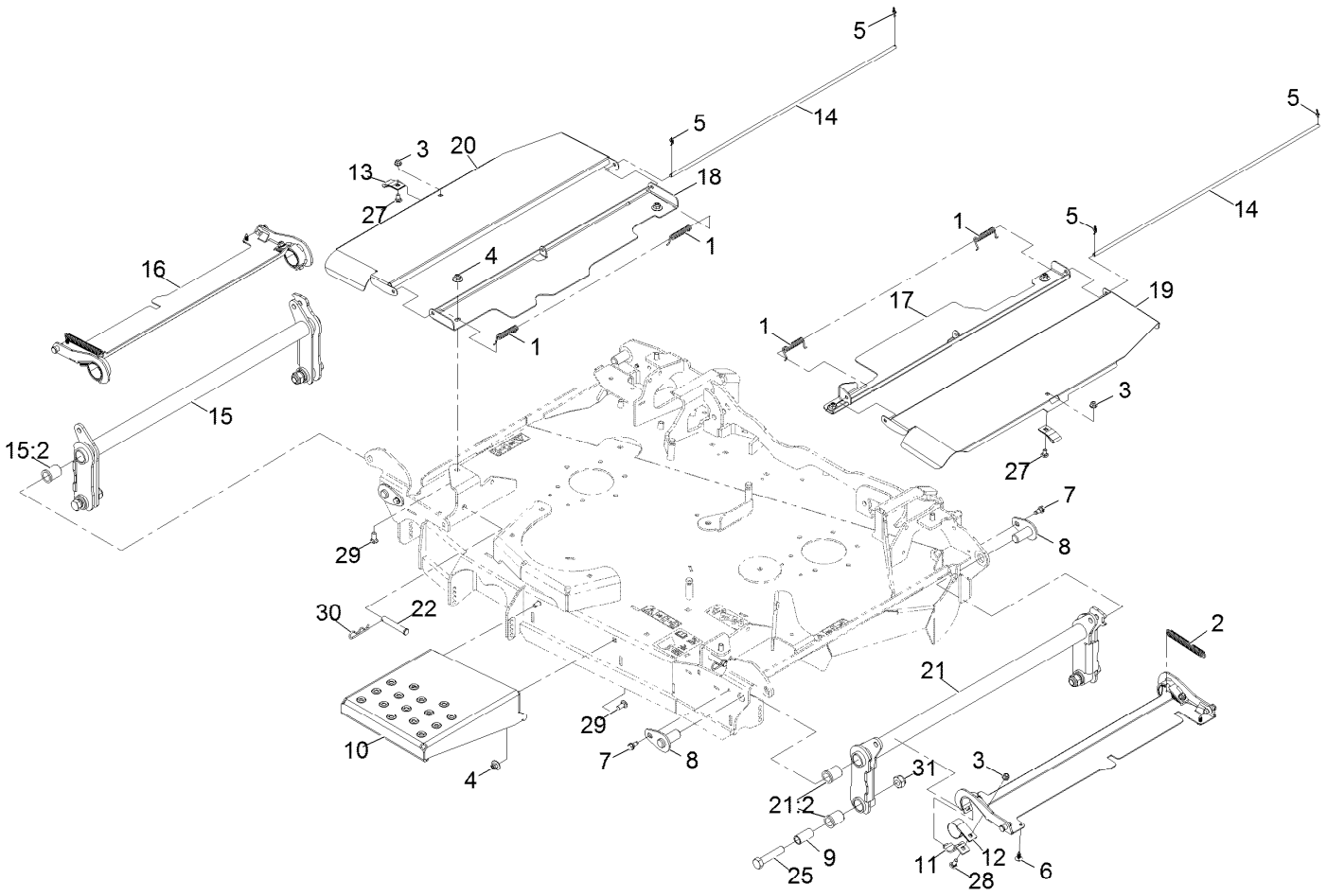

Center Deck Guard Assembly (continued)

Ref.	Part Number	Qty.	Description
1	99-5293	4	Spring-Torsion
2	103-4813	2	Spring
3	104-8300	6	Nut-HF, NI
4	109-6658	6	Nut-Flange, NI
5	116-6639	4	Pin-Cotter, Locking
6	117-2382	4	Plug-Plastic
7	126-4424	4	Screw-Shoulder
8	126-9411	4	Pin-Deck
9	135-5125	4	Bushing-Float, Deck
10	126-9745-03	1	Panel-Step
11	126-9764	4	Plate-Retainer, Bearing
12	135-0584	4	Strap-Bearing, Nylon
13	135-0608	2	Bearing-Strap, Nylon
14	135-1023	2	Cover-Rod, Pivot
15	135-1046	1	RH Fold Arm ASM
15:2	135-1841	4	Bushing-Flanged
16	135-2630-01	2	Cover-Wing
17	135-2651-01	1	Shield-Center, LH
18	135-2652-01	1	Shield-Center, RH
19	135-1839-03	1	Panel-Shield Hinge, LH
20	135-1840-03	1	Panel-Shield Hinge, RH
21	135-1844	1	LH Fold Arm ASM
21:2	135-1841	4	Bushing-Flanged
22	283-55	2	Pin-Clevis
25	327-9	4	Screw-HH
27	3230-15	2	Screw-CARR
28	3230-16	4	Screw-CARR
29	3231-12	6	Bolt-CARR
30	3290-355	2	Pin-Hair
31	3296-61	4	Nut-Lock

Center Deck Spindle, Blade and Baffle Assembly

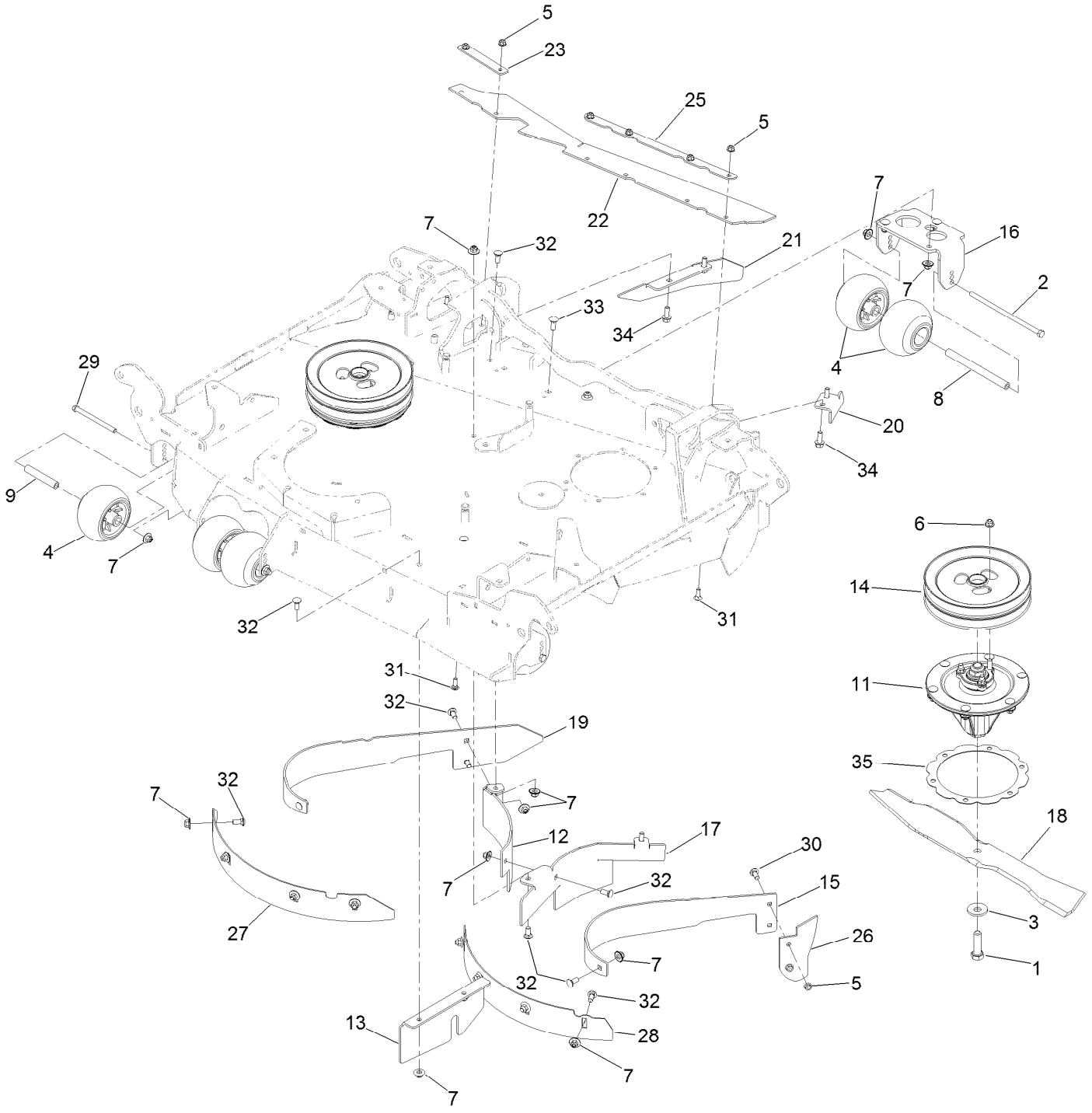

Center Deck Spindle, Blade and Baffle Assembly (continued)

Ref.	Part Number	Qty.	Description
1	51-4060	2	Screw-Blade
2	99-7203	4	Screw-HH
3	103-0865	2	Washer-Blade Bolt, Heavy
4	103-8415	9	Roller-Anti-Scalp
5	104-8300	8	Nut-HF, NI
6	104-8301	6	Nut-HF, NI
7	109-6658	38	Nut-Flange, NI
8	126-6115	4	Spacer-Wheel
9	126-7140	1	Spacer-Wheel, Short
11	127-0560	2	Spindle ASM
12	135-0601-01	1	Baffle-Center, Rear (RH)
13	135-0603-01	1	Plate-Block, Front
14	135-0746	2	Sheave-Double
15	135-0792-01	1	Baffle-Dogleg, Center (LH)
16	135-1036-01	1	Bracket-Antiscalp, Rear
17	135-1827-01	1	Baffle-Center
18	135-2446	2	Blade-Mulch, 24.5In
19	135-2451-01	1	Baffle-Dogleg, Center (RH)
20	135-2452-01	1	Baffle-Breaker
21	135-2453-01	1	Plate-Fin, Discharge
22	135-2618	1	Flap-Discharge
23	135-2455-03	1	Support-Flap, LH
25	135-2457-03	1	Support-Flap, LH
26	135-2458	1	Guard-Discharge
27	135-2459-01	1	Baffle-Depth, LH
28	135-2460-01	1	Baffle-Depth, RH
29	323-38	1	Screw-HH
30	3230-22	2	Screw-CARR
31	3230-16	6	Screw-CARR
32	3231-12	18	Bolt-CARR
33	3231-2	3	Bolt-CARR
34	3234-11	6	Screw-HHF
35	135-2639	2	Ring-Spacer, Housing

Spindle Assembly No. 127-0560

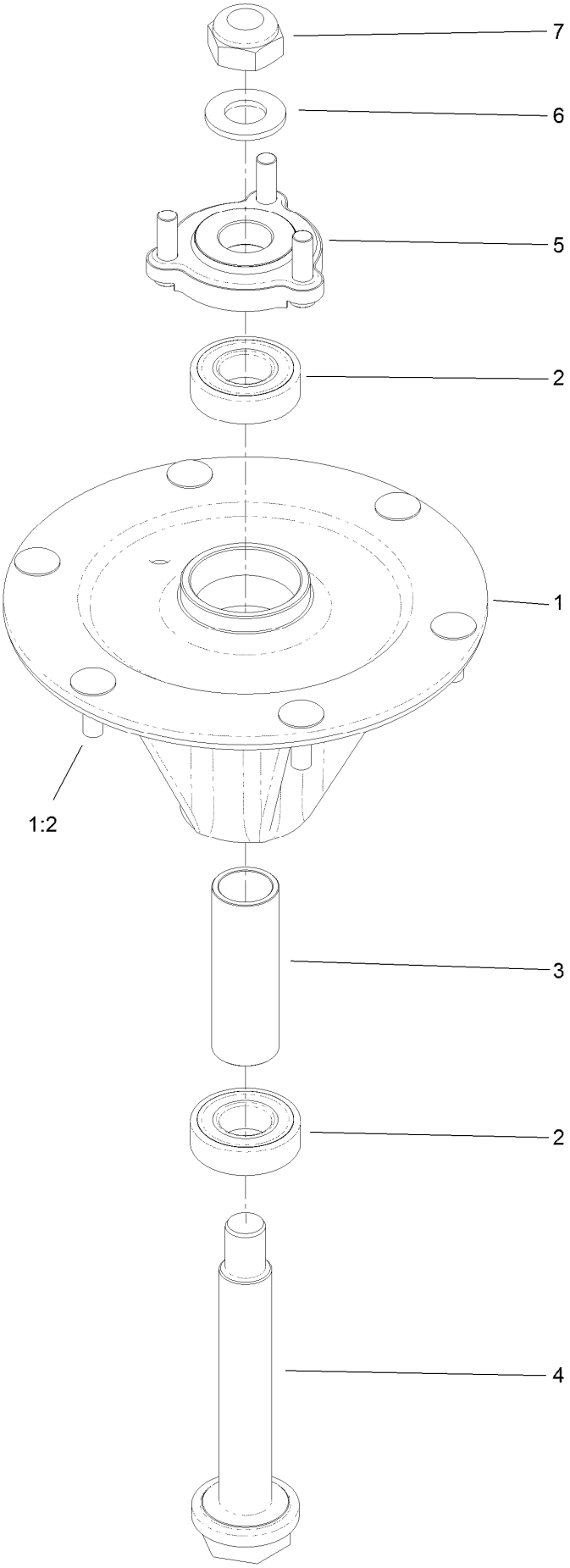

Spindle Assembly No. 127-0560 (continued)

Ref.	Part Number	Qty.	Description
1		1	Spindle Housing ASM W/Studs ●
1:2	114-8195	6	Bolt-Neck, Ribbed
2	116-0720	2	Bearing-Ball
3	127-0554	1	Spacer-Bearing
4	127-0556	1	Shaft-Spindle, Ball Bearing
5	127-0557	1	Hub-Spindle (W/Studs)
6	92-5836	1	Washer
7	3296-67	1	Nut-Lock, NI

● Not serviced separately

RH Wing Deck Assembly

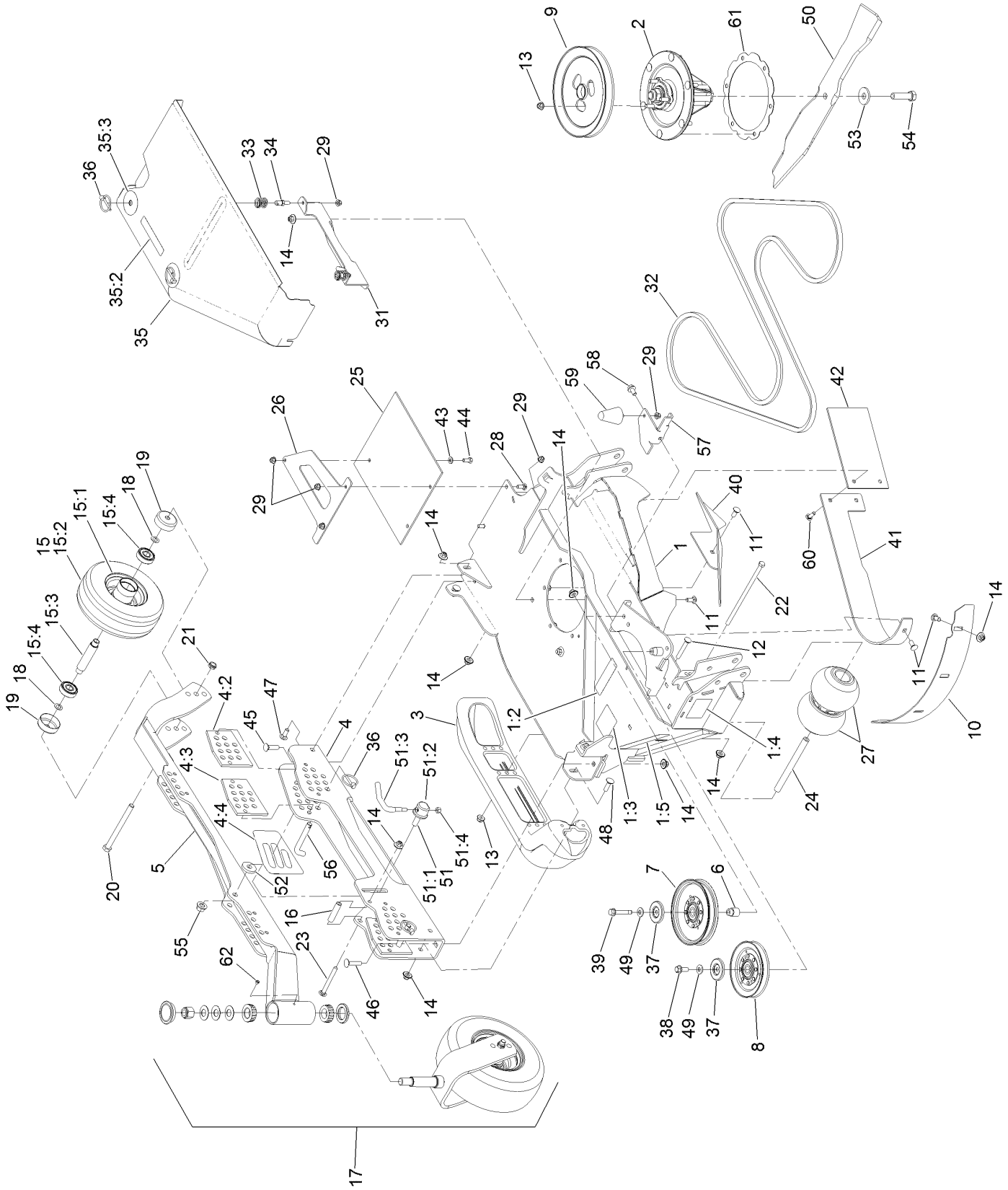

RH Wing Deck Assembly (continued)

Ref.	Part Number	Qty.	Description
1	135-0718	1	RH Wing Deck Decal ASM
1:2	112-9028	1	Decal-Cover, Missing
1:3	135-0664	1	Decal-Danger, Thrown Object
1:4	135-0670	1	Decal-Warning, Pinch Point
1:5	136-9042	1	Decal
2	127-0560	1	Spindle ASM
3	112-1479	1	Skid-Bumper, Deck
4	135-5595	1	RH HOC Channel ASM
4:2	135-2422	2	Plate-Guide, HOC (LH)
4:3	135-2423	2	Plate-Guide, HOC (RH)
4:4	126-8760	2	Decal-HOC, RH
5	135-3788-01	1	Tube-HOC, RH
6	1-633456	1	Bushing, Idler
7	126-7685	1	Idler-Pulley
8	126-2960	1	Idler-V
9	135-0745-03	1	Sheave-Single
10	135-2460-01	1	Baffle-Depth, RH
11	3231-12	8	Bolt-CARR
12	3231-31	2	Screw-CARR
13	104-8301	5	Nut-HF, NI
14	109-6658	23	Nut-Flange, NI
15		1	Wheel And Tire ASM ●
15:1	135-2646	1	Wheel
15:2	112-7065	1	Tire
15:3	126-7904	1	Axle-Caster
15:4	116-4004	2	Bearing
16	135-2424	1	Spacer
17		1	Caster Wheel ASM ●
18	36-4780	2	Washer-Plain
19	103-2768	2	Guard-Seal
20	325-20	1	Screw-HH
21	3296-45	1	Nut-Hex
22	99-7203	1	Screw-HH
23	3231-11	1	Screw-CARR
24	126-6115	1	Spacer-Wheel
25	135-2068	1	Guard-Tire
26	135-2067-03	1	Support-Flap, RH
27	103-8415	2	Roller-Anti-Scalp
28	3230-16	2	Screw-CARR
29	104-8300	8	Nut-HF, NI
31	135-2653-03	1	Bracket-Shield Mount, Outer
32	126-6447	1	Belt-V
33	126-1503	2	Spring
34	126-1504	2	Pin-Spring
35	135-1816	1	RH Wing Shield ASM
35:2	93-6687	1	Decal-No Step
35:3	135-3165	2	Decal-Cover, Scratch
36	92-1298	4	Pin-Lynch
37	126-8043	2	Shield-Dust
38	3234-42	1	Screw-HHF
39	126-2956	1	Screw-HHF
40	135-2448-01	1	Baffle-Deflect, RH
41	135-0795-01	1	Baffle-Dogleg, RH
42	135-0091	1	Flap-Rubber
43	3256-23	1	Washer-Plain
44	322-3	1	Screw-HH
45	3231-4	1	Screw-CARR
46	3231-5	1	Screw-CARR
47	3231-2	3	Bolt-CARR
48	3231-25	1	Bolt-CARR
49	98-5975	2	Washer-Belleville
50	135-2446	1	Blade-Mulch, 24.5In
51	107-1664	1	Lever ASM
51:1	106-3239	1	Screw-Lock
51:2	107-1644	1	Cap-Lock
51:3	106-3241	1	Lever-Lock
51:4	3296-29	1	Nut-Lock, NI
52	30-8770	1	Washer
53	103-0865	1	Washer-Blade Bolt, Heavy
54	51-4060	1	Screw-Blade
55	99-5107	1	Nut-Lock
56	135-2073	2	Pin-HOC
57	135-2611-01	1	Bracket-Retainer, Cover
58	110-9380	1	Screw-HWH
59	114-1925	1	Bumper-Rubber
60	3230-22	2	Screw-CARR
61	135-2639	1	Ring-Spacer, Housing
62	1-811010	1	Plug

● Not serviced separately

Caster Fork and Wheel Assembly

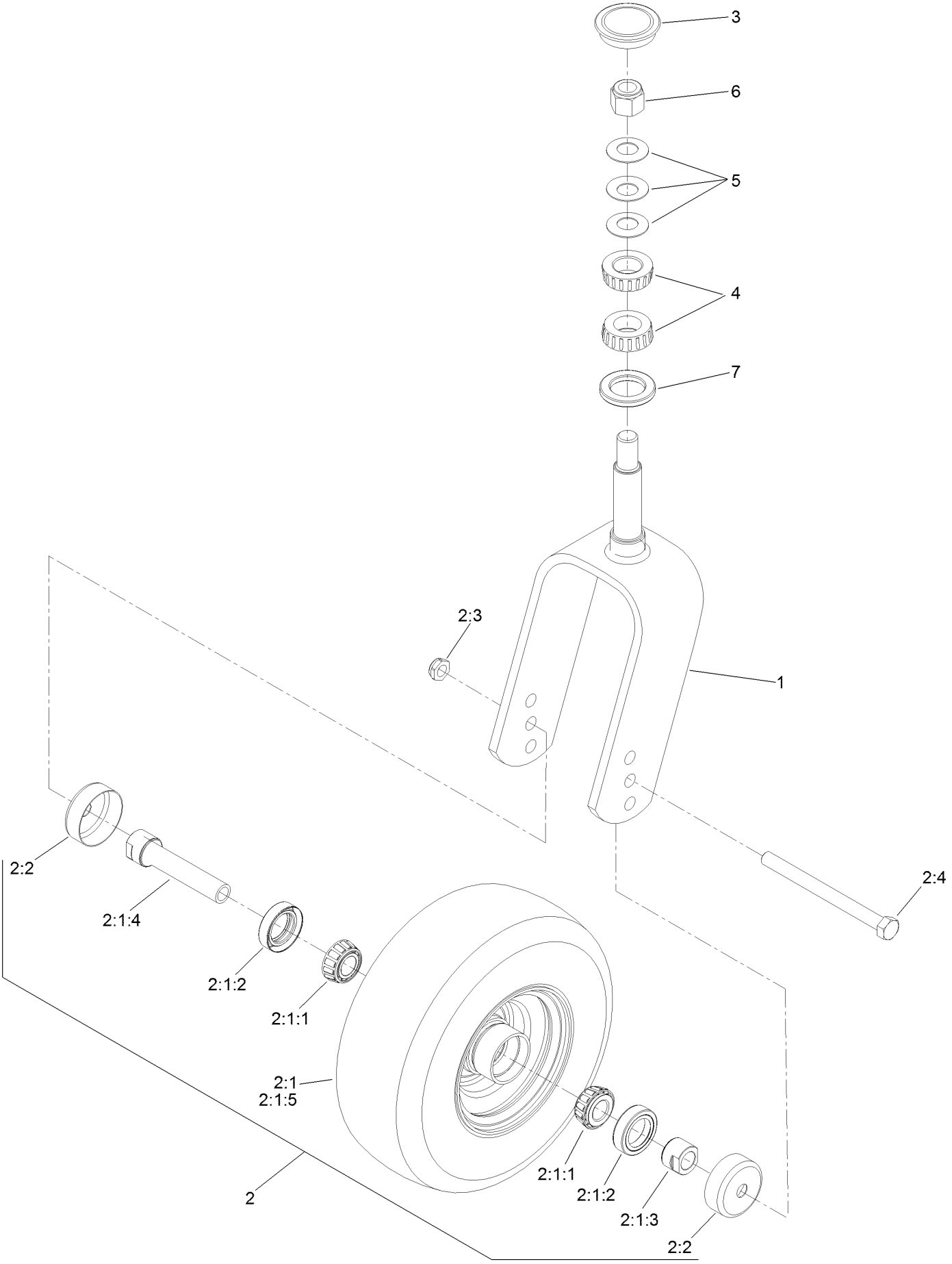

Caster Fork and Wheel Assembly (continued)

Ref.	Part Number	Qty.	Description
1	135-3794-01	1	Fork-Caster
2	130-4558	1	Wheel/Tire And Bearing ASM
2:1		1	Wheel And Bearing ASM ●
2:1:1	1-633585	2	Bearing-Cone, Taper
2:1:2	103-0063	2	Seal-Caster
2:1:3	103-3051	1	Spacer-Nut ■
2:1:4	126-5359	1	Caster Axle ASM
2:1:5	130-4563	1	Wheel And Tire ASM
2:2	103-2768	2	Guard-Seal
2:3	3296-45	1	Nut-Hex
2:4	325-20	1	Screw-HH
3	103-4882	1	Cap-Grease
4	1-543509	2	Bearing-Roller, Tapered
5	1-633508	3	Washer-Bellville
6	3296-51	1	Nut-Lock, NI
7	1-543511	1	Seal-Grease

● Not serviced separately
■ Use Pro-Lock, Nut Type (P/N 1-840022, .5ml tube) on spacer nut

LH Wing Deck Assembly

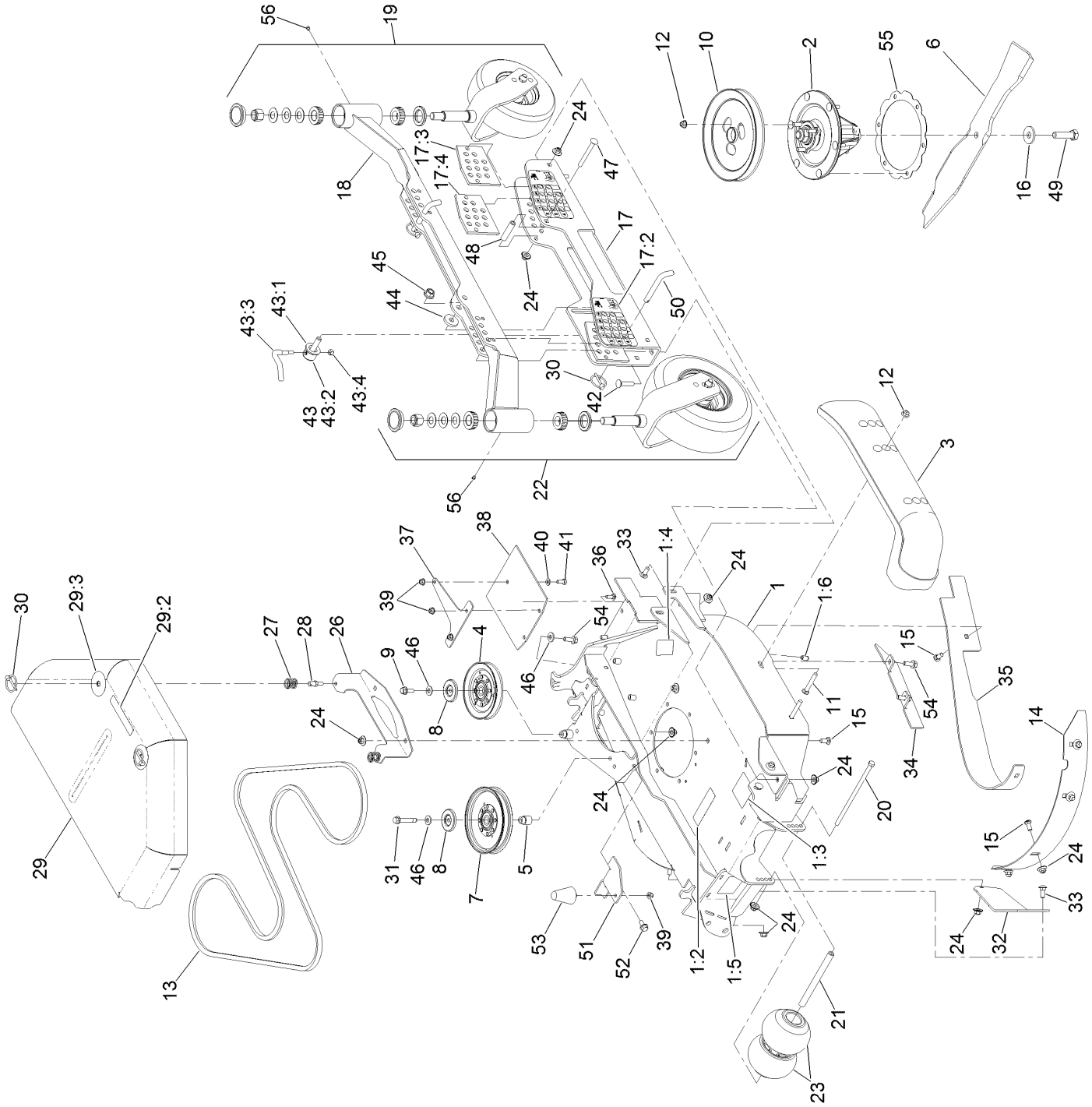

LH Wing Deck Assembly (continued)

Ref.	Part Number	Qty.	Description
1	135-0722	1	LH Wing Deck Decal ASM
1:2	112-9028	1	Decal-Cover, Missing
1:3	135-0664	1	Decal-Danger, Thrown Object
1:4	93-7818	1	Decal-Torque, Blade Bolt
1:5	135-0670	1	Decal-Warning, Pinch Point
1:6	32148-10	3	Nut-Clinch
2	127-0560	1	Spindle ASM
3	112-1479	1	Skid-Bumper, Deck
4	126-2960	1	Idler-V
5	1-633456	1	Bushing, Idler
6	135-2446	1	Blade-Mulch, 24.5In
7	126-7685	1	Idler-Pulley
8	126-8043	2	Shield-Dust
9	3234-42	1	Screw-HHF
10	135-0745-03	1	Sheave-Single
11	3231-31	2	Screw-CARR
12	104-8301	5	Nut-HF, NI
13	126-6442	1	Belt-V
14	135-2459-01	1	Baffle-Depth, LH
15	3231-12	8	Bolt-CARR
16	103-0865	1	Washer-Blade Bolt, Heavy
17	135-2433	1	LH HOC Channel ASM
17:2	126-8597	2	Decal-HOC, LH
17:3	135-2422	2	Plate-Guide, HOC (LH)
17:4	135-2423	2	Plate-Guide, HOC (RH)
18	135-2436-01	1	Tube-HOC, LH
19		1	Rear Caster Wheel ASM ●
20	99-7203	1	Screw-HH
21	126-6115	1	Spacer-Wheel
22		1	Caster Wheel ASM ●
23	103-8415	2	Roller-Anti-Scalp
24	109-6658	25	Nut-Flange, NI
26	135-2653-03	1	Bracket-Shield Mount, Outer
27	126-1503	2	Spring
28	126-1504	2	Pin-Spring
29	135-1815	1	LH Wing Shield ASM
29:2	93-6687	1	Decal-No Step
29:3	135-3165	2	Decal-Cover, Scratch
30	92-1298	4	Pin-Lynch
31	126-2956	1	Screw-HHF
32	126-9757-01	1	Plate-Fill
33	3231-2	6	Bolt-CARR
34	135-1824-01	1	Fin-Baffle, Discharge Wing (LH)
35	135-0794-01	1	Baffle-Dogleg, Center (RH)
36	3230-16	2	Screw-CARR
37	135-0618-03	1	Support-Flap, LH
38	135-1849	1	Guard-Tire, LH
39	104-8300	4	Nut-HF, NI
40	3256-23	1	Washer-Plain
41	322-3	1	Screw-HH
42	3231-5	2	Screw-CARR
43	107-1664	1	Lever ASM
43:1	106-3239	1	Screw-Lock
43:2	107-1644	1	Cap-Lock
43:3	106-3241	1	Lever-Lock
43:4	3296-29	1	Nut-Lock, NI
44	30-8770	1	Washer
45	99-5107	1	Nut-Lock
46	98-5975	5	Washer-Belleville
47	3231-11	1	Screw-CARR
48	135-2424	1	Spacer
49	51-4060	1	Screw-Blade
50	135-2073	2	Pin-HOC
51	135-2611-01	1	Bracket-Retainer, Cover
52	110-9380	1	Screw-HWH
53	114-1925	1	Bumper-Rubber
54	3234-11	3	Screw-HHF
55	135-2639	1	Ring-Spacer, Housing
56	1-811010	2	Plug

● Not serviced separately

Rear Caster Wheel Assembly

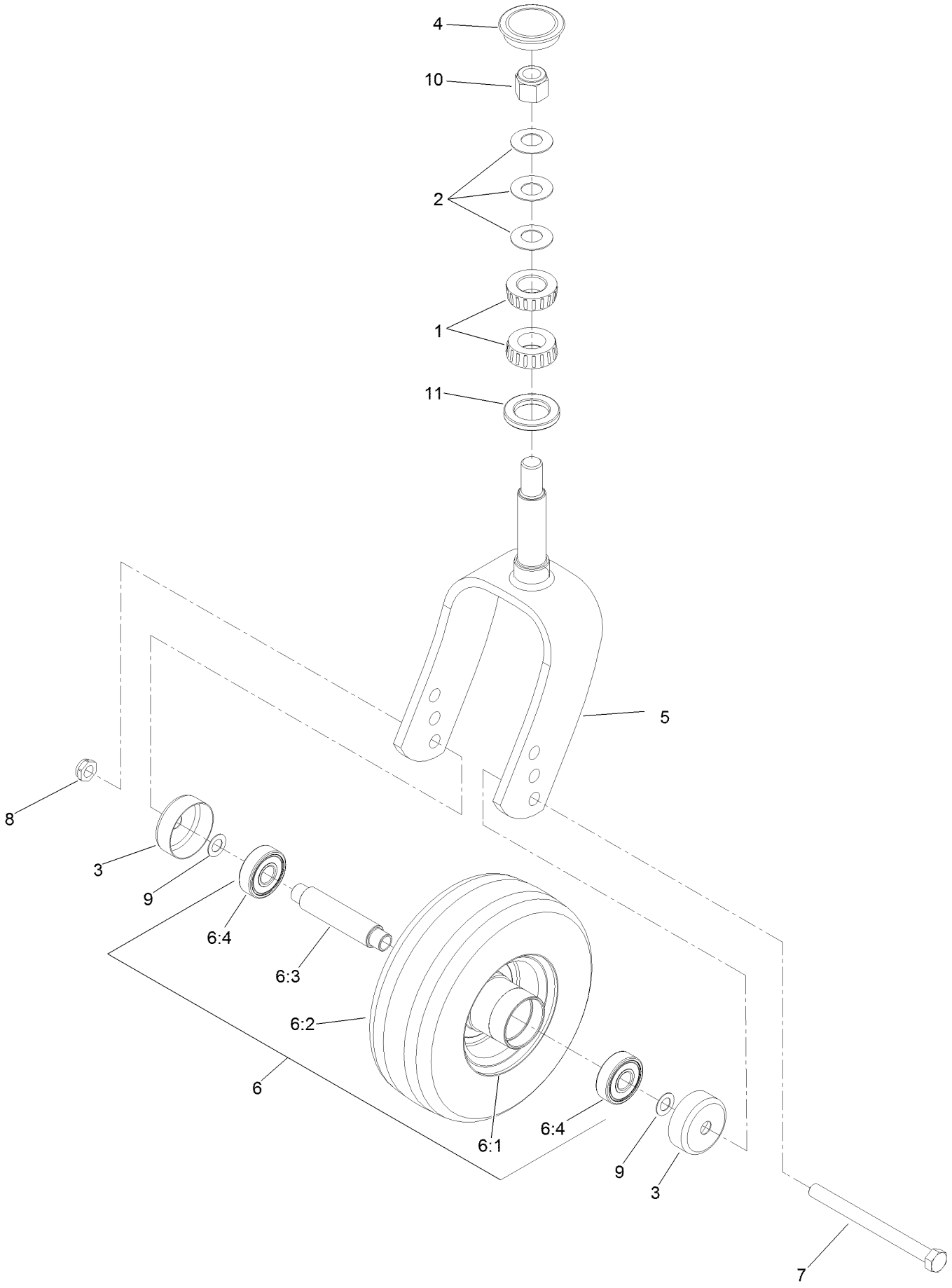

Rear Caster Wheel Assembly (continued)

Ref.	Part Number	Qty.	Description
1	1-543509	2	Bearing-Roller, Tapered
2	1-633508	3	Washer-Bellville
3	103-2768	2	Guard-Seal
4	103-4882	1	Cap-Grease
5	135-3793-01	1	Fork-Caster
6		1	Wheel And Tire ASM ●
6:1	135-2646	1	Wheel
6:2	112-7065	1	Tire
6:3	126-7904	1	Axle-Caster
6:4	116-4004	2	Bearing
7	325-20	1	Screw-HH
8	3296-45	1	Nut-Hex
9	36-4780	2	Washer-Plain
10	3296-51	1	Nut-Lock, NI
11	1-543511	1	Seal-Grease

● Not serviced separately

Discharge Tunnel Assembly

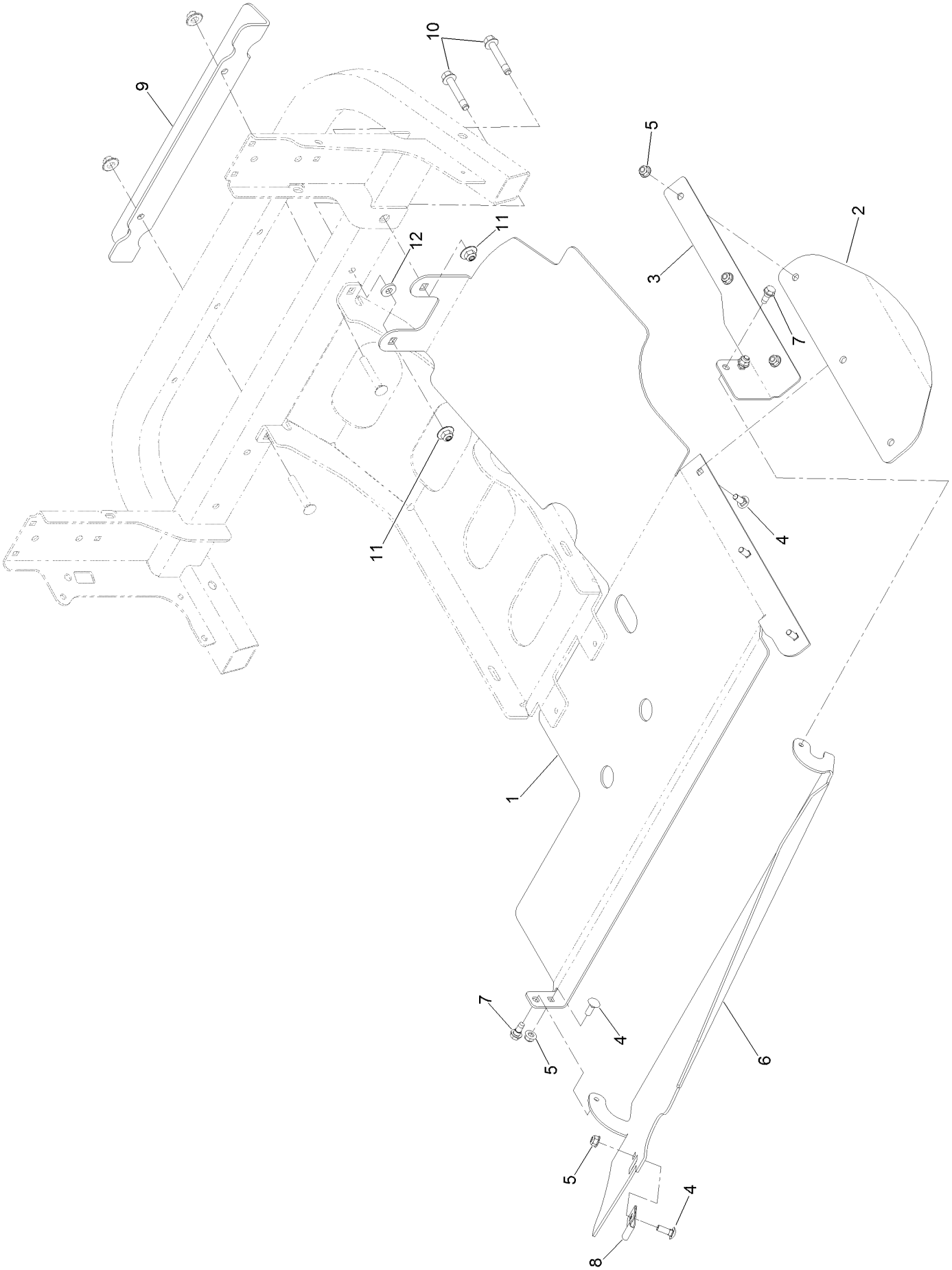

Discharge Tunnel Assembly (continued)

Ref.	Part Number	Qty.	Description
1	135-2089-03	1	Plate-Discharge
2	135-0050	1	Flap-Rubber
3	135-2090-03	1	Bracket-Flap, LH
4	3230-16	6	Screw-CARR
5	104-8300	6	Nut-HF, NI
6	135-2617-03	1	Panel-Discharge
7	126-4424	2	Screw-Shoulder
8	135-0608	1	Bearing-Strap, Nylon
9	135-2092-03	1	Bracket-Tie Down
10	126-2956	2	Screw-HHF
11	109-6658	2	Nut-Flange, NI
12	43-0940	1	Spacer

Cylinder Block Assembly

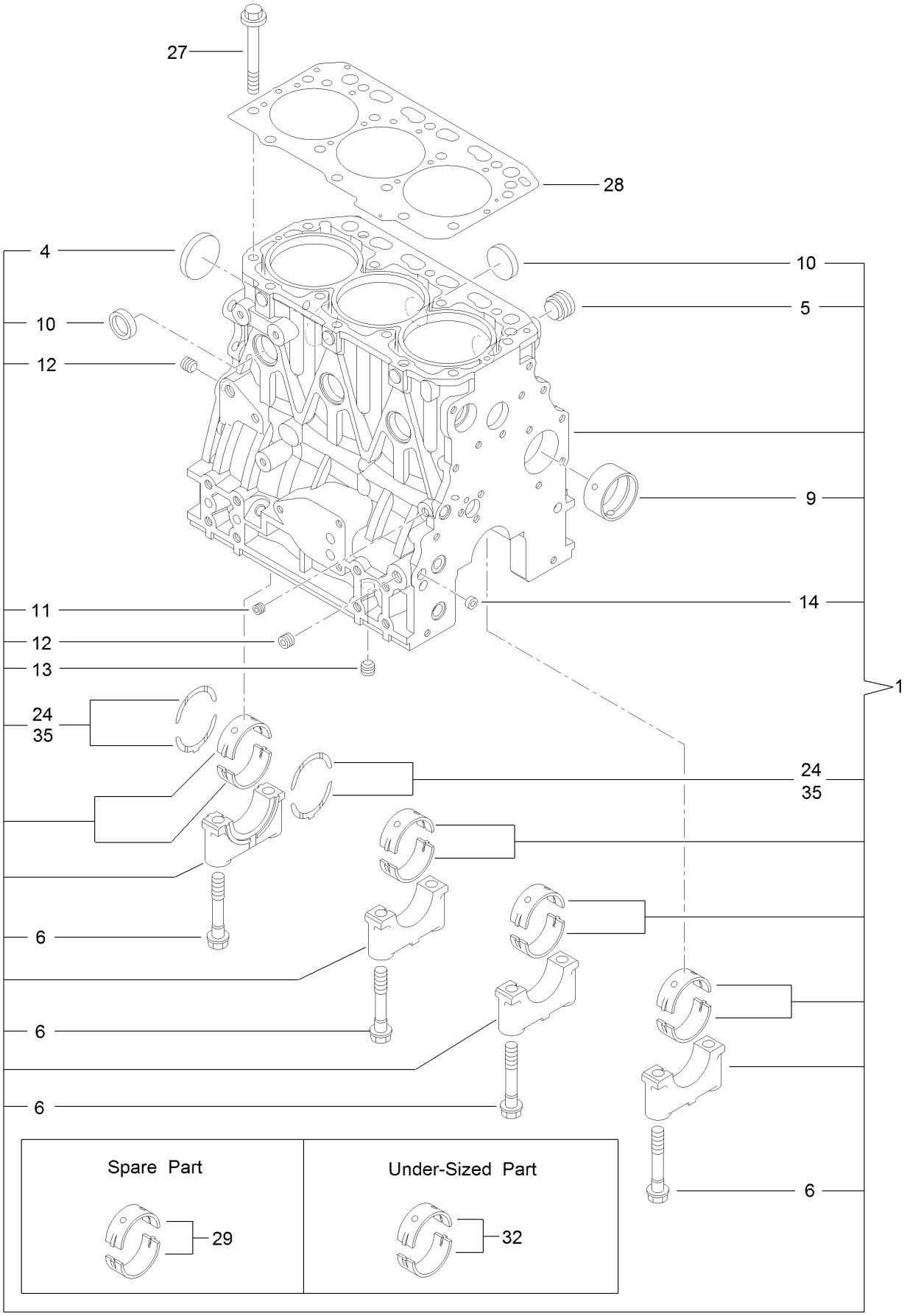

Cylinder Block Assembly (continued)

Ref.	Part Number	Qty.	Description
1	127-4717	1	Cylinder Block ASM
4	125-6980	1	Plug
5	125-7170	1	Plug
6	125-7007	8	Bolt
9	125-7108	1	Bushing
10	125-7239	6	Plug
11	125-6969	1	Plug
12	125-6973	2	Plug
13	125-6973	1	Plug
14	125-7237	1	Plug
24	125-7010	2	Metal-Thrust
27	125-7006	14	Bolt
28	127-4716	1	Head Gasket ASM
29	125-6981	4	Metal-Main
32	125-7009	4	Metal-Main (0.25)
35	125-7011	1	Metal-Thrust (0.25)

Gear Housing Assembly

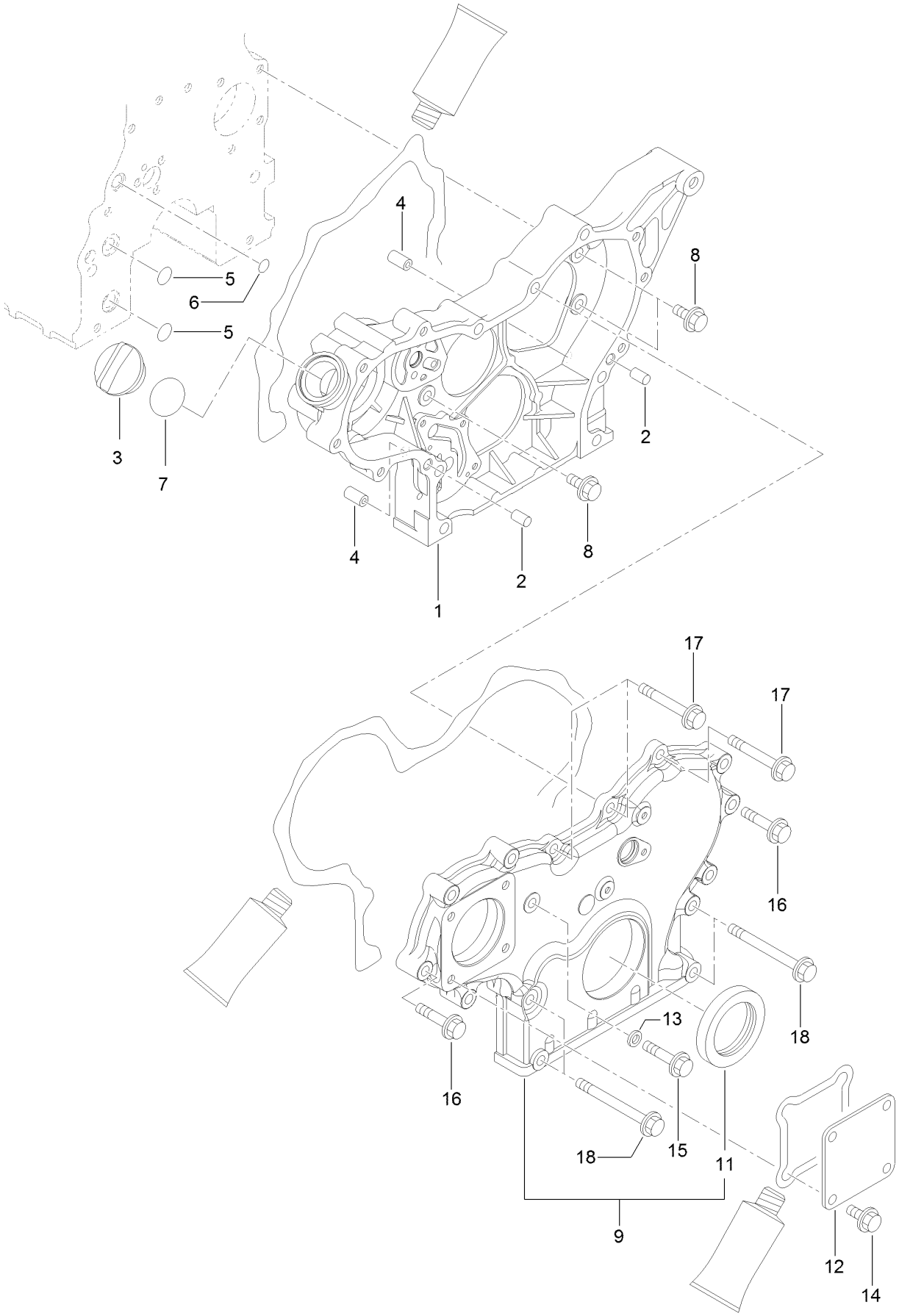

Gear Housing Assembly (continued)

Ref.	Part Number	Qty.	Description
1	127-3023	1	Case-Gear
2	125-6995	2	Pin
3	125-6972	1	Cover-Filler
4	125-7107	2	Pipe
5	125-6909	2	O-Ring
6	127-2973	1	O-Ring
7	125-7197	1	O-Ring
8	100-6928	3	Bolt
9	127-3024	1	Gearcase Cover ASM
11	125-6944	1	Seal-Oil
12	125-6977	1	Cover
13	125-7174	1	Washer-Seal
14	100-6928	4	Bolt
15	125-7217	1	Bolt
16	125-7218	7	Bolt
17	125-7222	3	Bolt
18	125-7224	4	Bolt

Flywheel Housing and Oil Sump Assembly

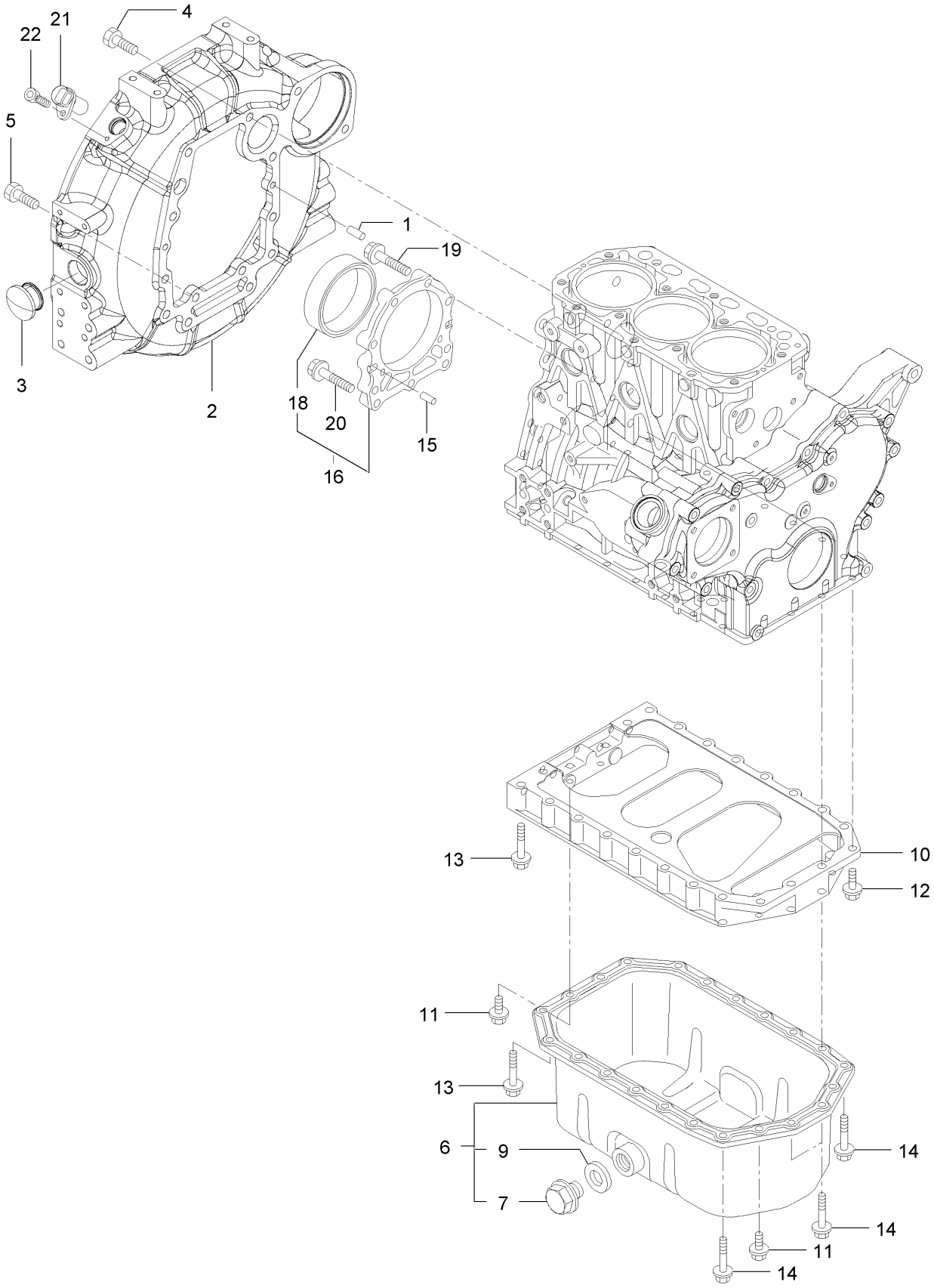

Flywheel Housing and Oil Sump Assembly (continued)

Ref.	Part Number	Qty.	Description
1	125-6995	2	Pin
2	127-4758	1	Housing-Flywheel
3	125-6910	1	Cap
4	125-7226	6	Bolt
5	125-7227	4	Bolt
6	135-4010	1	Oil Pan ASM
7	125-6912	1	Plug-Drain
9	125-7177	1	Washer-Seal
10	127-3756	1	Spacer
11	100-6928	4	Bolt
12	125-7215	2	Bolt
13	125-7219	16	Bolt
14	125-7220	4	Bolt
15	125-6995	2	Pin
16	135-4011	1	Case ASM
18	125-7106	1	Seal-Oil
19	125-7045	6	Bolt
20	125-7217	3	Bolt
21	127-3062	1	Sensor-Rev, Flywheel
22	127-3184	1	Bolt

Cylinder Head and Cover Assembly

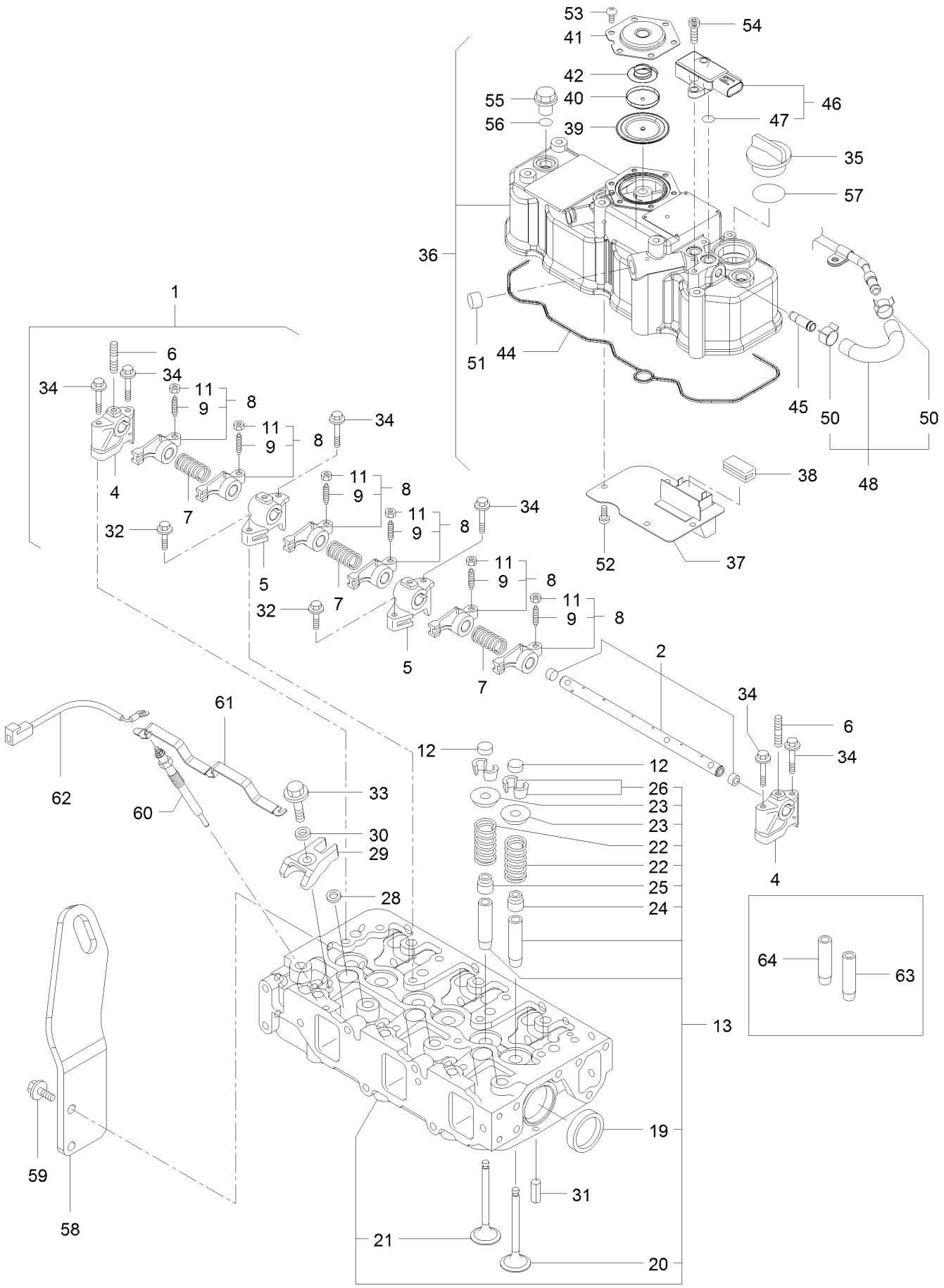

Cylinder Head and Cover Assembly (continued)

Ref.	Part Number	Qty.	Description
1	127-3757	1	Shaft ASM
2	127-3758	1	Shaft
4	127-2974	2	Support
5	127-2975	2	Support
6	135-4012	3	Bolt,Stud
7	127-2995	3	Spring
8	127-2989	6	Arm-Rocker
9	125-7013	6	Screw-Adjust, Valve
11	125-7014	6	Nut
12	127-2996	6	Cap-Valve
13	127-4720	1	Cylinder Head ASM
19	125-7240	2	Plug
20	127-2990	3	Valve
21	127-4710	3	Valve
22	127-3012	6	Spring
23	127-3013	6	Retainer-Spring
24	127-2986	3	Seal-Stem, Valve
25	127-3027	3	Seal-Stem, Valve
26	127-3186	6	Pin-Cotter
28	127-3021	3	Gasket-Injector
29	127-3028	3	Retainer-Injector
30	127-2980	3	Washer-Injector
31	125-7184	2	Pin-Spring
32	125-7215	2	Bolt
33	125-7217	3	Bolt
34	125-7220	6	Bolt
35	125-6972	1	Cover-Filler

Ref.	Part Number	Qty.	Description
36	127-4719	1	Cylinder Head Cover ASM
37	127-2988	1	Plate
38	125-7012	1	Baffle
39	125-6959	1	Diaphragm
40	125-6960	1	Plate
41	125-6961	1	Plate-Breather
42	125-6962	1	Spring-Diaphragm
44	127-3856	1	Gasket-Valve Cover
45	127-3026	1	Joint
46	127-3029	1	Sensor-Pressure
47	127-3032	2	O Ring-Sensor, Pressure
48	127-3040	1	Hose ASM
50	127-3041	2	Clip-Hose
51	125-6913	1	Plug
52	125-7186	4	Screw
53	125-7186	6	Screw
54	127-3184	2	Bolt
55	125-6974	3	Knob
56	93-0418	3	O-Ring
57	125-7197	1	O-Ring
58	127-4718	1	Lifter-Engine
59	100-6928	2	Bolt
60	127-2991	3	Plug-Glow
61	127-3768	1	Connector-Plug, Glow
62	131-2704	1	Harness-Wire
63	127-2979	3	Guide
64	127-2997	3	Guide-Valve

Suction Manifold Assembly

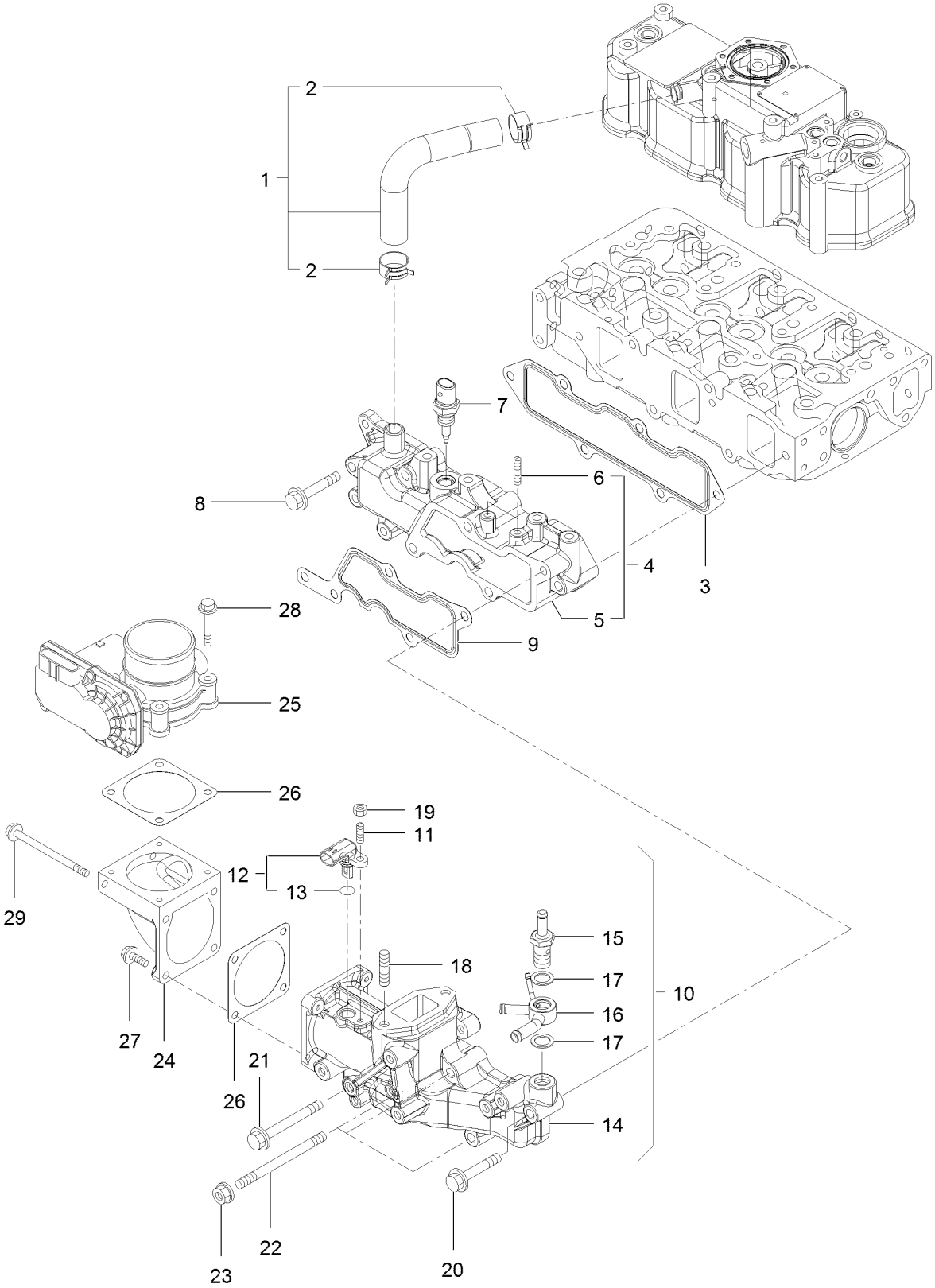

Suction Manifold Assembly (continued)

Ref.	Part Number	Qty.	Description
1	127-4704	1	Pipe
2	125-7040	2	Clip-Hose
3	127-3857	1	Gasket-Manifold, Intake
4	127-4722	1	Intake Manifold ASM
5	127-4721	1	Manifold-Intake
6	127-3180	2	Stud
7	127-3031	1	Sensor-Temp, Air
8	125-7220	3	Bolt
9	127-3034	1	Gasket-Collector
10	127-4725	1	Intake Collector ASM
11	127-4701	1	Stud
12	127-3030	1	Sensor-Temp, Air
13	127-3033	1	O-Ring
14	127-4724	1	Collector-Intake
15	127-3080	1	Joint-Hose
16	127-3081	1	Joint-Hose
17	127-3166	2	Washer-Seal
18	127-3181	2	Stud
19	127-4775	1	Nut
20	125-7220	1	Bolt
21	127-3178	1	Bolt
22	127-3182	3	Stud
23	125-7229	3	Nut
24	127-3035	1	Bend-Inlet
25	127-3036	1	Body-Throttle
26	127-3037	2	Gasket-Throttle
27	125-7209	2	Bolt
28	125-7211	4	Bolt
29	127-3177	2	Bolt

Exhaust Manifold Assembly

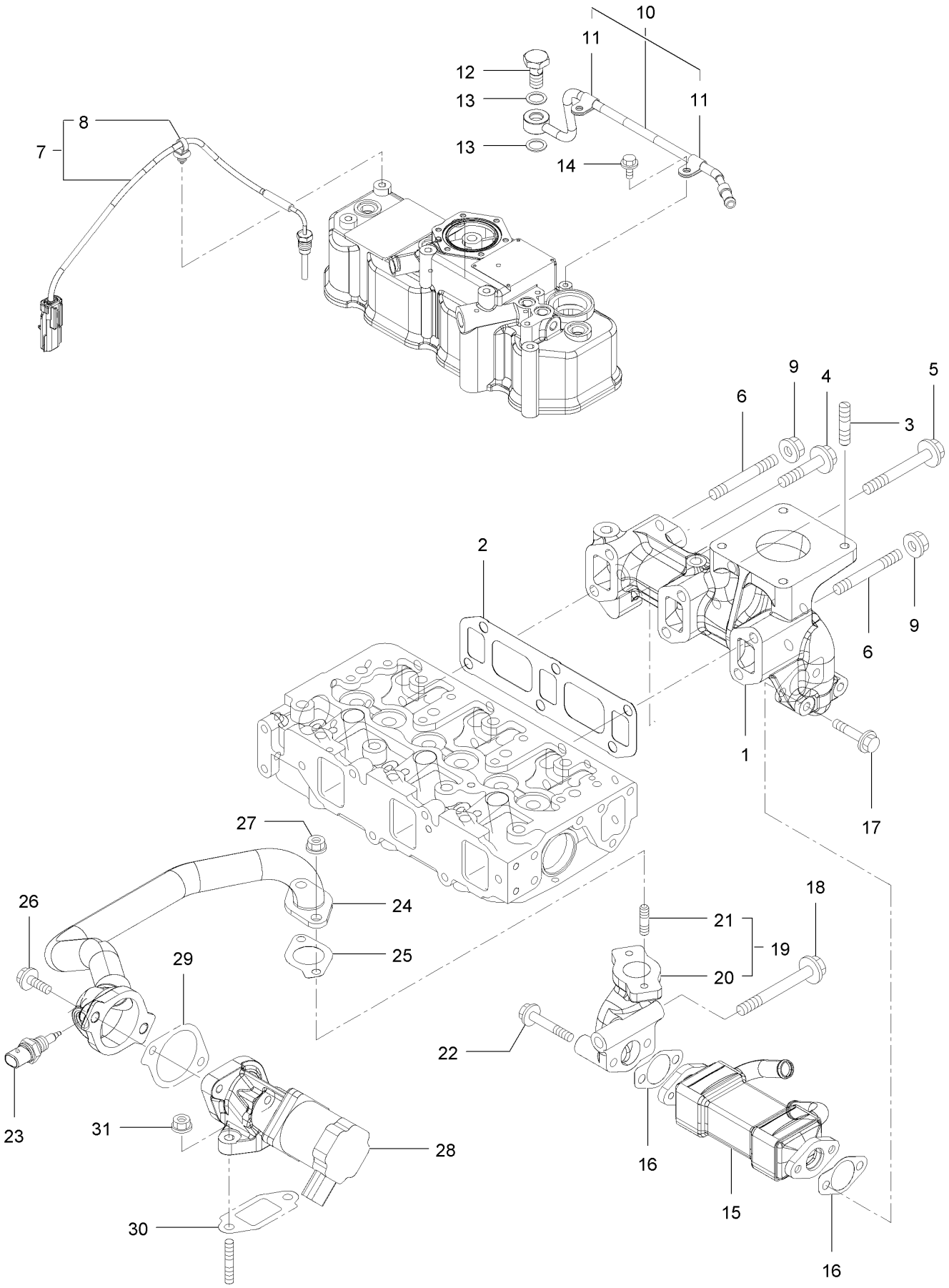

Exhaust Manifold Assembly (continued)

Ref.	Part Number	Qty.	Description
1	127-4726	1	Manifold-Exhaust
2	127-3775	1	Gasket-Manifold, Exhaust
3	127-2984	4	Stud
4	135-4013	1	Bolt
5	135-4014	3	Bolt
6	127-4756	2	Stud
7	127-4729	1	Sensor-Temp, Exhaust
8	127-3087	1	Band-Clip
9	125-7230	2	Nut
10	127-3038	1	Exhaust Pipe ASM
11	127-3173	2	Clamp
12	127-3039	1	Bolt-Joint, Pipe
13	127-3174	2	Gasket
14	125-7206	2	Bolt
15	127-3042	1	Cooler-E G R
16	127-3043	2	Gasket-Cooler, E G R
17	135-4015	2	Bolt
18	135-4016	1	Bolt
19	127-3048	1	E G R Pipe ASM
20	127-3049	1	Pipe-Out, E G R
21	125-7043	2	Stud
22	125-7220	2	Bolt
23	137-5168	1	Sensor-Gas Temp, E G R
24	127-3780	1	E G R Pipe ASM
25	127-3016	1	Gasket
26	125-7215	2	Bolt
27	125-7229	2	Nut
28	127-3781	1	Valve-E G R
29	127-3050	1	Gasket-Intake Valve, E G R
30	127-3051	1	Gasket-Out Valve, E G R
31	125-7229	2	Nut

Diesel Particulate Filter Assembly

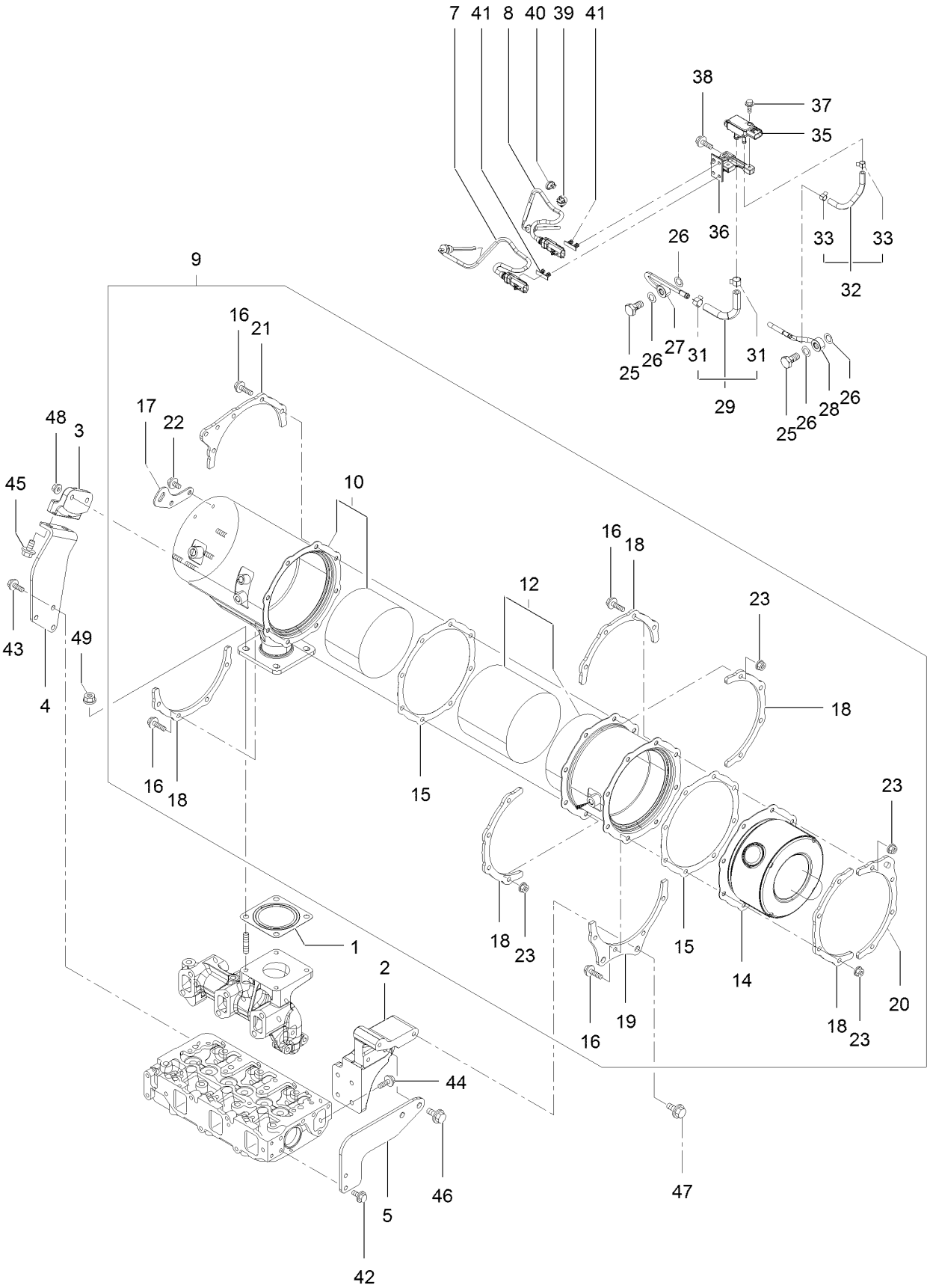

Diesel Particulate Filter Assembly (continued)

Ref.	Part Number	Qty.	Description
1	127-2987	1	Gasket-Silencer
2	127-4738	1	Stay-D P F
3	127-4739	1	Stay-D P F
4	127-4740	1	Stay-D P F
5	127-4741	1	Stay-D P F
7	127-4764	1	Sensor-Temp, Exhaust
8	127-4765	1	Sensor-Temp, Exhaust
9	127-4759	1	D P F ASM
10	127-4732	1	Case-D O C
12	127-4734	1	Case-Filter, Soot
14	127-3786	1	Silencer-D P F
15	127-3859	2	Gasket-D P F
16	127-3055	16	Bolt
17	127-3788	1	Lifter-D P F
18	127-3789	5	Stiffener-D P F, A
19	127-4735	1	Stiffener-D P F, B
20	127-3792	1	Stiffener-D P F, C
21	127-4736	1	Stiffener-D P F, C
22	125-7213	2	Bolt
23	125-7229	16	Nut
25	127-3039	2	Bolt-Joint, Pipe
26	127-3056	4	Gasket-Sensor

Ref.	Part Number	Qty.	Description
27	127-4744	1	Sensor Pipe ASM
28	127-4745	1	Sensor Pipe ASM
29	127-4747	1	Exhaust Hose ASM
31	127-3057	2	Clip-Hose
32	127-4748	1	Exhaust Hose ASM
33	127-3058	2	Clip-Hose
35	127-3060	1	Sensor-Pressure
36	127-4750	1	Bracket-Sensor
37	125-7208	2	Bolt
38	125-7595	2	Bolt
39	127-3087	1	Band-Clip
40	127-3124	1	Band
41	127-3088	2	Clip-Connnector
42	100-6928	2	Bolt
43	100-6928	3	Bolt
44	125-7594	4	Bolt
45	127-4773	2	Bolt
46	127-3179	2	Bolt
47	127-3179	2	Bolt
48	127-3179	2	Bolt
49	125-7230	4	Nut

Camshaft and Driving Gear Assembly

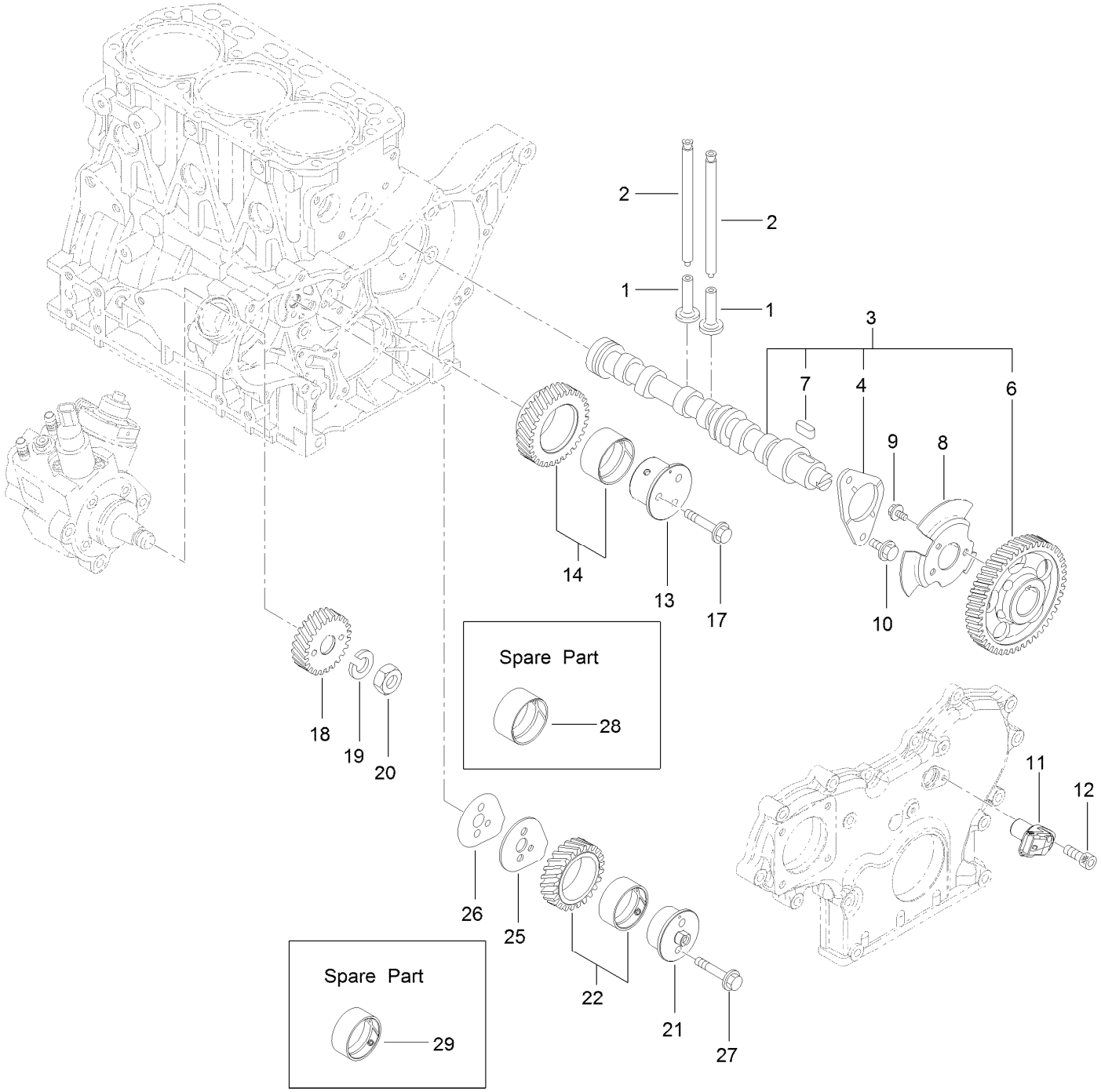

Camshaft and Driving Gear Assembly (continued)

Ref.	Part Number	Qty.	Description
1	125-7016	6	Tappet
2	125-7017	6	Rod-Push
3	127-3797	1	Camshaft ASM
4	125-7008	1	Metal-Thrust
6	127-3052	1	Gear-Camshaft
7	125-7185	1	Key
8	127-3053	1	Pulser-Camshaft
9	125-7205	3	Bolt
10	125-7213	2	Bolt
11	127-3054	1	Sensor-Rev, Gear
12	127-3184	1	Bolt
13	127-3063	1	Shaft-Idle, Gear A
14	127-3066	1	Idle Gear A ASM
17	125-7219	3	Bolt
18	127-3070	1	Gear-Pump, Supply
19	127-3167	1	Washer-Spring
20	127-3185	1	Nut-Lock
21	127-3064	1	Shaft-Idle, Gear B
22	127-3067	1	Idle Gear B ASM
25	127-3068	1	Plate-Idle, Shaft
26	127-3069	1	Gasket-Idle, Shaft B
27	125-7218	2	Bolt
28	125-6927	1	Bushing
29	127-3065	1	Bushing

Crankshaft and Piston Assembly

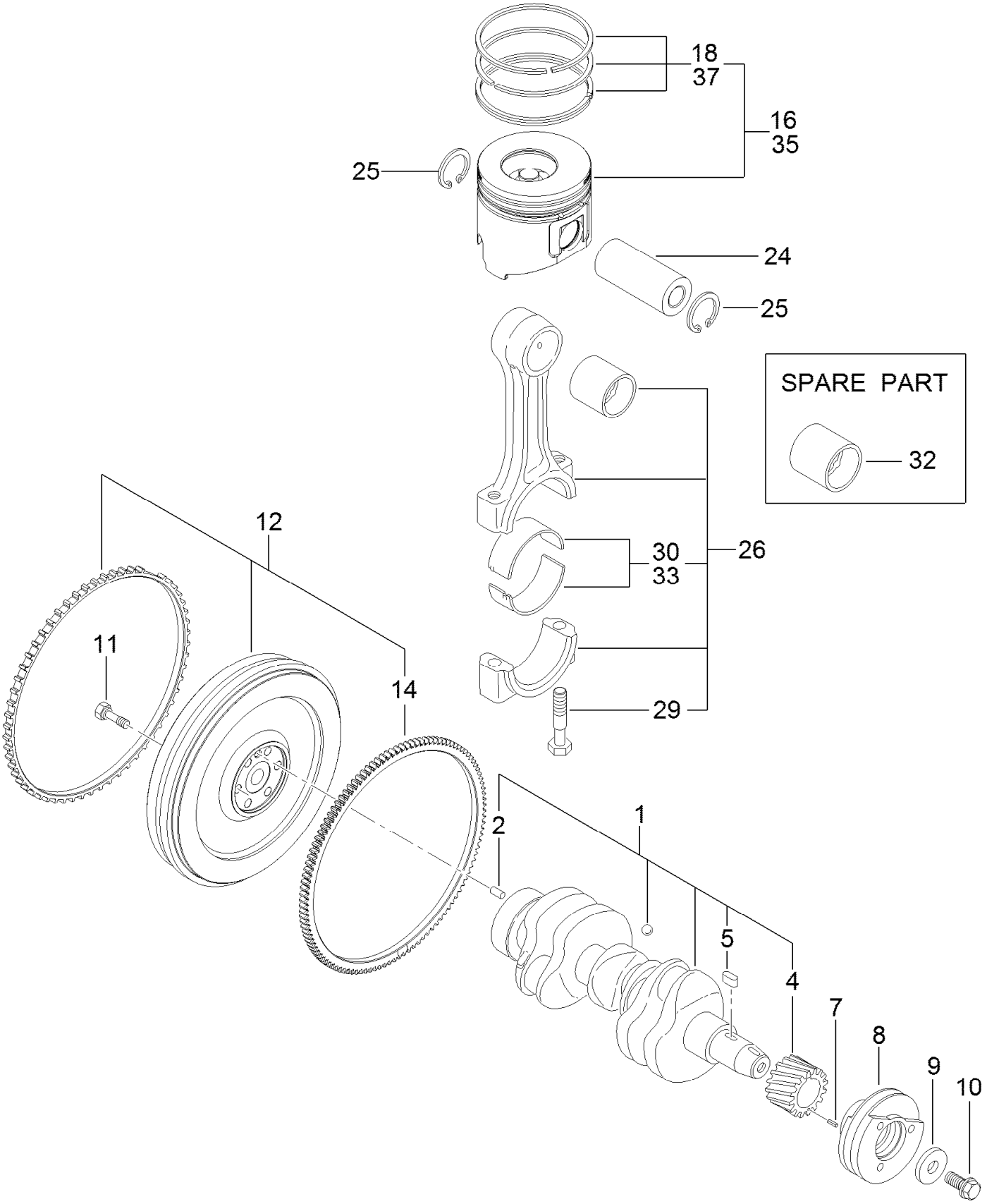

Crankshaft and Piston Assembly (continued)

Ref.	Part Number	Qty.	Description
1	127-3800	1	Crankshaft ASM
2	125-6995	1	Pin
4	125-6937	1	Gear
5	125-7185	1	Key
7	125-7182	1	Pin-Spring
8	127-3801	1	Pulley-V
9	125-7109	1	Washer
10	125-6956	1	Bolt
11	125-6951	6	Bolt
12	127-4761	1	Flywheel ASM
14	127-4703	1	Gear

Ref.	Part Number	Qty.	Description
16	127-4766	3	Piston ASM
18	127-4751	3	Piston Ring ASM
24	125-7030	3	Pin
25	125-7180	6	Ring
26	125-7242	3	Connecting Rod ASM
29	125-6955	6	Bolt
30	125-7018	3	Pin-Crank
32	125-6997	3	Pin-Piston
33	125-7019	3	Pin-Crank (.25)
35	127-4767	3	Piston ASM (0.25 O S)
37	127-4752	3	Ring Set (0.25 O S)

Oil Pump Assembly

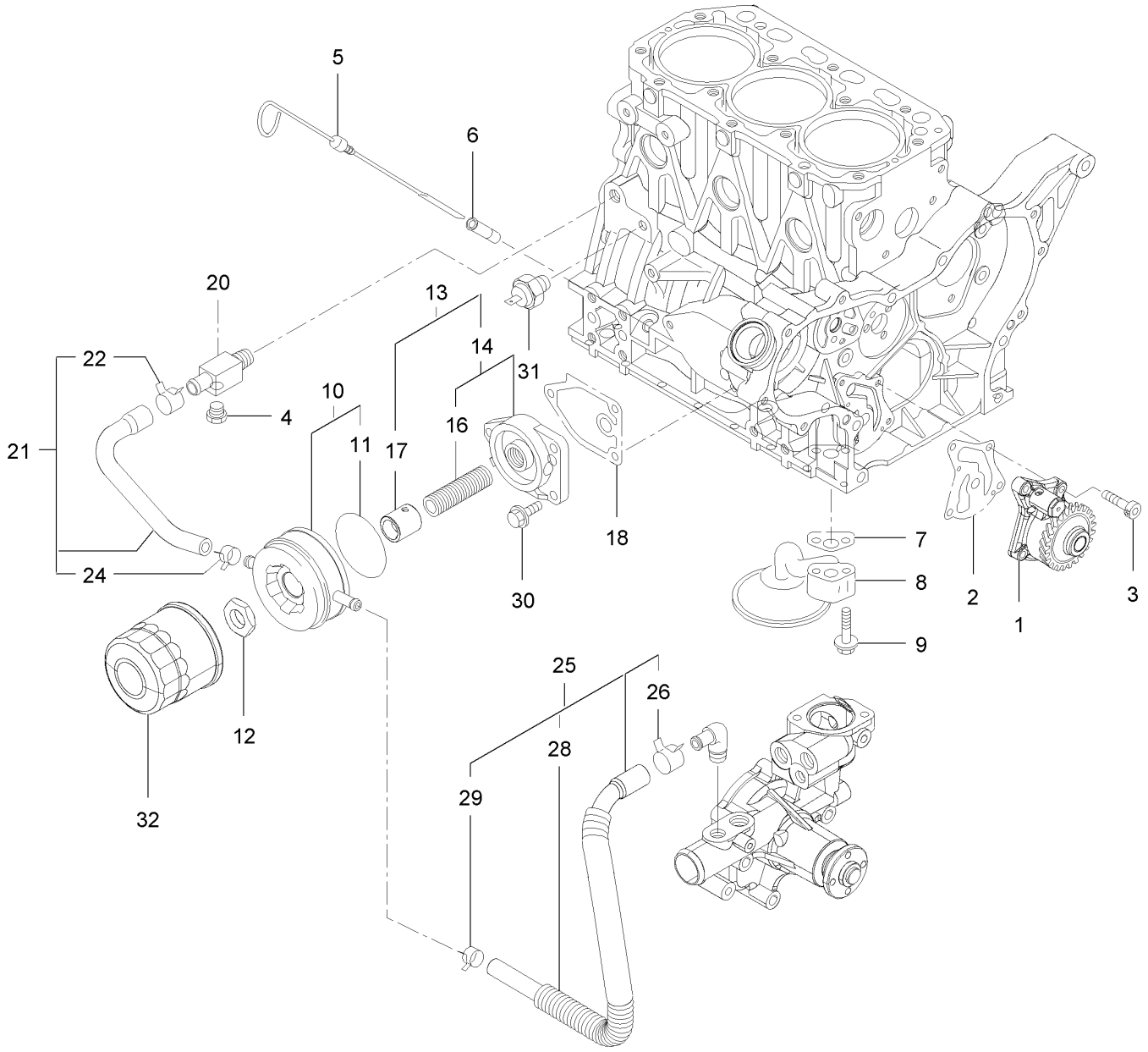

Oil Pump Assembly (continued)

Ref.	Part Number	Qty.	Description
1	127-4753	1	Oil Pump ASM
2	127-3004	1	Gasket
3	125-7232	4	Bolt
4	125-7171	1	Plug-Drain
5	125-6987	1	Dipstick
6	125-6954	1	Guide-Dipstick
7	125-7022	1	Gasket
8	135-4017	1	Pipe ASM-Oil Inlet
9	125-7217	2	Bolt
10	135-4018	1	Cooler ASM-Oil
11	135-4019	1	Packing-Oil Cooler
12	135-4020	1	Nut
13	135-4021	1	Bracket ASM-Lo Filt
14	125-6989	1	Bracket ASM
16	125-7042	1	Stud
17	135-4022	1	Collar-Oil Cooler
18	125-7024	1	Gasket
20	125-6990	1	Joint
21	125-7078	1	Pipe ASM
22	125-7162	1	Clip
24	125-7191	1	Clamp-Hose
25	127-3804	1	Pipe ASM
26	125-7162	1	Clip
28	127-3805	1	Tube
29	125-7191	1	Clamp-Hose
30	125-7595	3	Bolt
31	125-6918	1	Switch-Oil
32	125-7025	1	Filter-Engine

Cooling Water System Assembly

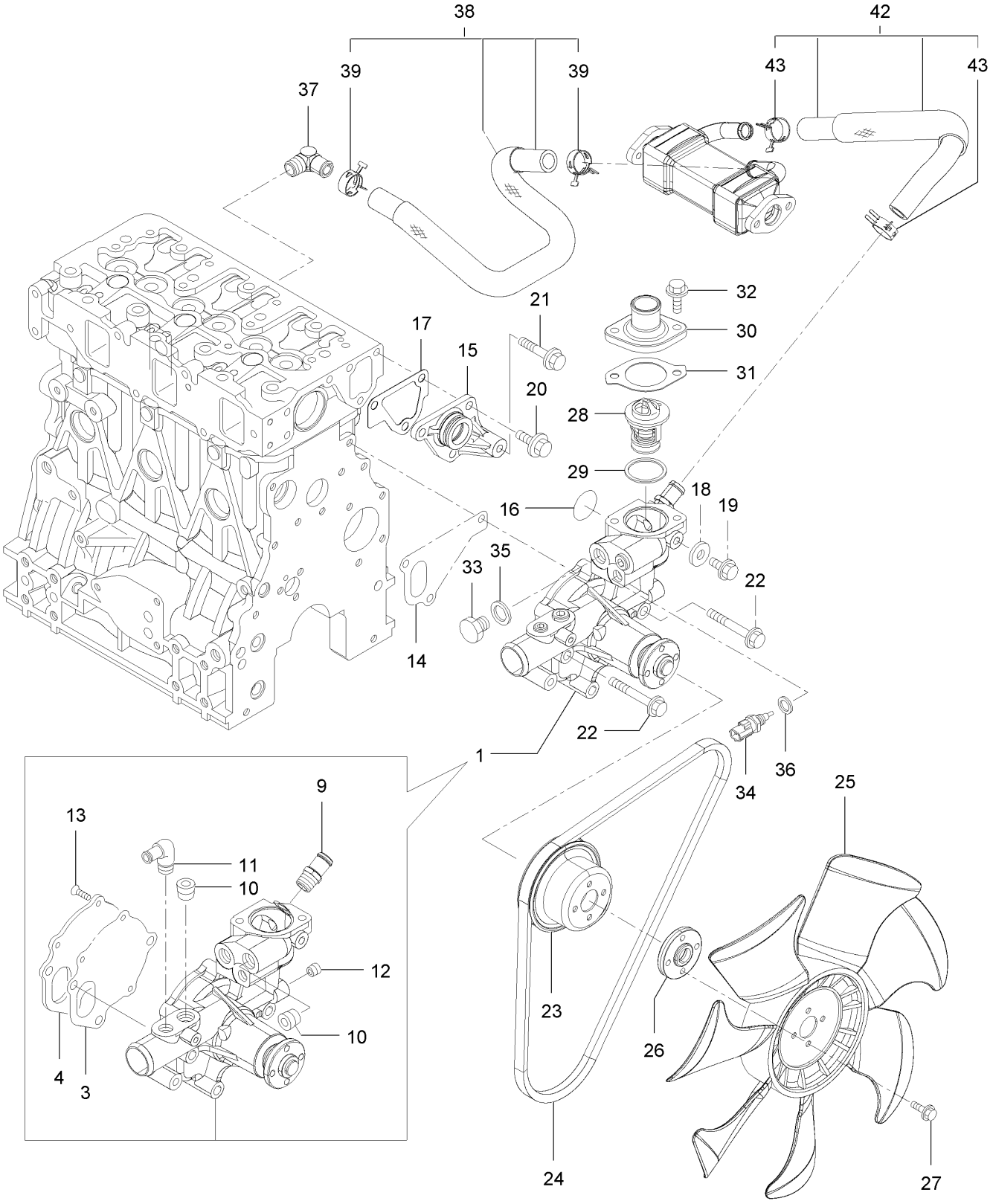

Cooling Water System Assembly (continued)

Ref.	Part Number	Qty.	Description
1	127-3071	1	Water Pump ASM
3	125-6998	1	Gasket
4	125-6999	1	Plate
9	127-3017	1	Joint
10	125-7123	2	Plug
11	125-7001	1	Elbow
12	125-7195	1	Plug
13	125-7234	3	Screw
14	125-7047	1	Gasket
15	125-6986	1	Joint
16	125-7048	1	O-Ring
17	125-6978	1	Gasket
18	125-7192	1	Gasket
19	93-0362	1	Bolt
20	100-6928	3	Bolt
21	125-7219	1	Bolt
22	125-7222	3	Bolt
23	127-4712	1	V-Pulley

Ref.	Part Number	Qty.	Description
24	127-4771	1	V-Belt
25	127-4702	1	Fan
26	127-3810	1	Spacer
27	125-7209	4	Bolt
28	125-7029	1	Thermostat
29	125-7026	1	Gasket
30	125-7034	1	Cover
31	125-7110	1	Gasket
32	125-7594	2	Bolt
33	125-6953	1	Plug
34	125-7124	1	Sensor-Thermostat, CW
35	125-6979	1	Gasket
36	125-7176	1	Washer-Seal
37	127-4705	1	Elbow
38	127-4757	1	E G R-C Pipe ASM
39	127-3020	2	Clip-Hose
42	127-3811	1	CW Pipe ASM
43	127-3020	2	Clip-Hose

Fuel Supply Pump Assembly

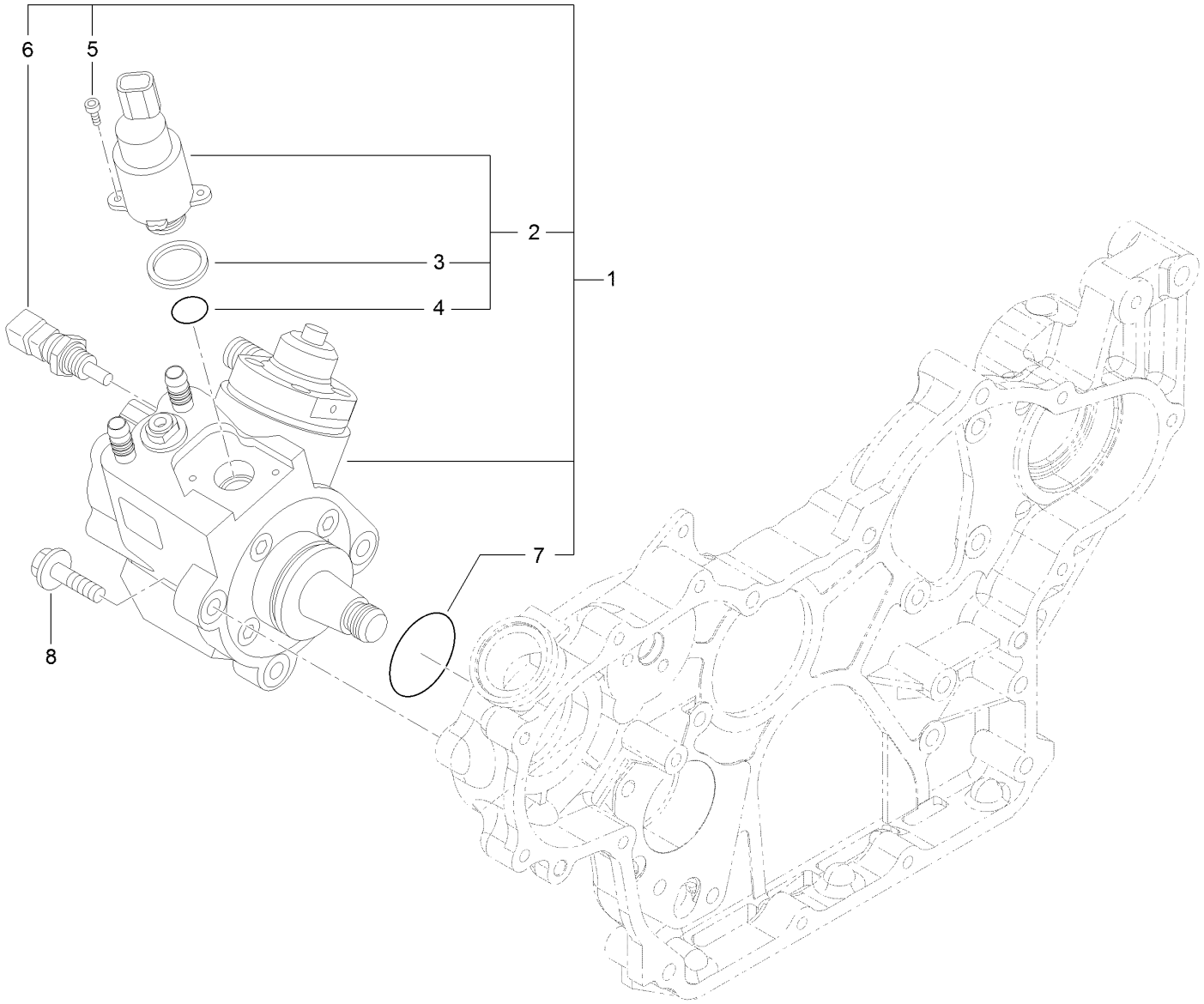

Fuel Supply Pump Assembly (continued)

Ref.	Part Number	Qty.	Description
1	127-3073	1	Fuel Pump ASM
2	131-2103	1	Valve ASM
3	131-2105	1	Ring-Sealing
4	131-2106	1	O-Ring
5	131-2107	2	Bolt
6	131-2108	1	Sensor-Temperature
7	127-3074	1	O-Ring
8	125-7216	3	Bolt

Fuel Injection Valve Assembly

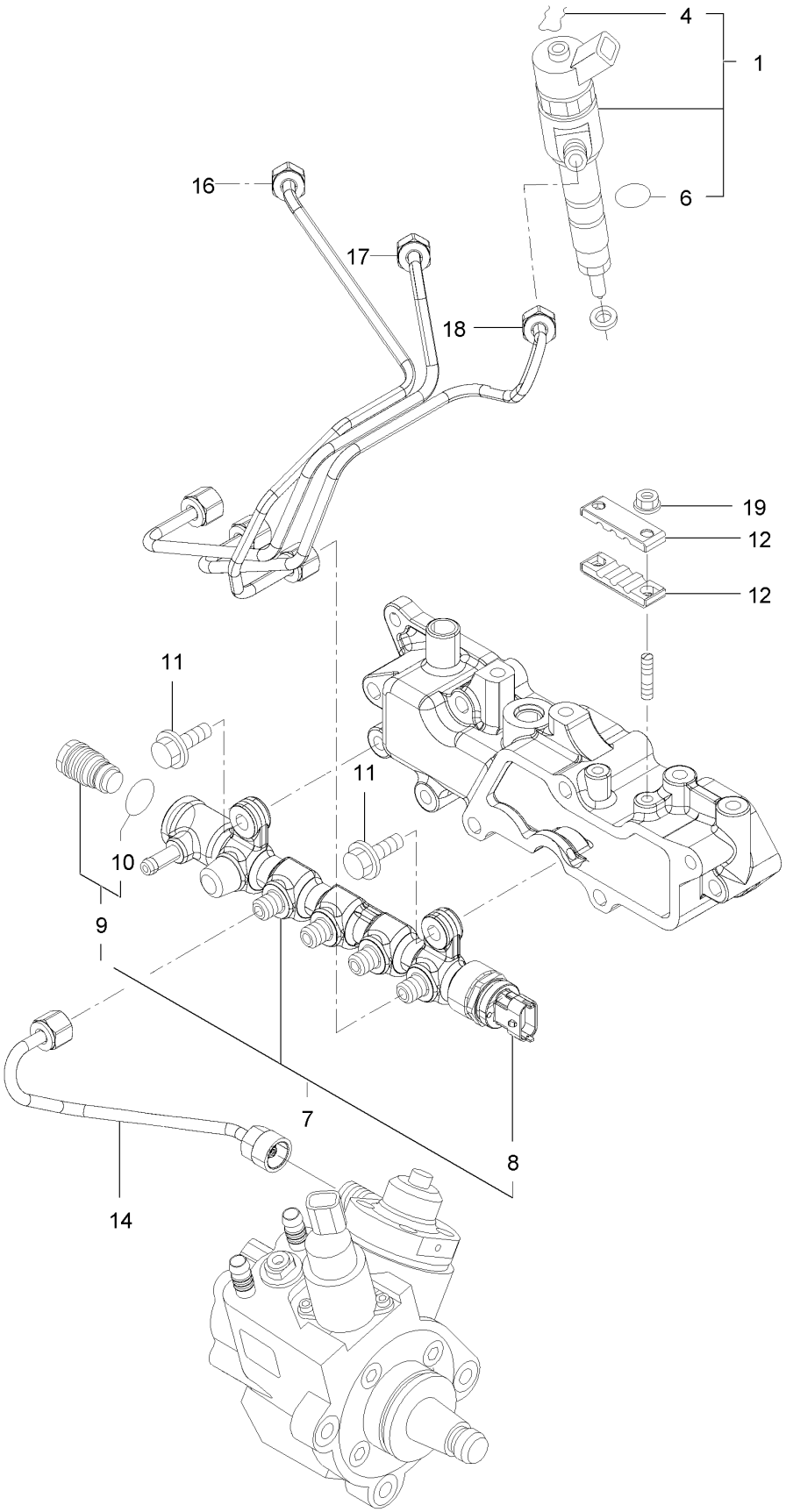

Fuel Injection Valve Assembly (continued)

Ref.	Part Number	Qty.	Description
1	127-4754	3	Injector ASM
4	130-7430	3	Ring-Retaining
6	137-5173	3	O-Ring
7	127-3812	1	Rail ASM
8	130-7431	1	Sensor-Pressure, Rail
9	130-7432	1	Valve ASM
10	130-7433	1	O-Ring
11	125-7215	2	Bolt
12	127-3813	2	Retainer
14	127-3082	1	Rail In Pipe ASM
16	127-3814	1	Injection Pipe ASM
17	127-3083	1	Injection Pipe ASM
18	127-3084	1	Injection Pipe ASM
19	125-7231	2	Nut

Fuel Line Assembly

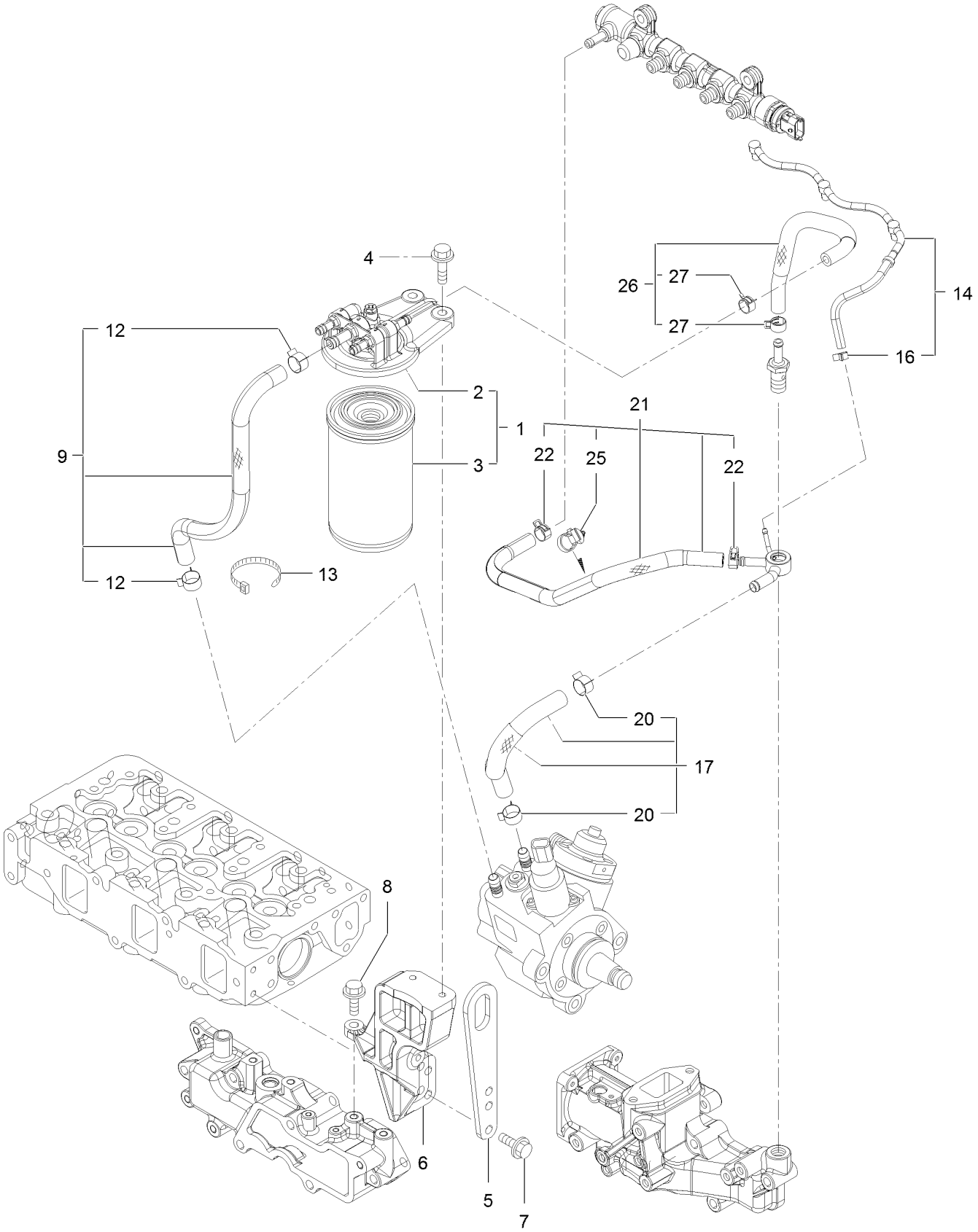

Fuel Line Assembly (continued)

Ref.	Part Number	Qty.	Description
1	127-3075	1	Fuel/Oil Filter ASM
2	127-3076	1	Fuel/Oil Filter Bracket ASM
3	125-8752	1	Filter-Fuel/Oil
4	125-7216	2	Bolt
5	125-7111	1	Lifter
6	127-3815	1	Filter Bracket ASM
7	125-7215	2	Bolt
8	125-7215	1	Bolt
9	127-3077	1	Fuel Pipe ASM
12	125-7191	2	Clamp-Hose
13	127-2981	1	Band
14	135-4023	1	Pipe ASM-Fo Return
16	127-3172	1	Clamp-Hose
17	127-3078	1	Fuel Pipe ASM
20	125-7191	2	Clamp-Hose
21	127-3817	1	Fuel Pipe ASM
22	127-2950	2	Clip-Hose
25	127-3087	1	Band-Clip
26	127-3079	1	Fuel Pipe ASM
27	127-2950	2	Clip-Hose

Starting Motor Assembly

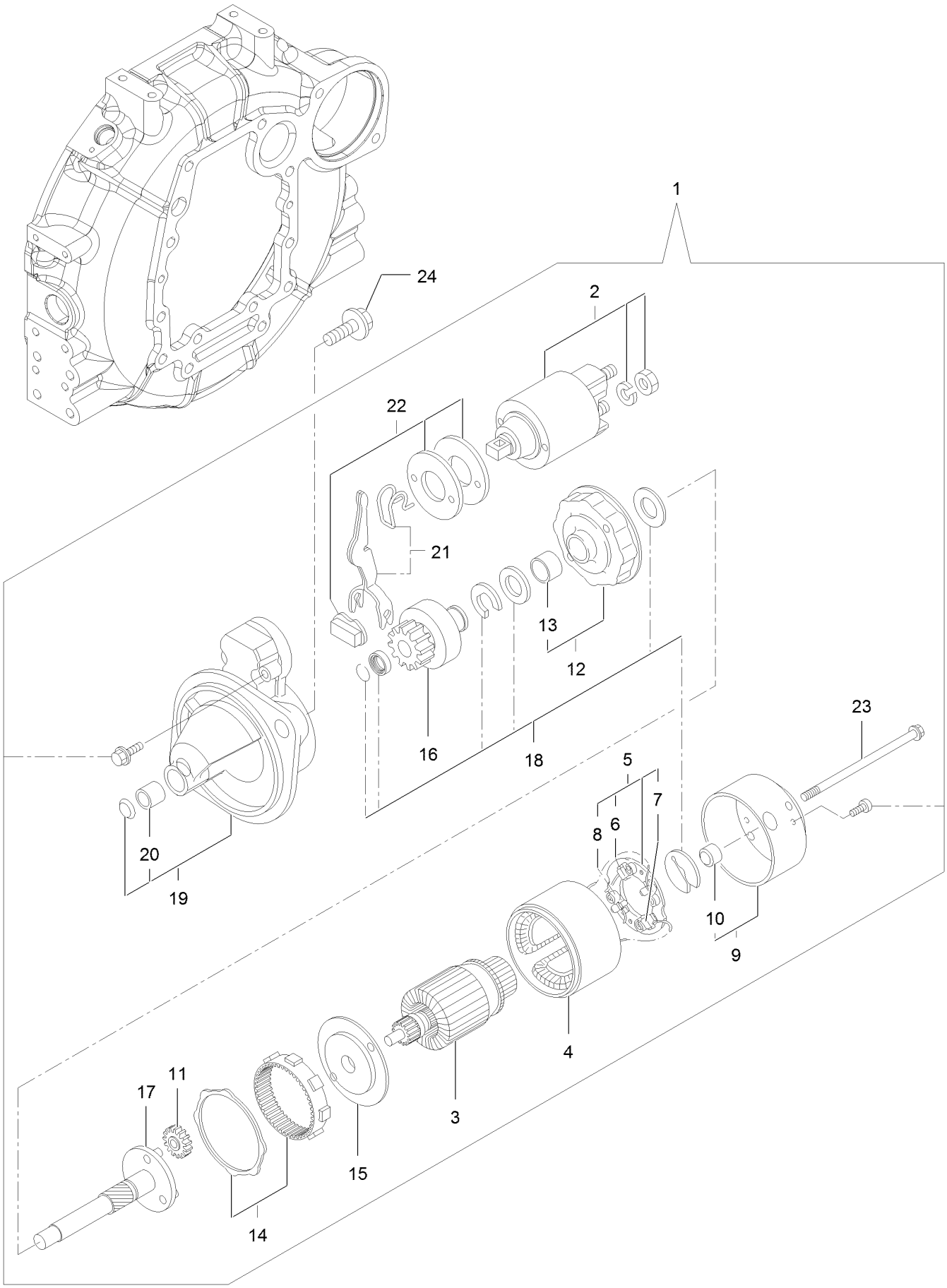

Starting Motor Assembly (continued)

Ref.	Part Number	Qty.	Description
1	127-3818	1	Starter ASM
2	127-3819	1	Switch ASM
3	127-3820	1	Armature ASM
4	127-3821	1	Yoke ASM
5	127-3822	1	Brush Holder ASM
6	127-3823	2	Brush
7	127-3824	1	Brush Set
8	127-3825	4	Spring
9	127-3826	1	Cover ASM
10	127-3827	1	Metal
11	127-3828	3	Gear
12	127-3829	1	Bracket
13	127-3830	1	Bracket
14	127-3831	1	Gear
15	127-3832	1	Bracket
16	127-3833	1	Pinion ASM
17	127-3834	1	Shaft
18	127-3835	1	Washer Set
19	127-3836	1	Case ASM
20	127-3837	1	Metal-Starter
21	127-3838	1	Lever Set
22	127-3839	1	Dust Cover ASM
23	135-4024	2	Bolt-Through
24	125-7225	2	Bolt

Generator Assembly

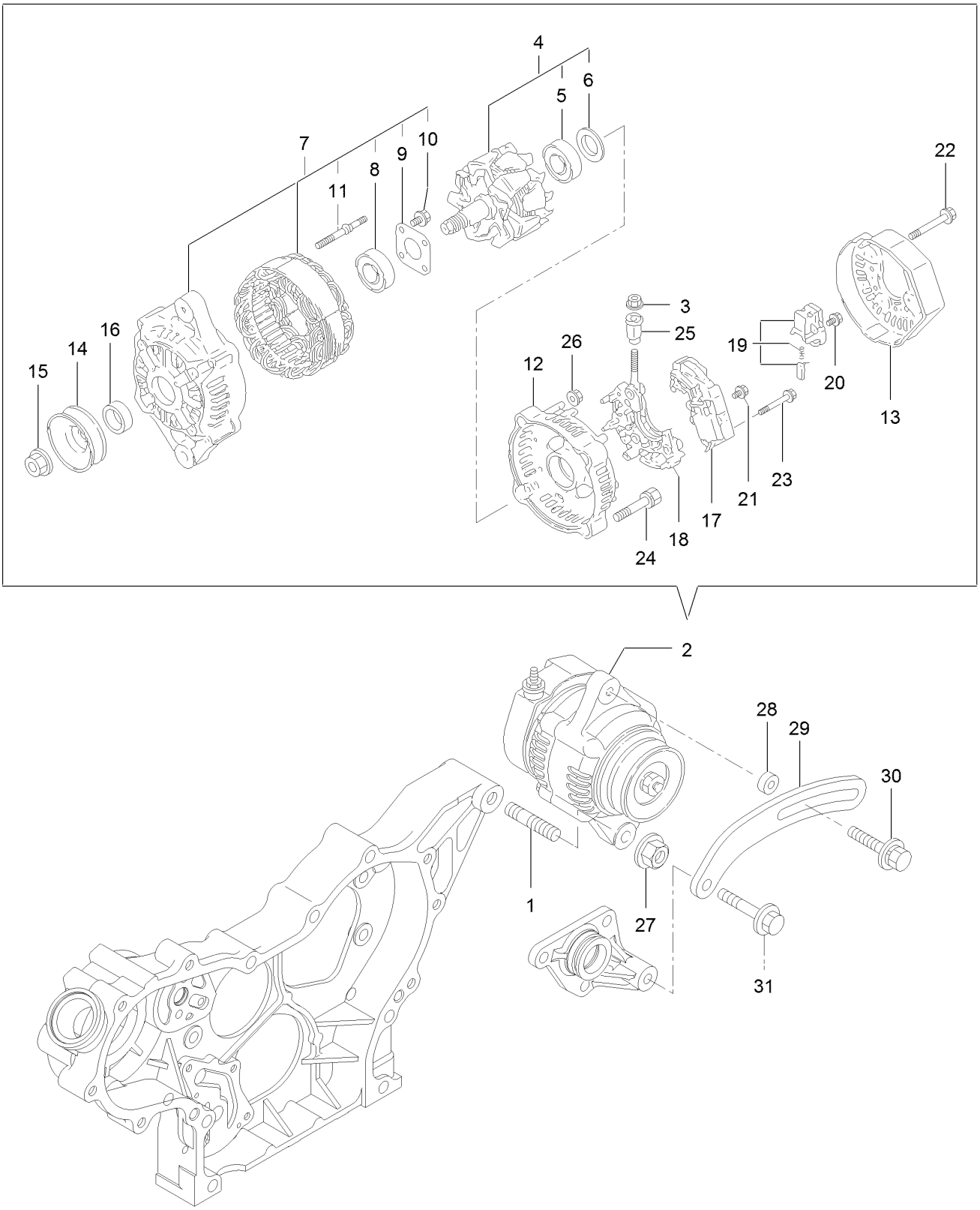

Generator Assembly (continued)

Ref.	Part Number	Qty.	Description
1	127-3011	1	Stud
2	135-4278	1	Alternator
3	127-3190	1	Nut
4	127-3843	1	Rotor ASM
5	127-2983	1	Bearing-Ball
6	127-2962	1	Cover
7	135-4025	1	Frame ASM
8	127-2958	1	Bearing-Ball
9	127-2959	1	Plate-Retainer
10	127-2960	4	Screw
11	127-2961	2	Stud
12	127-3845	1	Frame
13	127-3846	1	Cover
14	127-2954	1	Pulley
15	127-2955	1	Nut
16	127-2957	1	Collar
17	135-4026	1	Regulator ASM
18	127-3848	1	Holder
19	127-2993	1	Holder
20	127-2965	6	Screw
21	127-2966	1	Screw
22	127-2967	3	Bolt
23	127-2968	2	Screw
24	127-2969	2	Bolt
25	127-2970	1	Bushing-Insulation
26	127-2971	2	Nut
27	125-7230	1	Nut
28	125-6947	1	Spacer
29	127-2977	1	Adjuster
30	135-4027	1	Bolt-Adjust
31	125-7219	1	Bolt

Electronic Control Unit Assembly

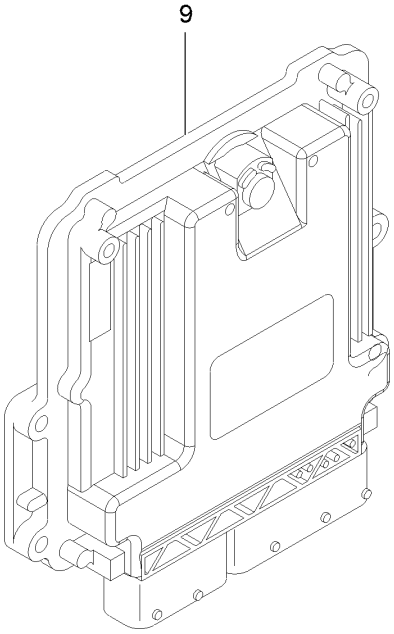

Electronic Control Unit Assembly (continued)

Ref.	Part Number	Qty.	Description
9	127-3085	1	E C U ASM ●

● Contact an Authorized Service Dealer

Electric Parts Assembly

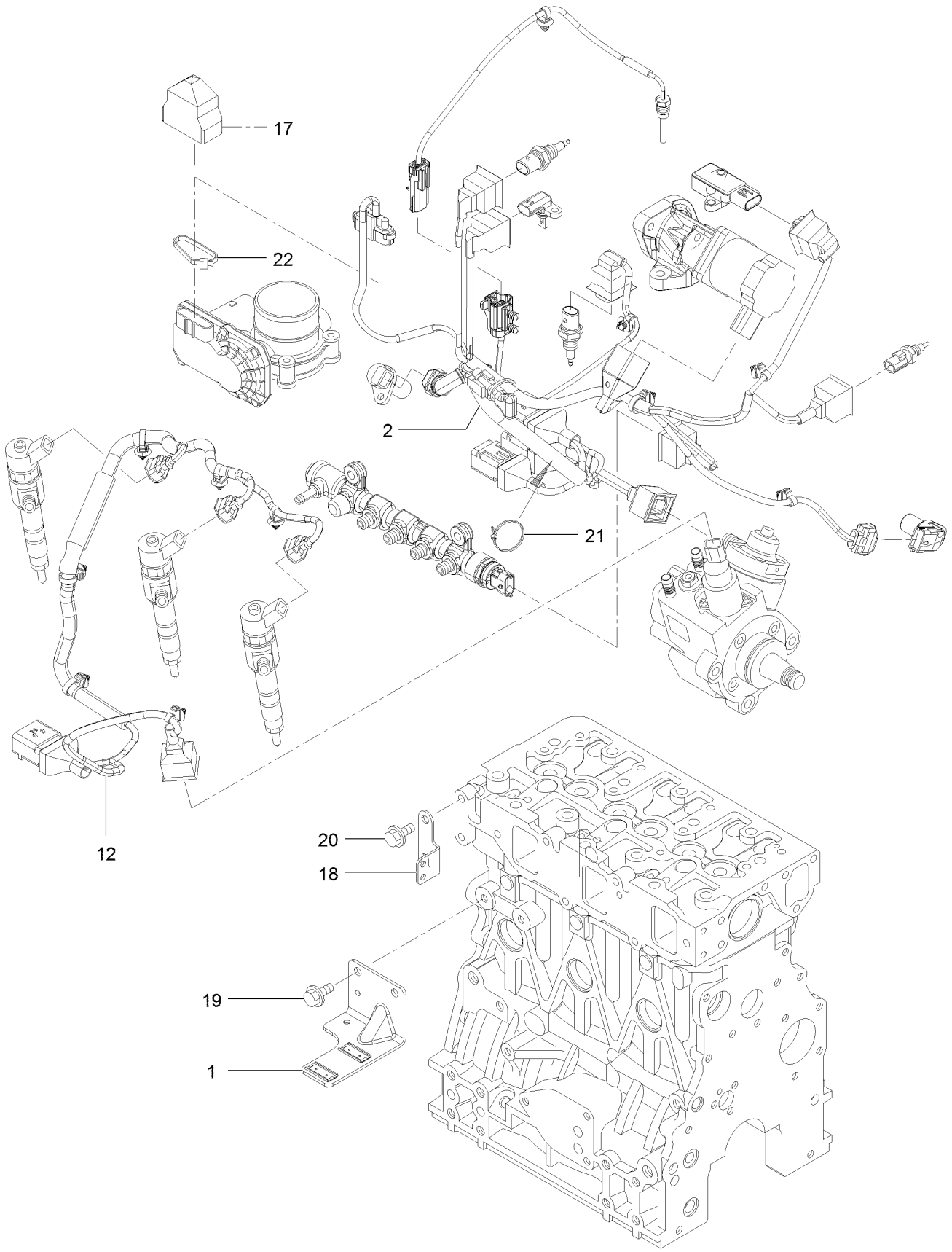

Electric Parts Assembly (continued)

Ref.	Part Number	Qty.	Description
1	130-7436	1	Bracket-Connector
2	135-4029	1	Harness
12	130-7438	1	Harness
17	131-2713	1	Boot-Cap
18	127-3090	1	Bracket-Harness
19	125-7213	2	Bolt
20	125-7212	2	Bolt
21	127-3187	1	Band
22	127-3188	1	Band

Fuel Pump Assembly

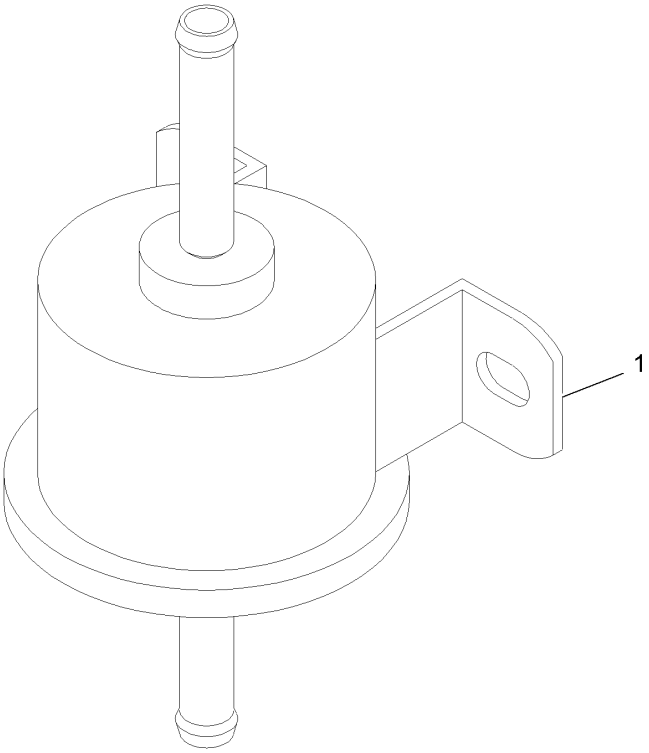

Fuel Pump Assembly (continued)

Ref.	Part Number	Qty.	Description
1	121-5613	1	Pump-Fuel, Electric

Gasket Set

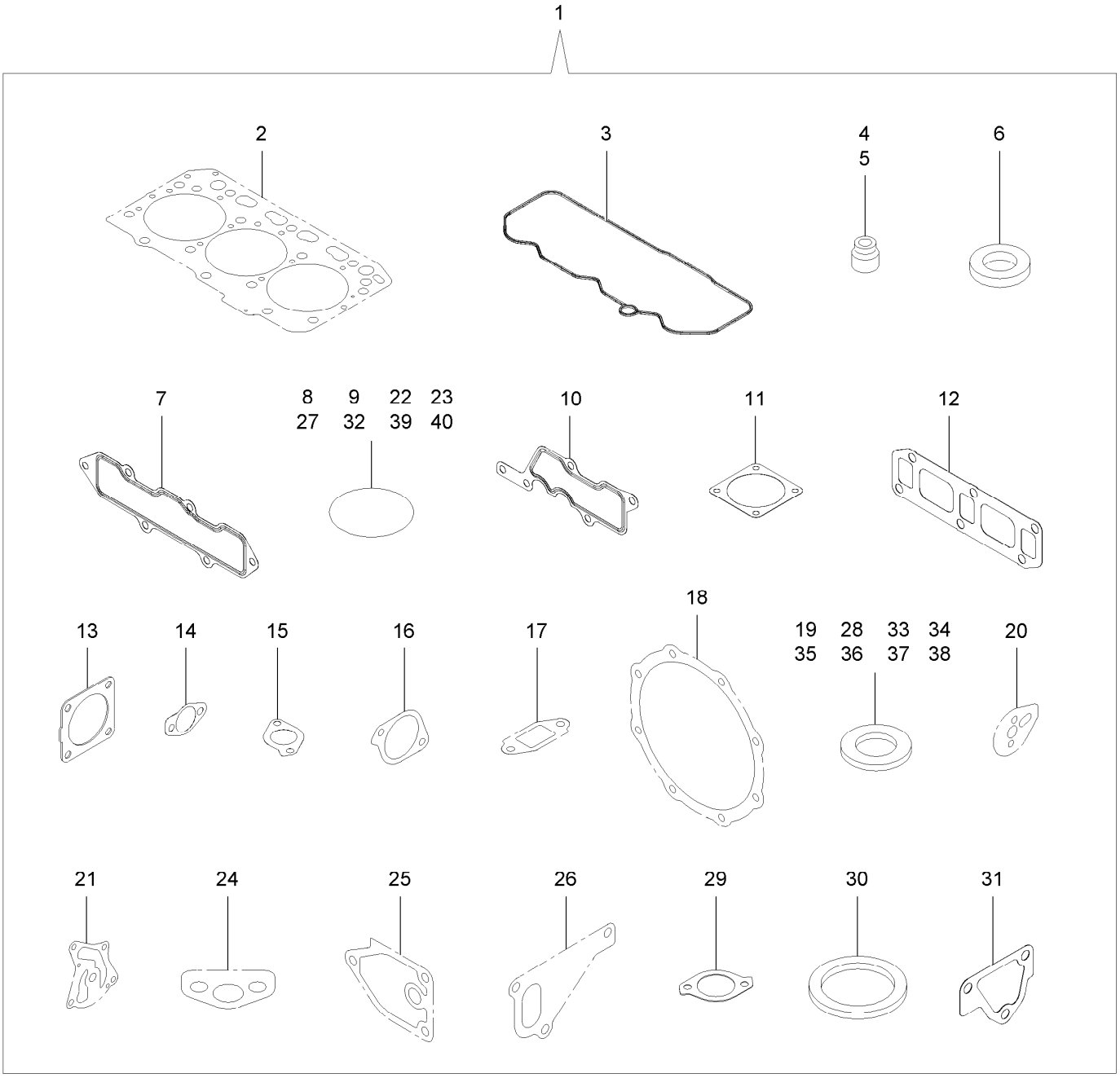
1
2
3
4
5
6
7
8
9
22
23
27
32
39
40
10
11
12
13
14
15
16
17
18
19
28
33
34
35
36
37
38
20
21
24
25
26
29
30
31

Gasket Set (continued)

Ref.	Part Number	Qty.	Description
1	130-7440	1	Packing (Gasket Set)
2	127-4716	1	Head Gasket ASM
3	127-3856	1	Gasket-Valve Cover
4	127-2986	3	Seal-Stem, Valve
5	127-3027	3	Seal-Stem, Valve
6	127-3021	3	Gasket-Injector
7	127-3857	1	Gasket-Manifold, Intake
8	127-3032	2	O Ring-Sensor, Pressure
9	127-3033	1	O-Ring
10	127-3034	1	Gasket-Collector
11	127-3037	2	Gasket-Throttle
12	127-3775	1	Gasket-Manifold, Exhaust
13	127-2987	1	Gasket-Silencer
14	127-3043	2	Gasket-Cooler, E G R
15	127-3016	1	Gasket
16	127-3050	1	Gasket-Intake Valve, E G R
17	127-3051	1	Gasket-Out Valve, E G R
18	127-3859	2	Gasket-D P F
19	127-3056	4	Gasket-Sensor
20	127-3069	1	Gasket-Idle, Shaft B

Ref.	Part Number	Qty.	Description
21	127-3004	1	Gasket
22	125-6909	2	O-Ring
23	127-2973	1	O-Ring
24	125-7022	1	Gasket
25	125-7024	1	Gasket
26	125-7047	1	Gasket
27	125-7048	1	O-Ring
28	125-6979	1	Gasket
29	125-7110	1	Gasket
30	125-7026	1	Gasket
31	125-6978	1	Gasket
32	127-3074	1	O-Ring
33	125-7174	1	Washer-Seal
34	125-7176	1	Washer-Seal
35	127-3166	2	Washer-Seal
36	125-7177	1	Washer-Seal
37	125-7192	1	Gasket
38	127-3174	2	Gasket
39	93-0418	3	O-Ring
40	125-7197	2	O-Ring

Attachments and Accessories

For 74096 Z Master Professional 7500-D Series Riding Mower With 96in TURBO FORCE Rear Discharge Mower

Product Name	Model/Part
Blade-Mid Flow, 24.5in	105-7711-03
Blade-Lo Flow, 24.5in	105-7712-03
Blade-Atomic, 24.5in	105-7719-03
Blade-Recyler, 24.5in	105-7778-03
Blade-Hi Flow, 24.5in	105-7784-03
6 Pack Blade, 24.5in Hi-Flow	108-1120
6 Pack Blade, 24.5in Atomic	108-1126
Premium Transmission/Hydraulic Tractor Fluid (55 Gallon Drum)	108-1183
Premium Transmission/Hydraulic Tractor Fluid (5 Gallon Pail)	108-1184
6 Pack-Blade, 24.5in Mid-Flow	110-0404
6 Pack-Blade, 24.5in Lo-Flow	110-0410
6 Pack-Blade, 24.5in Recycler	110-0411
Sunshade Kit	126-8077
Jack Kit	127-6666
Jack Mount Kit	135-1768
Blade-Mulch, 24.5in	135-2446
Mulch Kit-96inch	135-2449
Slow Moving Vehicle Kit	135-2891
Rear Guard Kit	135-3445
Hitch Kit	135-3616
Oil-30/10W-30 Synthetic (Quart)	138-6053
Oil-30/10W-30 Synthetic (Gallon)	138-6054

Notes:

Notes:

Notes:

TORO®

Count on it.