Form No. 3402-751 Rev B

TORO®

Count on it.

Parts Catalog

Groundsmaster® 3400 4-Wheel Drive

Traction Unit

Model No. 30651—Serial No. 316000001 and Up

Register at www.Toro.com.
Original Instructions (EN)

CE

3402-751 B

Ordering Replacement Parts

To order replacement parts, please supply the part number, the quantity, and the description of each part desired.

Understanding Reference Numbers

Each identified part in an illustration has a reference number. The reference number for a part also appears in the parts list, along with other information about the part.

This catalog uses two special reference number formats, one to indicate parts in a service assembly and another to indicate the quantity of a given part in an illustration.

Service Assembly Reference Numbers

Parts in service assemblies have reference numbers in the form a:b. The a represents the reference number of the entire service assembly and the b represents a sequential number unique to each part within the service assembly.

For example, a wheel assembly might be identified by reference number 6, the tire by 6:1, the valve by 6:2, and the wheel by 6:3. When you order the assembly identified by reference number 6, you receive all parts identified by reference numbers 6:1,6:2, and 6:3. However, you may also order any part individually. Reference numbers of this type appear in illustration and in parts lists.

Reference Numbers Indicating Quantity

In an illustration, if a reference number indicates more than one part, the reference number has the form nX y. The n represents the quantity of the part, the X is the multiplication symbol, and the y represents the reference number.

For example, in an illustration, the reference number 2X 37 means that two of the parts identified by reference number 37 are indicated.

Contents

Engine and Mounting Assembly . . . 4
Radiator and Shroud Assembly . . . 6
Rear Axle Assembly . . . 8
Steering Column, Seat and Platform Assembly . . . 10
Pedal Control Assembly . . . 12
Fuel Tank and Storage Pod Assembly . . . 14
Hood Assembly . . . 16
Roll-Over Protection System Assembly . . . 18
Hydraulic Oil Tank Assembly . . . 20
Rear Transmission Block Assembly . . . 22
Loom Kit . . . 24
Electrical Assembly . . . 26
Main Frame, Chassis, Front Wheel and Battery Assembly . . . 28
Transmission Manifold Assembly . . . 30
Cutter Manifold Assembly . . . 32
Hydraulic PTO Manifold Assembly No. 115-8467 . . . 34
Transmission and Tandem Pump Assembly . . . 36
Control Panel Assembly . . . 38
Filter Assembly . . . 40
Transmission Hydraulic Circuit Assembly . . . 42
Lift Manifold Assembly . . . 44
Hose Assembly No. 2 . . . 45
Hose Assembly No. 3 . . . 46
Crankcase Assembly . . . 47
Oil Pan and Oil Pump Assembly . . . 48
Cylinder Head Assembly . . . 49
Gear Case and Oil Filter Cartridge Assembly . . . 50
Cylinder Head Cover Assembly . . . 51
Dipstick and Guide Assembly . . . 52
Main Bearing Case Assembly . . . 53
Camshaft and Idle Gear Shaft Assembly . . . 54
Piston and Crankshaft Assembly . . . 55
Flywheel Assembly . . . 56
Fuel Camshaft and Governor Shaft Assembly . . . 57
Idle Apparatus and Stop Solenoid Assembly . . . 58
Injection Pump and Fuel Pump Assembly . . . 59
Speed Control Plate Assembly . . . 60
Nozzle Holder and Glow Plug Assembly . . . 61
Nozzle Holder Assembly . . . 62
Governor Assembly . . . 63
Fuel Filter Assembly . . . 64
Alternator and Pulley Assembly . . . 65
Alternator Components Assembly . . . 66
Starter Assembly . . . 67
Starter (Component Part) Assembly . . . 68
Water Flange and Thermostat Assembly . . . 69
Water Pump Assembly . . . 70
Valve and Rocker Arm Assembly . . . 71
Intake and Exhaust Manifold Assembly . . . 72
Miscellaneous Engine Parts . . . 73
Attachments and Accessories . . . 74

© 2020—The Toro® Company

8111 Lyndale Avenue South
Bloomington, MN 55420

Contact us at www.Toro.com.
Printed in the USA.

All Rights Reserved

Engine and Mounting Assembly

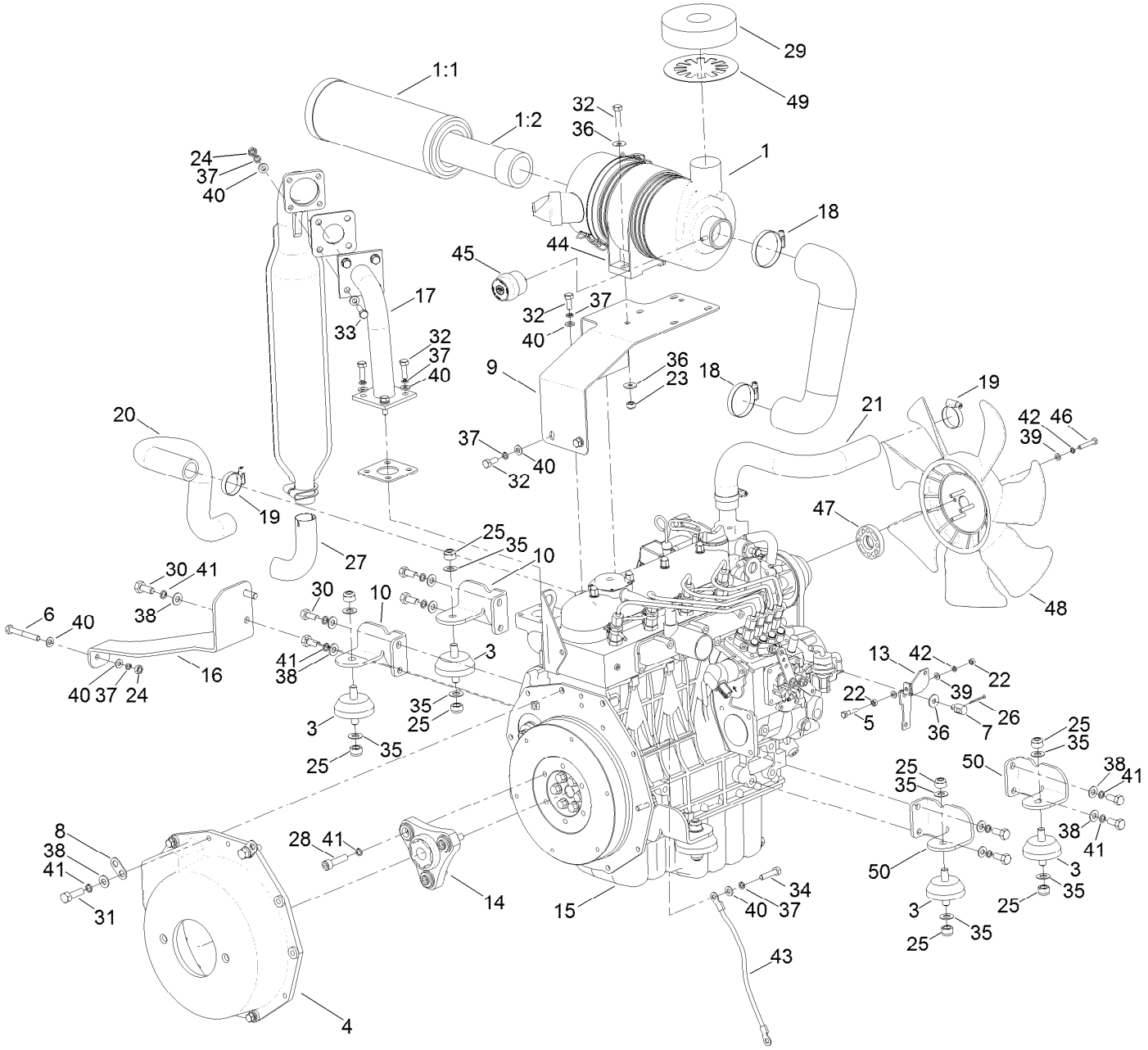

Engine and Mounting Assembly (continued)

Ref.	Part Number	Qty.	Description
1	111-3805	1	Air Filter ASM
1:1	111-3808	1	Filter-Element, Main
1:2	111-3809	1	Filter-Element, Safety
3	910816	4	Isomount-Engine
4	922851	1	Housing-Bell
5	09547	1	Screw-HH
6	09371	1	Bolt
7	111-3298	1	Pivot-Throttle, Boss
8	74-01-327	2	Bracket-Loom, Tie
9	111-2588-03	1	Bracket-Air Cleaner
10	111-3043-03	2	Bracket-Mount, Engine
13	111-3299-03	1	Bracket-Throttle
14	111-2556	1	Coupling
15	111-1290	1	Engine-Kubota
16	111-3045-03	1	Stay-Exhaust
17	111-4012	1	Flange-Exhaust
18	65-07-042	2	Clip-Hose
19	924438	4	Clamp-Hose
20	111-2567	1	Hose-Radiator, Bottom
21	910921	1	Hose-Top
22	09437	2	Nut
23	09441	2	Nut-Hex, NI
24	ZNH1H000U	5	Nut-Hex
25	09231	8	Nut-Hex
26	70-11-005	1	Pin-Split
27	940213	1	Tail Pipe-Exhaust
28	111-3806	3	Screw-HSH
29	111-3555	1	Seal-Air Intake
30	50-11-005	10	Screw-HH
31	111-0597	2	Screw-HH
32	03162	10	Screw-HH
33	09369	4	Screw-HH
34	ZDH1H035U	8	Screw-HH
35	09283	8	Washer
36	09267	5	Washer-Plain
37	03469	20	Washer-Spring
38	ZWQ1J000U	12	Washer-Plain
39	ZWP1F000U	6	Washer-Plain
40	ZWP1H000U	26	Washer-Plain
41	09480	15	Washer-Lock
42	09474	5	Washer-Spring
43	70-09-023	1	Cable-Earth
44	111-3807	1	Bracket-Mounting, Air Filter
45	953870	1	Indicator-Filter Blockage
46	09645	4	Setscrew-HH
47	104-4247	1	Spacer-Fan
48	110-0966	1	Fan-Cooling
49	111-6937-03	1	Washer-Pad, Intake Air
50	111-7141-03	2	Bracket-Mount, Engine

Radiator and Shroud Assembly

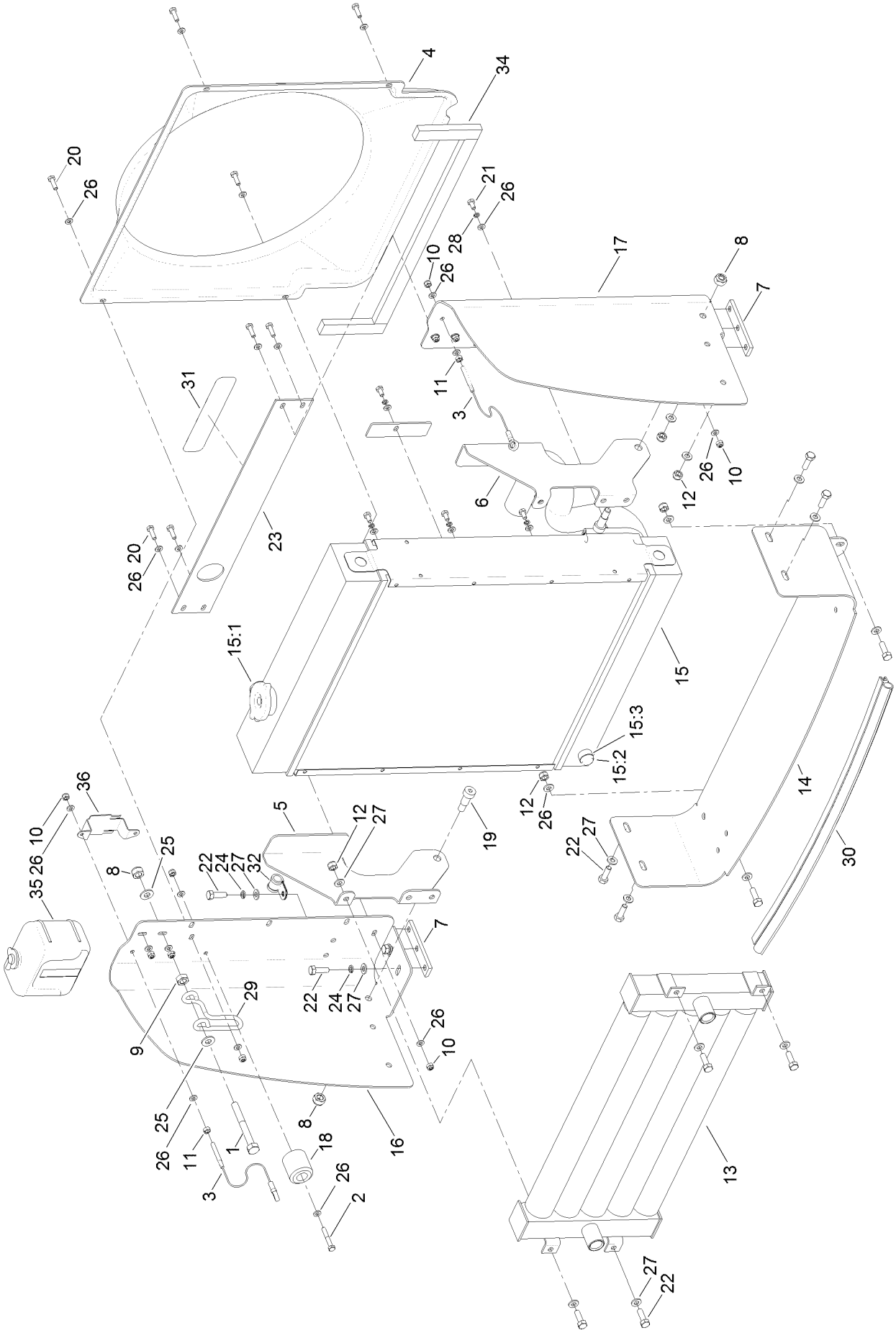

Radiator and Shroud Assembly (continued)

Ref.	Part Number	Qty.	Description
1	ZBH1J090U	1	Screw-HH
2	ZBH1F040U	2	Screw-HH
3	924825	2	Cable-Stay, Cover
4	111-3301	1	Cowl-Fan
5	111-3010-03	1	Hinge-Oil Cooler, LH
6	111-3011-03	1	Hinge-Oil Cooler, RH
7	111-3281	2	Bar-Nut
8	ZNN1J000U	3	Nut-Hex, NI
9	09449	1	Nut
10	09438	12	Nut-Nyloc
11	09437	2	Nut
12	09441	10	Nut-Hex, NI
13	70-06-171	1	Cooler-Oil
14	111-3009-03	1	Plate-Seal, Lower
15	111-5193	1	Radiator ASM
15:1	111-0698	1	Cap-Radiator
15:2	30-06-200	1	Plug-HYD
15:3	200134	1	Washer
16	111-3006-03	1	Bracket-Radiator, LH
17	111-3007-03	1	Bracket-Radiator, RH
18	61-07-003	2	Buffer-Rubber
19	ZIS1J020S	2	Bolt-Shoulder, Socket Head
20	09363	8	Screw-HH
21	09361	6	Screw-HH
22	03162	16	Screw-HH
23	111-3008-03	1	Seal-Top
24	03469	6	Washer-Spring
25	ZWQ1J000U	2	Washer-Plain
26	09472	30	Washer-Plain
27	ZWP1H000U	24	Washer-Plain
28	09474	6	Washer-Spring
29	104-5429	1	Clamp-Form, Wire
30	994808	3	Excluder-Draught
31	111-3902	1	Decal-Engine, Fan/Radiator
32	111-6082	1	Clamp-Cable
34	111-7053	1	Seal-Bubble, Side
35	111-7452	1	Tank-Reserve, Coolant
36	108-9930-03	1	Bracket-Bottle

Rear Axle Assembly

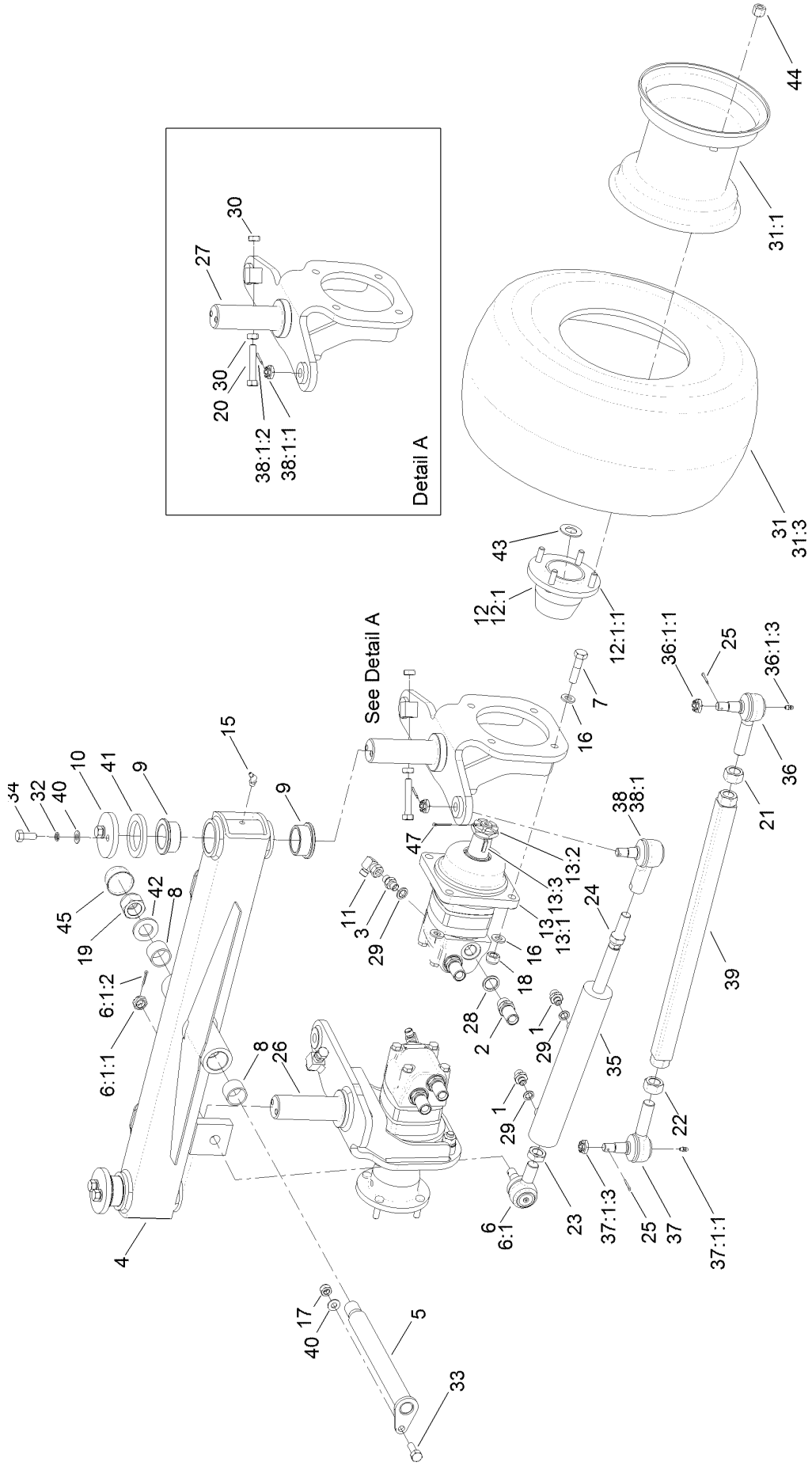

Rear Axle Assembly (continued)

Ref.	Part Number	Qty.	Description
1	50-06-009	2	Adaptor-BSP
2	09-06-216	4	Adaptor-Bulkhead
3	10-06-085	2	Adaptor
4	111-4995-03	1	Axle-Rear
5	111-3265	1	Pin-Axle
6	111-6578-03	1	Joint-Ball
6:1		1	Ball Joint ■ ●
6:1:1	111-5116	1	Nut-Castle
6:1:2	09306	1	Pin-Split
7	09552	8	Screw-HH
8	70-05-031	2	Bushing
9	111-3681	4	Bushing-Flanged, Oilite
10	70-01-197	2	Cap-Washer
11	31-06-004	2	Elbow-Compact
12	111-5176-03	2	Wheel Hub ASM
12:1		1	Hub-Wheel ■ ●
12:1:1	65-07-019	4	Stud-Wheel ●
13	111-2260	2	HYD Motor ASM
13:1	111-3421	1	Seal Kit ●
13:2	70-06-081	1	Castle-Nut
13:3	70-06-089	1	Key
15	63-07-027	3	Zerk-Grease, BSP (90 DEG)
16	HY09485	16	Washer-Plain
17	ZNN1J000U	1	Nut-Hex, NI
18	09650	8	Nut-Hex, Nyloc
19	ZNN1X000U	1	Nut-Hex, Nyloc
20	ZDH1J060U	2	Setscrew-HH
21	84-5300	1	Nut-Jam
22	110-5337	1	Nut-Jam
23	09828	1	Nut
24	09827	1	Nut - Jam
25	70-11-005	2	Pin-Split
26	111-4982-03	1	RH Rear Yoke ASM
27	111-4983-03	1	LH Rear Yoke ASM
28	10-06-032	4	Seal-Dowty
29	10-06-030	4	Seal-Dowty
30	09449	4	Nut
31	111-6876	2	Wheel ASM
31:1	111-6877	1	Rim-Wheel
31:2	72-07-068	1	Tube-Inner ●
31:3	924803	1	Tire
32	09480	4	Washer-Lock
33	09392	1	Screw-HH
34	09395	4	Screw-HH
35	924724	1	HYD Steering Cylinder ASM
35:1	111-4872	1	Seal Kit ●
36	71-4740-03	1	RH Tie Rod End ASM
36:1		1	End-Rod, Tie (RH) ■ ●
36:1:1	105-7941	1	Nut-Hex, Slotted
36:1:2	105-7835	1	Seal ●
36:1:3	302-5	1	Fitting-Grease
37	2411-46-03	1	LH Tie Rod ASM
37:1		1	End-Rod, Tie (LH) ■ ●
37:1:1	302-5	1	Fitting-Grease
37:1:2	105-7835	1	Seal ●
37:1:3	105-7941	1	Nut-Hex, Slotted
38	111-5087-03	1	Joint-Ball
38:1		1	Joint-Ball ■ ●
38:1:1	111-5116	1	Nut-Castle
38:1:2	09306	1	Pin-Split
39	111-7924-03	1	Rod-Tie
40	ZWQ1J000U	5	Washer-Plain
41	70-07-149	2	Washer-Felt
42	09555	1	Washer
43	ZWP1T000U	2	Washer-Plain
44	65-07-009	8	Nut-Wheel, Dome
45	10-11-100	1	Cap-Nut
47	70-11-004	2	Pin-Split

● Not illustrated

■ Not serviced separately

Steering Column, Seat and Platform Assembly

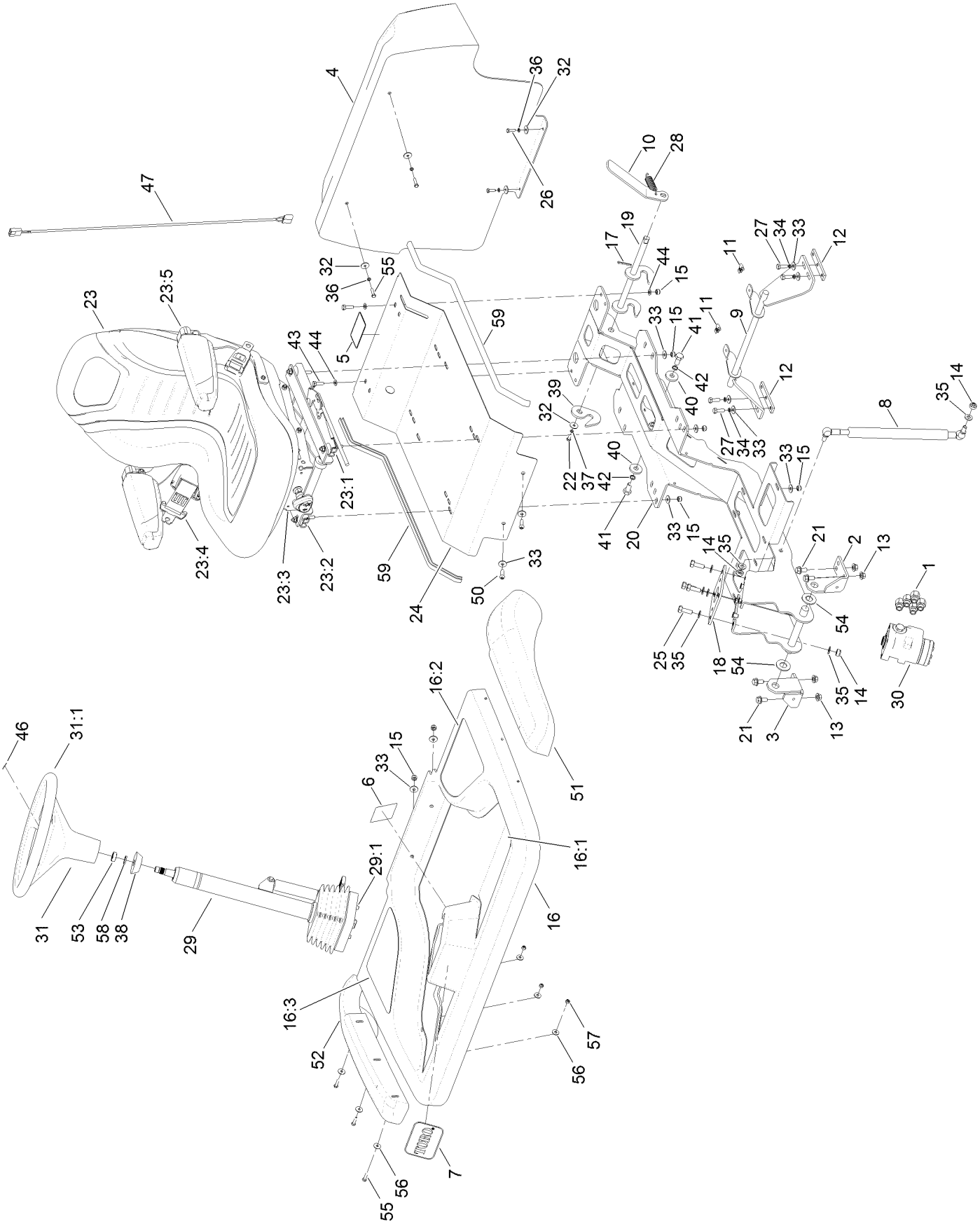

Steering Column, Seat and Platform Assembly (continued)

Ref.	Part Number	Qty.	Description
1	111-3509	5	Adaptor
2	111-3243-03	1	Bracket-Platform Pivot, LH
3	111-2665-03	1	Bracket-Platform Pivot, RH
4	111-3293	1	Bulkhead
5	111-3566	1	Decal-Latch, Platform
6	111-3562	1	Decal
7	67-1300	1	Decal
8	111-3510	1	Spring-Gas
9	111-3140-03	1	Bar-Latch
10	111-3269-03	1	Lever-Latch, Platform
11	410076	2	Nut
12	111-3281	2	Bar-Nut
13	63-11-015	4	Nut-Hex
14	ZNN1J000U	6	Nut-Hex, NI
15	09441	16	Nut-Hex, NI
16	111-3296	1	Operator Platform ASM
16:1	111-3506	1	Mat-Floor
16:2	111-3507	1	Mat-Side, LH
16:3	111-3508	1	Mat-Side, RH
17	70-11-004	1	Pin-Split
18	111-2899-03	1	Plate-Mount, Pump (Steering)
19	111-3266	1	Latch-Platform
20	111-2640-03	1	Support-Platform
21	63-11-018	4	Screw-Durloc
22	09362	1	Screw-HH
23	111-3500	1	Seat ASM (W/Seat Belt)
23:1	111-3498	1	Adjuster-Rail, Seat
23:2	111-3499	1	Rail-Adjuster, Slave
23:3	111-3501	1	Suspension-Seat
23:4	111-3502	1	Seat Belt ASM
23:5	111-3511	1	Arm Rest Kit
23:6	111-3674	1	Switch-Seat ●
24	111-3069-03	1	Pan-Seat
25	09392	4	Screw-HH
26	09363	2	Screw-HH
27	03162	4	Screw-HH
28	70-07-063	1	Spring-Extension
29	111-6756	1	Steering Column ASM
29:1	110-6462	1	Bellows-Rubber
30	111-7464	1	Valve-Control, Steering
31	98-1471	1	Wheel-Steering
31:1	98-1468	1	Cover-Wheel, Steering
32	09263	5	Washer
33	09267	20	Washer-Plain
34	03469	4	Washer-Spring
35	ZWQ1J000U	10	Washer-Plain
36	09264	4	Washer-Spring
37	09474	1	Washer-Spring
38	93-5429	1	Collar-Foam
39	111-3268	1	Latch-Plate, Platform
40	63-01-115	2	Washer
41	09571	2	Screw-HH
42	09599	2	Washer-Lock
43	03162	2	Screw-HH
44	ZWP1H000U	4	Washer-Plain
46	98-1459	1	Decal
47	111-6186	1	Cable-Seat, Beacon
50	ZHS1H025U	2	Screw-HSBH
51	111-4921	1	Mudguard-LH
52	111-4922	1	Mudguard-RH
53	09827	1	Nut - Jam
54	09499	2	Washer
55	09364	8	Screw-HH
56	09262	12	Washer
57	09438	6	Nut-Nyloc
58	HY4200	1	Washer-Spring
59	50-08-001	2	Edging-Rubber
99	994808	1	Excluder-Draught ●

● Not illustrated

Pedal Control Assembly

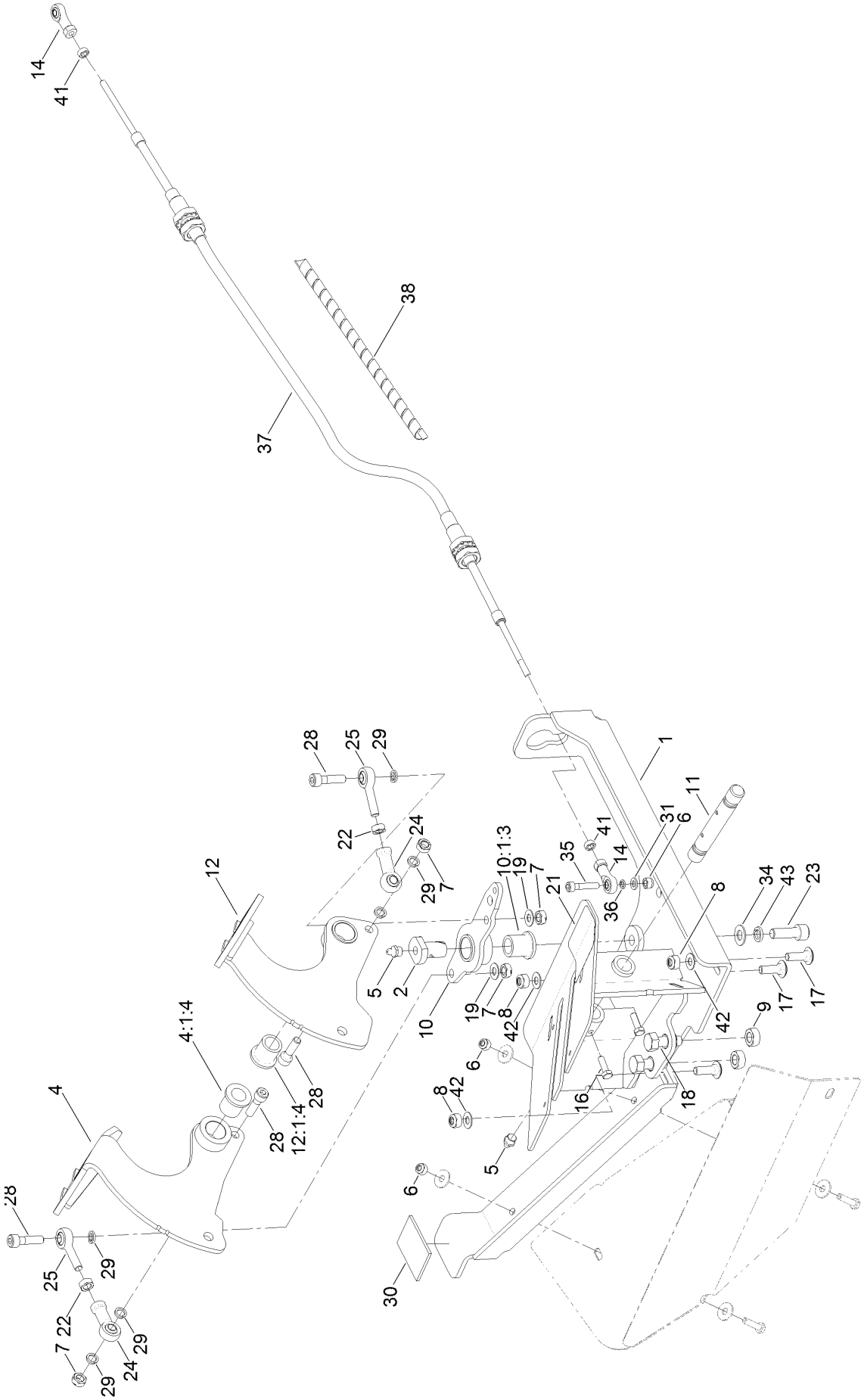

Pedal Control Assembly (continued)

Ref.	Part Number	Qty.	Description
1	111-7175-03	1	Pedal-Mounting
2	111-7122	1	Boss-Pedal, Link
4	111-7170-03	1	Forward Pedal ASM
4:1		1	Pedal-Traction, Forward ●■
4:1:4	953868	1	Bushing-Flange, Oilite
5	10-11-017	2	Fitting-Straight
6	09544	1	Nut-Nyloc
7	ZNB1H000U	4	Nut
8	09441	3	Nut-Hex, NI
9	09449	2	Nut
10	111-7068-03	1	Pedal Link ASM
10:1		1	Link-Pedal ●■
10:1:3	953868	1	Bushing-Flange, Oilite
11	111-1310	1	Pin-Control, Pedal
12	111-7171-03	1	Reverse Pedal ASM
12:1		1	Pedal-Traction, Reverse ●■
12:1:4	953868	1	Bushing-Flange, Oilite
14	111-4579	2	Rod End-Female/Female
16	09363	2	Screw-HH
17	09373	3	Bolt-Coach
18	09392	2	Screw-HH
19	09475	2	Washer
21	111-3567	1	Decal-Pedal, Operation
22	ZNH1H000U	2	Nut-Hex
23	ZCS1J030U	1	Screw-HSH
24	111-2896	2	Rod-End, Female
25	111-6147	2	Rod End
28	ZCS1H030U	4	Screw-Cap
29	111-6948	6	Washer-Spring
30	HY910808	1	Strip-Neoprene
31	09472	1	Washer-Plain
34	09479	1	Washer-Plain
35	111-4586	1	Screw-HSH
36	09474	1	Washer-Spring
37	111-7140	1	Cable-Transmission
38	111-6133	1	Guard-Spiral
41	09437	2	Nut
42	09267	3	Washer-Plain
43	09480	1	Washer-Lock

● Not illustrated

■ Not serviced separately

Fuel Tank and Storage Pod Assembly

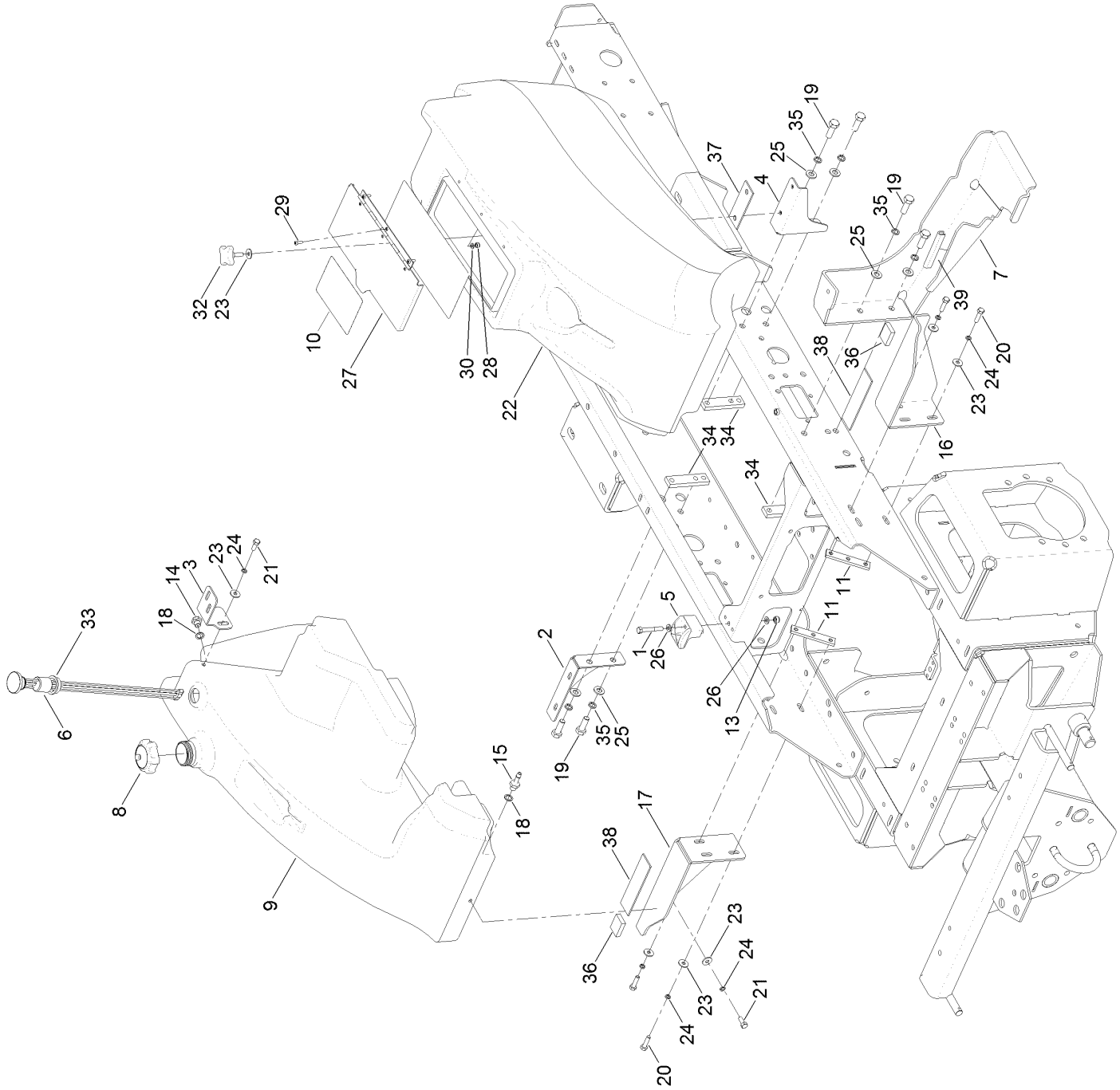

Fuel Tank and Storage Pod Assembly (continued)

Ref.	Part Number	Qty.	Description
1	09565	1	Screw-HH
2	111-3452-03	1	Bracket-Fuel Tank
3	111-3453-03	1	Bracket-Fuel Tank, Upper
4	111-3424-03	1	Bracket-Pod, Storage
5	107-4543	1	Clamp
6	104-5603	1	Gauge-Level, Fuel
7	111-7306-01	1	Step-Foot, Rev
8	111-3531	1	Cap-Fuel
9	111-3294	1	Tank-Fuel
10	111-8098	1	Decal-Warning, Inclines
11	111-3281	2	Bar-Nut
13	09441	1	Nut-Hex, NI
14	910352	1	Pipe-Return, Fuel
15	910351	1	Pipe-Suction, Fuel
16	111-3454-03	1	Support-Platform, LH
17	111-3455-03	1	Support-Platform, RH
18	111-3925	2	Washer-Fiber
19	ZDH1L035U	6	Screw-HH
20	09369	4	Screw-HH
21	09368	2	Screw-HH
22	111-3295	1	Pod-Storage
23	09267	9	Washer-Plain
24	03469	6	Washer-Spring
25	HY09485	6	Washer-Plain
26	ZWP1H000U	2	Washer-Plain
27	111-7242-03	1	Cover-Storage
28	09430	3	Nut-Nyloc
29	111-3381	3	Screw-HSBH
30	09470	3	Washer
32	111-3666	3	Handwheel
33	95-8972	1	Grommet
34	111-4490	3	Bar-Nut
35	09599	6	Washer-Lock
36	111-5386	2	Pad-Rubber
37	111-5388	1	Pad-Rubber, Storage Pod
38	HY910808	1	Strip-Neoprene
39	50-08-001	1	Edging-Rubber
99	70-07-067	1	Tape-Slip, Anti ●

● Not illustrated

Hood Assembly

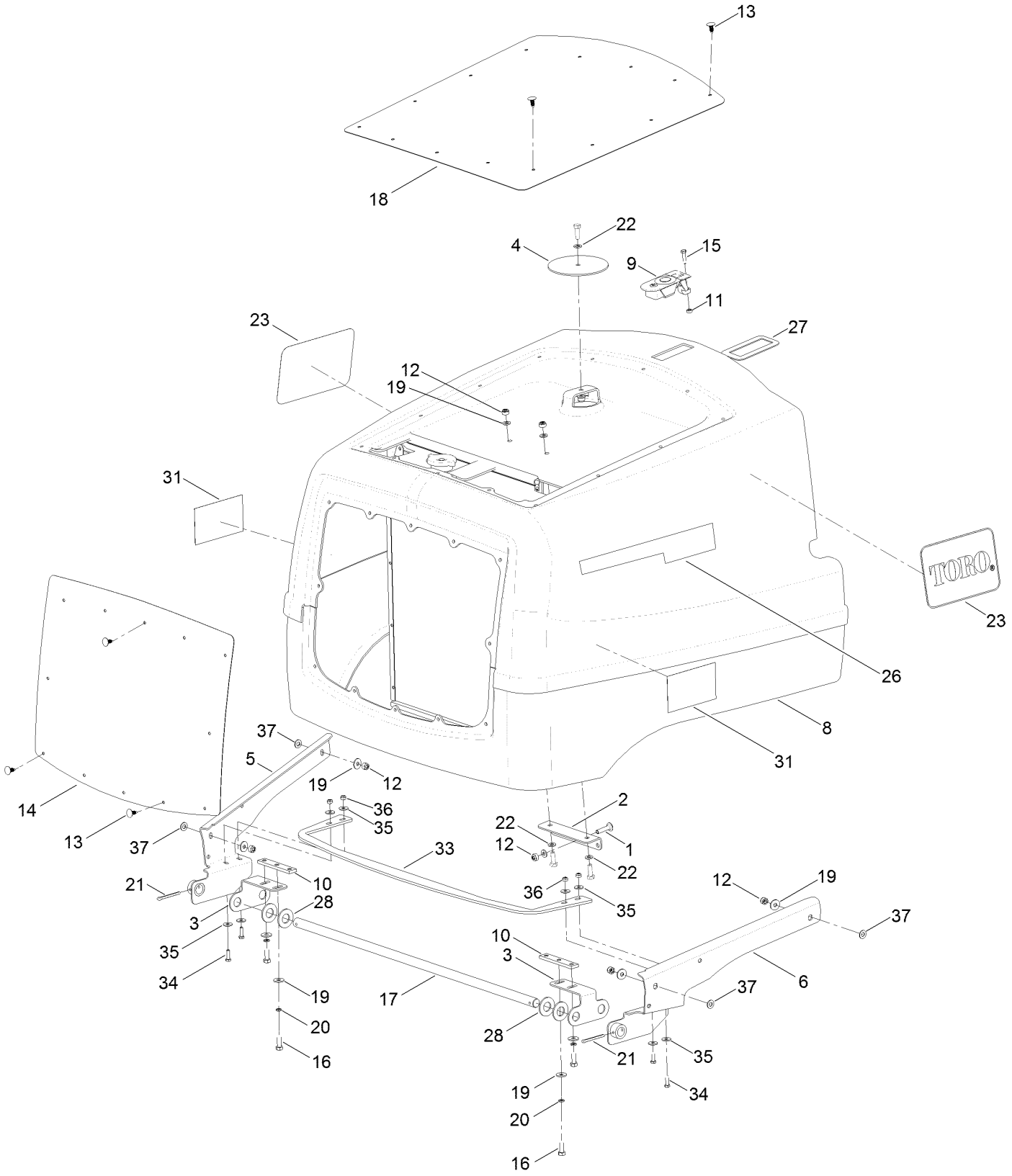

Hood Assembly (continued)

Ref.	Part Number	Qty.	Description
1	09369	1	Screw-HH
2	111-2111-03	1	Bracket-Engine, Cover
3	111-7483-03	2	Bracket, Hinge-Shaft
4	111-3557-03	1	Cover-Air, Intake
5	111-3490-03	1	Hinge-Cover, Engine (LH)
6	111-3491-03	1	Hinge-Cover, Engine (RH)
8	111-6920	1	Cover-Engine
9	950831	1	Latch-Sealed, Lever
10	111-3281	2	Bar-Nut
11	09437	1	Nut
12	09441	8	Nut-Hex, NI
13	117-2382	26	Plug-Plastic
14	111-6919-03	1	Screen-Rear
15	09364	1	Screw-HH
16	03162	4	Screw-HH
17	111-7482	1	Shaft-Hinge, Cover
18	111-6918-03	1	Screen-Top
19	09267	11	Washer-Plain
20	03469	4	Washer-Spring
21	74-11-003	2	Pin-Split
22	ZWP1H000U	4	Washer-Plain
23	111-3728	2	Decal
26	111-4976	2	Decal
27	111-4158-03	1	Plate-Support, Latch
28	09499	4	Washer
31	94-8099	2	Decal
33	111-8236-03	1	Plate-Tie, Cover
34	09363	4	Screw-HH
35	09262	8	Washer
36	09438	4	Nut-Nyloc
37	09475	4	Washer
99	111-7488	5	Seal-Cover, Screen ●

● Not illustrated

Roll-Over Protection System Assembly

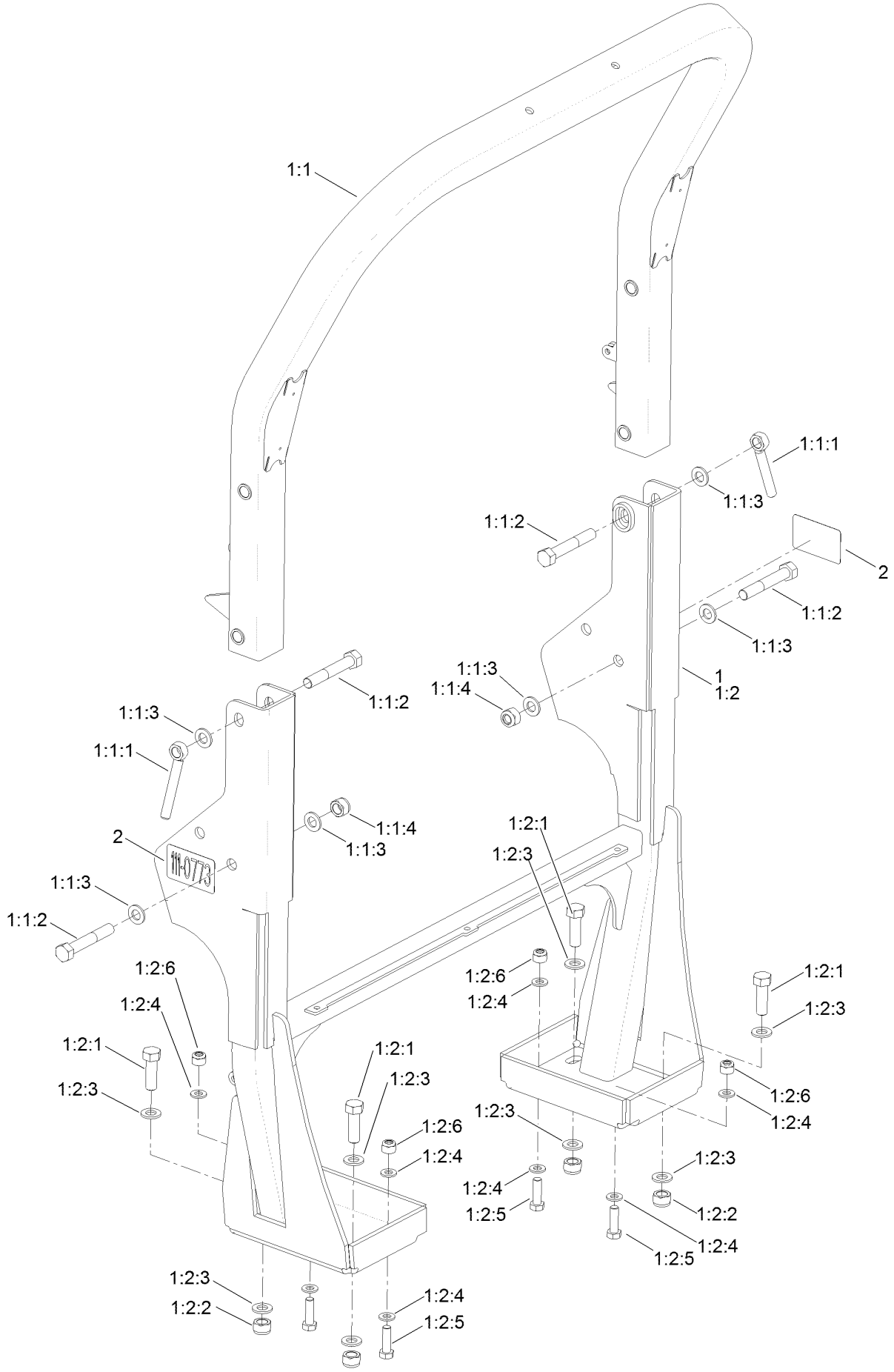

Roll-Over Protection System Assembly (continued)

Ref.	Part Number	Qty.	Description
1	111-7250	1	ROPS ASM
1:1	111-7236	1	Hoop-Upper, ROPS
1:1:1	956016	2	Nut-Hand
1:1:2	ZBH1P100U	4	Bolt
1:1:3	09491	6	Washer-Plain
1:1:4	09456	2	Nut
1:2	111-7238	1	ROPS-Lower
1:2:1	111-3484	4	Screw-HH
1:2:2	09456	4	Nut
1:2:3	09491	8	Washer-Plain
1:2:4	HY09485	8	Washer-Plain
1:2:5	ZDH1L040U	4	Screw-HH
1:2:6	ZNN1L000U	4	Nut-Nyloc
2	111-0773	2	Decal

Hydraulic Oil Tank Assembly

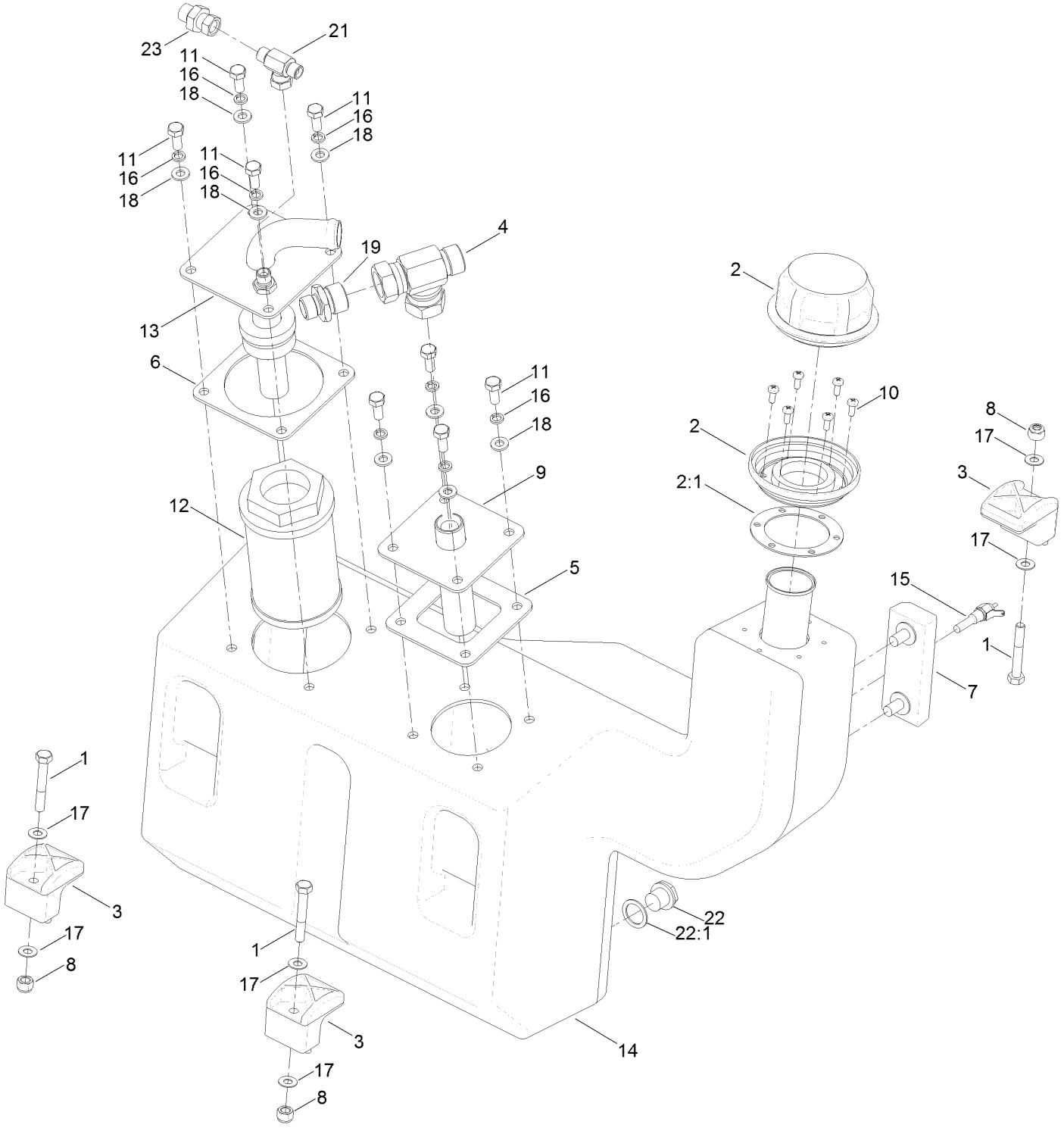

Hydraulic Oil Tank Assembly (continued)

Ref.	Part Number	Qty.	Description
1	09565	3	Screw-HH
2	HY910601	1	Cap-Breather, Filler
2:1	910648	1	Cap-Gasket, Filler
3	107-4543	3	Clamp
4	60-06-009	1	Adaptor-Tee
5	111-3387	1	Gasket-Flange, Return
6	111-3386	1	Gasket-Flange, Suction
7	65-06-018	1	Gauge-Level, Oil
8	09442	3	Nut
9	111-3230-03	1	Flange-Return
10	09634	6	Screw-PPH, HD
11	09368	8	Screw-HH
12	10-06-025	1	Filter-Suction
13	111-4900-03	1	Flange-Suction
14	111-3034	1	Tank-Oil, HYD
15	940852	1	Switch-Temperature
16	03469	8	Washer-Spring
17	09475	6	Washer
18	ZWP1H000U	8	Washer-Plain
19	09-06-201	1	Adaptor
21	60-06-011	1	Tee-BSP
22	20-06-207	1	Plug-Magnetic
22:1	111-7925	1	Washer-Fiber
23	65-06-331	1	Adaptor
99	10-11-034	1	Clamp-Hose, Hi-Torque ●

● Not illustrated

Rear Transmission Block Assembly

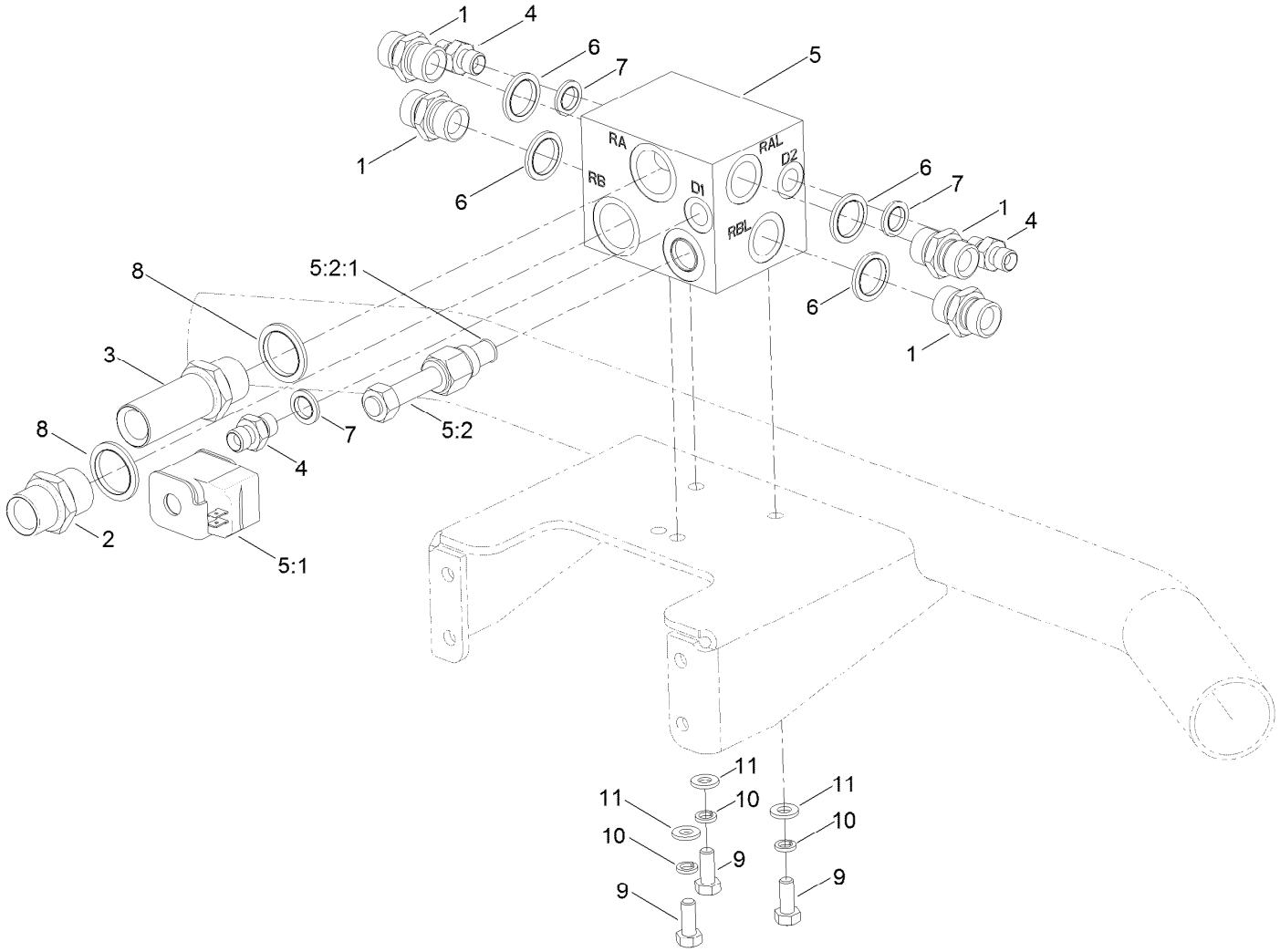

Rear Transmission Block Assembly (continued)

Ref.	Part Number	Qty.	Description
1	10-06-078	4	Adaptor-BSPP
2	10-06-044	1	Adaptor-BSP
3	111-7494	1	Adaptor-BSP
4	10-06-085	3	Adaptor
5	924687	1	Manifold-Transmission, Rear
5:1	910627	1	Coil-Solenoid
5:2	924688	1	Valve-Solenoid
5:2:1	910642	1	Seal Kit
6	10-06-032	4	Seal-Dowty
7	10-06-030	3	Seal-Dowty
8	10-06-033	2	Seal-Dowty
9	09368	3	Screw-HH
10	03469	3	Washer-Spring
11	ZWP1H000U	3	Washer-Plain

Loom Kit

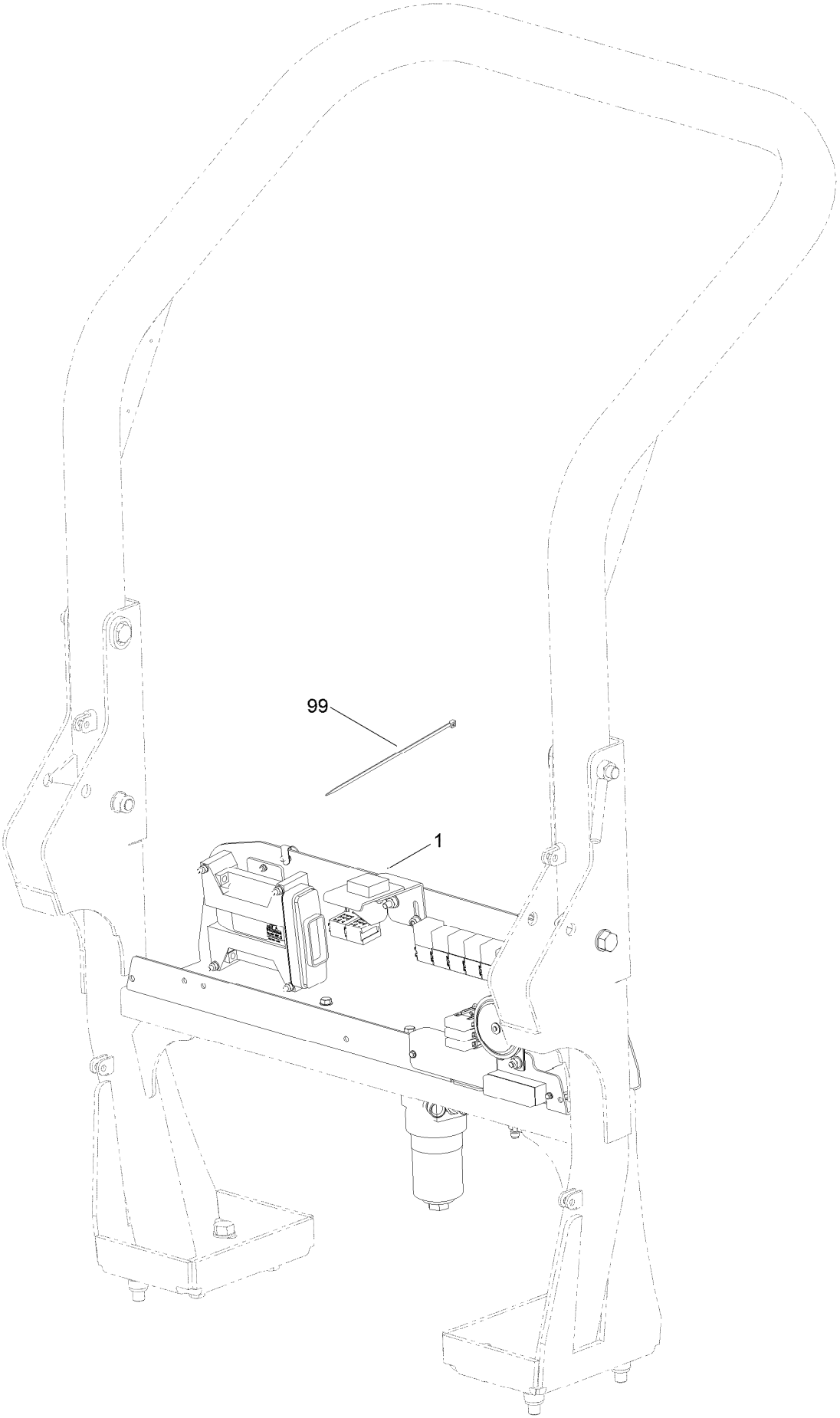

Loom Kit (continued)

Ref.	Part Number	Qty.	Description
1		1	Loom Kit ●
99	HY3966	30	Tie-Cable

● Not serviced separately

Electrical Assembly

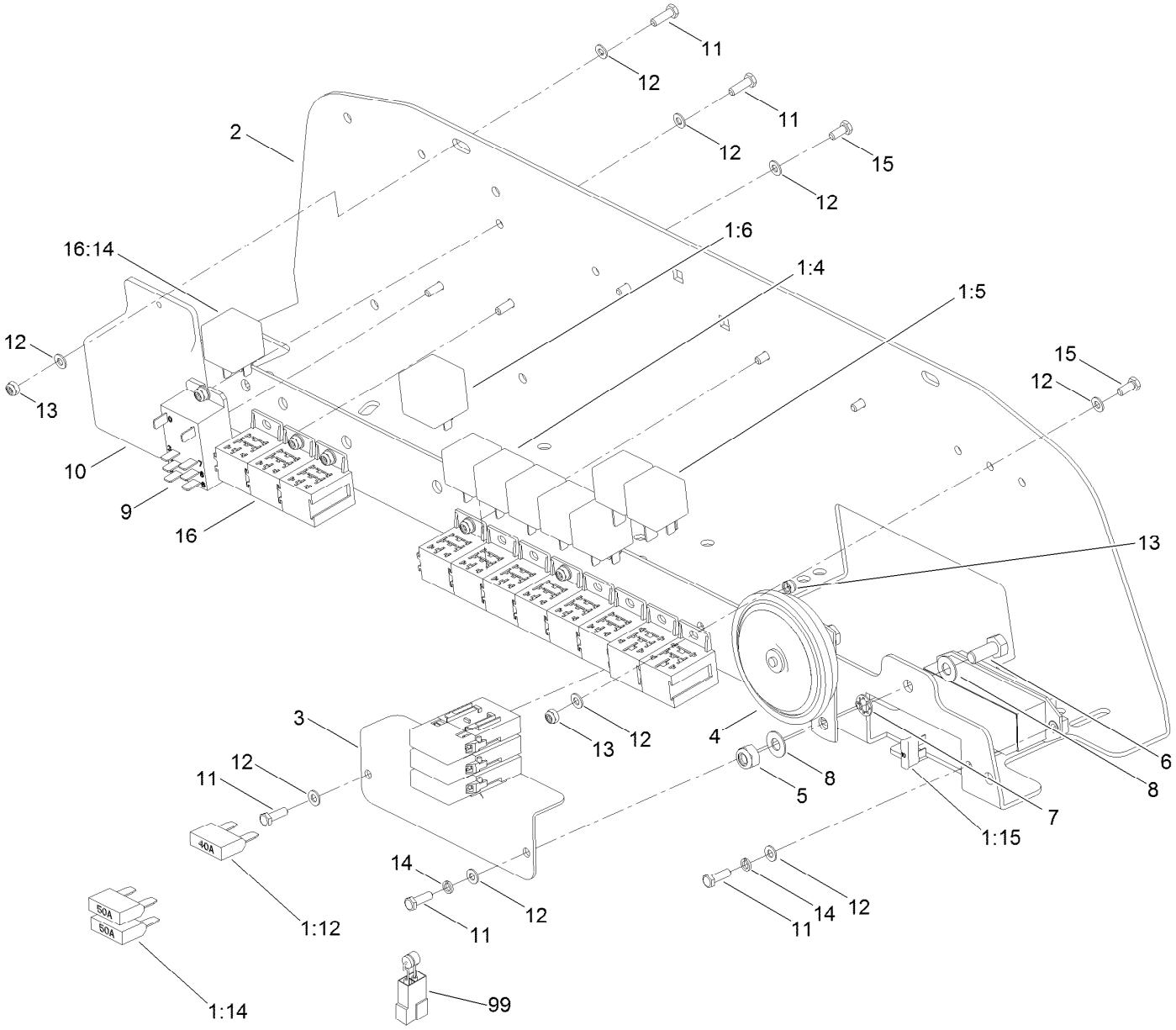

Electrical Assembly (continued)

Ref.	Part Number	Qty.	Description
1	111-6191	1	Harness-Wiring ●
1:4	111-0336	5	Relay-30A
1:5	924625	2	Relay-70A
1:6	924722	1	Module Delay, Seat
1:12	111-2898	1	Fuse-40A
1:14	995714	2	Fuse-50A
1:15	70-09-026	4	Fuse-10A
2	134-0435-03	1	Plate-Base, Electrical
3	111-4842-03	1	Bracket-Fuse
4	70-09-108	1	Horn ASM
5	09441	1	Nut-Hex, NI
6	09368	1	Screw-HH
7	09476	1	Washer-Shakeproof
8	09475	2	Washer
9	995713	1	Relay-Neutral, Start
10	70-01-512	1	Timer ASM
11	ZDH1E016U	7	Screw-HH
12	09470	22	Washer
13	09430	10	Nut-Nyloc
14	09644	2	Washer-Spring
15	ZDH1E012U	5	Screw-HH
16	111-7412	1	Deck Cutout Relay ASM
16:14	111-0336	1	Relay-30A
99	950868	5	Diode Assembly

● Not illustrated

Main Frame, Chassis, Front Wheel and Battery Assembly

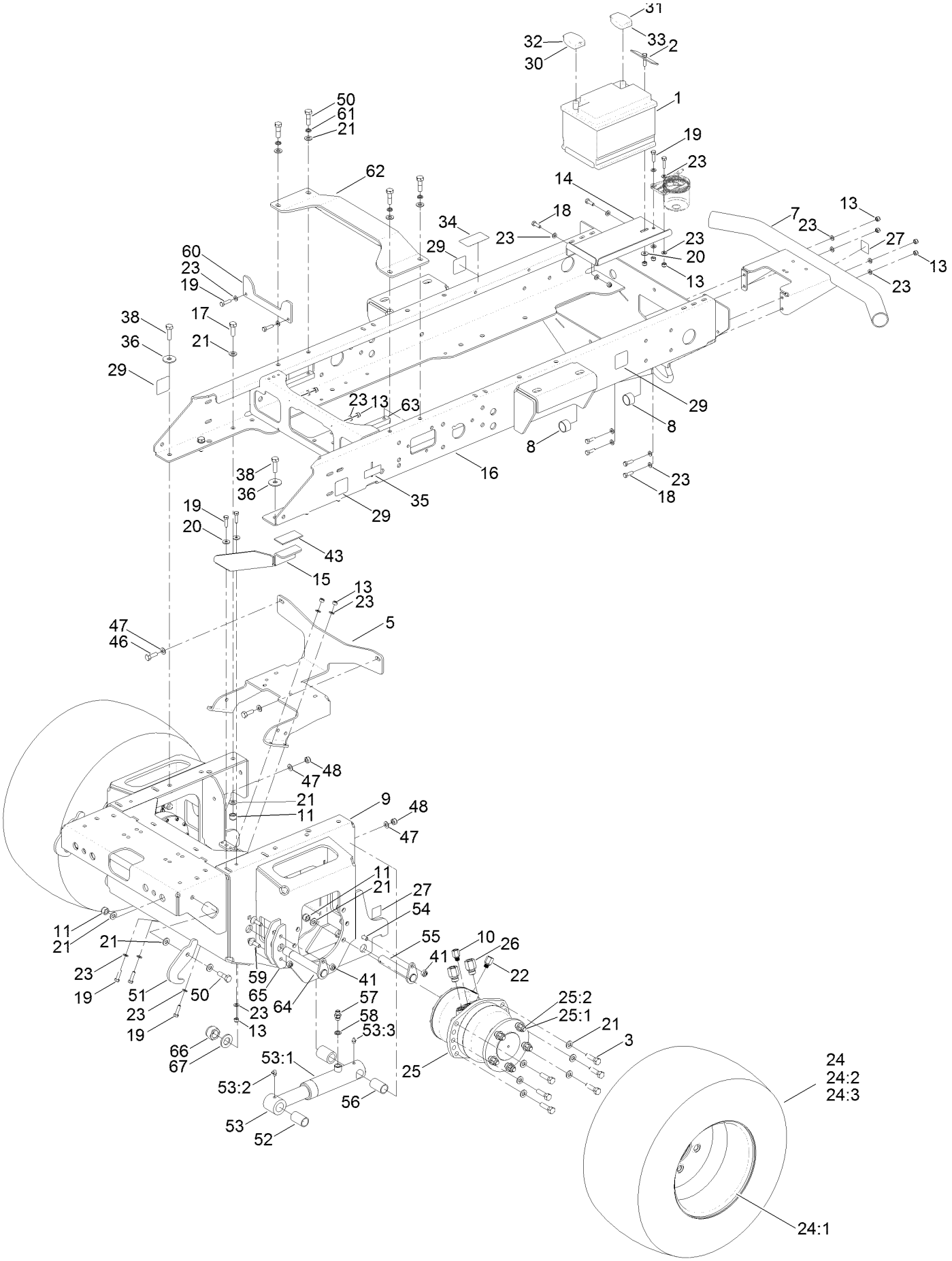

Main Frame, Chassis, Front Wheel and Battery Assembly (continued)

Ref.	Part Number	Qty.	Description
1	70-09-015	1	Battery
2	70-01-340	1	Retainer-Battery
3	ZBH1L045U	12	Screw-HH
5	111-6791-03	1	Bracket-Manifold, Cutter
7	111-3110-03	1	Bumper-Rear
8	65-07-051	2	Bushing
9	111-4668-03	1	Chassis-Front
10	111-3509	2	Adaptor
11	ZNN1L000U	20	Nut-Nyloc
13	09441	17	Nut-Hex, NI
14	111-2599-03	1	Plate-Mount, Battery
15	111-3217-03	1	Support-Platform, Front (LH)
16	111-2100-03	1	Chassis-Rear
17	ZDH1L035U	4	Screw-HH
18	03162	6	Screw-HH
19	09369	10	Screw-HH
20	09267	3	Washer-Plain
21	HY09485	44	Washer-Plain
22	111-3538	2	Adaptor
23	ZWP1H000U	30	Washer-Plain
24	111-6878	2	Wheel ASM
24:1	111-6879	1	Rim-Wheel
24:2	74-07-012	1	Tube-Inner ●
24:3	74-07-027	1	Tire
25	111-6761	2	HYD Motor ASM
25:1	111-7059	5	Stud-Wheel
25:2	74-07-016	5	Nut
26	111-3529	4	Adaptor
27	70-13-072	3	Decal
29	950832	4	Decal
30	70-09-171	1	Terminal-Positive
31	70-09-172	1	Terminal-Negative
32	111-3690	1	Cable-Battery, Positive
33	70-09-170	1	Cable-Battery, Negative
34	950889	1	Decal-Warning
35	111-3901	1	Decal-Transmission, Oil
36	111-9529	2	Plate-Securing
38	ZDH1L040U	2	Screw-HH
41	ZNN1J000U	8	Nut-Hex, NI
43	HY910808	1	Strip-Neoprene
46	09392	2	Screw-HH
47	09479	4	Washer-Plain
48	ZNN1J000U	2	Nut-Hex, NI
50	63-11-010	6	Bolt-HH
51	111-4888-01	2	Plate-Latch, Front
52	25-07-007	4	Bushing-Tension
53	111-4786	2	HYD Cylinder ASM
53:1	50-06-013	1	Seal Kit ●
53:2	63-07-027	1	Zerk-Grease, BSP (90 DEG)
53:3	10-11-017	1	Fitting-Straight
54	15-11-003	2	Bolt-CARR
55	994560	2	Pin
56	111-5300	2	Spacer-Ram
57	10-06-085	2	Adaptor
58	10-06-030	2	Seal-Dowty
59	09738	6	Bolt-Carriage
60	111-5538-03	1	Location-Plate
61	09599	4	Washer-Lock
62	111-7065-03	1	Brace
63	111-7094	2	Brace-Chassis
64	111-8008	2	Pin-Arm, ASM
65	111-8007-03	2	Plate-Wear
66	ZNN1X000U	2	Nut-Hex, Nyloc
67	09555	2	Washer

● Not illustrated

Transmission Manifold Assembly

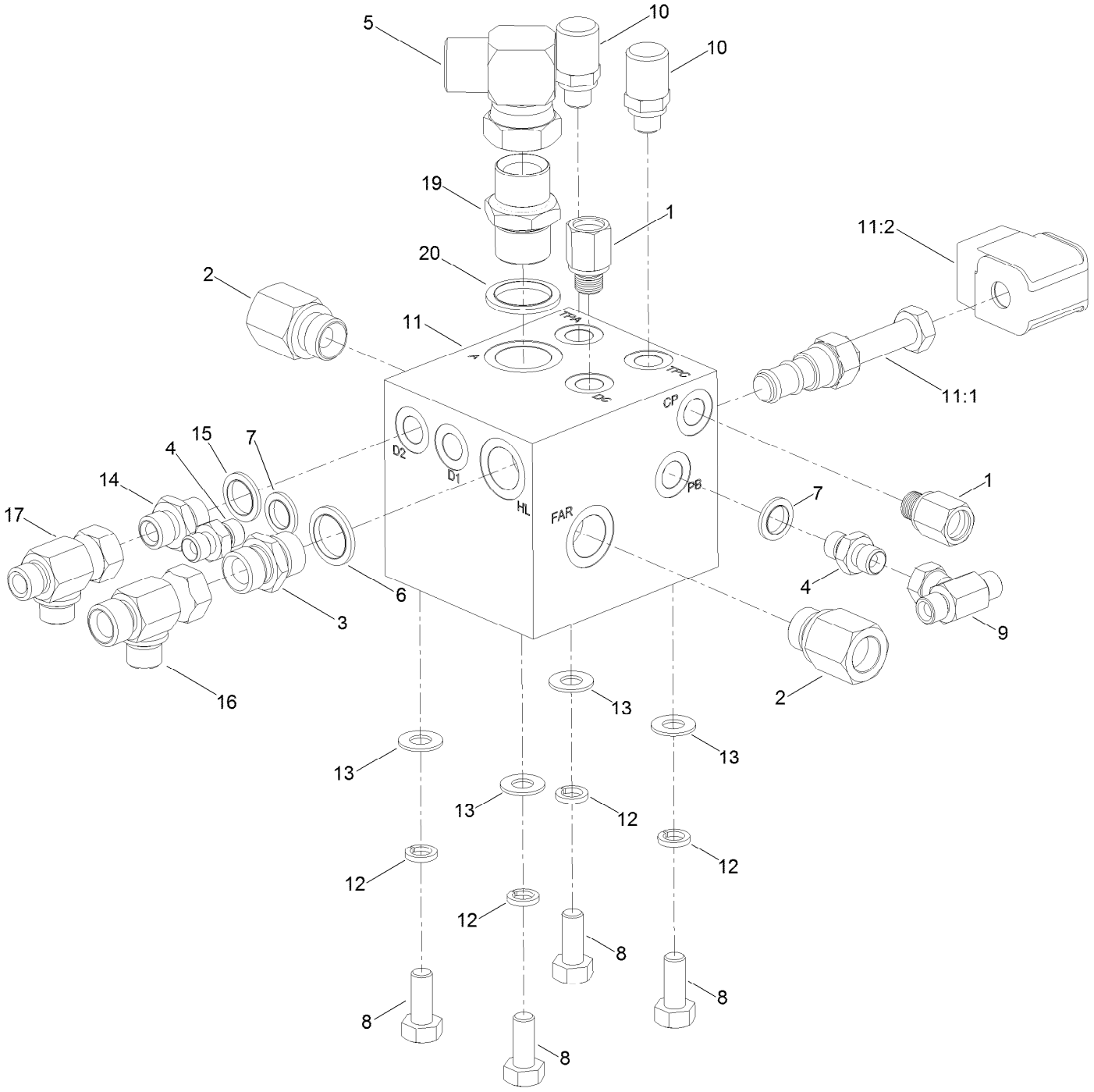

Transmission Manifold Assembly (continued)

Ref.	Part Number	Qty.	Description
1	111-3538	2	Adaptor
2	111-3529	2	Adaptor
3	10-06-078	1	Adaptor-BSPP
4	10-06-085	2	Adaptor
5	111-4443	1	Elbow-BSP
6	10-06-032	1	Seal-Dowty
7	10-06-030	2	Seal-Dowty
8	09395	4	Screw-HH
9	60-06-011	1	Tee-BSP
10	910615	2	Point-BSPP
11	111-2555	1	Manifold-Transmission

Ref.	Part Number	Qty.	Description
11:1	111-3533	1	Valve-Solenoid
11:1:1	910633	1	Seal Kit ●
11:2	910627	1	Coil-Solenoid
12	09480	4	Washer-Lock
13	09479	4	Washer-Plain
14	10-06-042	1	Adaptor-BSPP
15	10-06-031	1	Seal-Dowty
16	953732	1	Tee-BSP
17	20-06-203	1	Adaptor-Tee
19	10-06-044	1	Adaptor-BSP
20	10-06-033	1	Seal-Dowty

● Not illustrated

Cutter Manifold Assembly

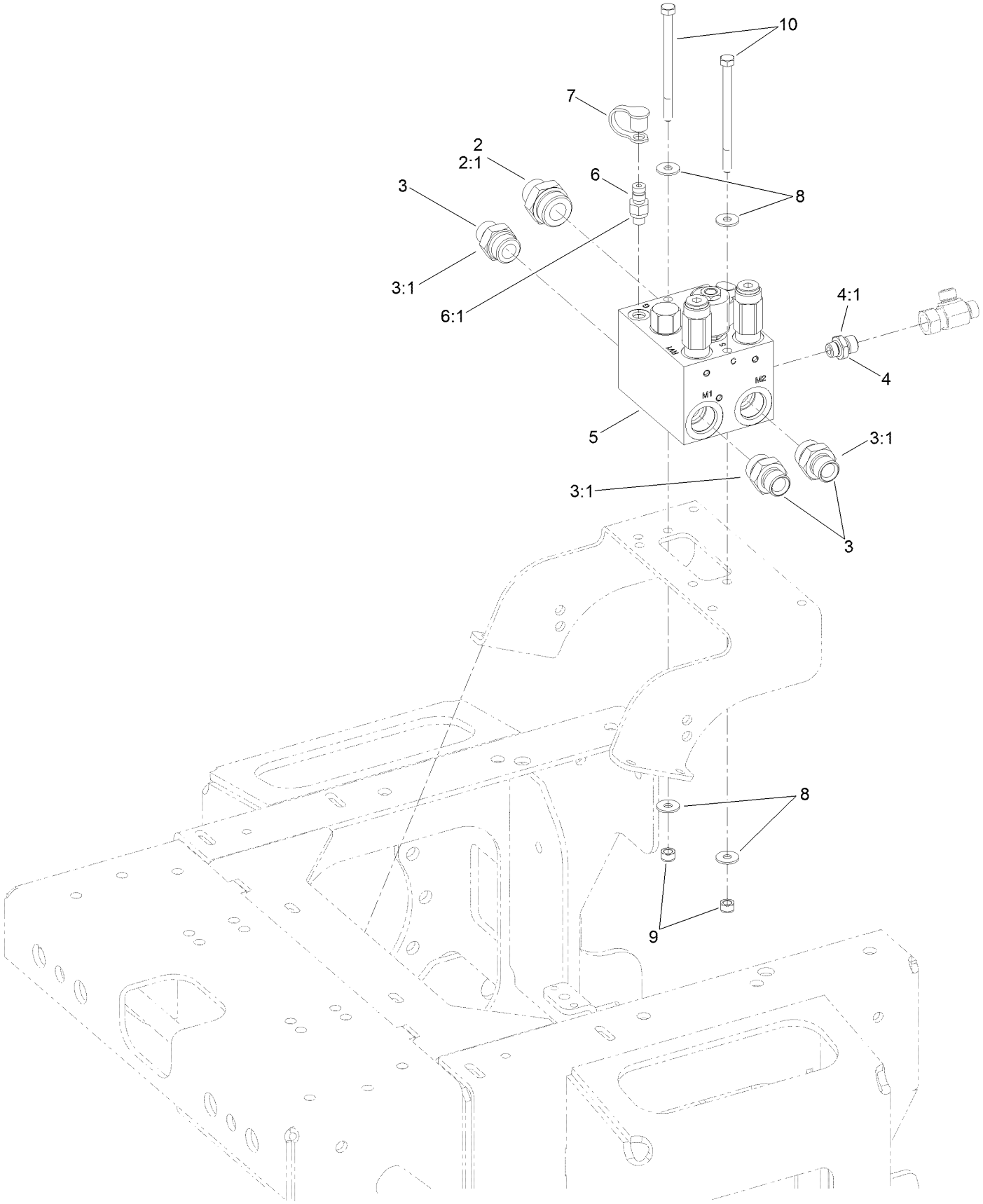

Cutter Manifold Assembly (continued)

Ref.	Part Number	Qty.	Description
2	70-06-063	1	Adaptor
2:1	70-06-169	1	Seal-O Ring O Ring
3	111-4787	3	Fitting-Straight
3:1	70-06-168	1	Seal-O Ring
4	111-4788	1	Fitting-Straight
4:1	70-06-165	1	Seal-O Ring
5	115-8467	1	PTO Manifold ASM

Ref.	Part Number	Qty.	Description
6	354-77	1	Fitting-Quick
6:1	237-78	1	O-Ring
7	354-79	1	Cap-Dust
8	09267	4	Washer-Plain
9	09441	2	Nut-Hex, NI
10	ZBH1H120U	2	Bolt

Hydraulic PTO Manifold Assembly No. 115-8467

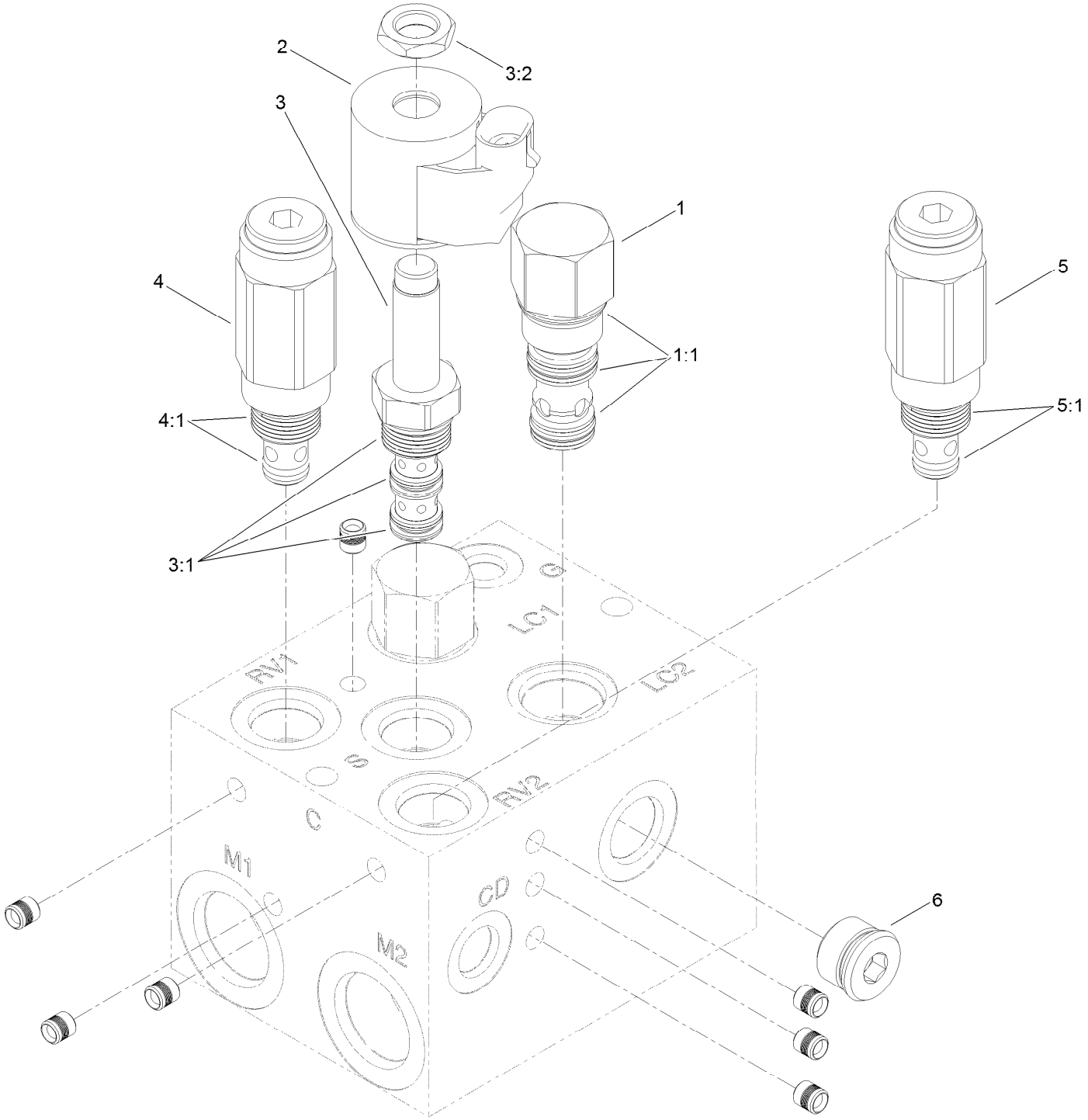

Hydraulic PTO Manifold Assembly No. 115-8467 (continued)

Ref.	Part Number	Qty.	Description
1	105-9153	2	Element-Logic, Vented
1:1	119-2159	1	Seal Kit
2	105-9333	1	Coil-12Vdc
3	110-0494	1	Valve-Solenoid
3:1	110-8773	1	Seal Kit
3:2	110-2634	1	Nut-Coil

Ref.	Part Number	Qty.	Description
4	114-5510	1	Valve-Relief, 3000 PSI
4:1	110-8773	1	Seal Kit
5	114-5512	1	Valve-Relief, 600 PSI
5:1	105-9156	1	Seal Kit
6	106-1027	1	Plug

Transmission and Tandem Pump Assembly

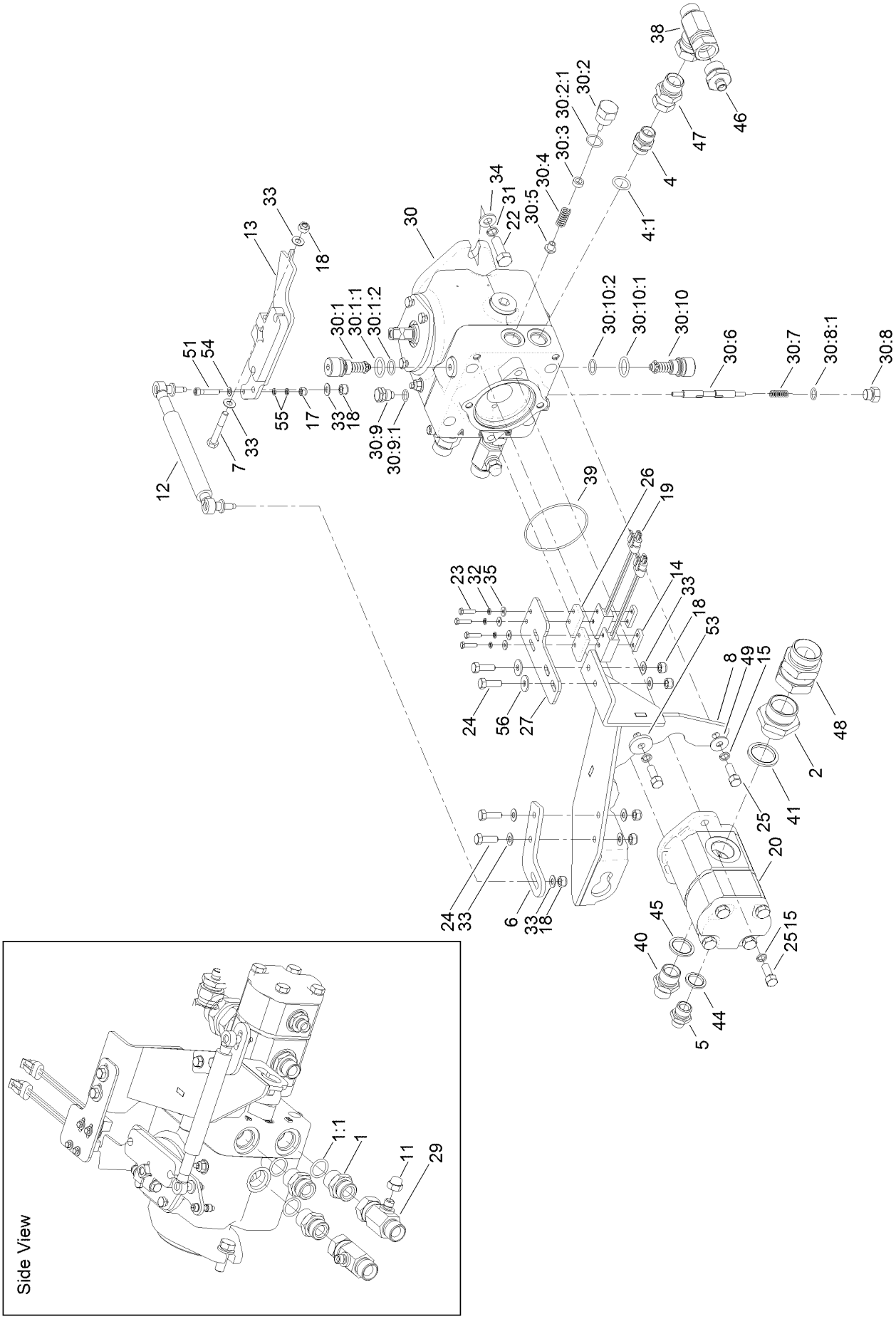

Transmission and Tandem Pump Assembly (continued)

Ref.	Part Number	Qty.	Description
1	70-06-050	3	Adaptor-Boss
1:1	70-06-168	1	Seal-O Ring
2	15-06-109	1	Adaptor
4	63-06-104	1	Adaptor-BSP
4:1	63-06-111	1	Seal-O Ring
5	10-06-043	1	Adaptor
6	111-6853-03	1	Adjuster-Damper
7	09565	1	Screw-HH
8	111-6456-03	1	Bracket-Control, Pump
11	66-06-003	1	Cap-BSP
12	111-7130	1	*obs* Damper
13	111-6814	1	Lever-Control, Pump
14	111-3336	2	Bar-Switch, Proximity
15	09273	4	Washer-Spring
17	09544	1	Nut-Nyloc
18	09441	7	Nut-Hex, NI
19	105-0023	2	Switch-Proximity
20	111-4973	1	HYD Tandem Pump ASM
20:99	70-06-153	1	Seal Kit ●
22	ZDH1L035U	2	Screw-HH
23	ZDH1E020U	4	Screw-HH
24	03162	4	Screw-HH
25	HY103653	4	Screw-HH
26	111-3676	2	Spacer-Switch, Proximity
27	111-3260-03	1	Adjuster-Switches
29	111-3639	2	Tee-BSP
30	111-6774	1	Pump-Transmission
30:1	111-3379	1	Valve-Pressure Relief, 345 Bar
30:1:1	111-4906	1	O-Ring
30:1:2	111-4925	1	O-Ring
30:2	111-3378	1	Plug-Charge Pressure Relief
30:2:1	111-4920	1	O-Ring, Charge Relief Plug
30:3	111-4908	1	Shim Kit ASM
30:4	111-4918	1	Spring-Charge, Prv
30:5	111-4919	1	Poppet-Charge, Prv
30:6	111-3380	1	Valve-Flushing, Loop
30:7	111-4917	1	Spring-Valve, Loop (Flushing)
30:8	111-4916	1	Plug-Loop Flushing Valve
30:8:1	111-4928	1	O-Ring
30:9	111-6776	1	Plug-Flush
30:9:1	111-4928	1	O-Ring
30:10	111-6775	1	Valve-Pressure Relief, 300 Bar
30:10:1	111-4906	1	O-Ring
30:10:2	111-4925	1	O-Ring
31	09599	2	Washer-Lock
32	09644	4	Washer-Spring
33	09475	10	Washer
34	HY09485	2	Washer-Plain
35	09257	4	Washer
38	60-06-009	1	Adaptor-Tee
39	70-06-028	1	O-Ring
40	994626	1	Adaptor-BSPP
41	09-06-214	1	Seal-Dowty
44	10-06-032	1	Seal-Dowty
45	10-06-033	1	Seal-Dowty
46	767606	1	Adaptor-BSPP
47	111-5049	1	Fitting-Straight
48	111-5150	1	Fitting-Straight
49	HY03355	1	Washer-Plated
51	111-4586	1	Screw-HSH
53	65-01-559	1	Washer-Space
54	ZWP1F000U	1	Washer-Plain
55	09474	2	Washer-Spring
56	09267	2	Washer-Plain

● Not illustrated

Control Panel Assembly

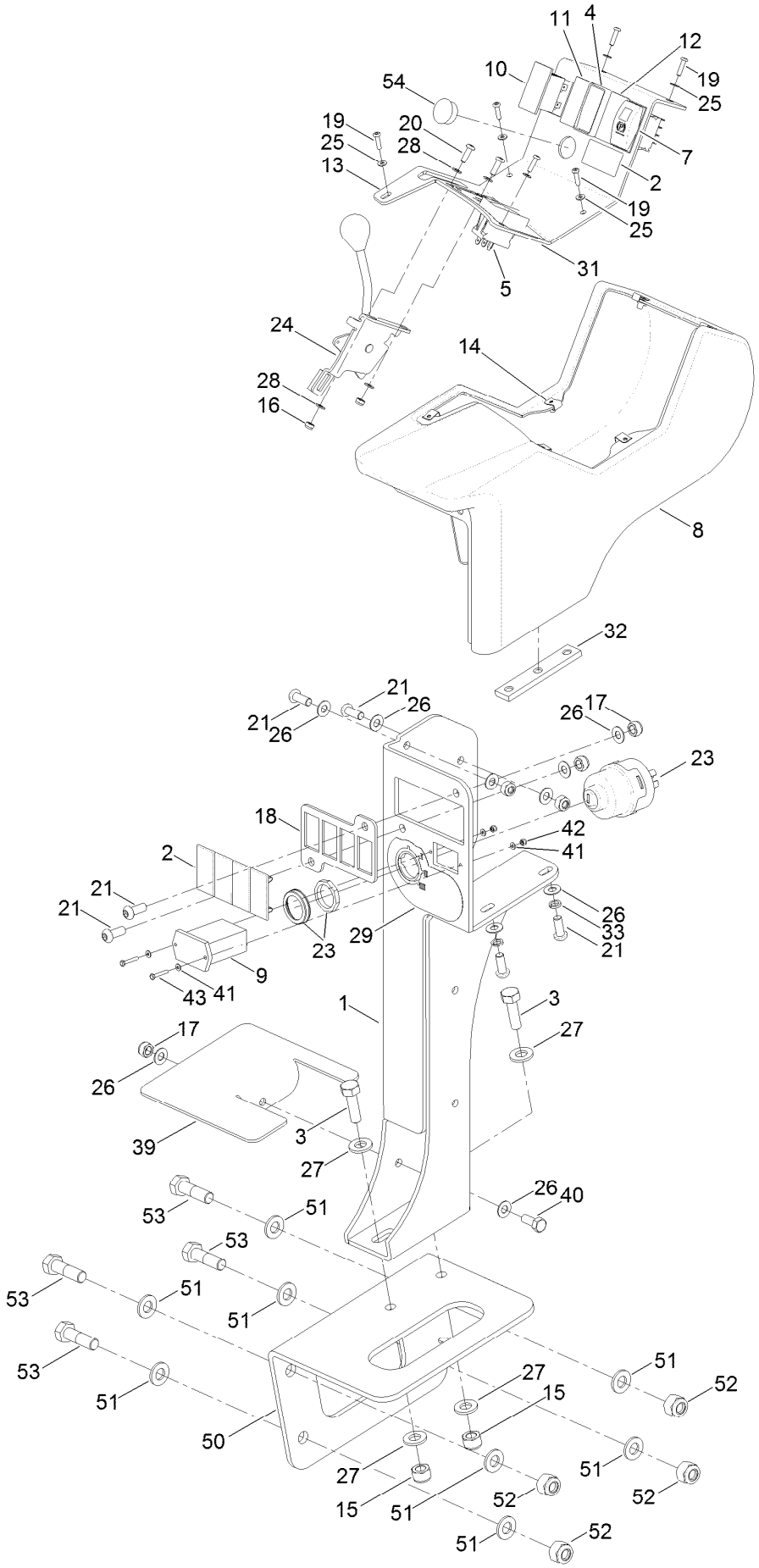

Control Panel Assembly (continued)

Ref.	Part Number	Qty.	Description
1	111-8496-03	1	Control Arm ASM
2	111-2337	5	Blank-Switch
3	09394	2	Bolt
4	111-4892	1	Switch-Cutters
5	111-7101	1	Switch-Lift, Lower
7	111-2254	1	Switch-Parking Brake, On-None-On
8	111-3004	1	Pod-Control
9	75-6820	1	Hourmeter
10	111-2333	1	Indicator-Illuminated
11	111-2334	1	Indicator-Illuminated
12	111-3026	1	Indicator-Illuminated
13	111-5229-03	1	Panel-Instrument
14	111-3079	6	U-Nut
15	09447	2	Nut
16	09430	2	Nut-Nyloc
17	09441	5	Nut-Hex, NI
18	111-8494-03	1	Plate-Switch
19	111-3473	6	Screw-Button
20	111-3381	2	Screw-HSBH
21	ZHS1H020U	6	Screw-HSBH
23	74-09-009	1	Switch-Ignition

Ref.	Part Number	Qty.	Description
23:1	74-09-017	1	Key-Ignition ●
23:2	74-09-010	1	Switch-Cover ●
24	111-7090	1	Cable-Throttle
25	09658	6	Washer
26	09475	10	Washer
27	HY09485	4	Washer-Plain
28	09470	4	Washer
29	111-3344	1	Decal-Switch, Ignition
31	111-5233	1	Decal-Panel, Control
32	111-3281	1	Bar-Nut
33	03469	2	Washer-Spring
39	111-5239-03	1	Plate-Filler
40	09368	1	Screw-HH
41	HY09697	4	Washer-Plain
42	HY09698	2	Nut-Nyloc
43	09696	2	Setscrew
50	111-5033-03	1	Plate-Mounting
51	ZWP1L000U	8	Washer-Plain
52	ZNN1L000U	4	Nut-Nyloc
53	09415	4	Screw-HH
54	111-5599	1	Plug-Tube

● Not illustrated

Filter Assembly

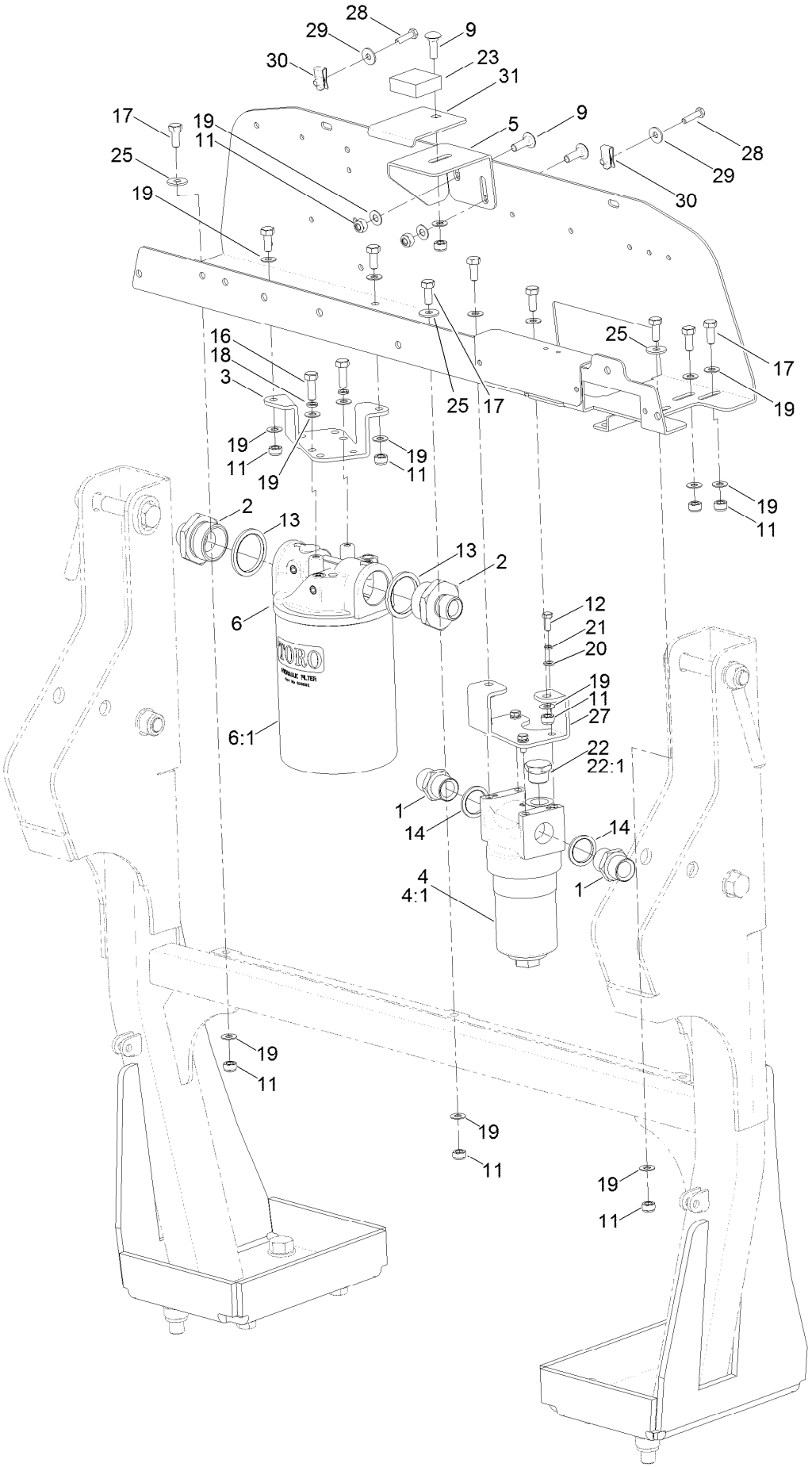

Filter Assembly (continued)

Ref.	Part Number	Qty.	Description
1	10-06-044	2	Adaptor-BSP
2	25-06-050	2	Adaptor
3	111-3485-03	1	Bracket-Filter, Oil
4	924708	1	Pressure Filter ASM
4:1	924709	1	Element-Filter, Pressure
4:2	924710	1	Indicator-Filter, Pressure ●
5	111-6095-03	1	Plate-Latch, Bulkhead
6	111-7508	1	Return Filter ASM
6:1	924692	1	Element-Filter
9	09373	3	Bolt-Coach
11	09441	12	Nut-Hex, NI
12	09362	4	Screw-HH
13	10-06-035	2	Seal-Dowty
14	10-06-033	2	Seal-Dowty
16	03162	2	Screw-HH
17	09368	9	Screw-HH
18	03469	2	Washer-Spring
19	09475	20	Washer
20	09472	4	Washer-Plain
21	09474	4	Washer-Spring
22	111-3926	1	Plug
22:1	63-06-111	1	Seal-O Ring
23	488023	1	Pad-Foam, Short
25	09267	3	Washer-Plain
27	111-5039-03	1	Bracket-Filter, Charge
28	09364	2	Screw-HH
29	09262	2	Washer
30	410076	2	Nut
31	111-6096-03	1	Plate-Latch, Bonnet

● Not illustrated

Transmission Hydraulic Circuit Assembly

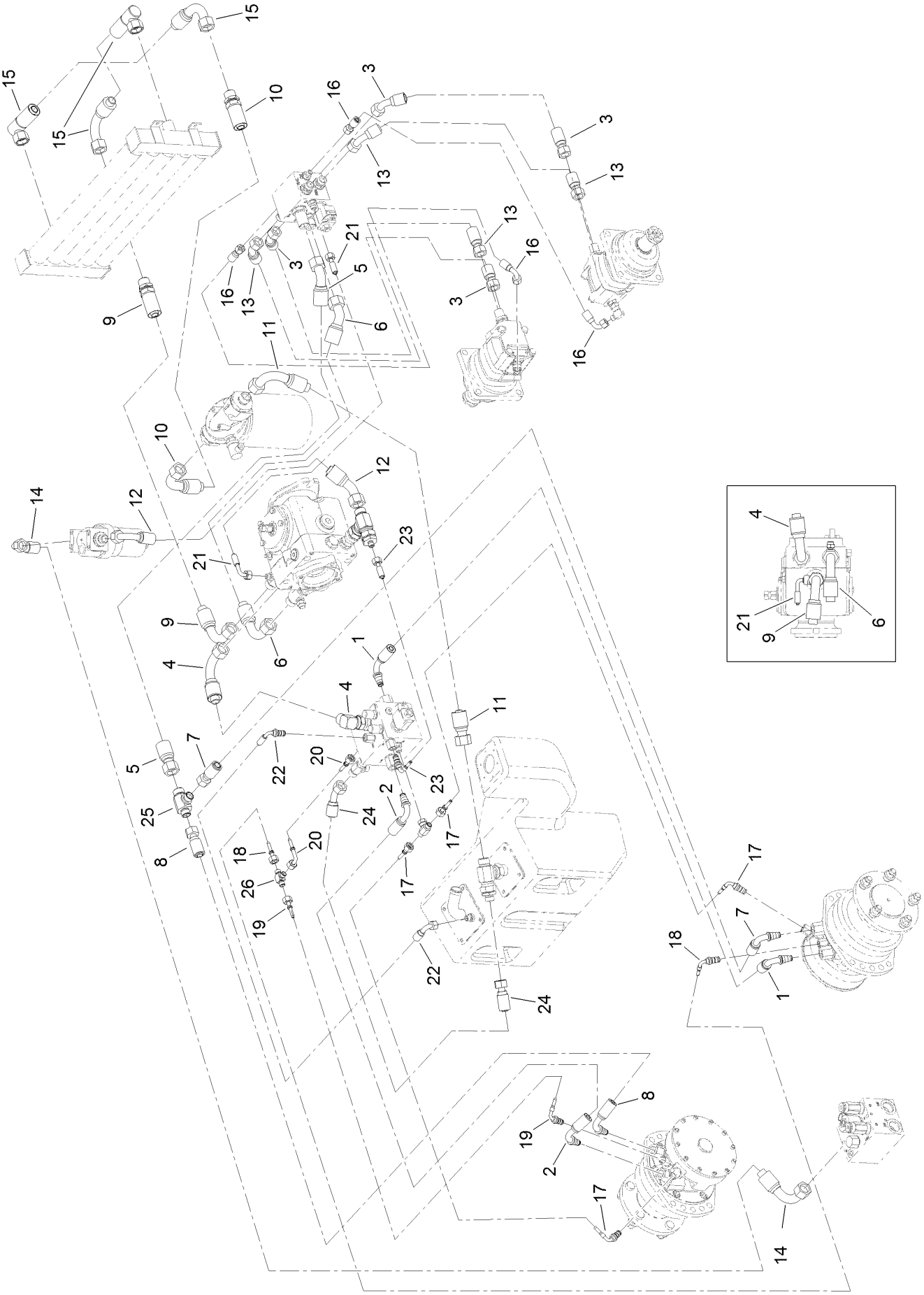

Transmission Hydraulic Circuit Assembly (continued)

Ref.	Part Number	Qty.	Description
1	111-4473	1	Hose
2	111-5521	1	Hose
3	111-3576	2	Hose
4	111-5525	1	Hose
5	111-3578	1	Hose
6	111-4479	1	Hose
7	111-5524	1	Hose
8	111-4477	1	Hose
9	111-4478	1	Hose
10	111-3587	1	Hose
11	111-3588	1	Hose
12	111-4959	1	Hose
13	111-3595	2	Hose
14	111-4960	1	Hose
15	111-3599	2	Hose
16	111-3604	2	Hose
17	111-5523	2	Hose
18	111-3606	1	Hose
19	111-3607	1	Hose
20	111-4480	1	Hose
21	111-4481	1	Hose
22	111-3619	1	Hose
23	111-5962	1	Hose
24	111-4969	1	Hose
25	111-3642	1	Tee-BSP
26	30-06-201	1	Tee

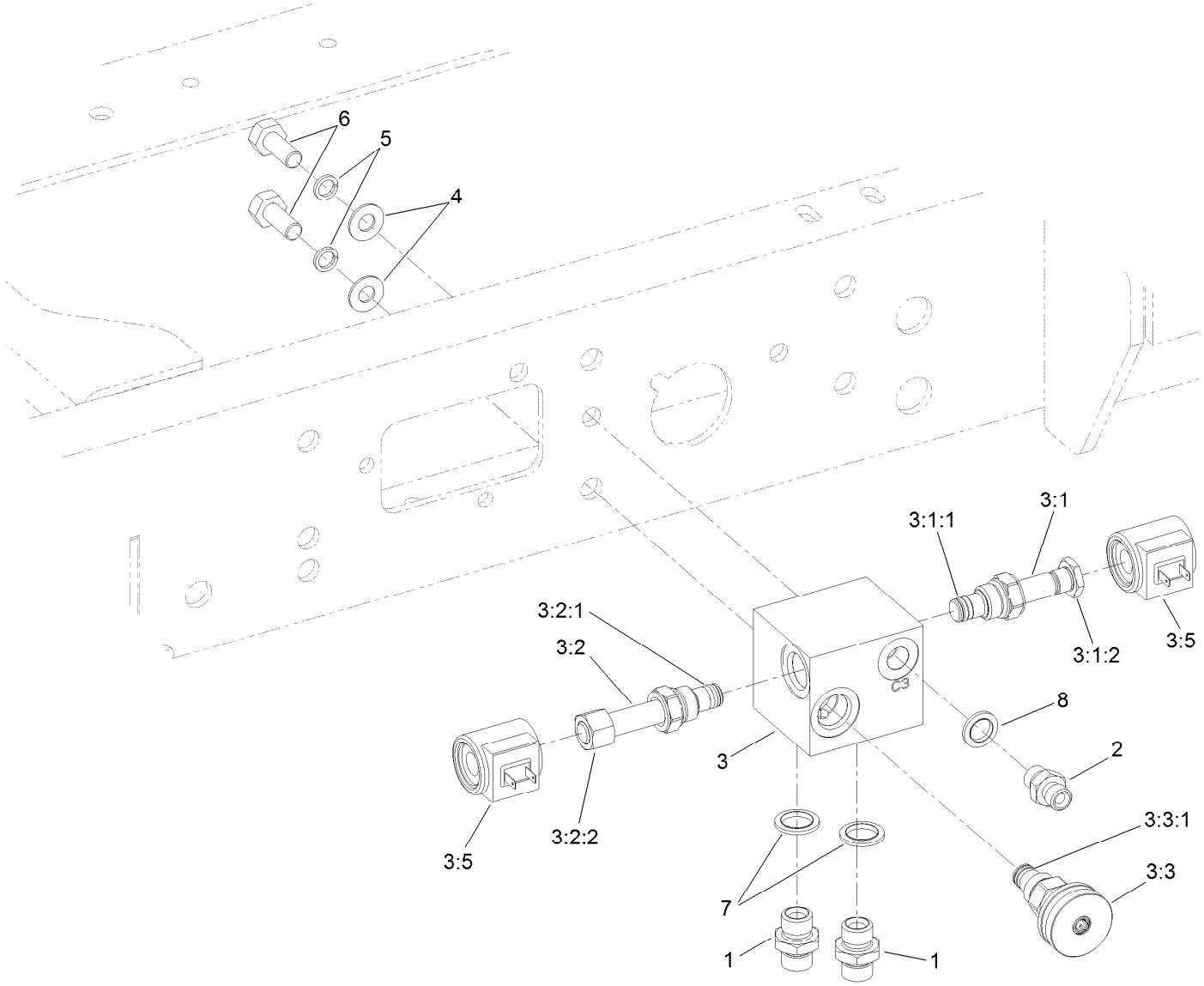

Lift Manifold Assembly

Ref.	Part Number	Qty.	Description
1	10-06-042	2	Adaptor-BSPP
2	940691	1	Adaptor-BSPP
3	111-5236	1	Manifold ASM (Deck Lift)
3:1	112-9206	1	Solenoid Valve ASM
3:1:1	105-9156	1	Seal Kit
3:1:2	110-2634	1	Nut-Coil
3:2	107-7517	1	Valve-Solenoid
3:2:1	105-9156	1	Seal Kit
3:2:2	107-7812	1	Nut-Solenoid

Ref.	Part Number	Qty.	Description
3:3	111-5513	1	Valve-Needle, Weight
3:3:1	107-7527	1	Seal Kit
3:5	111-5516	2	Coil-Solenoid
4	09479	2	Washer-Plain
5	09480	2	Washer-Lock
6	09395	2	Screw-HH
7	10-06-031	2	Seal-Dowty
8	10-06-030	1	Seal-Dowty

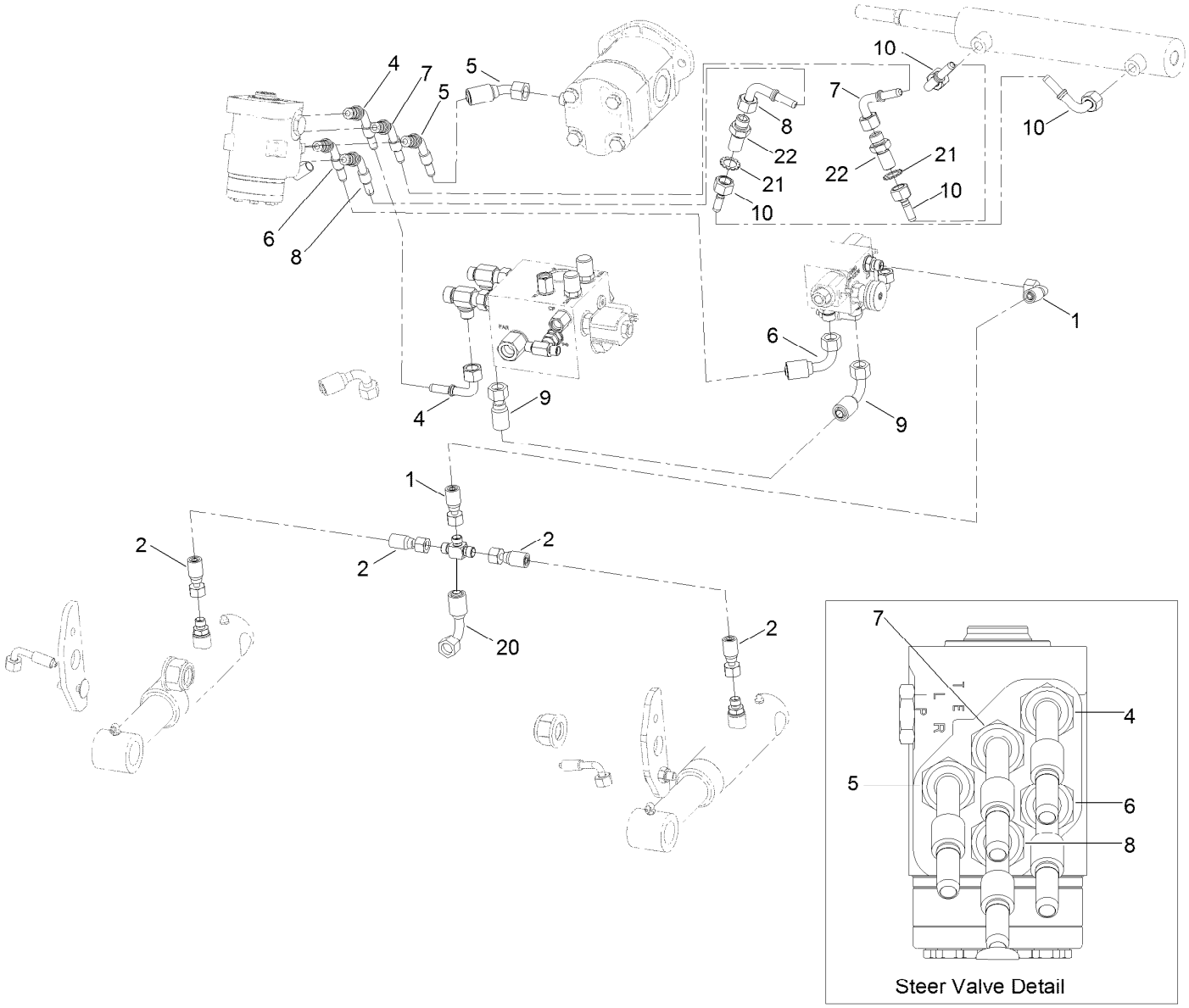

Hose Assembly No. 2

Ref.	Part Number	Qty.	Description
1	111-4961	1	Hose
2	111-4962	2	Hose
4	111-3613	1	Hose
5	111-3614	1	Hose
6	111-4963	1	Hose
7	111-7538	1	Hose
8	111-7539	1	Hose
9	111-4964	1	Hose
10	111-7537	2	Hose
20	30-06-201	1	Tee
21	111-5622	2	Washer-Lock, Serrated
22	30-06-208	2	Adaptor

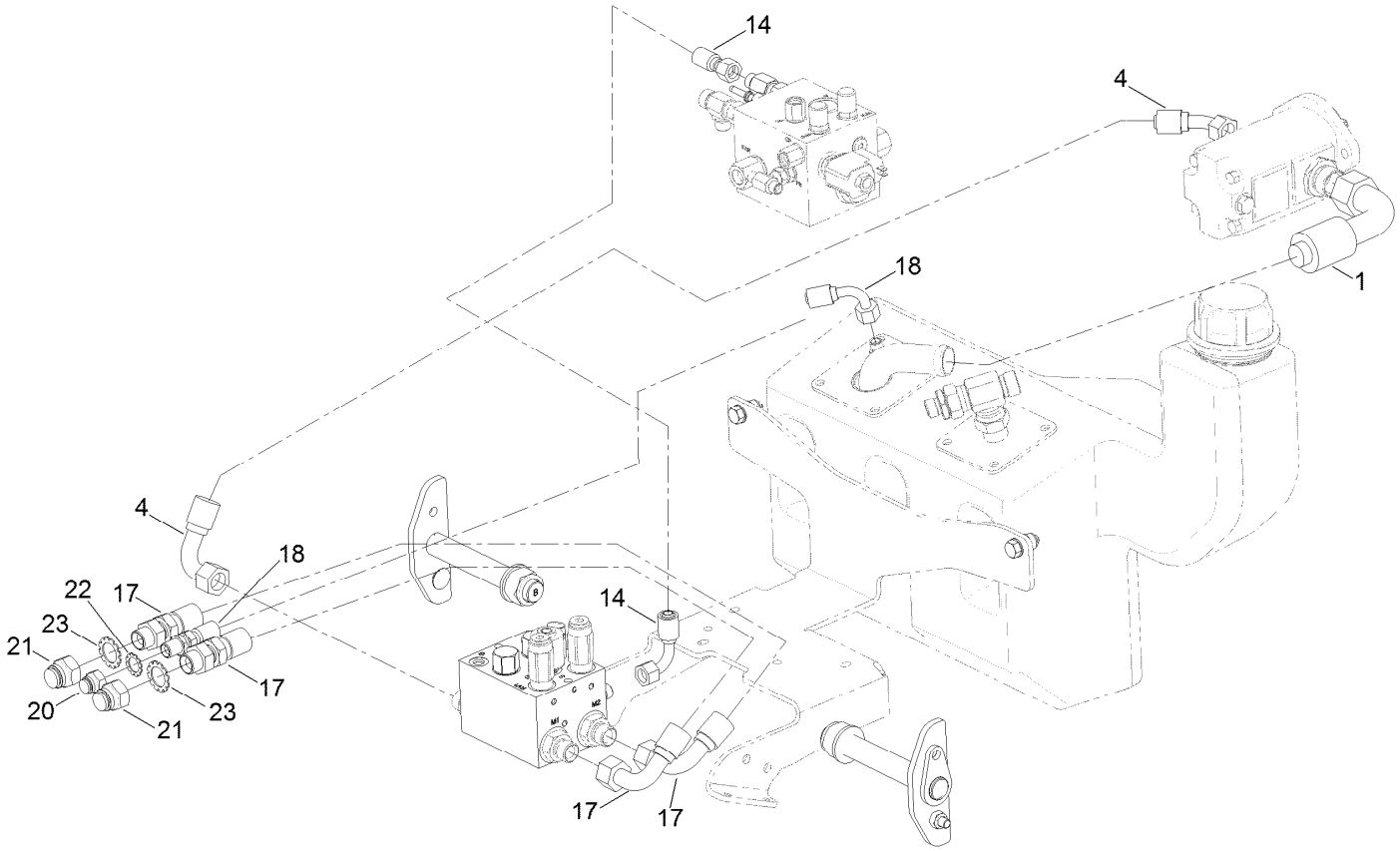

Hose Assembly No. 3

Ref.	*Part Number*	*Qty.*	*Description*
1	111-5486	1	Hose
4	111-4966	1	Hose
14	111-8085	1	Hose
17	111-4968	2	Hose
18	111-4970	1	Hose
20	111-4972	1	Cap-BSP
21	111-5382	2	Cap-BSP
22	111-5622	1	Washer-Lock, Serrated
23	953733	2	Washer

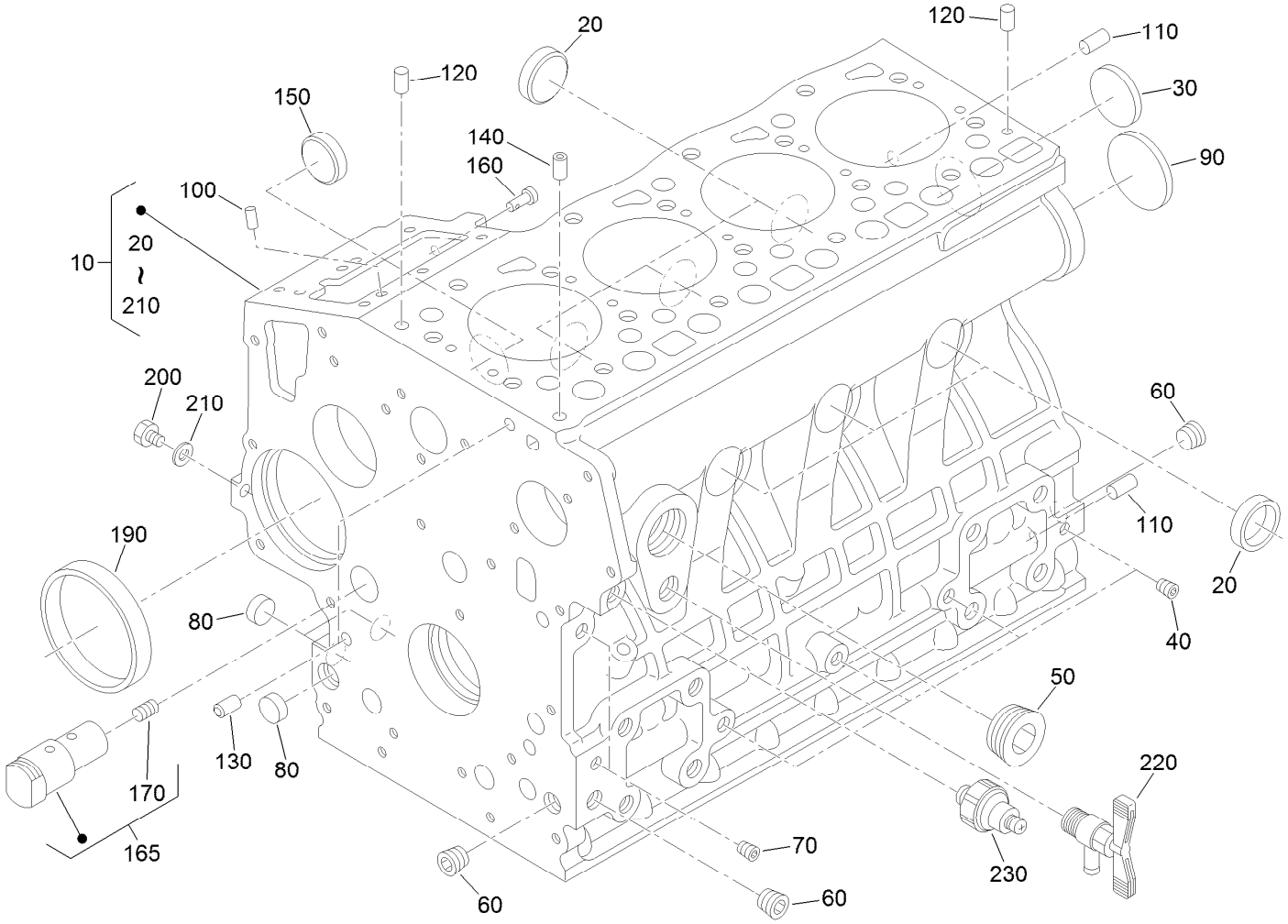

Crankcase Assembly

Ref.	Part Number	Qty.	Description
10	120-2558	1	Crankcase ASM
20	98-9398	6	Cap-Sealing
30	98-7539	1	Cap-Sealing
40	98-9687	4	Plug
50	105-3779	1	Plug
60	98-9597	3	Plug
70	98-7487	2	Plug
80	98-9379	3	Plug-Expansion
90	98-9668	1	Plug-Expansion
100	98-9375	2	Pin-Straight
110	98-9377	2	Pin-Straight
120	98-9376	2	Pin-Straight

Ref.	Part Number	Qty.	Description
130	98-9387	2	Pin-Pipe
140	98-9539	1	Pin-Pipe
150	98-9599	1	Plug
160	105-3796	1	Pin-Spring, Start
165	130-1237	1	Idler Shaft ASM
170	98-9675	1	Plug
190	98-9656	1	Bushing-Governor, Gear
200	120-2559	1	Plug
210	98-7428	1	Gasket
220	120-3121	1	Draincock ASM
230	98-7764	1	Switch-Oil

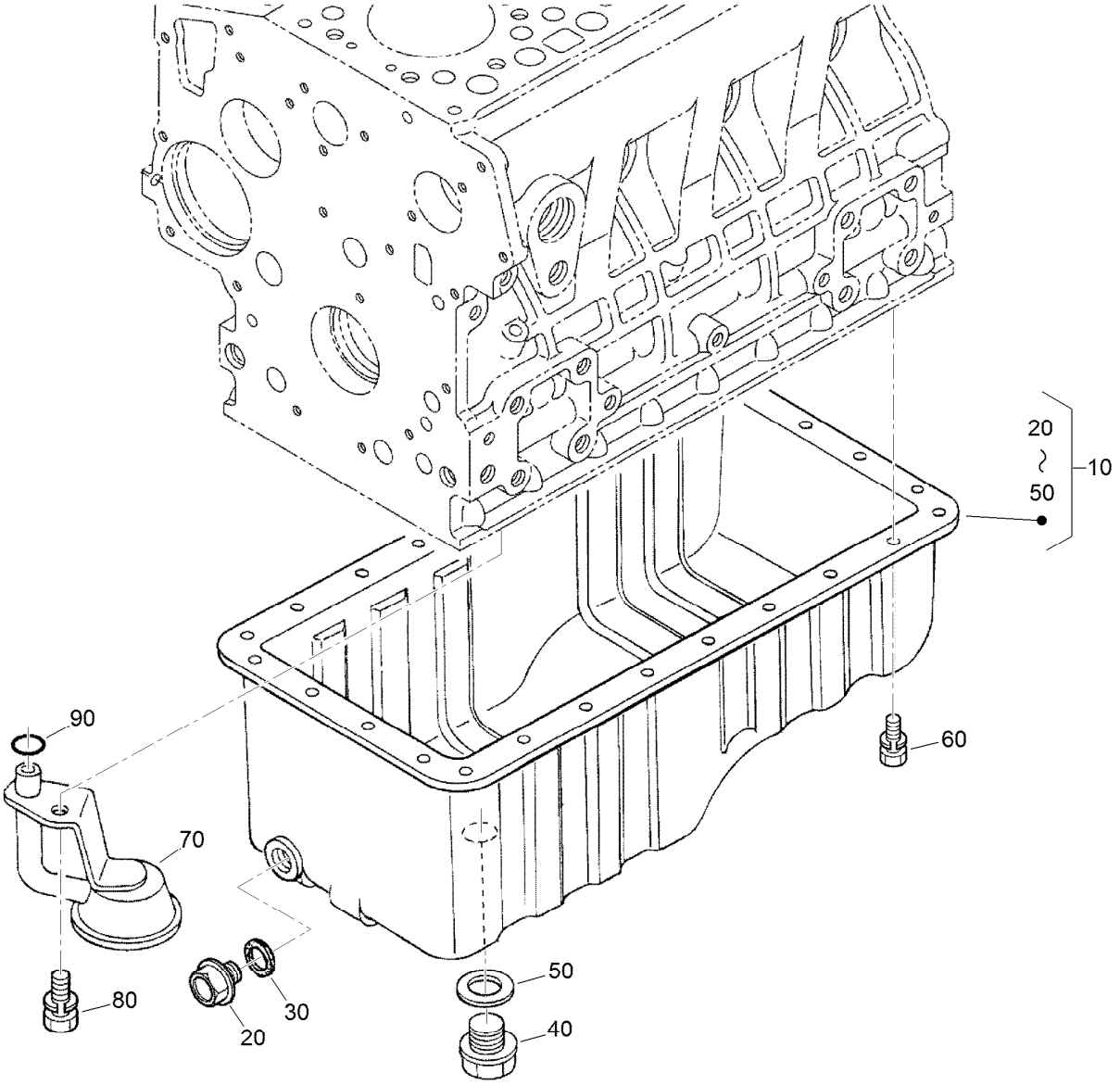

Oil Pan and Oil Pump Assembly

Ref.	*Part Number*	*Qty.*	*Description*
10	130-1283	1	Oil Pan Kit
20	114-8151	1	Plug-Drain
30	98-7524	1	Gasket
40	105-3703	1	Plug-Drain
50	110-9715	1	Gasket-Pan, Oil
60	98-9351	26	Bolt
70	115-4116	1	Filter-Oil
80	98-7526	1	Bolt
90	105-3776	1	O-Ring

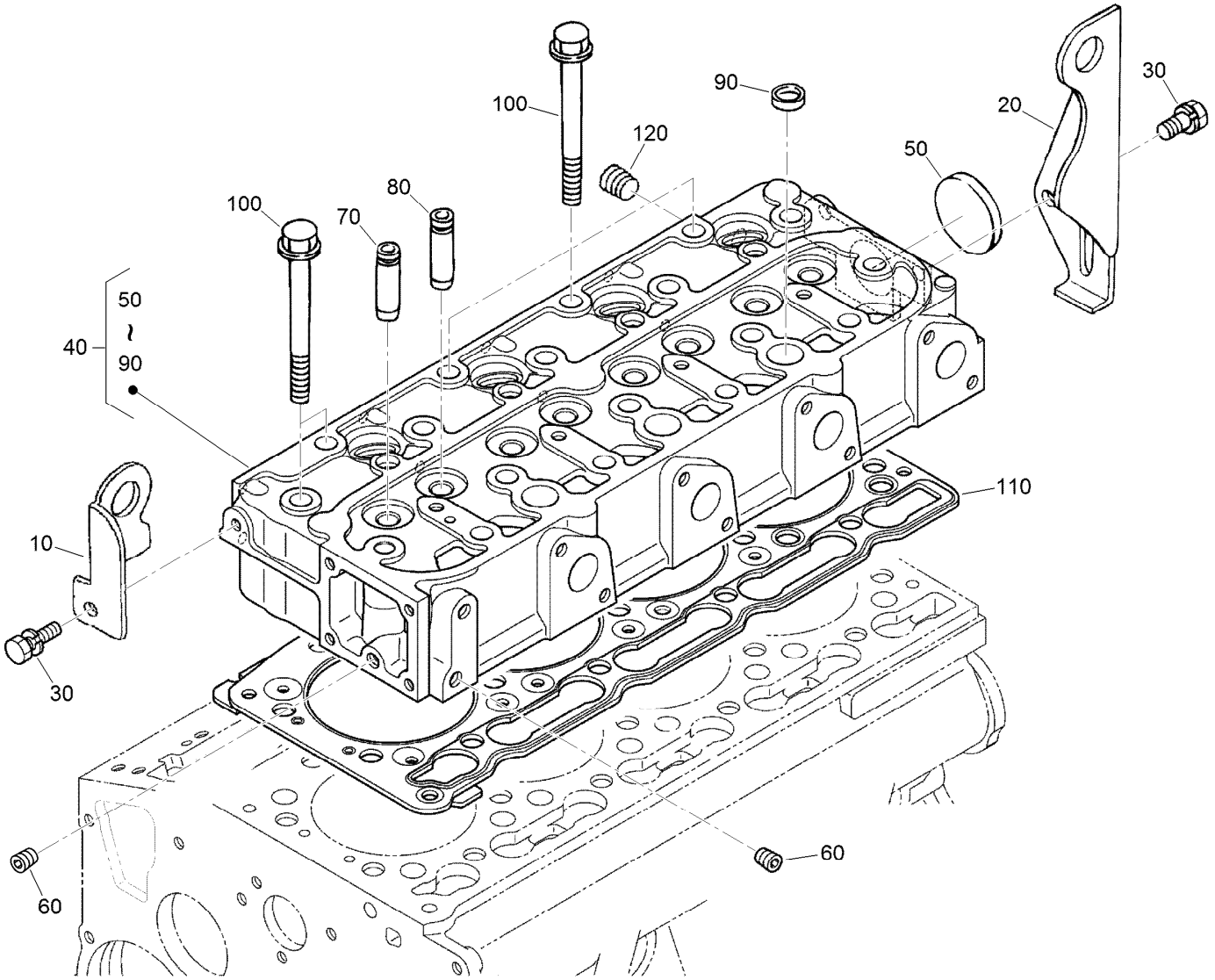

Cylinder Head Assembly

Ref.	Part Number	Qty.	Description
10	130-1231	1	Hook-Engine
20	98-9478	1	Hook-Engine
30	100-9195	2	Bolt
40	130-1382	1	*obs* Cylinder Head ASM
50	105-3705	1	Cap-Sealing
60	98-9687	2	Plug
70	107-9066	4	Guide-Valve, Inlet
80	107-9067	4	Guide-Valve, Exhaust
90	98-9389	3	Cap-Sealing
100	98-9479	18	Bolt-Head, Cylinder
110	127-0434	1	Gasket-Head, Cylinder
120	98-9444	1	Plug

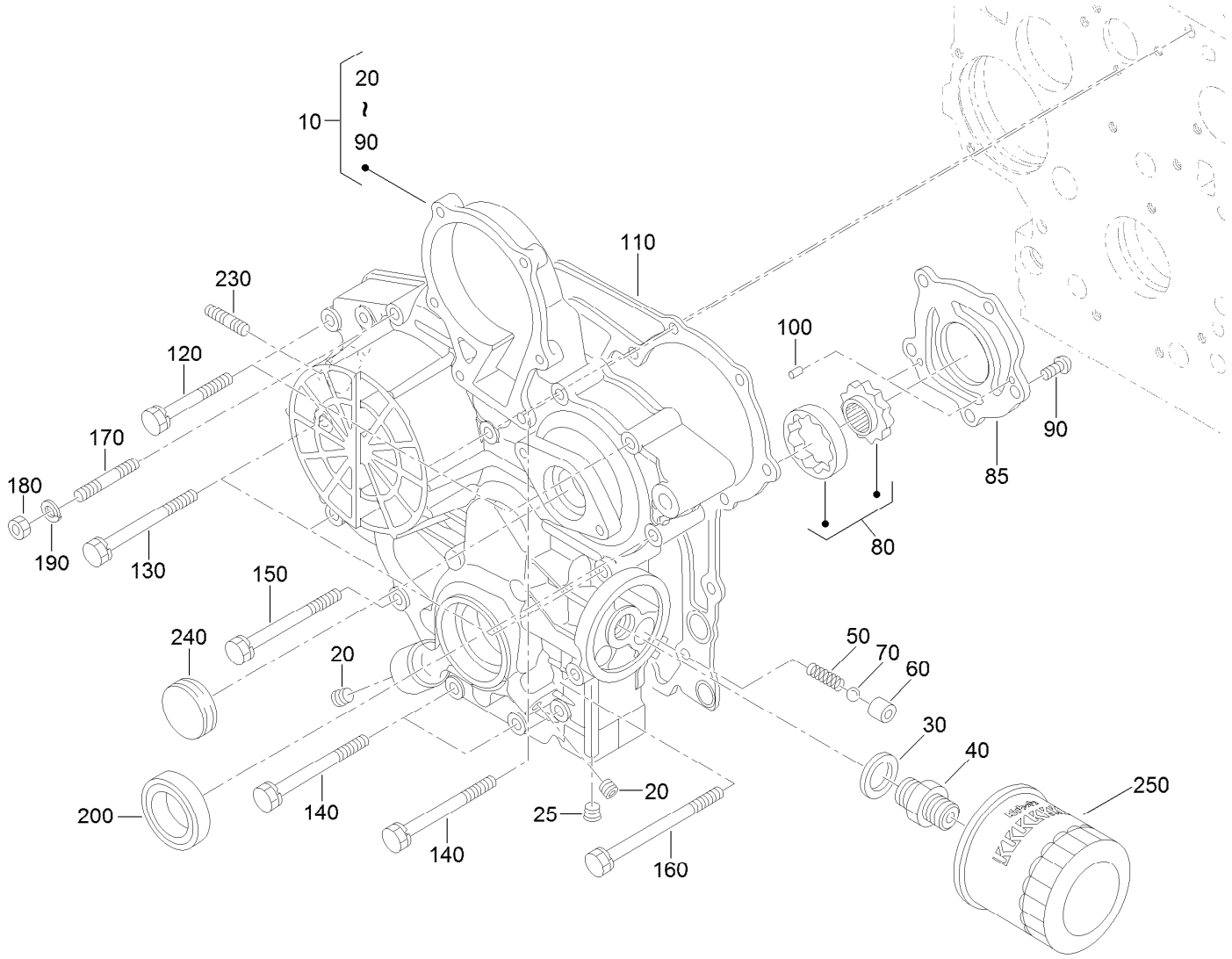

Gear Case and Oil Filter Cartridge Assembly

Ref.	Part Number	Qty.	Description
10	130-1243	1	*obs* Gear Case ASM
20	98-9598	2	Plug
25	98-7487	1	Plug
30	98-7562	1	Washer-Plain
40	98-9388	1	Joint-Pipe
50	130-1511	1	Spring
60	130-1510	1	Valve-Relief
70	98-9380	1	Ball
80	130-1508	1	Rotor ASM
85	130-1509	1	Cover-Pump, Oil
90	130-1164	5	Screw-Binding
100	107-9072	2	Pin-Straight
110	98-9633	1	Gasket-Case, Gear

Ref.	Part Number	Qty.	Description
120	100-1765	3	Bolt
130	125-9063	4	Bolt-Sems
140	98-9356	4	Bolt
150	107-9074	1	Bolt
160	98-9586	1	Bolt
170	105-3709	1	Stud
180	100-2203	1	Nut-Flange
190	98-7699	1	Washer-Spring
200	119-8038	1	Seal-Oil
230	105-3710	2	Stud
240	98-9641	1	Cover-Case, Gear
250	108-3841	1	Filter-Oil

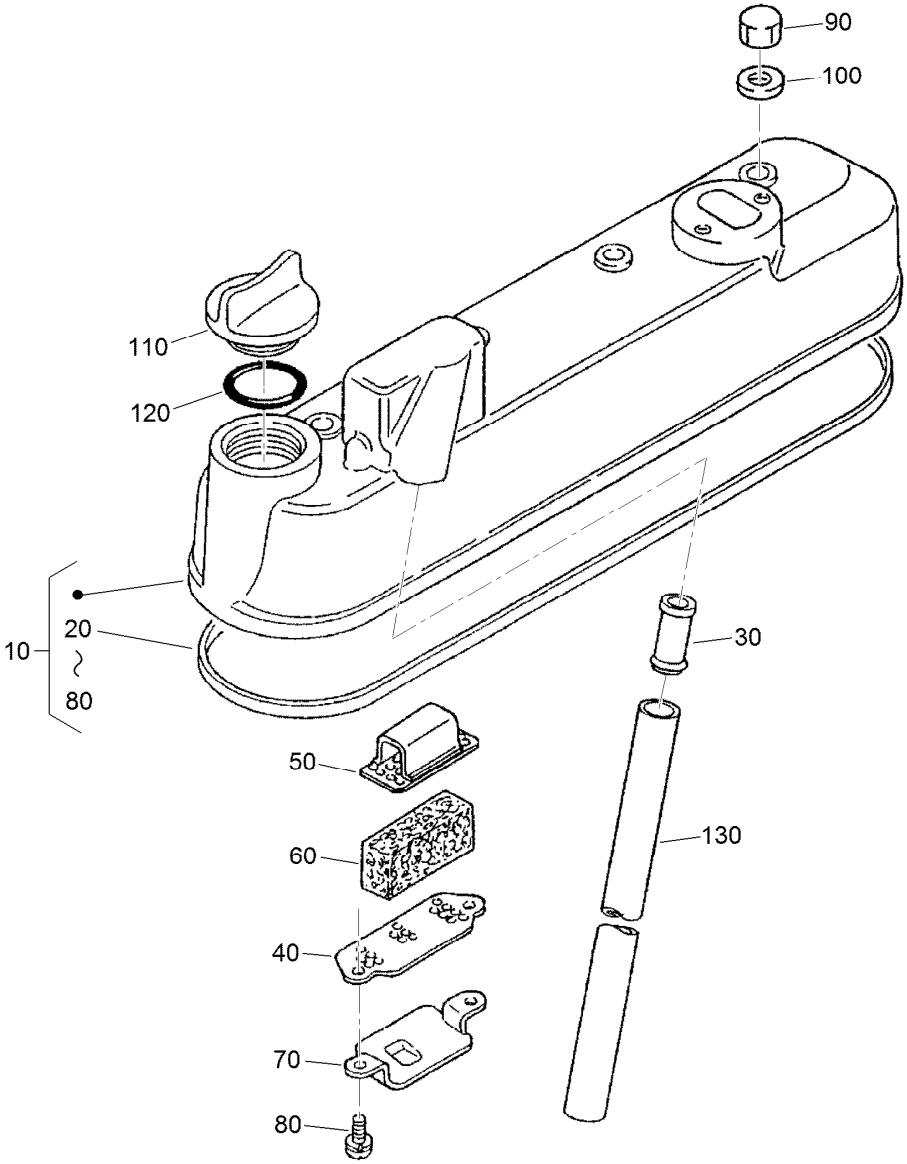

Cylinder Head Cover Assembly

Ref.	*Part Number*	*Qty.*	*Description*
10	105-3711	1	Cylinder Head Cover ASM
20	105-3712	1	Gasket-Cover, Head
30	98-9492	1	Joint-Pipe, Breather
40	98-9488	1	Plate-Element, Breather
50	98-9489	1	Plate-Element, Breather
60	98-9493	1	Element-Breather
70	98-9490	1	Shield-Oil, Breather
80	98-9364	2	Screw (With Washer)
90	98-9455	4	Nut-Cap
100	98-9454	4	Gasket
110	107-9075	1	Plug-Filler, Oil
120	99-3446	1	O-Ring
130	98-9491	1	Pipe-Breather

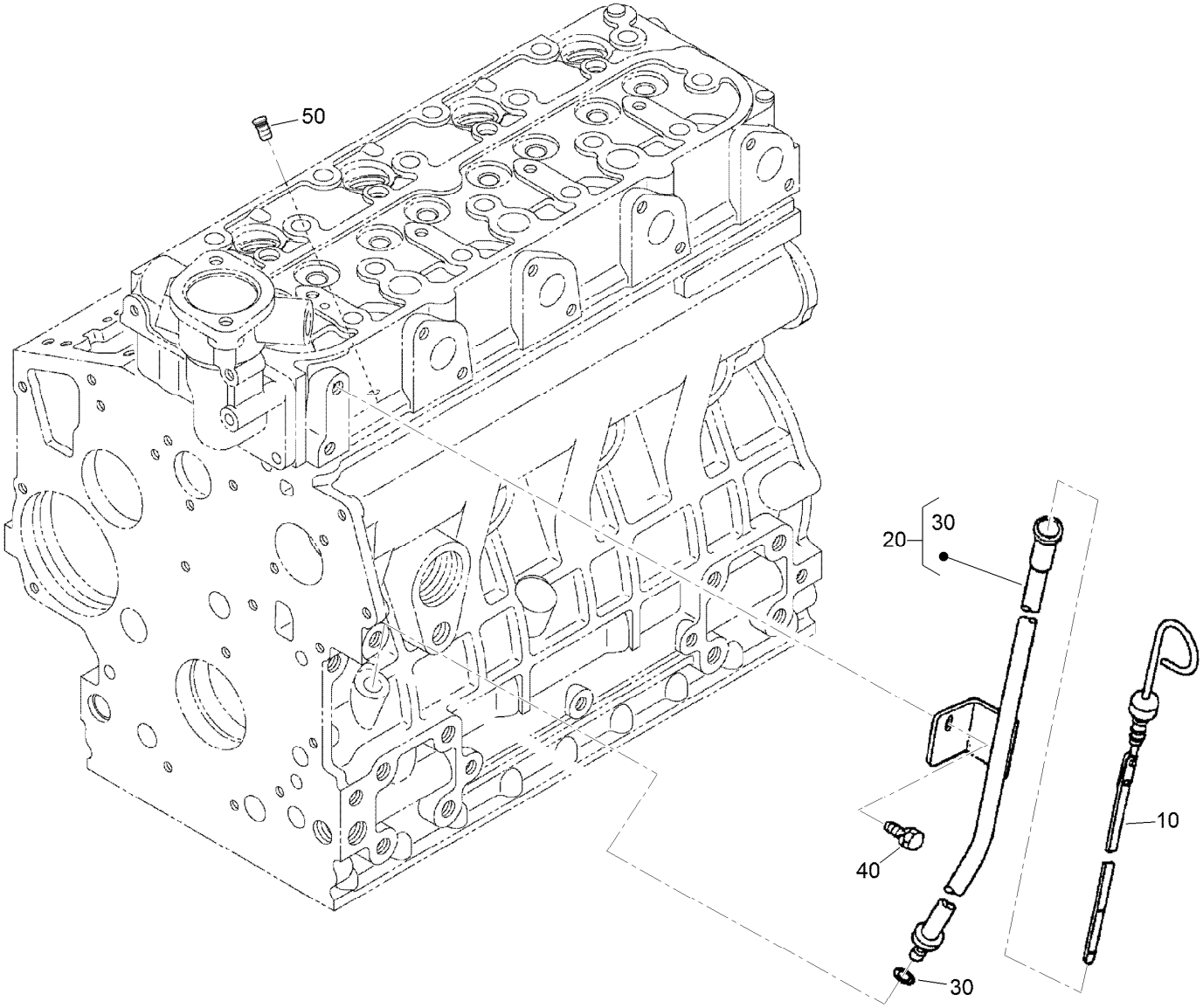

Dipstick and Guide Assembly

Ref.	*Part Number*	*Qty.*	*Description*
10	120-3124	1	Gauge-Oil
20	98-9672	1	Oil Gauge Guide ASM
30	98-9722	1	O-Ring
40	100-9195	1	Bolt
50	110-3720	1	Plug-Gauge, Oil

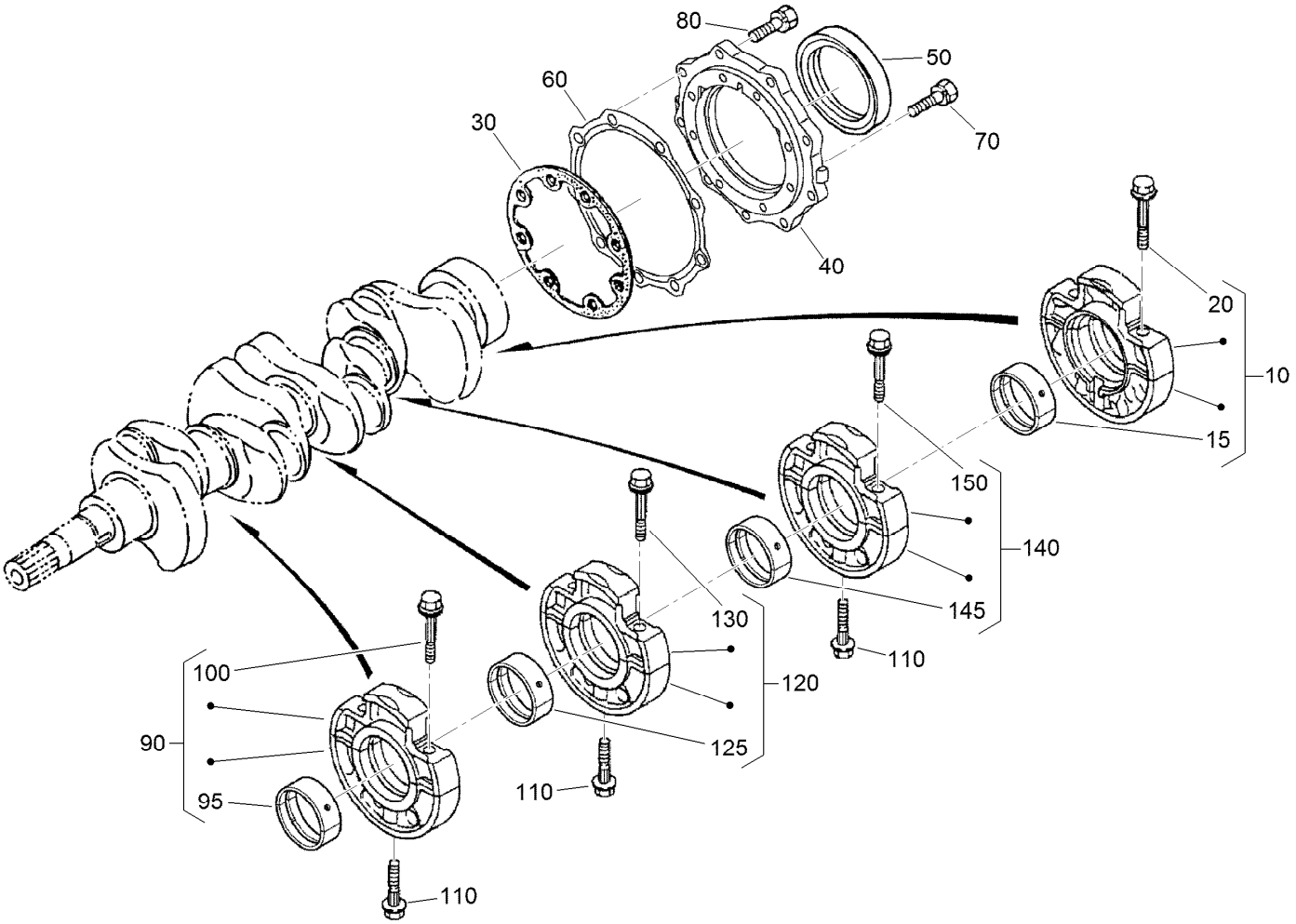

Main Bearing Case Assembly

Ref.	Part Number	Qty.	Description
10	112-7026	1	Wheel Bearing Case ASM
15	115-4121	1	Metal-Crankshaft (STD)
20	98-9484	2	Bolt-Case, Bearing
30	127-0440	1	Gasket-Case, Bearing
40	112-7046	1	Cover-Case, Bearing
50	112-0180	1	Seal-Oil
60	112-7037	1	Gasket-Cover, Case
70	127-0441	8	Bolt
80	127-0442	9	Bolt
90	115-4106	1	Main Bearing Case ASM

Ref.	Part Number	Qty.	Description
95	98-9524	1	Metal-Crankshaft (STD Set)
100	98-9484	2	Bolt-Case, Bearing
110	98-9485	3	Bolt-Case, Bearing
120	115-4107	1	Main Bearing Case ASM
125	98-9524	1	Metal-Crankshaft (STD Set)
130	98-9484	2	Bolt-Case, Bearing
140	130-1265	1	Main Bearing Case ASM
145	98-9524	1	Metal-Crankshaft (STD Set)
150	98-9484	2	Bolt-Case, Bearing

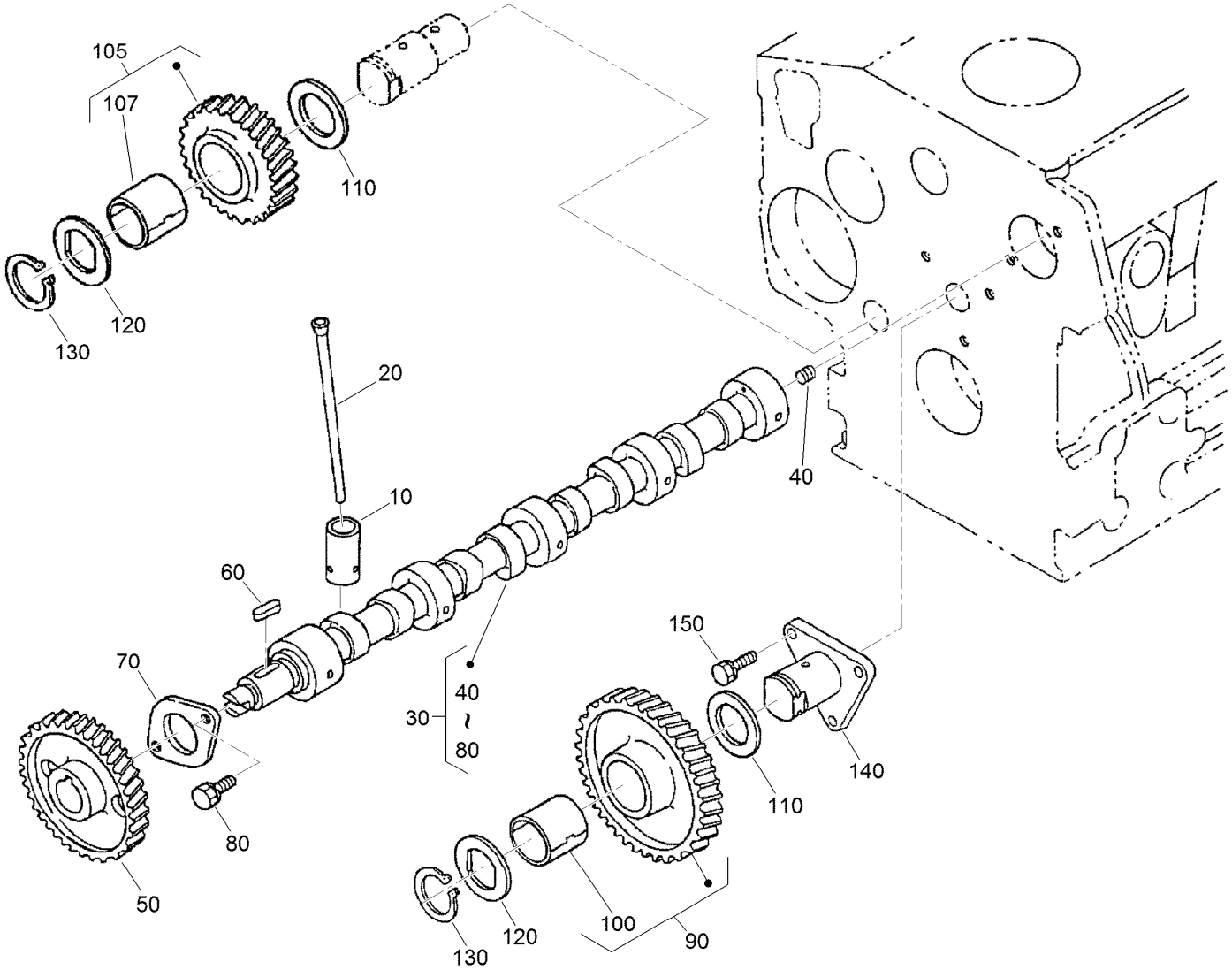

Camshaft and Idle Gear Shaft Assembly

Ref.	Part Number	Qty.	Description
10	112-0185	8	Tappet
20	127-0421	8	Rod-Push
30	120-3116	1	Camshaft ASM
40	110-3729	1	Ball
50	98-9512	1	Gear-Cam
60	98-9378	1	Key-Feather
70	98-9510	1	Stopper-Camshaft
80	98-7692	2	Bolt
90	117-7584	1	Idler Gear ASM

Ref.	Part Number	Qty.	Description
100	117-7585	1	Bushing-Gear, Idle
105	130-1259	1	Idler Gear ASM
107	117-7585	1	Bushing-Gear, Idle
110	98-9535	1	Collar-Gear, Idle
120	98-9536	1	Collar-Gear, Idle
130	98-9534	1	Circlip-Gear, Idle
140	98-9533	1	Shaft-Gear, Idle
150	98-7692	3	Bolt

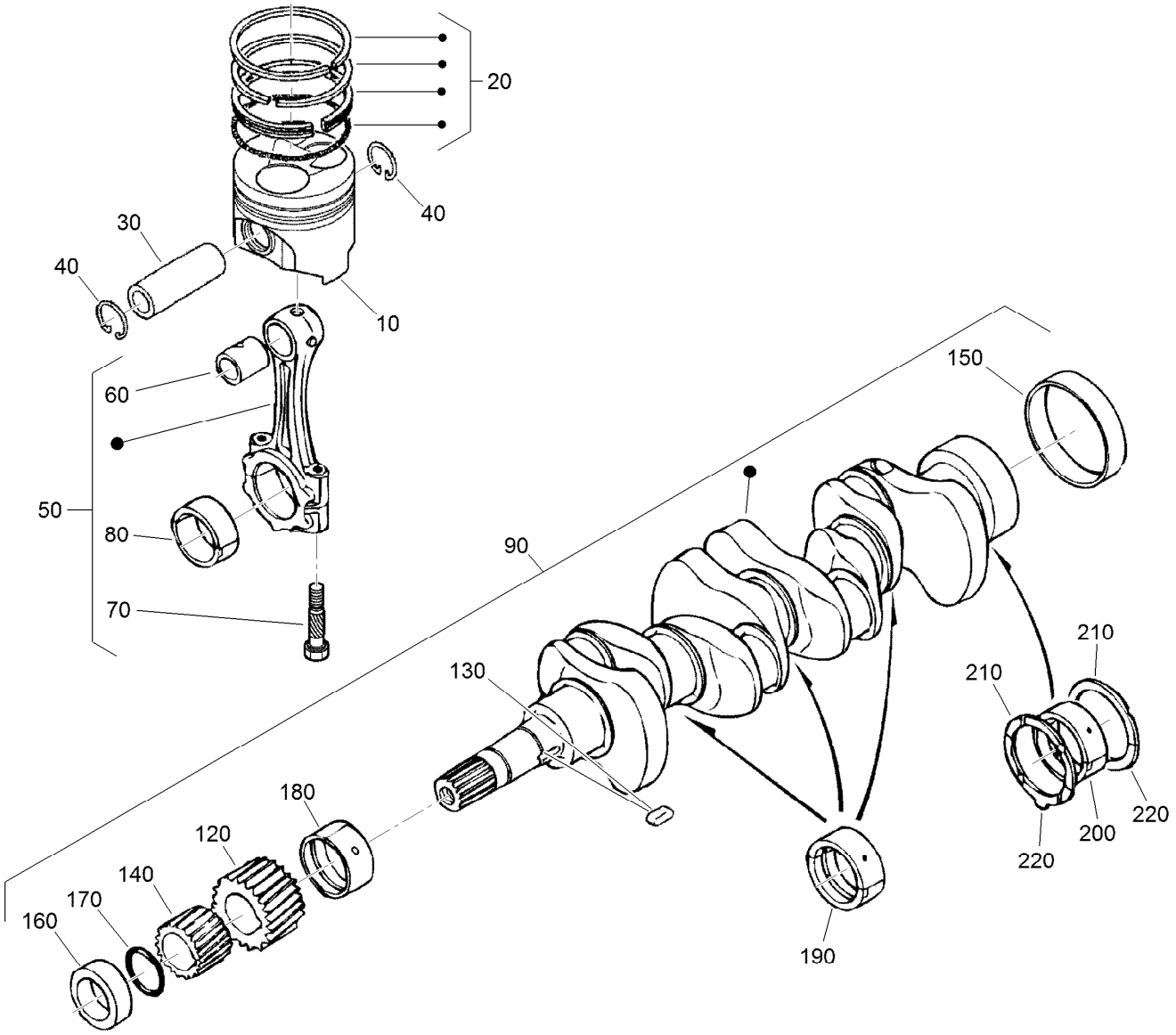

Piston and Crankshaft Assembly

Ref.	Part Number	Qty.	Description
10	112-8404	4	Piston (STD)
10	112-8414	4	Piston (+0.5Mm)
20	98-9551	4	Piston Ring ASM (STD)
20	108-1404	4	Piston Ring ASM (+0.5Mm)
30	98-9513	4	Pin-Piston
40	98-9514	8	Circlip-Pin, Piston
50	117-7586	4	Connecting Rod ASM
60	115-3014	4	Bushing-Pin, Piston
70	98-9517	8	Bolt-Rod, Connecting
80	98-9553	4	Bearing-Rod (STD)
80	117-7587	4	Metal-Crankpin (-0.2Mm)
80	117-7588	4	Metal-Crankpin (-0.4Mm)
90	120-2561	1	Crankshaft ASM
120	117-7561	1	Gear-Crankshaft
130	98-9666	1	Key
140	127-0445	1	Gear-Drive, Oil Pump
150	98-9522	1	Sleeve-Crankshaft

Ref.	Part Number	Qty.	Description
160	127-0444	1	Collar-Crankshaft
170	105-3783	1	O-Ring
180	112-7005	1	Bearing-Main (STD)
180	98-9528	1	Bearing-Main (-0.2Mm)
180	130-1274	1	Metal-Crankshaft (-0.40Mm)
190	98-9524	3	Metal-Crankshaft (STD Set)
190	127-0433	3	Metal-Crankshaft (-0.2Mm)
190	98-9531	3	Bearing-Main (0.4Mm)
200	115-4121	1	Metal-Crankshaft (STD)
200	112-7039	1	Metal-Crankshaft (0.2Mm)
200	112-7040	1	Metal-Crankshaft (-0.4Mm)
210	98-9413	2	Bearing-Thrust (STD)
210	127-0416	2	Metal-Side (+0.2Mm)
210	127-0417	2	Metal-Side (+0.40Mm)
220	98-9688	2	Bearing-Thrust (STD)
220	127-0437	2	Metal-Side (+0.2Mm)
220	127-0438	2	Metal-Side (+0.40Mm)

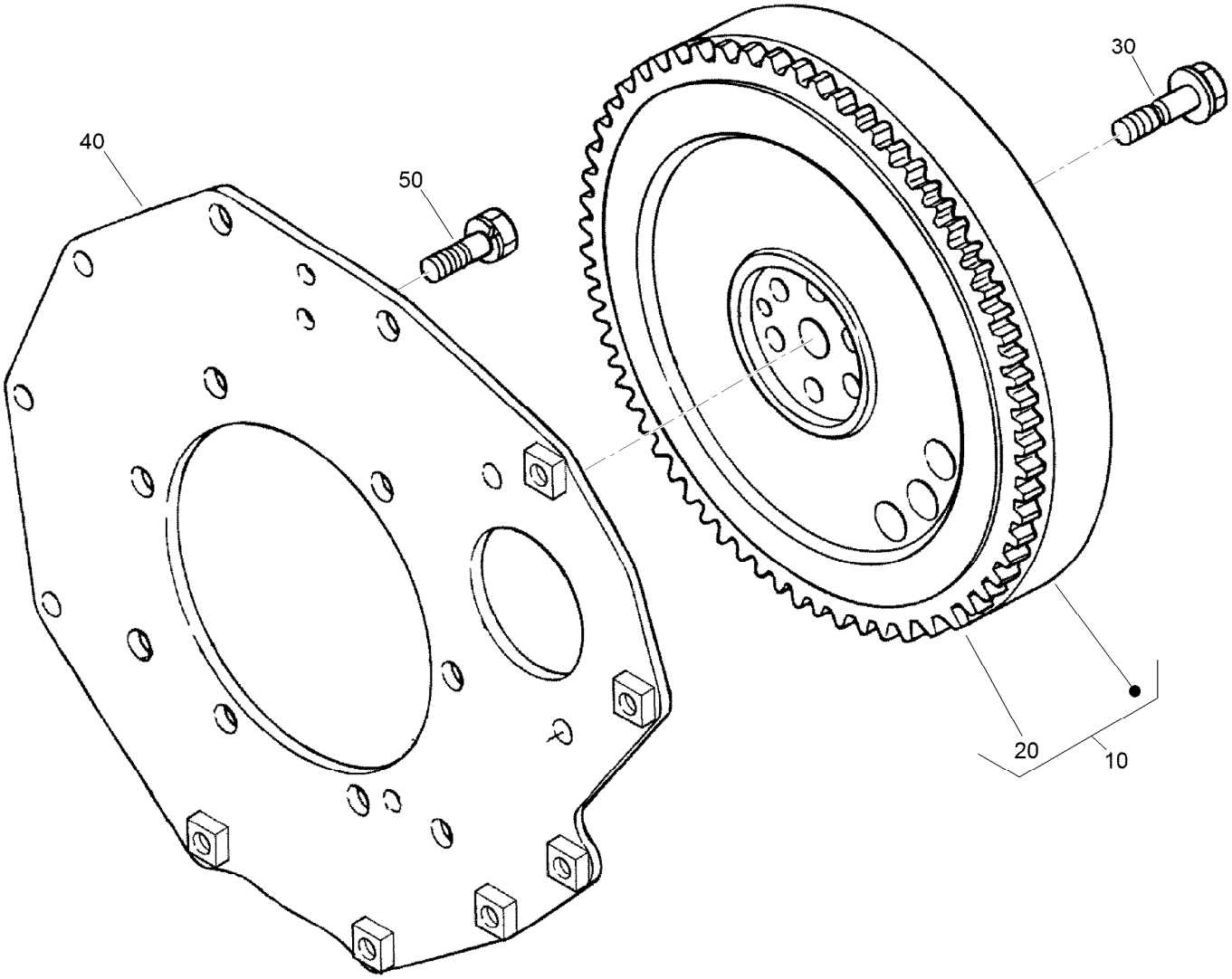

Flywheel Assembly

Ref.	Part Number	Qty.	Description
10	105-3721	1	Flywheel ASM
20	115-3015	1	Gear-Ring
30	98-9537	6	Bolt-Flywheel
40	98-9486	1	Plate-End, Rear
50	98-9392	8	Bolt

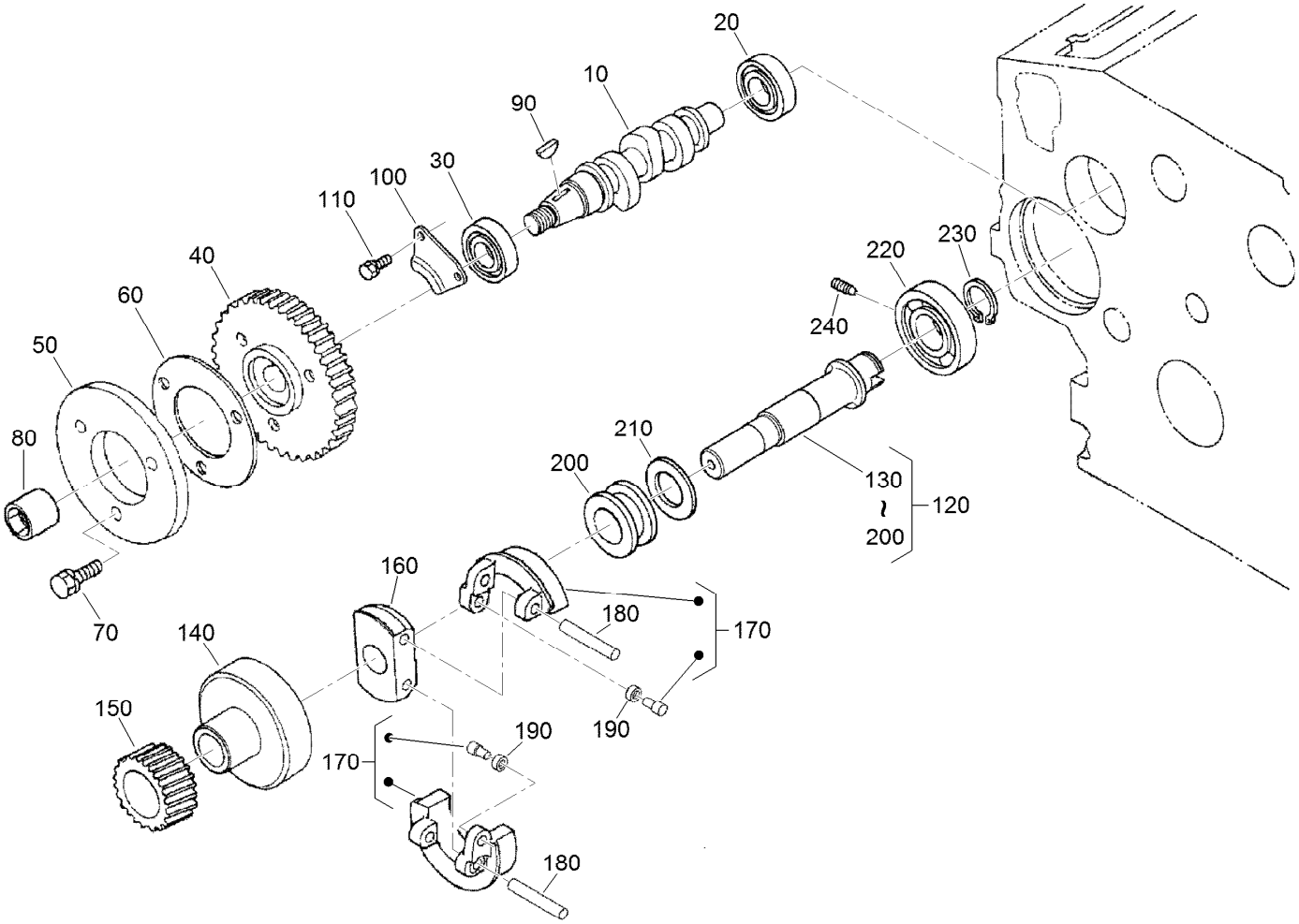

Fuel Camshaft and Governor Shaft Assembly

Ref.	Part Number	Qty.	Description
10	105-3723	1	Camshaft-Fuel
20	107-9077	1	Bearing-Ball
30	107-9078	1	Bearing-Ball
40	98-9669	1	Gear-Pump, Injection
50	130-1239	1	Cam-Fuel
60	98-9548	1	Washer
70	98-9350	3	Bolt
80	130-1512	1	Nut
90	98-9595	1	Key-Woodruff
100	98-9511	1	Stopper-Fuel, Camshaft
110	98-7692	2	Bolt
120	130-1266	1	Governor Shaft ASM

Ref.	Part Number	Qty.	Description
130	105-3725	1	Shaft-Governor
140	98-9562	1	Holder-Gear, Governor
150	98-9673	1	Gear-Governor
160	98-9561	1	Holder-Weight, Governor
170	130-1240	2	Governor Weight ASM
180	98-9560	2	Shaft-Weight, Governor
190	98-9692	2	Roller
200	98-9563	1	Sleeve-Governor
210	98-9564	1	Washer-Thrust
220	107-9079	1	Bearing-Ball
230	98-9657	1	Circlip-Shaft, Governor
240	98-9565	1	Screw-Set

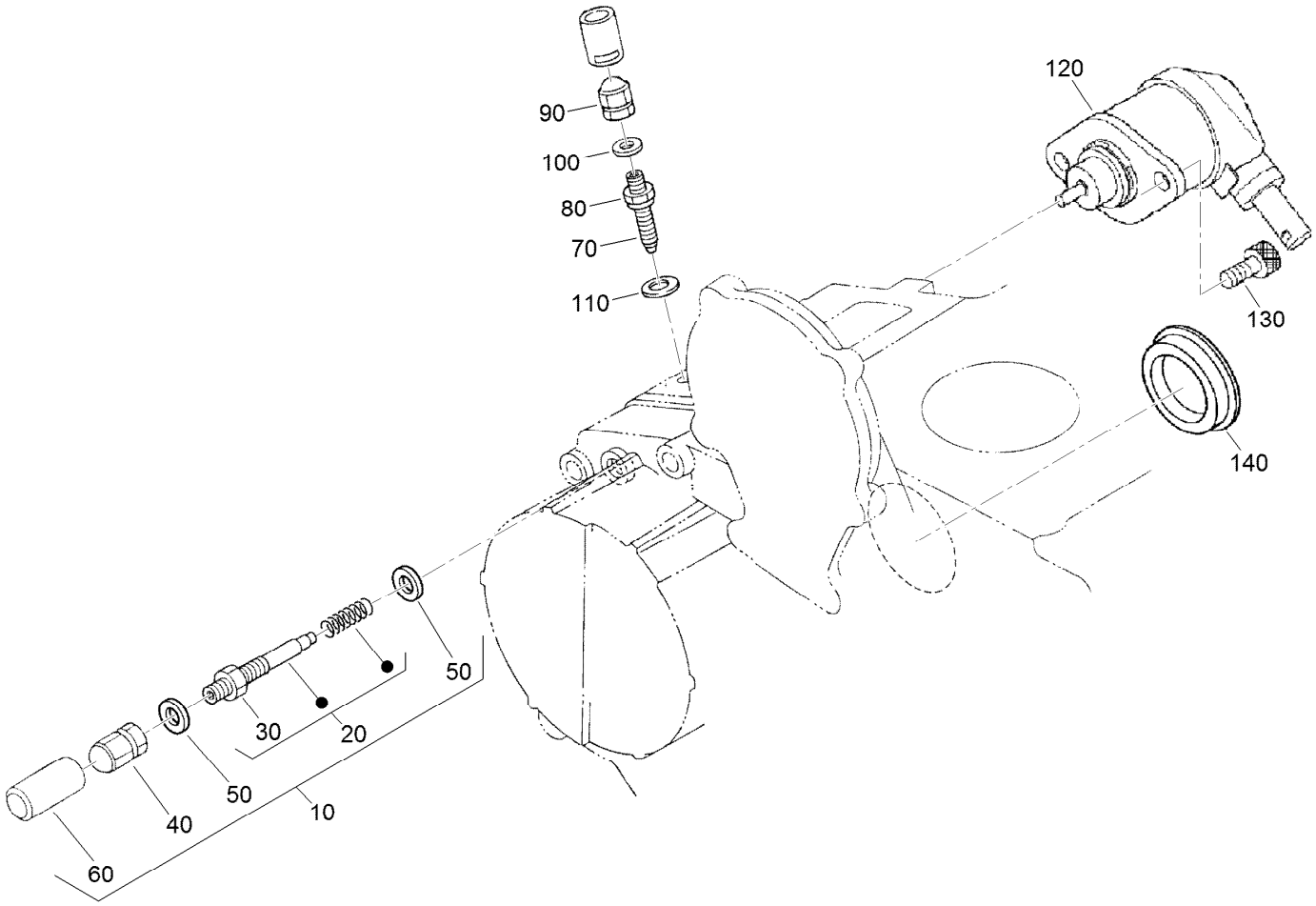

Idle Apparatus and Stop Solenoid Assembly

Ref.	*Part Number*	*Qty.*	*Description*
10	98-9678	1	Idle Apparatus ASM
20	112-7014	1	Adjusting Bolt ASM
30	98-9439	1	Nut
40	112-0181	1	Nut
50	98-7654	2	Gasket
60	98-7656	1	Cap
70	112-7015	1	Bolt-Adjusting
80	100-2175	1	Nut-Lock
90	112-0181	1	Nut
100	98-7654	1	Gasket
110	107-9081	1	Gasket
120	104-5155	1	Solenoid-Stop
130	130-1155	2	Screw-HSH
140	112-7016	1	Cover-Pump

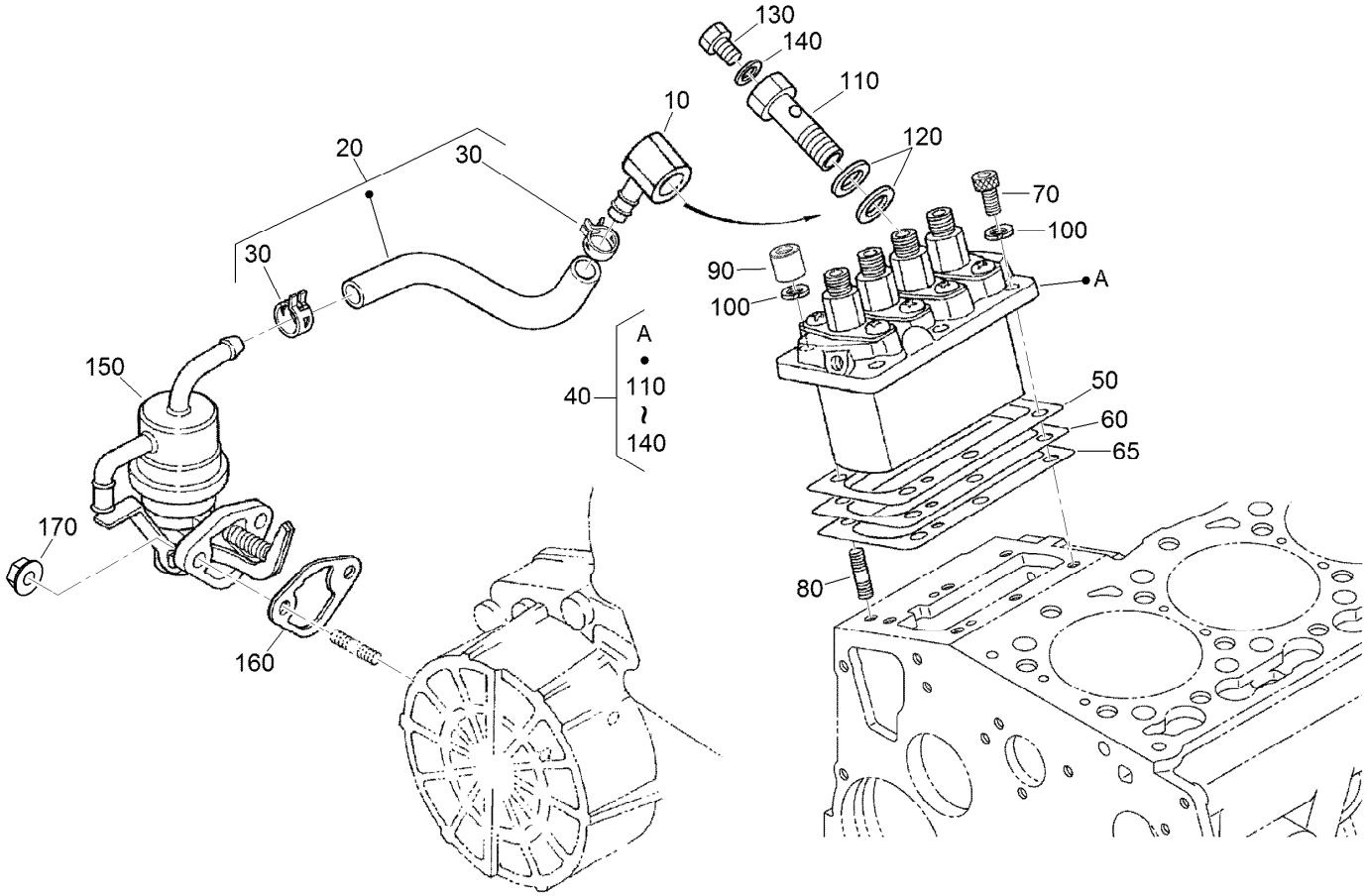

Injection Pump and Fuel Pump Assembly

Ref.	Part Number	Qty.	Description
10	98-9596	1	Joint-Eye
20	130-1238	1	Fuel Pipe ASM
30	100-2217	2	Clip-Pipe
40	105-3727	1	Injection Pump ASM
50	105-3728	1	Shim-Pump, Injection (.20Mm)
50	105-3729	1	Shim-Pump, Injection (.25Mm)
60	105-3730	1	Shim-Pump, Injection (.30Mm)
60	115-3016	1	Shim-Pump, Injection (.350Mm)
65	115-3017	1	Shim-Pump, Injection (.175Mm)

Ref.	Part Number	Qty.	Description
70	117-7564	3	Bolt-Hex Soc HD
80	98-9438	3	Stud
90	98-9440	3	Nut-Cap
100	98-7699	3	Washer-Spring
110	98-9464	1	Bolt-Joint
120	98-9445	2	Gasket
130	98-9430	1	Screw
140	98-9446	1	Gasket
150	98-9677	1	Fuel Pump ASM
160	98-9636	1	Gasket-Pump, Fuel
170	100-2203	2	Nut-Flange

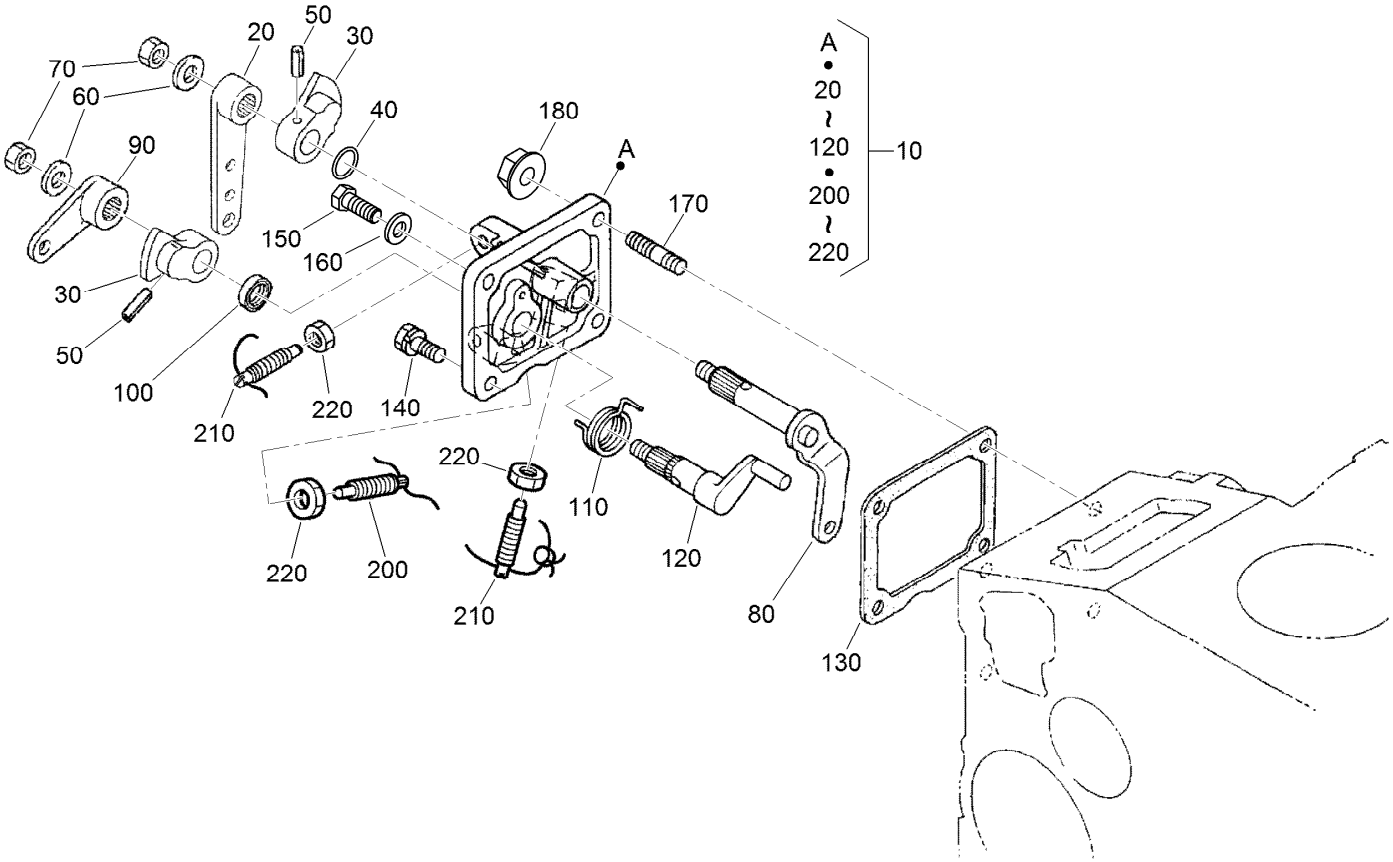

Speed Control Plate Assembly

Ref.	Part Number	Qty.	Description
10	98-9661	1	Control Plate ASM
20	98-9662	1	Lever-Control, Speed
30	98-9572	2	Lever-Control, Speed
40	105-3788	1	O-Ring
50	98-7602	2	Pin-Spring
60	98-9594	2	Washer-Plain
70	98-9589	2	Nut
80	98-9658	1	Governor Lever ASM
90	98-9663	1	Lever-Stop, Engine
100	98-7601	1	Seal-Oil
110	98-9472	1	Spring-Return

Ref.	Part Number	Qty.	Description
120	98-9664	1	Shaft-Lever, Stop
130	98-9637	1	Gasket
140	98-7692	1	Bolt
150	127-0401	1	Bolt-Hex
160	98-7654	1	Gasket
170	105-3710	2	Stud
180	100-2203	2	Nut-Flange
200	117-7565	2	Bolt-Adjusting
210	117-7566	1	Bolt-Adjusting
220	98-7572	3	Nut

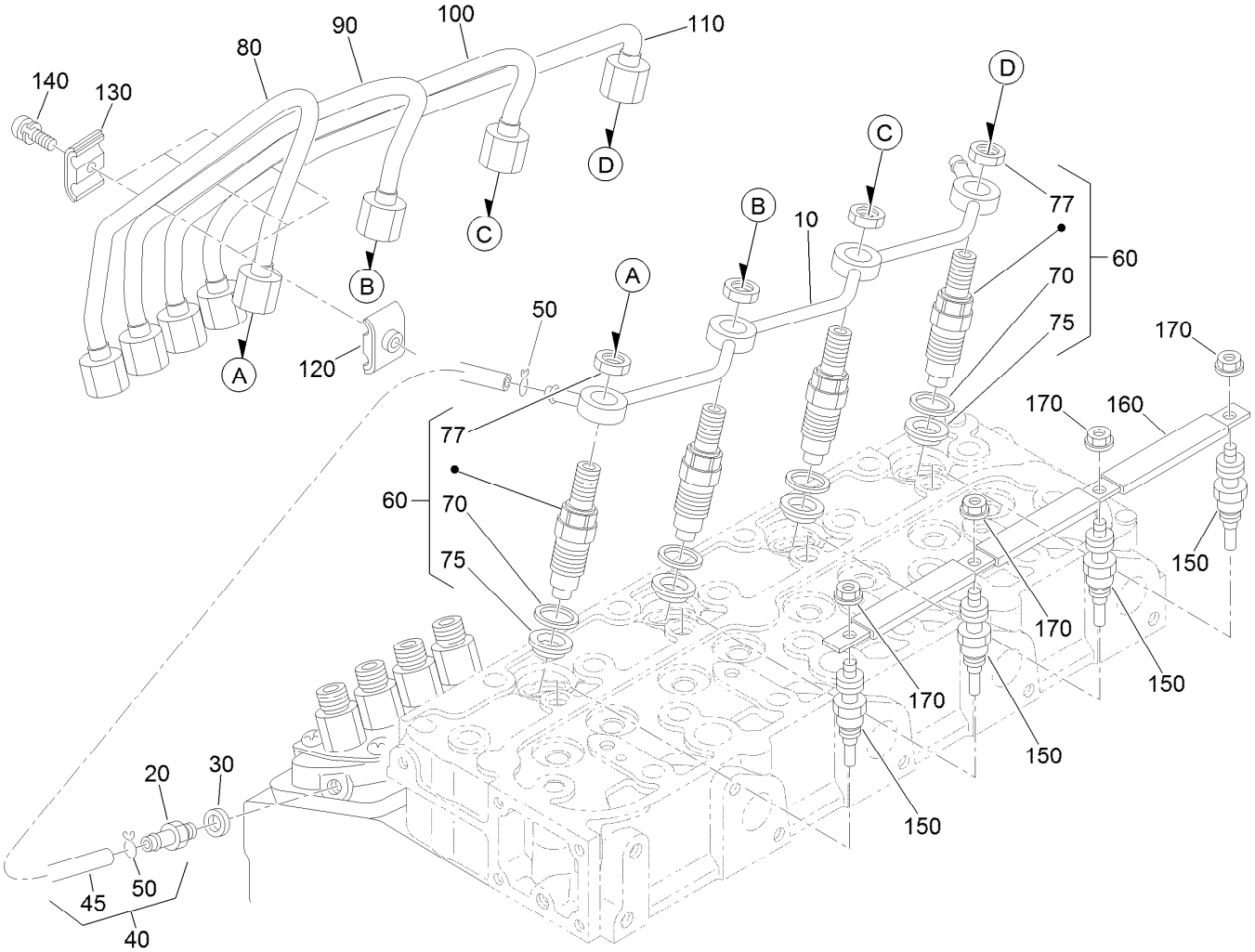

Nozzle Holder and Glow Plug Assembly

Ref.	Part Number	Qty.	Description
10	105-3737	1	Over Flow Pipe ASM
20	98-9431	1	Screw-Bleeder, Air
30	98-7654	1	Gasket
40	98-9420	1	Overflow Pipe ASM
45	112-0182	1	Pipe-Overflow
50	98-7671	2	Clip-Pipe
60	108-2866	4	Nozzle Holder Kit
70	98-7676	4	Gasket
75	98-7677	4	Seal-Heat
77	121-2411	4	Nut

Ref.	Part Number	Qty.	Description
80	98-9653	1	Pipe-Injection
90	98-9654	1	Pipe-Injection
100	98-9655	1	Pipe-Injection
110	105-3738	1	Pipe-Injection
120	98-7682	3	Clamp-Pipe
130	98-7683	3	Clamp-Pipe
140	98-7684	3	Screw (W/Washer)
150	115-3019	4	Plug-Glow
160	105-3739	1	Cord-Plug, Glow
170	99-8377	4	Nut-Flange

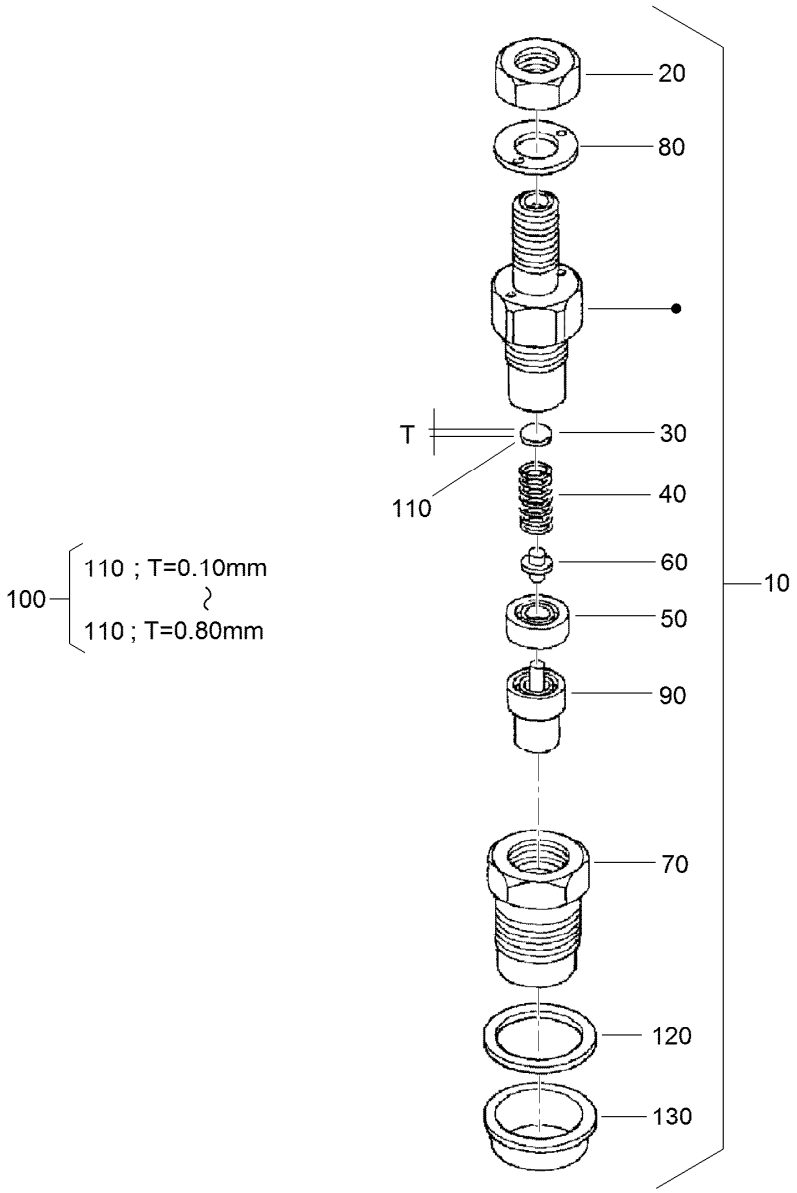

Nozzle Holder Assembly

Ref.	Part Number	Qty.	Description
10	108-2866	4	Nozzle Holder Kit
20	121-2411	4	Nut
30	99-8302	4	Washer-Adjusting
40	99-8303	4	Spring-Nozzle
50	99-8304	4	Spacer-Distance
60	99-8305	4	Rod-Push
70	99-8306	4	Nut-Nozzle
80	99-8307	4	Washer-Plain
90	107-7826	4	Piece-Nozzle
100	99-8309	4	Adjusting Washer ASM
110	99-8310	4	Washer-Adjust (0.10Mm)

Ref.	Part Number	Qty.	Description
110	99-8311	4	Washer-Adjust (0.20Mm)
110	99-8312	4	Washer-Adjust (0.30Mm)
110	99-8313	4	Washer-Adjust (0.40Mm)
110	99-8314	4	Washer-Adjust (0.50Mm)
110	99-8315	4	Washer-Adjust (0.52Mm)
110	99-8316	4	Washer-Adjust (0.54Mm)
110	99-8317	4	Washer-Adjust (0.56Mm)
110	99-8318	4	Washer-Adjust (0.58Mm)
110	99-8319	4	Washer-Adjust (0.80Mm)
120	98-7676	4	Gasket
130	98-7677	4	Seal-Heat

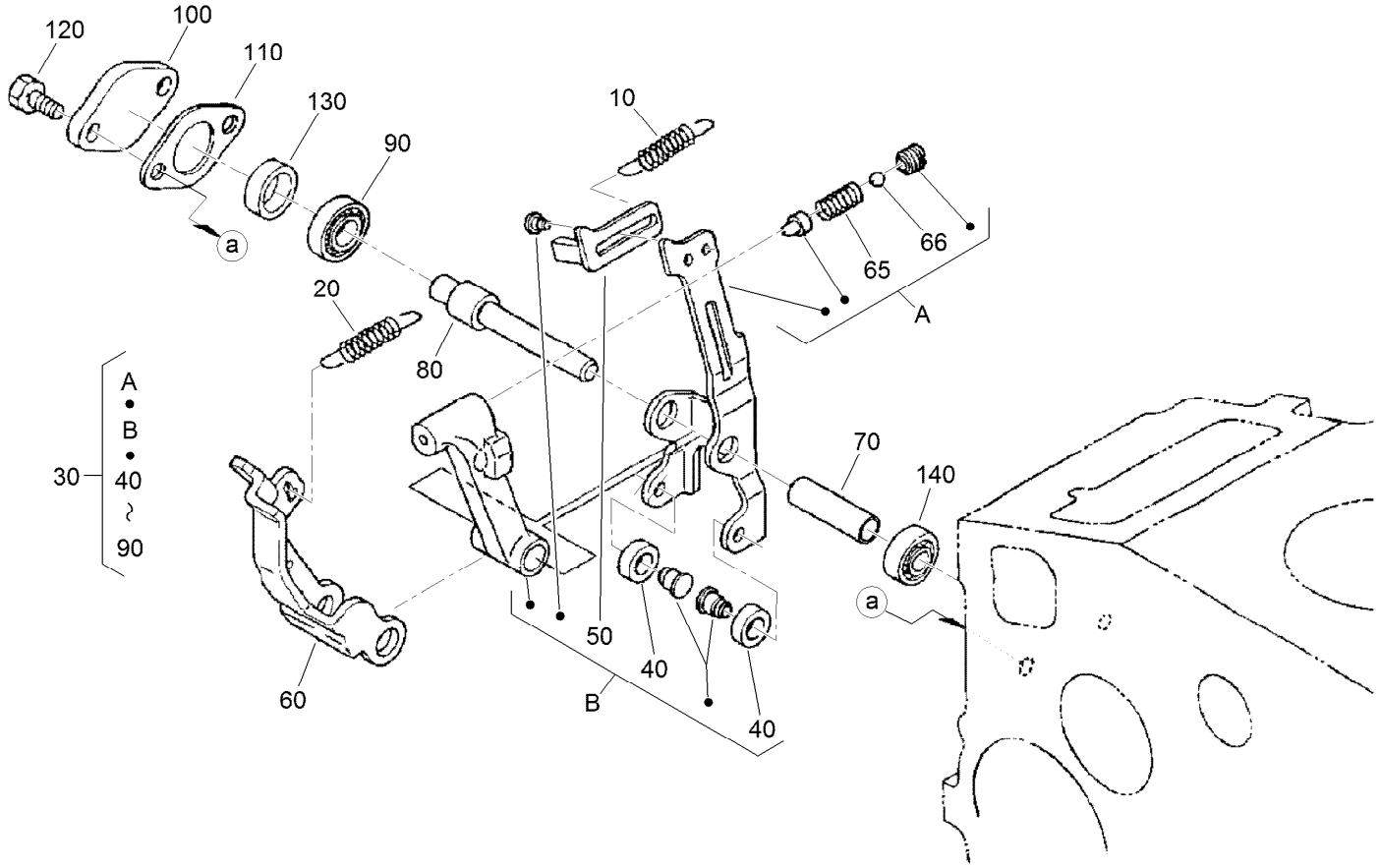

Governor Assembly

Ref.	Part Number	Qty.	Description
10	105-3741	1	Spring-Start
20	98-9681	1	Spring-Governor
30	115-4502	1	Fork Lever ASM
40	98-9692	2	Roller
50	107-9083	1	Lever-Thrust
60	107-9084	1	Lever-Fork
65	108-2867	1	Spring
66	98-7580	2	Ball

Ref.	Part Number	Qty.	Description
70	107-9085	1	Shaft-Lever, Fork
80	107-9086	1	Shaft-Lever, Fork
90	98-9570	1	Bearing-Miniaturize
100	115-4122	1	Cover-Shaft, Fork Lever
110	98-9682	1	Gasket
120	98-9350	2	Bolt
130	98-9567	1	Collar
140	98-9571	1	Bearing-Miniaturize

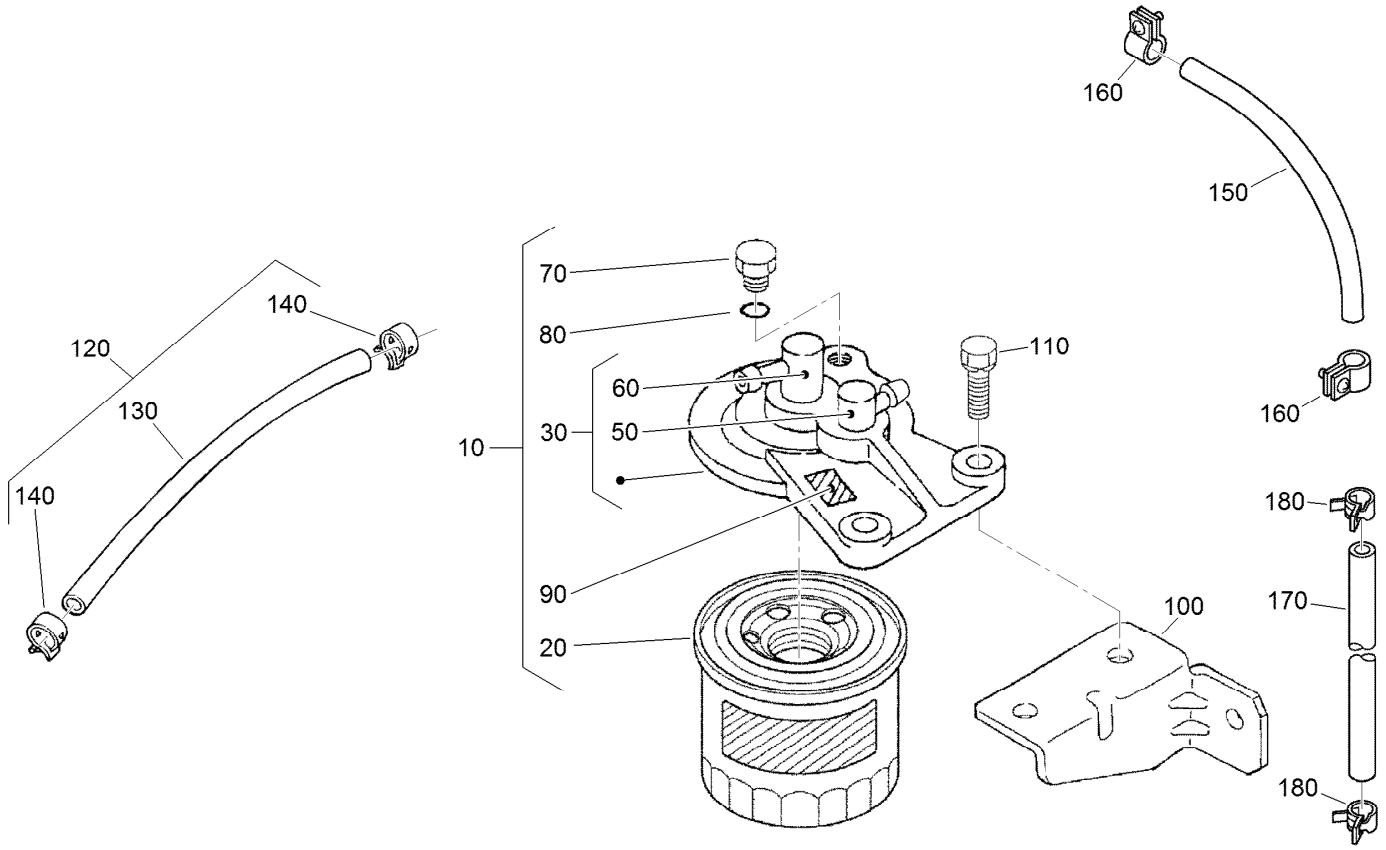

Fuel Filter Assembly

Ref.	Part Number	Qty.	Description
10	130-1188	1	Fuel Filter ASM
20	130-1187	1	Element-Filter
30	130-1189	1	Filter Cover ASM
50	130-1180	1	Joint-Pipe
60	130-1181	1	Joint-Pipe
70	130-1329	1	Plug-Filter Breather
80	130-1179	1	O Ring
90	130-1190	1	Mark-Form
100	130-1271	1	Holder-Fuel Filter

Ref.	Part Number	Qty.	Description
110	98-7610	2	Bolt
120	130-1270	1	Fuel Pipe ASM
130	130-1172	1	Tube-Fuel
140	100-2217	2	Clip-Pipe
150	130-1222	1	Pipe-Fuel
160	98-7616	4	Clip-Pipe
170	130-1330	1	Pipe-Over Flow, Fuel
180	98-7672	6	Clip-Pipe

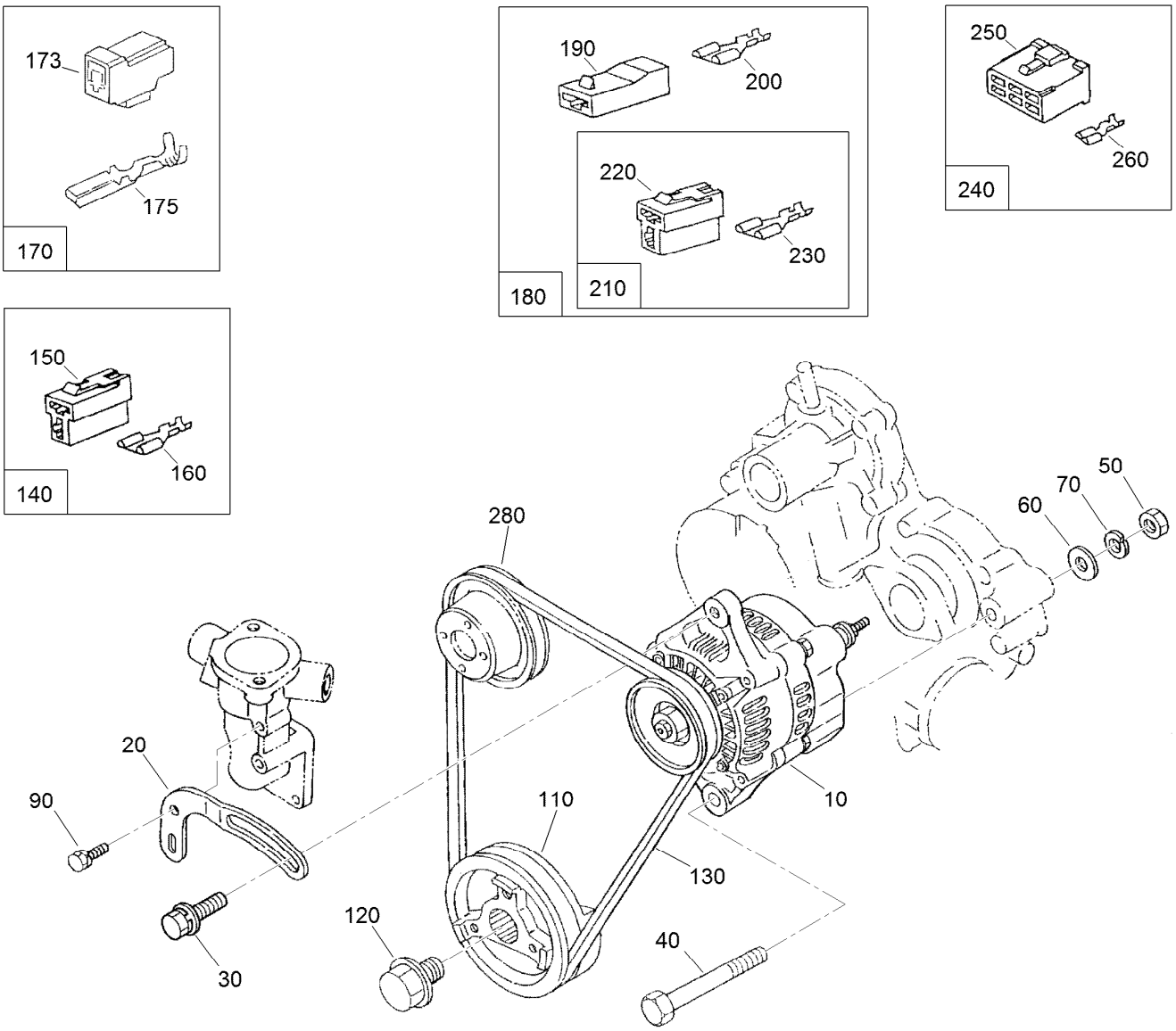

Alternator and Pulley Assembly

Ref.	Part Number	Qty.	Description
10	98-9474	1	Alternator ASM
20	112-7047	1	Stay-Dynamo
20	112-7047	1	Stay-Dynamo
30	108-7088	1	Bolt
40	98-9360	1	Bolt
50	98-7737	1	Nut
60	98-9366	1	Washer-Plain
70	98-7738	1	Washer-Spring
90	98-7692	1	Bolt
110	105-3745	1	Pulley-Drive, Fan
120	98-9585	1	Bolt
130	98-9676	1	V-Belt
140	127-1606	1	Coupler ASM
150	98-9698	1	Connector

Ref.	Part Number	Qty.	Description
160	98-9699	2	Terminal
170	115-8600	1	Coupler ASM
173	115-8601	1	Connector
175	115-8602	1	Terminal
180	130-1229	1	Relay Coupler ASM
190	130-1230	2	Connector
200	130-1228	2	Terminal
210	127-1606	1	Coupler ASM
220	98-9698	1	Connector
230	98-9699	2	Terminal
240	130-1290	1	Connector Coupler ASM
250	98-9697	1	Connector
260	98-9699	5	Terminal
280	98-9584	1	Pulley-Fan

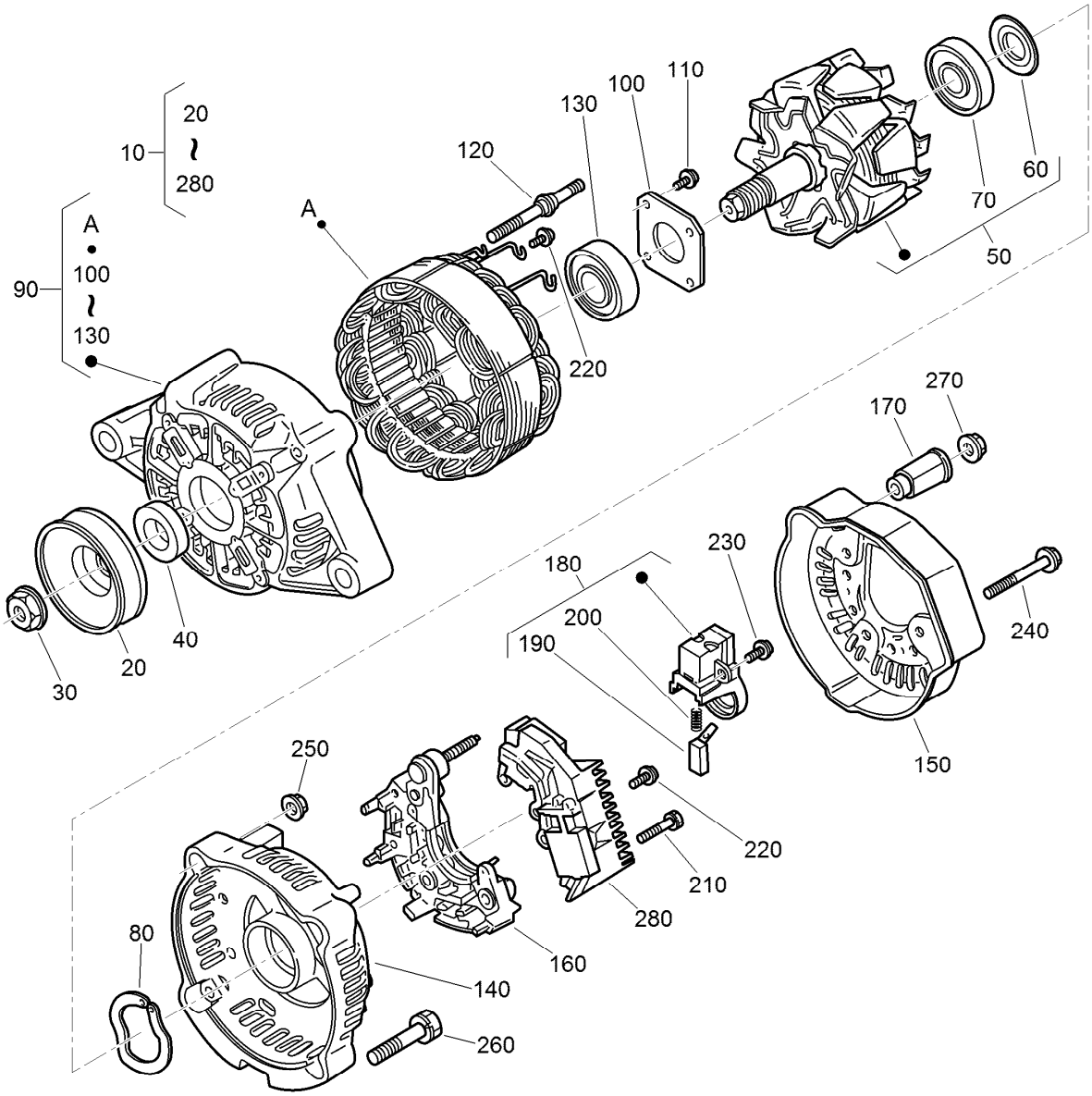

Alternator Components Assembly

Ref.	Part Number	Qty.	Description
10	98-9474	1	Alternator ASM
20	98-9453	1	Pulley-Dynamo
30	98-7708	1	Nut
40	98-7709	1	Collar
50	107-0136	1	Rotor ASM
60	98-7711	1	Cover-Bearing
70	107-0138	1	Bearing-Ball
80	98-7713	1	Washer-Thrust
90	107-0139	1	Drive End Frame ASM
100	98-7715	1	Plate-Retainer
110	98-7716	4	Screw-Head, Round
120	98-7717	2	Bolt-Through
130	107-0137	1	Bearing-Ball
140	107-9087	1	Frame-End

Ref.	Part Number	Qty.	Description
150	107-0140	1	Cover-End
160	127-1612	1	Rectifier ASM
170	98-7722	1	Bushing-Insulation
180	107-0141	1	Brush Holder ASM
190	98-7724	2	Brush
200	98-7725	2	Spring-Brush
210	98-7726	2	Screw-Head, Round
220	98-7727	6	Screw-Head, Round
230	98-7728	1	Screw-Head, Round
240	98-7729	3	Bolt
250	98-7730	2	Nut
260	98-7731	2	Bolt
270	98-7732	1	Nut
280	110-3799	1	Regulator ASM

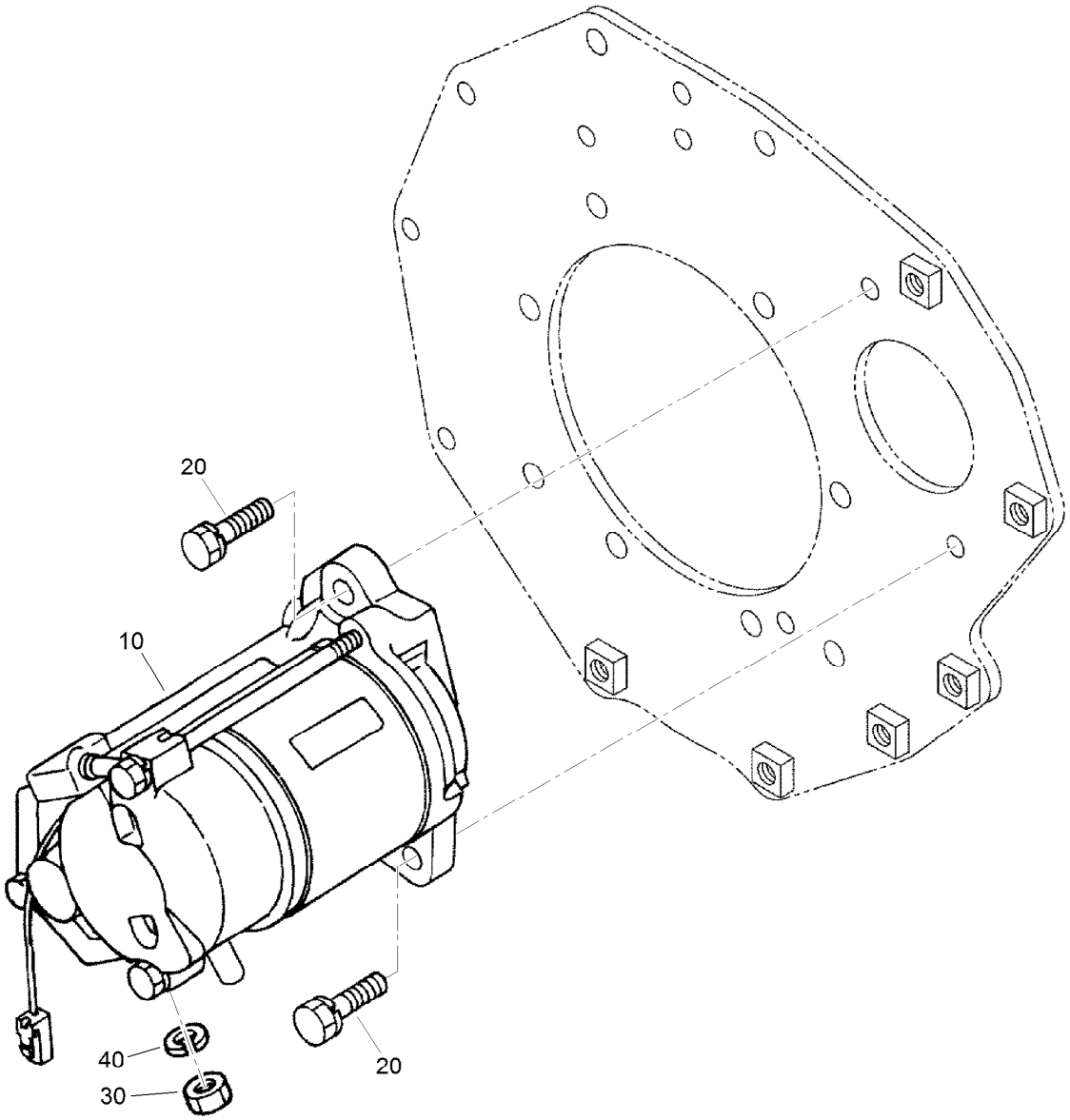

Starter Assembly

Ref.	Part Number	Qty.	Description
10	98-9705	1	Starter ASM
20	98-7697	2	Bolt
30	98-7739	1	Nut
40	105-2893	1	Washer-Spring

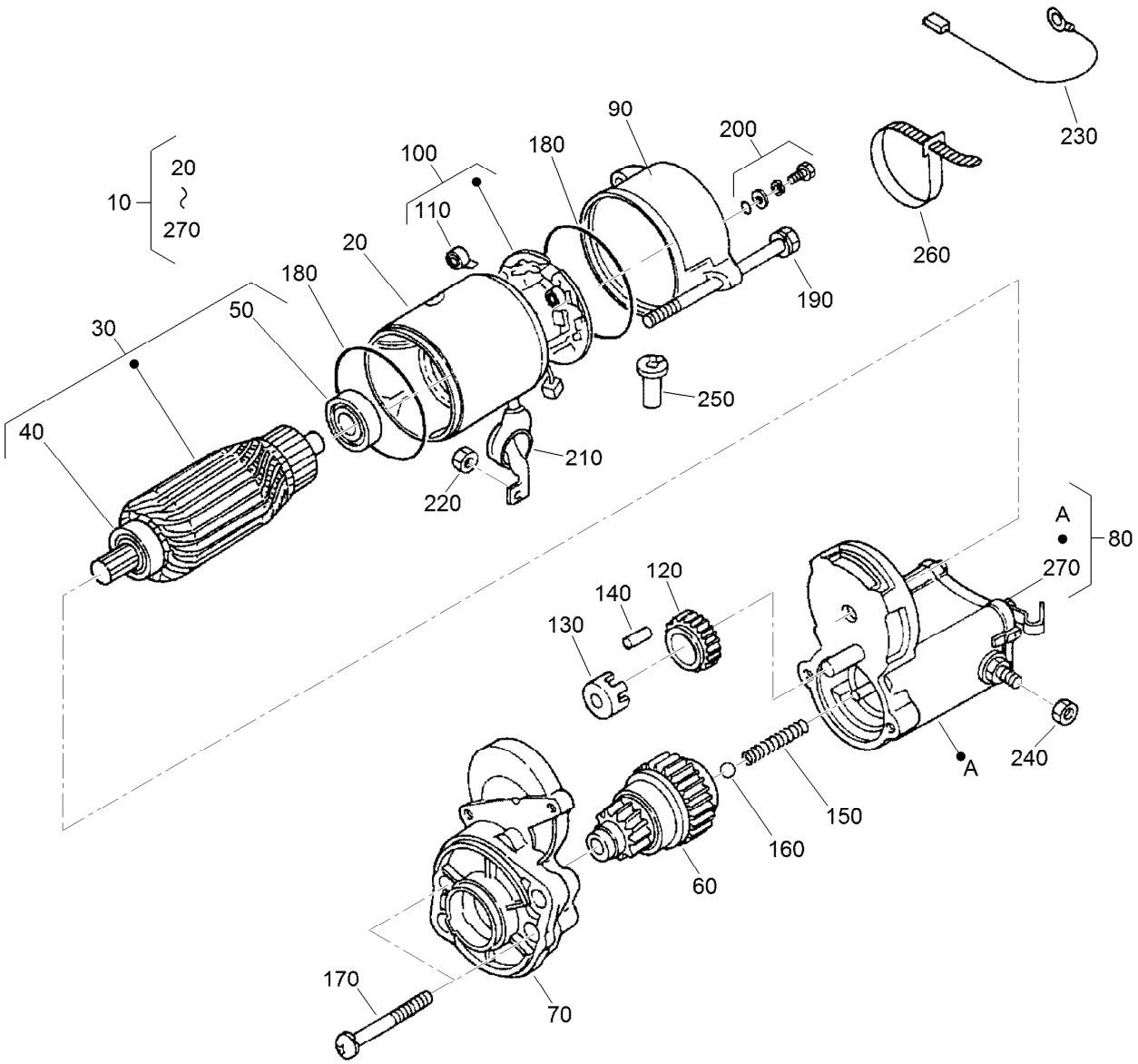

Starter (Component Part) Assembly

Ref.	Part Number	Qty.	Description
10	98-9705	1	Starter ASM
20	104-8608	1	Yoke ASM
30	98-7742	1	Armature ASM
40	98-7744	1	Bearing
50	98-7743	1	Bearing
60	99-8373	1	Clutch-Running, Over
70	99-8374	1	Frame-End, Drive
80	105-3746	1	Magnetic Switch ASM
90	98-7748	1	Frame-End
100	98-7749	1	Brush Holder ASM
110	98-7750	4	Spring-Brush
120	98-7751	1	Gear
130	98-7752	1	Retainer
140	98-7753	5	Roller

Ref.	Part Number	Qty.	Description
150	98-7754	1	Spring
160	98-7755	1	Ball
170	98-7756	2	Bolt
180	98-7757	2	O-Ring
190	100-9240	2	Bolt
200	98-7758	2	Bolt ASM
210	99-8375	1	Cover
220	99-8371	1	Nut-Hex
230	98-9711	1	Cord-Solenoid, Stop
240	99-8376	1	Nut-Hex
250	98-7759	1	Pipe-Drain
260	98-9712	1	Band-Cover
270	105-2886	1	Cover ASM

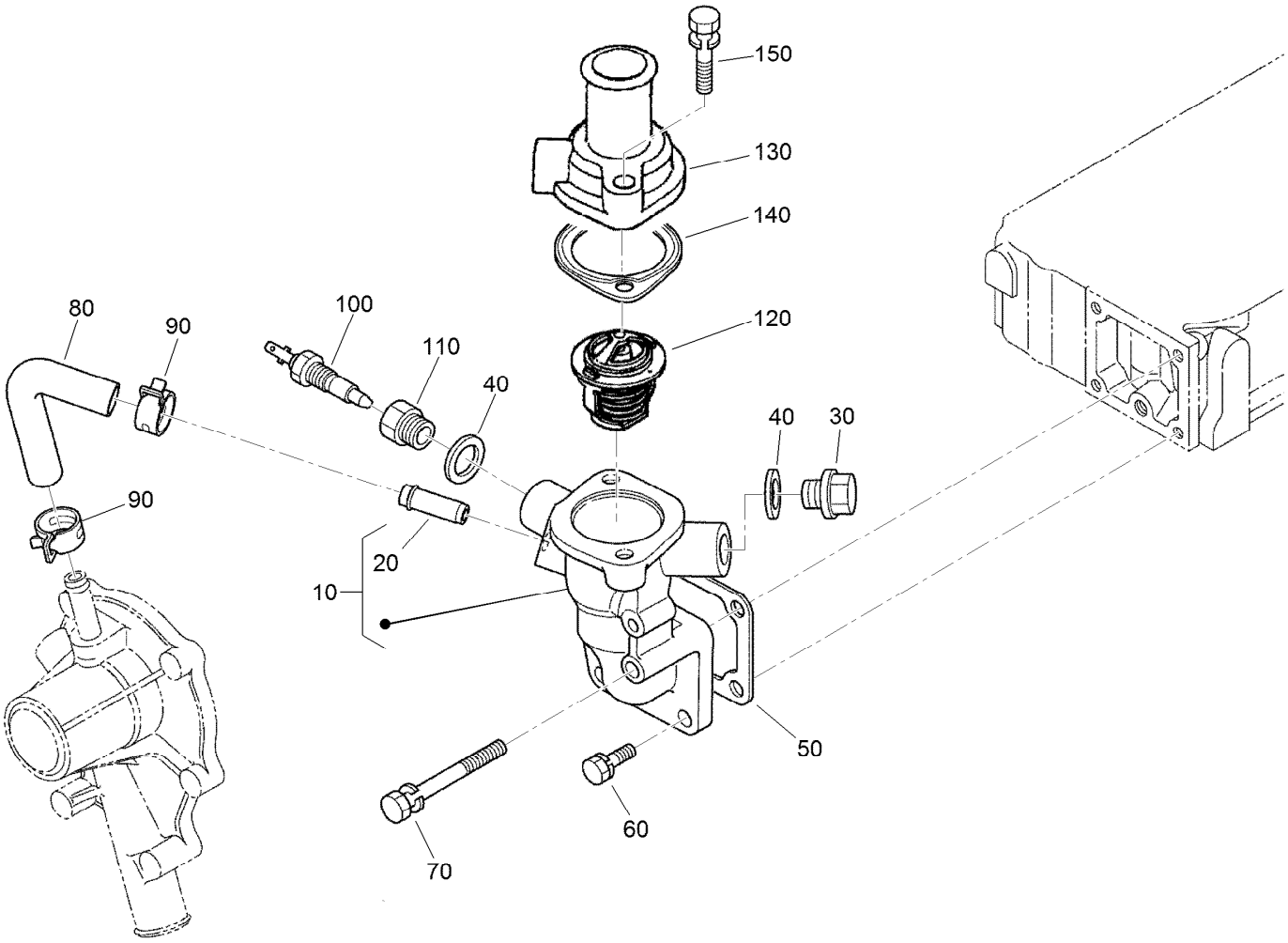

Water Flange and Thermostat Assembly

Ref.	Part Number	Qty.	Description
10	98-9713	1	Water Flange ASM
20	98-9580	1	Pipe-Return, Water
30	105-3747	1	Plug
40	99-3583	2	Gasket
50	98-9638	1	Gasket-Flange, Water
60	98-7692	3	Bolt
70	98-9356	1	Bolt
80	98-9578	1	Pipe-Return, Water
90	98-9579	2	Band-Pipe
100	100-1983	1	Thermo-Switch
110	130-1377	1	Adapter-Thermoswitch
120	98-7778	1	Thermostat ASM
130	98-9471	1	Cover-Thermostat
140	105-3748	1	Gasket-Thermostat
150	98-7777	2	Bolt

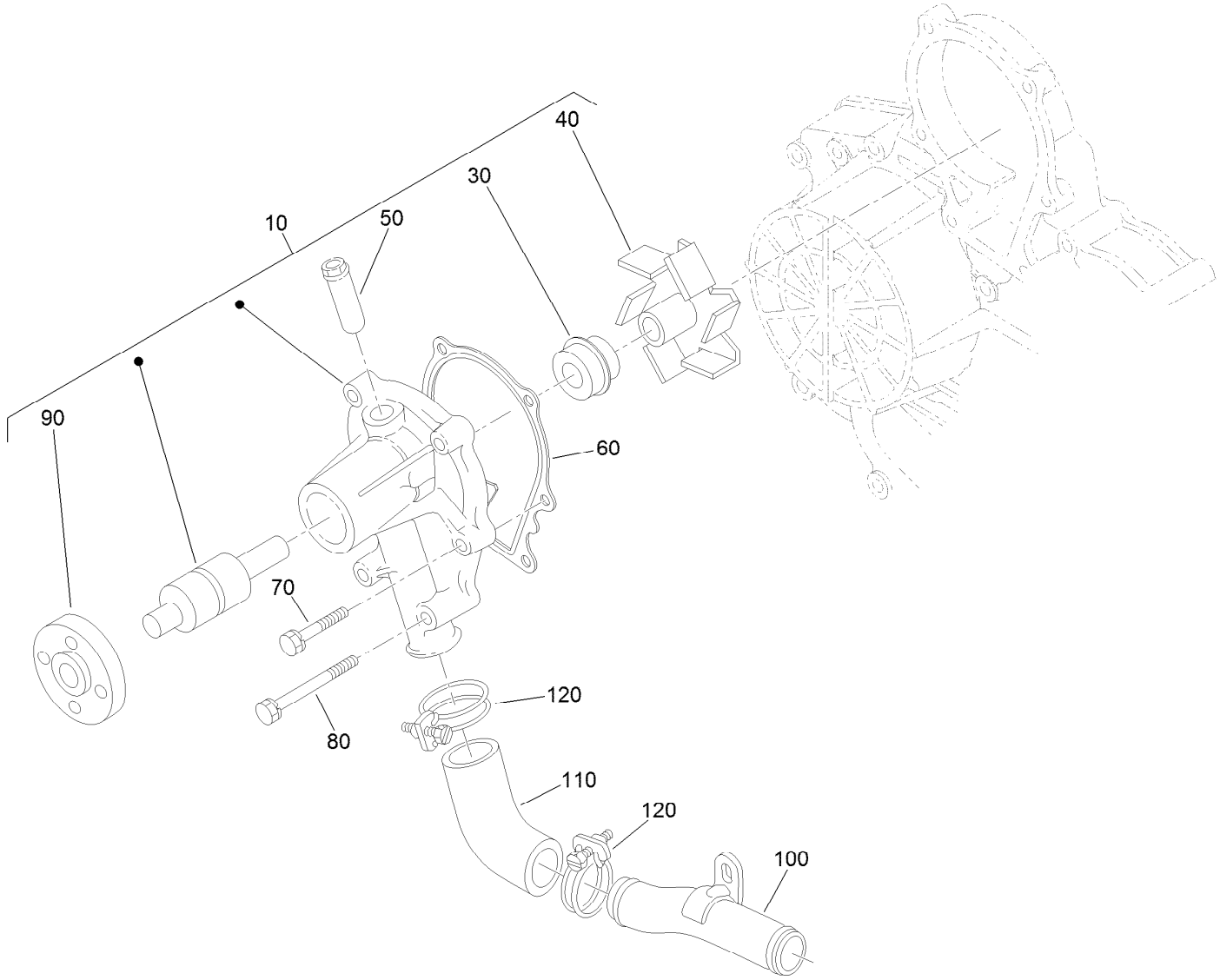

Water Pump Assembly

Ref.	*Part Number*	*Qty.*	*Description*
10	107-9089	1	Water Pump ASM
30	105-3750	1	Mechanical Seal ASM
40	112-7017	1	Impeller-Pump, Water
50	100-1932	1	Pipe-Return, Water
60	99-3454	1	Gasket-Pump, Water
70	98-9353	4	Bolt
80	107-9090	2	Bolt
90	99-3516	1	Flange-Pump, Water
100	98-9716	1	Pipe-Water
110	107-9091	1	Pipe-Water
120	98-9717	2	Clamp

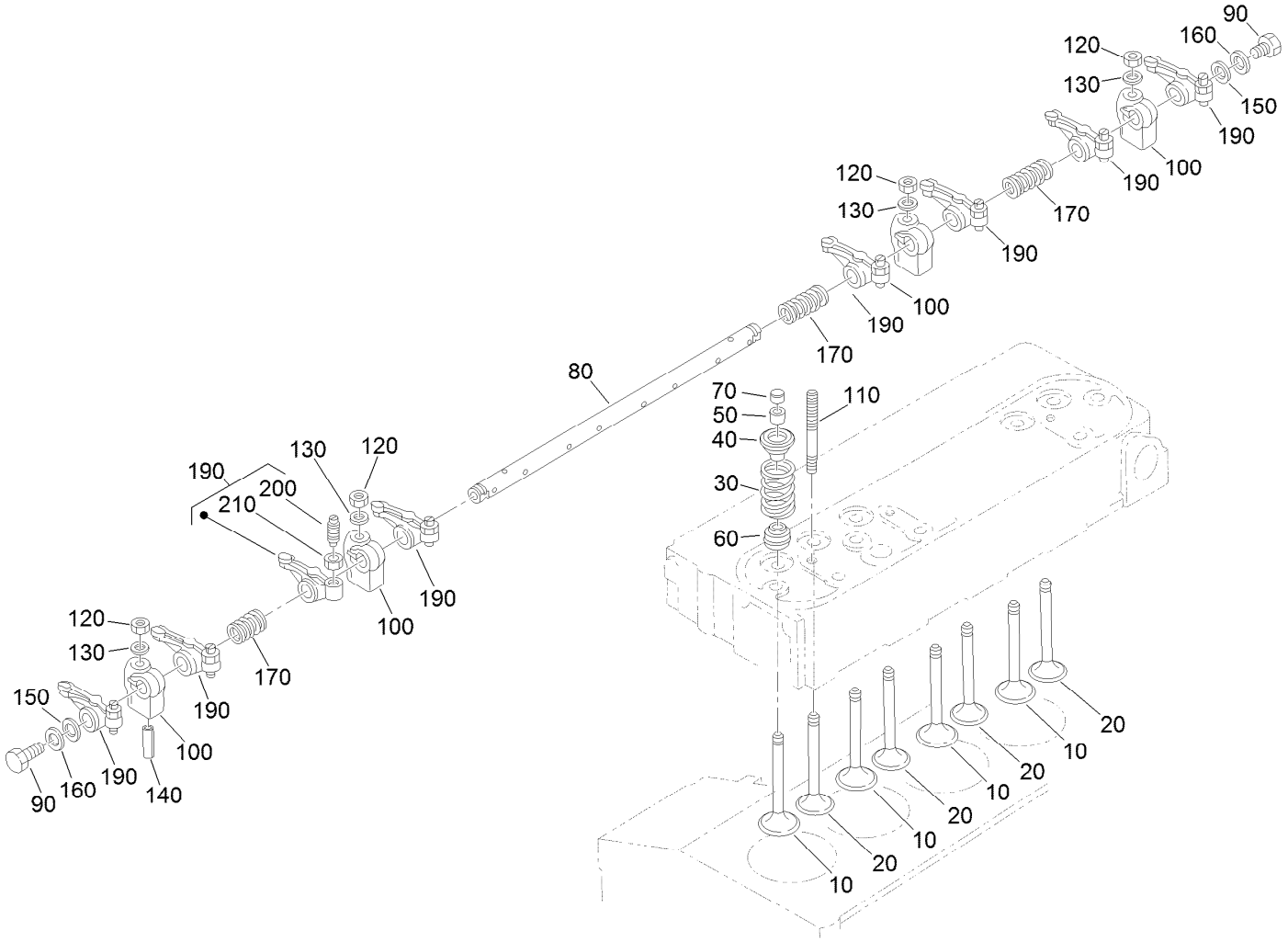

Valve and Rocker Arm Assembly

Ref.	Part Number	Qty.	Description
10	112-7018	4	Valve-Inlet
20	120-2564	4	Valve-Exhaust
30	98-9648	8	Spring-Valve
40	107-9092	8	Retainer-Spring
50	117-7572	8	Collet-Spring, Valve
60	99-8385	8	Seal-Stem, Valve
70	98-9497	8	Cap-Valve
80	127-0420	1	Shaft-Arm, Rocker
90	99-8363	2	Bolt-Flange
100	98-9505	4	Bracket-Arm, Rocker

Ref.	Part Number	Qty.	Description
110	98-9506	4	Stud
120	98-9393	4	Nut
130	98-9385	4	Washer-Flat
140	105-3758	1	Pin-Spring
150	98-9507	2	Washer-Shaft, Rocker Arm
160	110-3832	2	Washer-Plain
170	98-9504	3	Spring-Arm, Rocker
190	112-7020	8	Rocker Arm ASM
200	98-9502	8	Screw-Adjusting
210	98-9503	8	Nut

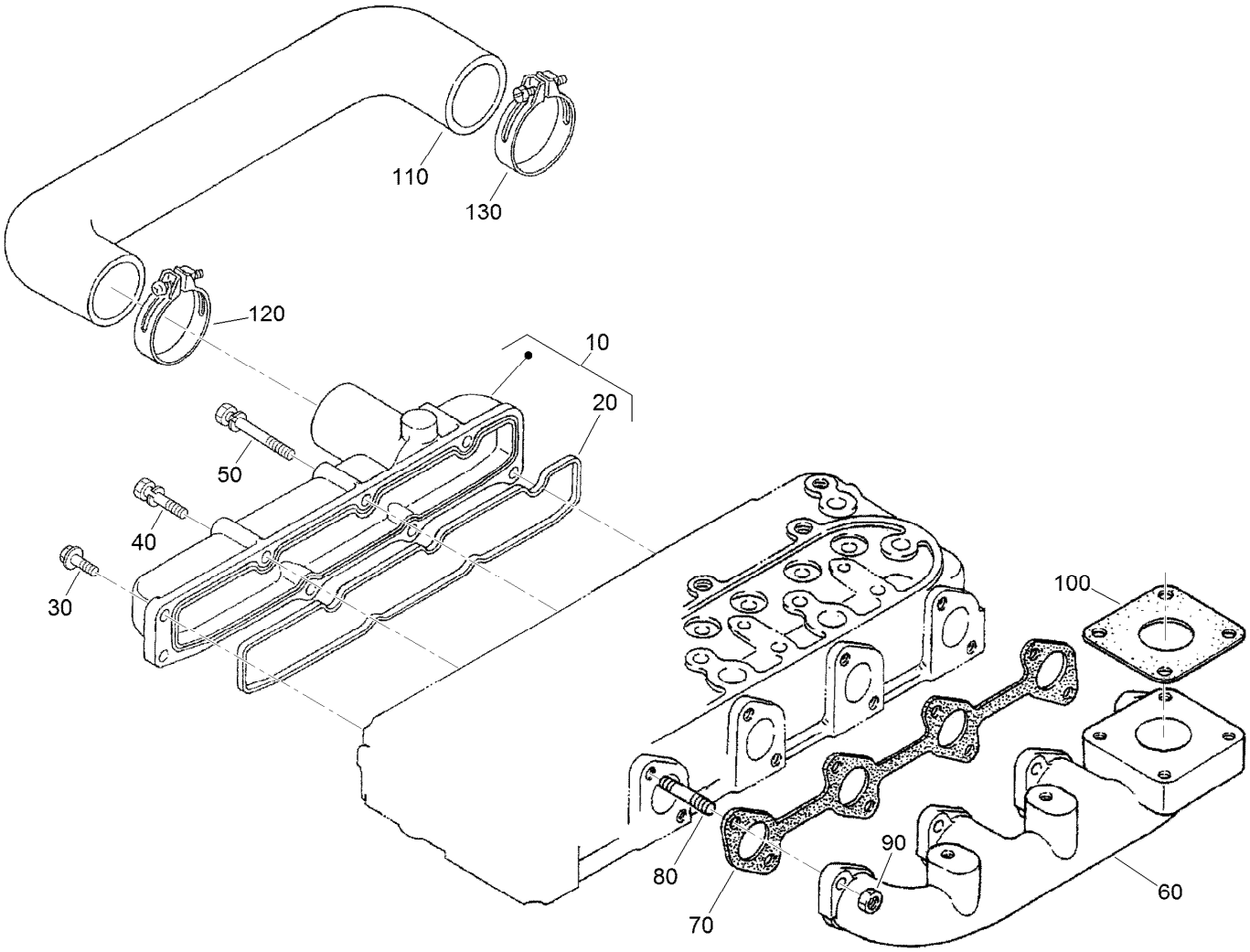

Intake and Exhaust Manifold Assembly

Ref.	*Part Number*	*Qty.*	*Description*
10	130-1257	1	Intake Manifold ASM
20	105-3760	1	Gasket-Manifold, Intake
30	127-0403	3	Bolt-Flange
40	98-9353	2	Bolt
50	125-9063	3	Bolt-Sems
60	130-1268	1	Manifold-Exhaust
70	105-3765	1	Gasket-Manifold, Exhaust
80	98-9588	8	Stud
90	98-9665	8	Nut
100	99-8343	2	Gasket-Muffler
110	130-1284	1	Pipe-Inlet
120	130-1196	2	Band-Pipe
130	130-1182	2	Band-Pipe

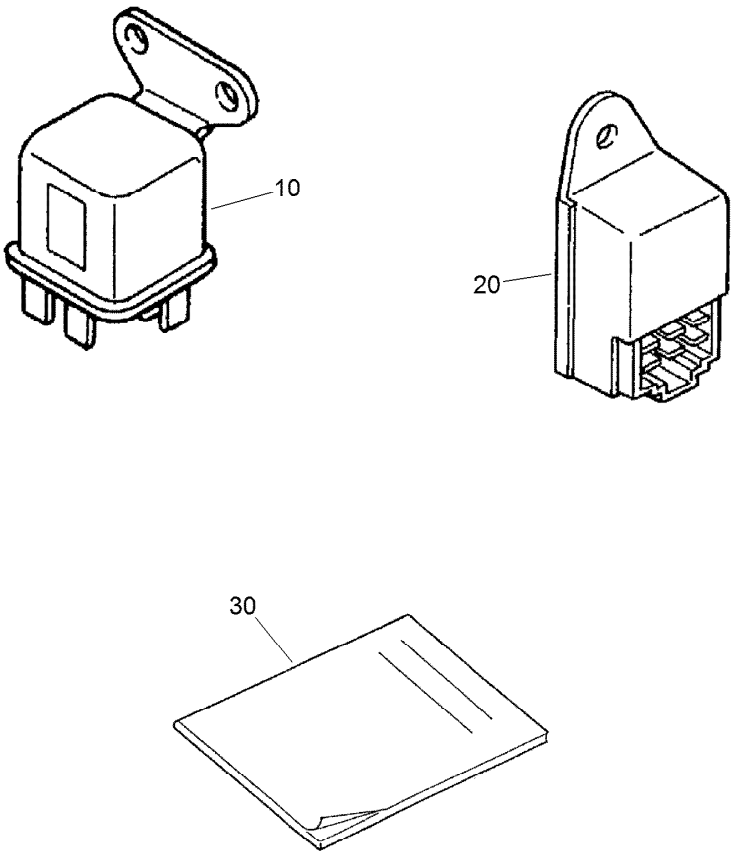

Miscellaneous Engine Parts

Ref.	*Part Number*	*Qty.*	*Description*
10	130-1244	1	Relay ASM
20	130-1211	1	Timer-Lamp, Glow
30	115-4104	1	Operator Manual

Attachments and Accessories

For 30651 Groundsmaster 3400 4-Wheel Drive Traction Unit

Product Name	Model/Part
Deluxe Replacement PVC Air Seat	02865
Deluxe Replacement Fabric Air Seat	02866
Cab Mauser KS-534 (Including Heater)	02890
Air Conditioning Kit	02891
Air Conditioning Fit Kit (CT, LT & GM)	02892
Beacon Kit	02901
12 Volt Accessory Port Kit	02902
Blower Carrier Kit	02903
LSD Lock Kit	02904
ROPS Assist Kit	02905
Waste Bin Kit	02906
Kevlar Tyre Kit	02914
Road Lights Kit W/Brake Lights	02917
TÜV Kit - Speed Decal 20kph	02980
TÜV Kit - German Vehicle Serial Plate	02983
Warning Triangle	111-4250
TÜV Kit Instructions (English)	111-5628
TÜV Kit Instructions (German)	111-5906
Fuse-In Line	111-6190
Switch-lift, Lower [Opitional, OFR]	111-7101
Base 62 Inch Mower	30645
Base 72 Inch Mower	30646

Notes:

TORO®

Count on it.