Form No. 3324-825

TORO®

8-25

Wheel Horse® Rear Engine Rider

Model No. 70122—210000001 and Up

Operator's Manual

CE

International English (GB)

This spark ignition system complies with Canadian ICES-002.

Ce système d'allumage par étincelle de véhicule est conforme à la norme NMB-002 du Canada.

Contents

	Page
Introduction	2
Safety	3
Safe Operation Practices for Ride-on (riding) Rotary Lawnmower Machines	3
Safe Operating Practices	3
Toro Riding Mower Safety	5
Sound Pressure Level	5
Sound Power Level	5
Vibration Level	5
Slope Chart	7
Safety and Instruction Decals	9
Gasoline and Oil	12
Recommended Gasoline	12
Using Stabilizer/Conditioner	12
Filling the Fuel Tank	12
Checking the Engine Oil Level	12
Assembly	13
Installing the Seat	13
Installing the Steering Wheel	14
Activating the Battery	14
Filling the Crankcase with Oil	15
Checking the Tire Pressure	15
Operation	15
Think Safety First	15
Gear Shift	15
Deck Engagement Lever (Power take off [PTO])	16
Throttle Control	16
KeyChoice Switch	16
Ignition Switch	16
Height-of-Cut Control	16
Clutch Pedal	16
Brake Pedal	16
Parking Brake	16
Starting and Stopping the Engine	16
Break-In	17
Adjusting the Height-of-Cut	17
Operating Procedure	17
The Safety Interlock System	17
Driving Forward or Backward	19
Stopping the Machine	19
Positioning the Seat	19
Side Discharge	19
Tips for Mowing Grass	20
Tips For Cutting Leaves	20
Maintenance	21
Recommended Maintenance Schedule	21
Engine Oil	22
Cleaning the Cooling System	22
Brake	23
Greasing and Lubrication	23
Air Cleaner	24
Spark Plug	25
Tire Pressure	25
Draining the Fuel Tank	26
Battery	26
Servicing the Cutting Blade	28
Removing and Installing the Cutting Unit	29
Replacing the Blade Drive Belt	30
Replacing the Traction Drive Belt	31
Checking and Adjusting the Drive Chain	31
Wiring Diagram	33
Washing the Underside of the Mower	34
Cleaning and Storage	34
Troubleshooting	35

Introduction

Read this manual carefully to learn how to operate and maintain your product properly. The information in this manual can help you and others avoid injury and product damage. Although Toro designs and produces safe products, you are responsible for operating the product properly and safely.

Whenever you need service, genuine Toro parts, or additional information, contact an Authorized Service Dealer or Toro Customer Service and have the model and serial numbers of your product ready. Figure 1 illustrates the location of the model and serial numbers on the product.

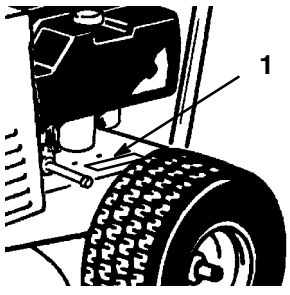

2363

Figure 1

1. Location of the model and serial numbers

© 2000 by The Toro Company
8111 Lyndale Avenue South
Bloomington, MN 55420-1196

All Rights Reserved
Printed in the USA

Write the product model and serial numbers in the space below:

Model No. _____

Serial No. _____

This manual identifies potential hazards and has special safety messages that help you and others avoid personal injury and even death. ***Danger***, ***Warning***, and ***Caution*** are signal words used to identify the level of hazard. However, regardless of the hazard, be extremely careful.

Danger signals an extreme hazard that *will* cause serious injury or death if you do not follow the recommended precautions.

Warning signals a hazard that *may* cause serious injury or death if you do not follow the recommended precautions.

Caution signals a hazard that may cause minor or moderate injury if you do not follow the recommended precautions.

This manual uses two other words to highlight information. **Important** calls attention to special mechanical information and **Note:** emphasizes general information worthy of special attention.

Safety

Safe Operation Practices for Ride-on (riding) Rotary Lawnmower Machines

This machine meets or exceeds European Standards in effect at the time of production. However, improper use or maintenance by the operator or owner can result in injury. To reduce the potential for injury, comply with these safety instructions and always pay attention to the safety alert ⚠ symbol, which means CAUTION, WARNING, or DANGER—"personal safety instruction." Failure to comply with the instruction may result in personal injury or death.

Safe Operating Practices

The following instructions are from the CEN standard EN 836:1997.

This product is capable of amputating hands and feet and throwing objects. Always follow all safety instructions to avoid serious injury or death.

Training

- Read the instructions carefully. Be familiar with the controls and the proper use of the equipment.
- Never allow children or people unfamiliar with these instructions to use the lawnmower. Local regulations can restrict the age of the operator.
- Never mow while people, especially children, or pets are nearby.
- Keep in mind that the operator or user is responsible for accidents or hazards occurring to other people or their property.
- Do not carry passengers.
- All drivers should seek and obtain professional and practical instruction. Such instruction should emphasize:
  - the need for care and concentration when working with ride-on machines;
  - control of a ride-on machine sliding on a slope will not be regained by the application of the brake. The main reasons for loss of control are:
    - insufficient wheel grip;
    - being driven too fast;
    - inadequate braking;
    - the type of machine is unsuitable for its task;
    - lack of awareness of the effect of ground conditions, especially slopes;
    - incorrect hitching and load distribution.

Preparation

- While mowing, always wear substantial footwear and long trousers. Do not operate the equipment when barefoot or wearing open sandals.
- Thoroughly inspect the area where the equipment is to be used and remove all objects which may be thrown by the machine.
- WARNING - Fuel is highly flammable.
  - Store fuel in containers specifically designed for this purpose.
  - Refuel outdoors only and do not smoke while refuelling.
  - Add fuel before starting the engine. Never remove the cap of the fuel tank or add fuel while the engine is running or when the engine is hot.

- If fuel is spilled, do not attempt to start the engine but move the machine away from the area of spillage and avoid creating any source of ignition until fuel vapors have dissipated.
- Replace all fuel tanks and container caps securely.

- Replace faulty silencers.
- Before using, always visually inspect to see that the blades, blade bolts and cutter assembly are not worn or damaged. Replace worn or damaged blades and bolts in sets to preserve balance.
- On multi-bladed machines, take care as rotating one blade can cause other blades to rotate.

Operation

- Do not operate the engine in a confined space where dangerous carbon monoxide fumes can collect.
- Mow only in daylight or in good artificial light.
- Before attempting to start the engine, disengage all blade attachment clutches and shift into neutral.
- Do not use on slopes of more than
  - 5° when mowing on side hills;
  - 10° when mowing uphill;
  - 15° when mowing downhill.
- Remember there is no such thing as a “safe” slope. Travel on grass slopes requires particular care. To guard against overturning:
  - do not stop or start suddenly when going up or downhill;
    - engage clutch slowly, always keep machine in gear, especially when travelling downhill;
  - machine speeds should be kept low on slopes and during tight turns;
  - stay alert for humps and hollows and other hidden hazards;
  - never mow across the face of the slope, unless the lawnmower is designed for this purpose.
- Use care when pulling loads or using heavy equipment.
  - Use only approved drawbar hitch points.
  - Limit loads to those you can safely control.
  - Do not turn sharply. Use care when reversing.
  - Use counterweight(s) or wheel weights when suggested in the instruction handbook.
- Watch out for traffic when crossing or near roadways.
- Stop the blades rotating before crossing surfaces other than grass.
- When using any attachments, never direct discharge of material toward bystanders nor allow anyone near the machine while in operation.
- Never operate the machine with defective guards or without safety protective devices in place.
- Do not change the engine governor settings or overspeed the engine. Operating the engine at excessive speed can increase the hazard of personal injury.
- Before leaving the operator’s position:
  - disengage the power take-off and lower the attachments;
  - change into neutral and set the parking brake;
  - stop the engine and remove the key.
- Disengage drive to attachments, stop the engine, and disconnect the spark plug wire(s) or remove the ignition key
  - before clearing blockages or unclogging chute;
  - before checking, cleaning or working on the lawnmower;
  - after striking a foreign object. Inspect the lawnmower for damage and make repairs before restarting and operating the equipment;
  - if the machine starts to vibrate abnormally (check immediately).
- Disengage drive to attachments when transporting or not in use.
- Stop the engine and disengage drive to attachment
  - before refuelling;
  - before removing the grass catcher;
  - before making height adjustment unless adjustment can be made from the operator’s position.
- Reduce the throttle setting during engine run-out and, if the engine is provided with a shut-off valve, turn the fuel off at the conclusion of mowing.

Maintenance and Storage

- Keep all nuts, bolts and screws tight to be sure the equipment is in safe working condition.
- Never store the equipment with fuel in the tank inside a building where fumes can reach an open flame or spark.
- Allow the engine to cool before storing in any enclosure.

- To reduce the fire hazard, keep the engine, silencer, battery compartment and fuel storage area free of grass, leaves, or excessive grease.
- Check the grass catcher frequently for wear or deterioration.
- Replace worn or damaged parts for safety.
- If the fuel tank has to be drained, this should be done outdoors.
- On multi-bladed machines, take care as rotating one blade can cause other blades to rotate.
- When machine is to be parked, stored or left unattended, lower the cutting means unless a positive mechanical lock is used.

Toro Riding Mower Safety

The following list contains safety information specific to Toro products or other safety information that you must know that is not included in the CEN standard.

- Use only Toro-approved attachments. Warranty may be voided if used with unapproved attachments.

Sound Pressure Level

This unit has an equivalent continuous A-weighted sound pressure at the operator ear of: 90 dB(A), based on measurements of identical machines per procedures outlined in Directive 84/538/EEC and amendments.

Sound Power Level

This unit has a sound power level of: 100 Lwa, based on measurements of identical machines per procedures outlined in Directive 84/538/EEC and amendments.

Vibration Level

This unit has a maximum hand-arm vibration level of 4.3 m/s^2 and whole body vibration level of 0.5 m/s^2, based on measurements of identical machines per EN 1033 and EN 1032.

Slope Chart

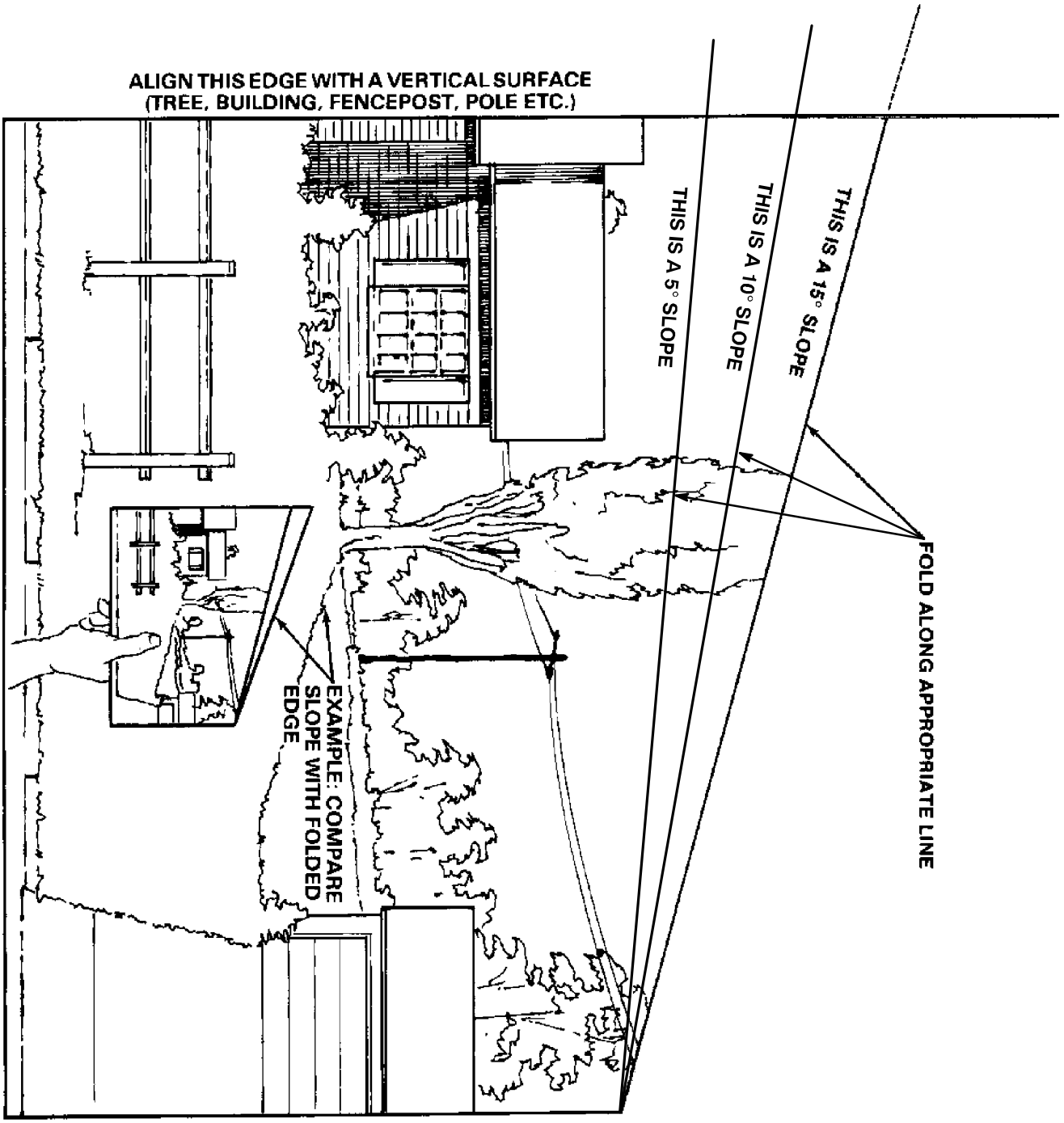
ALIGN THIS EDGE WITH A VERTICAL SURFACE
(TREE, BUILDING, FENCEPOST, POLE ETC.)
THIS IS A 5° SLOPE
THIS IS A 10° SLOPE
THIS IS A 15° SLOPE
FOLD ALONG APPROPRIATE LINE
EXAMPLE: COMPARE SLOPE WITH FOLDED EDGE

Safety and Instruction Decals

Safety decals and instructions are easily visible to the operator and are located near any area of potential danger. Replace any decal that is damaged or lost.



Part No. 93-7328

1. Read the operator's manual for the correct engine oil level.

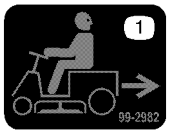

Part No. 99-2982

1. Operating-in-reverse

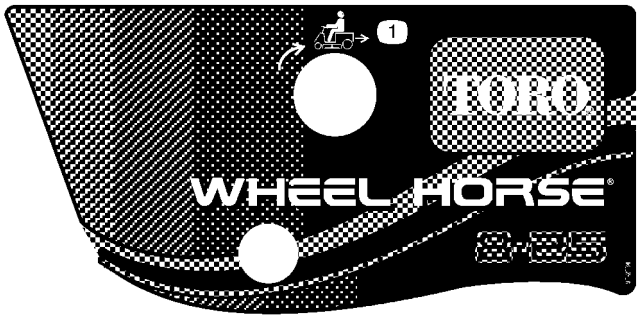

Part No. 99-2984

1. Operating -in-reverse control

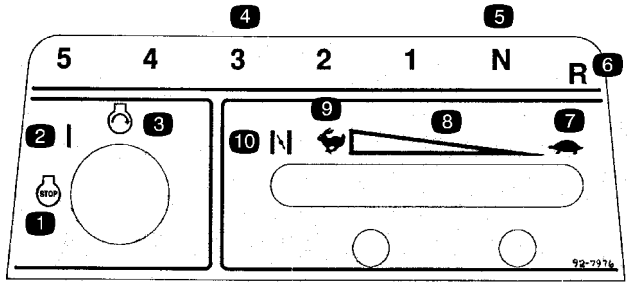

Part No. 92-7976

1. Engine stop
2. Engine run
3. Engine start
4. Gears
5. Neutral
6. Reverse
7. Slow
8. Variable speed
9. Fast
10. Choke

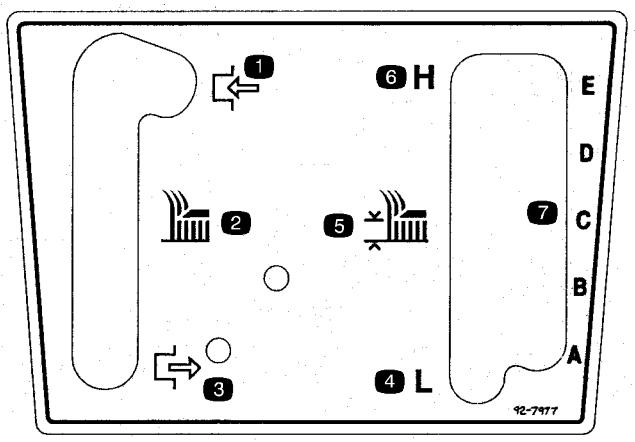

Part No. 92-7977

1. Engage
2. Blade control
3. Disengage
4. Low
5. Blade height adjustment
6. High
7. Heights of cut

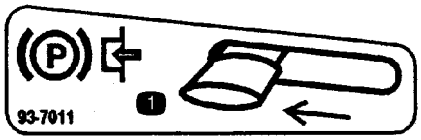

Part No. 93-7011

1. Slide the lever in the direction of the arrow to engage the parking brake.

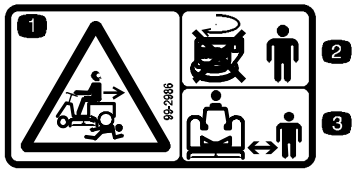

Part No. 99-2986

1. Crushing and dismemberment hazard—look back and down while backing up.
2. Do not activate the operating-in-reverse feature when bystanders are present.
3. Keep children away.

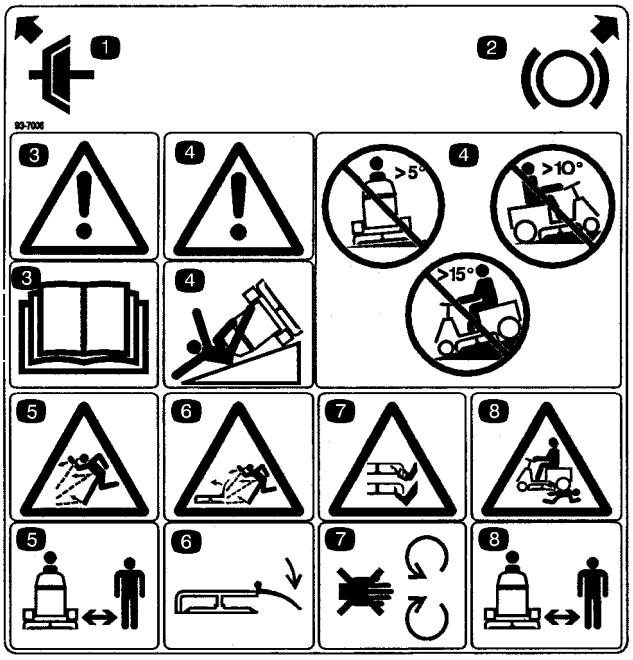

Part No. 93-7006

1. Clutch
2. Brake
3. Danger—read and understand the operator's manual.
4. Danger—tipping hazard. Do not go across slopes greater than 5 degrees, up slopes greater than 10 degrees, or down slopes greater than 15 degrees.
5. Thrown object hazard—keep bystanders away.
6. Thrown object hazard from mower—keep the deflector in place.
7. Cutting/dismemberment hazard of hands and feet—stay away from rotating blades and moving parts.
8. Crushing/dismemberment hazard—keep bystanders away.

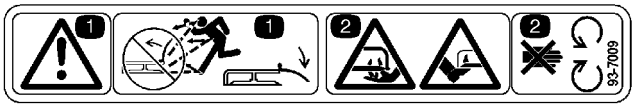

Part No. 93-7009

1. Thrown object hazard from mower—keep the deflector in place.
2. Cutting/dismemberment hazard of hands and feet—stay away from rotating blades and moving parts.

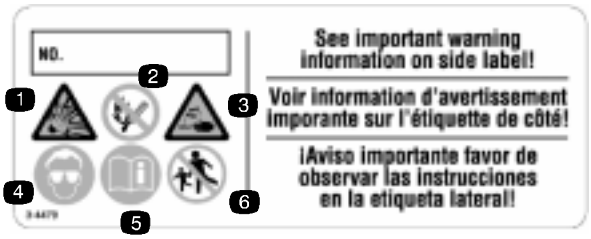

Part No. 104-4163

1. Explosion hazard
2. No sparks, flame, or smoking
3. Caustic liquid hazard—burns to hand and damage to items
4. Wear eye protection
5. Read the operator's manual
6. Keep bystanders away

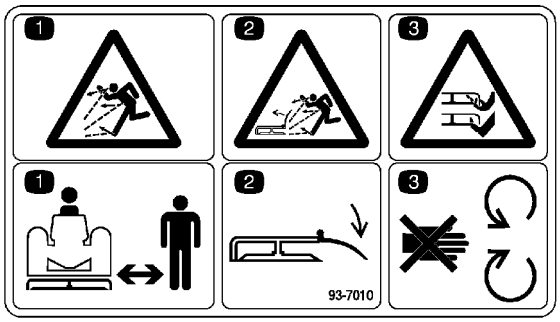

Part No. 93-7010

1. Thrown objects hazard—keep bystanders away.
2. Thrown object hazard from mower—keep the deflector in place.
3. Cutting/dismemberment hazard of hands and feet—stay away from rotating blades and moving parts.



Part No. 104-4164

1. Contains lead,—do not throw the battery in the garbage.
2. Recycle
3. Wear eye protection—explosive gases can cause blindness and other injuries.
4. No sparks, flame, or smoking
5. Sulfuric acid can cause blindness or severe burns.
6. Flush eyes immediately with water and get medical help fast.
7. Maximum fill line
8. Minimum fill line
9. Instructions for activating the battery.

Gasoline and Oil

Recommended Gasoline

Use UNLEADED Regular Gasoline suitable for automotive use (85 pump octane minimum). Leaded regular gasoline may be used if unleaded regular is not available.

Important Never use methanol, gasoline containing methanol, or gasohol containing more than 10% ethanol because the fuel system could be damaged. Do not mix oil with gasoline.

Danger

In certain conditions, gasoline is extremely flammable and highly explosive. A fire or explosion from gasoline can burn you and others and can damage property.

- **Fill the fuel tank outdoors, in an open area, when the engine is cold. Wipe up any gasoline that spills.**
- **Do not fill the fuel tank completely full. Add gasoline to the fuel tank until the level is 1/4 to 1/2 in. (6 to 13 mm) below the bottom of the filler neck. This empty space in the tank allows gasoline to expand.**
- **Never smoke when handling gasoline, and stay away from an open flame or where gasoline fumes may be ignited by a spark.**
- **Store gasoline in an approved container and keep it out of the reach of children. Never buy more than a 30-day supply of gasoline.**
- **Always place gasoline containers on the ground away from your vehicle before filling.**
- **Do not fill gasoline containers inside a vehicle or on a truck or trailer bed because interior carpets or plastic truck bed liners may insulate the container and slow the loss of any static charge.**
- **When practical, remove gas-powered equipment from the truck or trailer and refuel the equipment with its wheels on the ground.**
- **If this is not possible, then refuel such equipment on a truck or trailer from a portable container, rather than from a gasoline dispenser nozzle.**
- **If a gasoline dispenser nozzle must be used, keep the nozzle in contact with the rim of the fuel tank or container opening at all times until fueling is complete.**

Using Stabilizer/Conditioner

Use a fuel stabilizer/conditioner in the machine to provide the following benefits:

- Keeps gasoline fresh during storage of 90 days or less. For longer storage, drain the fuel tank.
- Cleans the engine while it runs
- Eliminates gum-like varnish buildup in the fuel system, which causes hard starting

Important Do not use fuel additives containing methanol or ethanol.

Add the correct amount of gas stabilizer/conditioner to the gas.

Note: A fuel stabilizer/conditioner is most effective when mixed with fresh gasoline. To minimize the chance of varnish deposits in the fuel system, use fuel stabilizer at all times.

Filling the Fuel Tank

1. Shut the engine off and set the parking brake.
2. Clean around the fuel tank cap and remove the cap. Add unleaded regular gasoline to the fuel tank until the level is 1/4 to 1/2 in. (6 to 13 mm) below the bottom of the filler neck. This space in the tank allows gasoline to expand. Do not fill the fuel tank completely full.
3. Install the fuel tank cap securely. Wipe up any gasoline that may have spilled.

Checking the Engine Oil Level

Before you start the engine and use the machine, check the oil level in the engine crankcase; refer to Checking the Oil Level, page 22.

Assembly

Note: Determine the left and right sides of the machine from the normal operating position.

Description	Qty.	Use
Seat Clamp Washer, 5/16 in. Screw, 5/16 x 3/4 in.	1 1 4 4	Installing the seat
Steering wheel Roll pin Spacer	1 1 1	Installing the steering wheel
Screw, 1/4 x 3/4 in. Wing nut, 1/4 in.	2 2	Securing the battery cables to the battery
Key	2	Used in the ignition and KeyChoice™ switches
Operator's manual	1	Read before operating the tractor.
Registration card	1	Fill out and return to Toro.
Hang tag	1	Read for warranty information.

Installing the Seat

1. Position the seat onto the seat base, inserting the seat switch cable through the slot and aligning the mounting holes (Fig. 2).

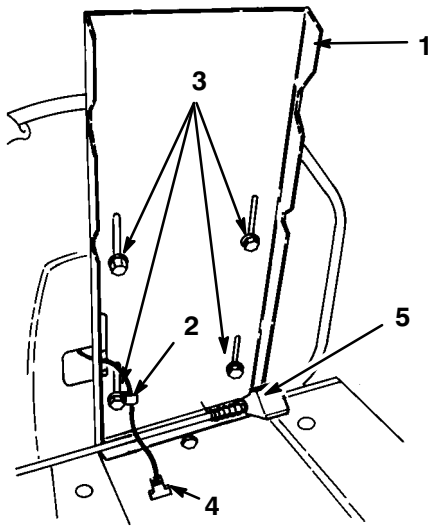

Figure 2

1. Seat base
2. Clamp
3. Screws and washers
4. Connector
5. Seat prop latch

2. Slide the clamp over the seat switch wire (Fig. 2).
3. Using the left front mounting slot in the seat base, loosely secure the clamp and seat to the seat base with a screw (5/16 x 3/4 in.) and washer (5/16 in.) (Fig. 2).
4. Mount the seat to the seat base with the remaining screws (5/16 x 3/4 in.) and washers (5/16 in.).

Note: The seat may be adjusted for operator comfort by positioning the seat as desired in the seat base slots.

5. Tighten all locknuts.
6. Insert the seat switch connector into the wire harness connector.

Installing the Steering Wheel

1. Position wheels straight ahead.
2. Slip the spacer onto steering shaft until the groove in the spacer fits over the roll pin in the shaft (Fig. 3).

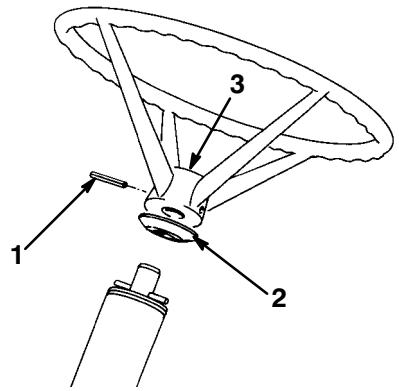

Figure 3

1. Roll pin
2. Spacer
3. Steering wheel insert

3. Slip the steering wheel over the shaft and align the steering wheel mounting hole with the shaft mounting hole (Fig. 3). The Toro logo on the steering wheel insert should be readable from the operator's position.
4. Insert a drift punch partially through the holes to maintain the alignment and insert the roll pin in from the opposite side.
5. Drive the roll pin in until it is flush with the outside of the wheel (Fig. 3).

Activating the Battery

Warning

Battery posts, terminals, and related accessories contain lead and lead compounds, chemicals known to the State of California to cause cancer and reproductive harm. ***Wash hands after handling.***

Bulk electrolyte with 1.260 specific gravity must be purchased from a local battery supply outlet.

Important Never fill the battery with electrolyte while the battery is installed in the tractor. Electrolyte could be spilled on other parts and cause corrosion.

1. Remove the battery from the tractor; refer to Removing the Battery, page 26.

Danger

Battery electrolyte contains sulfuric acid which is a deadly poison and causes severe burns.

- **Do not drink electrolyte and avoid contact with skin, eyes or clothing. Wear safety glasses to shield your eyes and robber gloves to protect your hands.**
- **Fill the battery where clean water is always available for flushing the skin.**
- **Follow all instructions and comply with all safety messages on the electrolyte container.**

2. Remove the vent caps from the battery. Slowly pour electrolyte into each battery cell until the electrolyte level is up to the Upper line on the battery case (Fig. 4).

Important Do not overfill the battery because electrolyte (sulfuric acid) can cause severe corrosion and damage to the chassis.

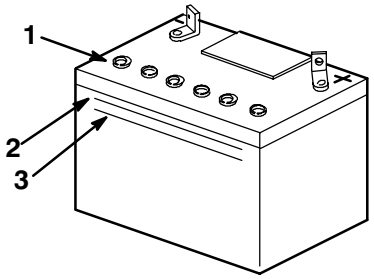

m–5004

Figure 4

1. Vent caps
2. Upper line
3. Lower line

3. Wait five to ten minutes after filling the battery cells. Add electrolyte, if necessary, until the electrolyte level is up to the Upper line (Fig. 4) on the battery case.
4. Reinstall the battery vent caps.
5. Charge the battery for 10 to 15 minutes at 25 to 30 amps or 30 minutes at 4-6 amps (Fig. 5). Do not overcharge the battery.

Warning

Charging the battery produces gasses that can explode.

Never smoke near the battery and keep sparks and flames away from battery.

6. When the battery is fully charged, unplug the charger from the electrical outlet, then disconnect the charger leads from the battery posts (Fig. 5).

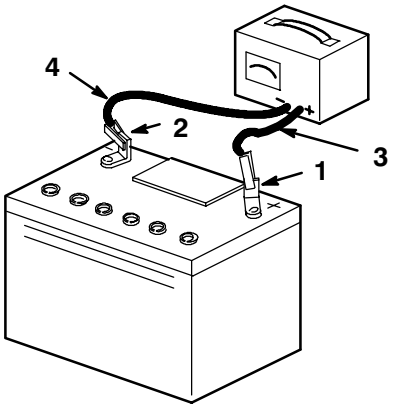

Figure 5

1. Positive post
2. Negative post
3. Charger red (+) wire
4. Charger black (–) wire

7. Install the battery and battery box in the tractor and connect the battery cables; refer to Installing the Battery, page 27.

Filling the Crankcase with Oil

The tractor is shipped from the factory without oil in the crankcase.

1. Place the tractor on a level surface.
2. Unscrew and remove the dipstick from the oil fill tube (Fig. 6).

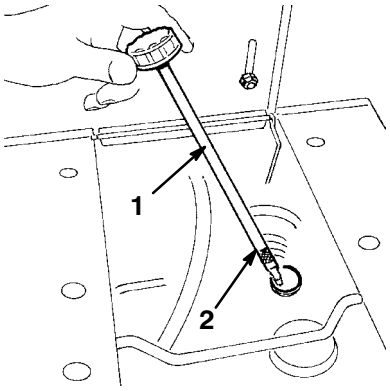

Figure 6

1. Dipstick
2. Full mark

3. Insert a funnel into the tube and slowly add engine oil into the crankcase until the oil level reaches the full mark on the dipstick; refer to Engine Oil, page 22, for crankcase capacity, oil type, and oil viscosity.

Important Do not overfill or engine damage may result.

4. Insert the dipstick and turn it clockwise to secure it in the fill tube.

Note: Drain the oil and replace it after the first 5 hours of operation to remove the contaminants produced by normal engine break-in. Thereafter, change the oil as specified in the maintenance section.

Checking the Tire Pressure

Check the front and rear tires for proper inflation; refer to Tire Pressure, page 25.

Operation

Note: Determine the left and right sides of the machine from the normal operating position.

Think Safety First

Please carefully read all of the safety instructions and decals in the safety section. Knowing this information could help you, your family, pets, or bystanders avoid injury.

Become familiar with all of the controls before you start the engine and operate the machine.

Gear Shift

The transaxle has five forward speeds, neutral, and reverse. The gear shift lever is located at the right side of the operator (Fig. 7). An interlock switch prevents the engine from being started when the transaxle is in any gear except neutral.

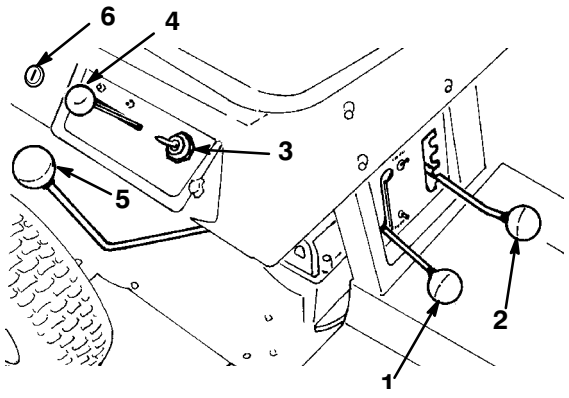

Figure 7

1. Deck engagement lever (PTO)
2. Height-of-cut control
3. Ignition switch
4. Throttle control
5. Gear shift
6. KeyChoice switch

Deck Engagement Lever (Power take off [PTO])

The deck engagement lever (PTO) (Fig. 7) engages and disengages the cutter blade. An interlock switch prevents the engine from starting when the control is in the Engage position. The engine will start when the control is in the Disengage position only.

Throttle Control

The throttle control (Fig. 7) connects to and operates carburetor mounted throttle and choke. The control has four positions: Idle, Hot Restart, Operate, and Choke. Push the control slightly to the left and upward to obtain the Choke position.

KeyChoice Switch

Turn and release the KeyChoice switch (Fig. 7) to deactivate the operating-in-reverse interlock feature.

Ignition Switch

The ignition switch (Fig. 7) has three positions: Off, On, and Start. The key automatically returns to the On position from the Start position when it is released after the engine starts.

Height-of-Cut Control

The height-of-cut control (Fig. 7) varies the cutting height from approximately 1-1/2 to 3-1/2 inches (38 to 89 mm) in five increments.

Clutch Pedal

The clutch pedal (Fig. 8) is used in conjunction with the gear shift. Depress the clutch pedal fully when shifting gears and whenever the brake is used.

Brake Pedal

The brake pedal (Fig. 8) must be depressed to slow down or stop the tractor. When the pedal is depressed, a caliper engages the brake disc at the side of the transaxle. Remember to depress the clutch pedal whenever the brake is used.

Note: Avoid depressing the brake pedal while the clutch is engaged, otherwise premature brake wear will occur. Do not rest your foot on the pedal while mowing.

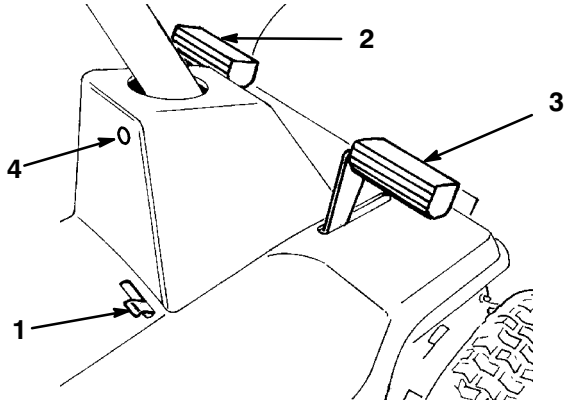

Figure 8

1. Parking brake
2. Clutch pedal
3. Brake pedal
4. Operating-in-reverse light

Parking Brake

The parking brake (Fig. 8) must be used in conjunction with the brake pedal. When the pedal is depressed, the end of the parking brake lever holds the brake pedal in the depressed position and a caliper engages the brake disc at the side of the transaxle.

Always set the parking brake when you stop the machine or leave it unattended.

Setting the Parking Brake

1. Depress the brake pedal fully and shift the transaxle into neutral.
2. Move the parking brake control (Fig. 8) sideward and release the brake pedal.

Releasing the Parking Brake

To release the parking brake, depress the brake pedal. The parking brake lever will return it to its disengaged position. Release the brake pedal slowly.

Starting and Stopping the Engine

Starting

1. Shift into neutral (N) and move the deck engagement lever (PTO) to Disengage. Lock the parking brake.

Note: An interlock switch on the transmission and PTO prevents the engine from starting unless the operator is sitting on the seat, the gear shift is in neutral, and the PTO lever is in the disengaged position.

2. Move the throttle control to the Choke position (Fig. 7) when starting a cold engine. When starting a hot engine, move the throttle control to the Fast position.
3. Rotate the ignition key (Fig. 7) to Start. When the engine starts, release the key and move the throttle between the Fast and Slow positions if the choke was used for starting. Operate the tractor with the throttle control in the Fast (full throttle) position for best performance.
4. Select the desired height-of-cut and move the PTO lever to Engage. Release parking brake, depress the clutch pedal, and shift into gear.
5. Release the clutch pedal slowly and smoothly.

Stopping

1. Depress the clutch and brake pedals, move the throttle control lever to Slow, and move the PTO lever to Disengage.
2. Shift the transaxle to neutral and engage the parking brake. Rotate the ignition key to Off.
3. Remove the key from the ignition switch. Wait for all moving parts to stop before getting off of the seat.

Break-In

The engine requires no special break-in other than changing the oil after the first five hours of operation. Operate the transaxle in all gears to ensure that the drive system is functioning correctly. After the first five hours of operation, check the condition of the belts.

Adjusting the Height-of-Cut

The height-of-cut may be set in one of five positions from approximately 1-1/2 to 3-1/2 inches (38 to 89 mm).

1. Ensure the PTO lever is in the Disengage position.
2. Move the height-of-cut control lever into the desired setting.
3. To engage the blade for cutting, move the PTO lever to Engage.

Operating Procedure

1. Move the PTO lever to Disengage.
2. Start the engine; refer to Starting and Stopping the Engine, page 16.

Important When the tractor is used for the first time, operate the transaxle in all gears to ensure that the drive system is functioning correctly, and become familiar with the controls and operating characteristics. Never shift while the machine is moving or without first depressing the clutch pedal; transaxle damage could result.

3. Depress the clutch pedal and shift the transaxle into the selected gear. Release the pedal slowly until the traction drive engages.

Important To avoid a jerky start and putting a heavy load on the transaxle, release the clutch pedal slowly. If shifting into reverse gear is difficult, jog the clutch pedal in and out to get the gears to mesh. Do not force the gear shift because damage may result. Should you encounter a jerking or grabbing condition during operation, contact your local Authorized Service Dealer for assistance.

4. To engage the blade for cutting, move the height-of-cut control to the desired setting. Place the throttle in the Operate position. Then move PTO lever to the Engage position.
5. To stop the engine, depress the clutch and brake pedals and move the throttle control to Slow. Move the PTO lever to Disengage, the gear shift into neutral, engage the parking brake, and rotate the ignition key to Off to stop the engine.

The Safety Interlock System

Caution

If safety interlock switches are disconnected or damaged the machine could operate unexpectedly causing personal injury.

- **Do not tamper with the interlock switches.**
- **Check the operation of the interlock switches daily and replace any damaged switches before operating the machine.**
- **Replace switches every two years regardless of whether they are operating properly or not.**

Understanding the Safety Interlock System

The safety interlock system is designed to prevent the engine from starting unless:

- The power take off (PTO) is Off.
- The gear shift lever is in neutral (N).

The safety system is designed to stop the engine if:

- You rise from the seat when the clutch/brake pedal is released.
- You rise from the seat when the PTO lever is Engaged.
- You shift into reverse with the PTO lever engaged and the operating-in-reverse interlock not deactivated.

Setting the KeyChoice™ Switch to Operate in Reverse

An interlock feature on the tractor prevents the power take off (PTO) from operating when backing up. If you shift into reverse with the PTO engaged (i.e., with mower blades or other attachment running), the engine will stop. **Do not mow in reverse unless absolutely necessary.**

If you need to use the PTO while backing up, you can turn off this interlock feature using the KeyChoice switch located near the seat bracket (Fig. 9).

Danger

You could back over a child or bystander while the mower blade(s) or other attachment is engaged and cause serious injury or death.

- **Do not mow in reverse unless absolutely necessary.**
- **Do not insert the KeyChoice key unless it is absolutely necessary.**
- **Always look backward and down before backing up.**
- **Use the KeyChoice switch only if you are certain no children or other bystanders will enter the mowing area.**
- **Be very observant after deactivating the interlock because the sound of the engine may prevent you from noticing that a child or bystander has entered the work area.**
- **Always remove both the ignition and KeyChoice keys and put them in a safe place out of the reach of children or unauthorized users when leaving the unit unattended.**

1. Engage the PTO.
2. Insert the KeyChoice key into the switch (Fig. 9).

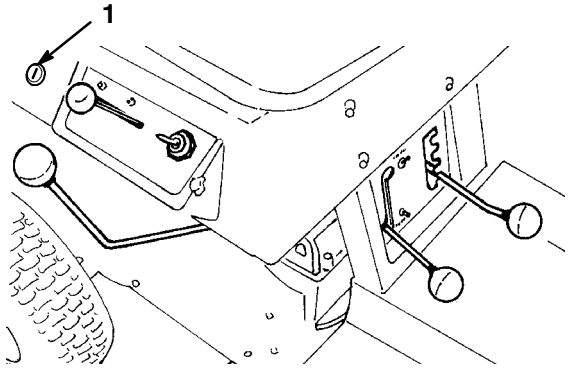

Figure 9

1. KeyChoice switch

3. Turn the KeyChoice key.

A red light on the front console (Fig. 10) turns on, indicating that the interlock is disabled.

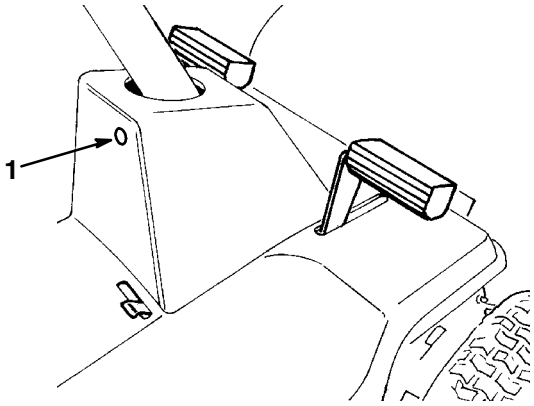

Figure 10

1. Operating-in-reverse light

Testing the Safety Interlock System

Test the safety interlock system before you use the machine each time. If the safety system does not operate as described below, have an Authorized Service Dealer repair the safety system immediately.

1. Move the gear shift into neutral.
2. Move the PTO lever to Engage. Sit on the seat and rotate ignition key to Start. The engine should not crank. If it does, the interlock system is malfunctioning and it must be repaired by an Authorized Service Dealer. If the engine does not crank, proceed to step 3.
3. Move the PTO lever to Disengage. Sit on the seat, depress the brake and clutch pedals, engage the parking brake, and shift into gear. Rotate the ignition key to Start. The engine should not crank. If it does, the interlock system is malfunctioning and must be repaired by an Authorized Service Dealer. If the engine does not crank, proceed to step 4.
4. Sit on the seat, move the gear shift into neutral, and the PTO lever to Disengage. Ensure that the parking brake is engaged. Rotate the ignition key to Start. The engine should start and continue to run. Then engage the PTO lever and carefully rise from the seat; the engine should stop. If the engine does not stop running, shut the engine off and have the interlock system repaired by an Authorized Service Dealer. If the engine shuts off when you rise from the seat, the interlock system is functioning correctly and the tractor can be operated safely.
5. Put the PTO lever in the Disengage position and the gear shifter in neutral. Start the engine. While the engine is running, move the PTO lever to the Engage position, push in the clutch, and put the gear shifter in reverse. The engine should stop.

6. Put the PTO lever in the Disengage position and the gear shifter in neutral. Start the engine. Move the PTO lever to the Engage position and turn the KeyChoice key and release it. The KeyChoice warning light should illuminate. Move the PTO lever to the Disengage position and the KeyChoice warning light should turn off.

Driving Forward or Backward

The throttle control regulates the engine speed as measured in rpm (revolutions per minute). Place the throttle control in the Fast position for best performance while mowing.

To go forward, push the clutch in and place the gear shifter in a forward gear, release the parking brake, and slowly release the clutch. To go in reverse, push the clutch in to stop, and after stopping completely, place the gear shifter in reverse. Slowly release the clutch.

Note: For reverse motion, with the PTO engaged, the operating-in-reverse feature must be deactivated by the KeyChoice switch located on the right-hand side panel just below and to the rear of the seat.

Stopping the Machine

To stop the machine, push the clutch in and shift to neutral (N). Disengage the PTO, and turn the ignition key to Off to stop the engine. Also set the parking brake if you leave the machine unattended; refer to Setting the Parking Brake, page 16. Remember to remove the keys from the ignition and KeyChoice switches.

Caution

Children or bystanders may be injured if they move or attempt to operate the tractor while it is unattended.

Always remove the ignition and KeyChoice keys and set the parking brake when leaving the machine unattended, even if it is just for a few minutes.

Important To prevent brake wear, do not "Ride the Brakes." Shift to a lower speed for slower ground speed. Choose a slow speed so that you will not have to stop or shift while on the slope.

Positioning the Seat

The seat can move forward and backward. Position the seat where you have the best control of the machine and are most comfortable.

1. Raise the seat and loosen the locknuts (Fig. 11).
2. Slide the seat to the desired position and tighten the lock nuts.

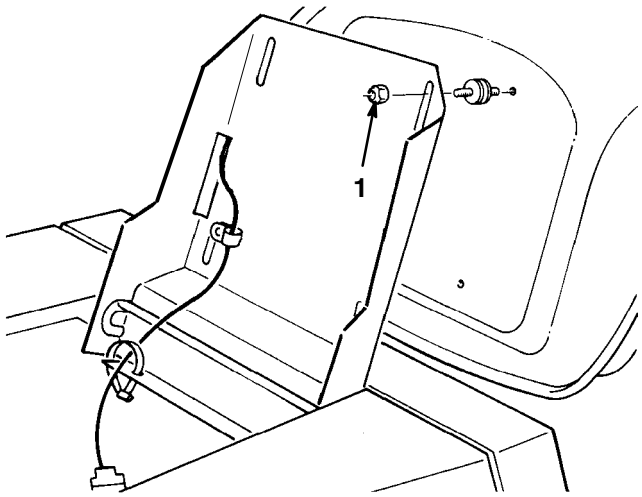

Figure 11

1. Locknuts

Side Discharge

The mower has a hinged grass deflector that disperses clippings to the side and down toward the turf.

Danger

Without the grass deflector, discharge cover, or complete grass catcher assembly mounted in place, you and others are exposed to blade contact and thrown debris. Contact with the rotating mower blade(s) and thrown debris will cause injury or death.

- **Never remove the grass deflector from the mower because the grass deflector routes material down toward the turf. If the grass deflector is ever damaged, replace it immediately.**
- **Never put your hands or feet under the mower.**
- **Never try to clear the discharge area or mower blades unless you move the power take off (PTO) to Off and rotate the ignition key to Off. Also remove the key and pull the wire off of the spark plug(s).**

Tips for Mowing Grass

Fast Throttle Setting

For best mowing and maximum air circulation, operate the engine at Fast. Air is required to thoroughly cut grass clippings, so do not set the height-of-cut so low as to totally surround the mower by uncut grass. Always try to have one side of the mower free from uncut grass, which allows air to be drawn into the mower.

Using the Mower for the First Time

Cut grass slightly longer than normal to ensure the cutting height of the mower does not scalp any uneven ground. However, the cutting height used in the past is generally the best one to use. When cutting grass longer than six inches (15.2 cm) tall, you may want to cut the lawn twice to ensure an acceptable quality of cut.

Cut 1/3 of the Grass Blade

It is best to cut only about 1/3 of the grass blade. Cutting more than that is not recommended, unless grass is sparse or it is late fall when grass grows more slowly.

Mowing Direction

Alternate mowing direction to keep the grass standing straight. This also helps disperse clippings which enhances decomposition and fertilization.

Mow at Correct Intervals

Normally, mow every four days. But remember, grass grows at different rates at different times. So to maintain the same cutting height, which is a good practice, mow more often in early spring. As the grass growth rate slows in mid summer, mow less frequently. If you cannot mow for an extended period, first mow at a high cutting height; then mow again two days later at a lower height setting.

Ground Speed

To improve cut quality, use a slower ground speed.

Avoid Cutting Too Low

If the cutting width of the mower is wider than the mower you previously used, raise the cutting height one notch to ensure that uneven turf is not cut too short.

Long Grass

If the grass is ever allowed to grow slightly longer than normal, or if it contains a high degree of moisture, raise the cutting height higher than usual and cut the grass at this setting. Then cut the grass again using the lower, normal setting.

When Stopping

If the machine must be stopped while mowing, a clump of grass clippings may drop onto your lawn. To avoid this:

1. With the blade(s) engaged, move onto a previously cut area.
2. To disperse the clippings evenly, raise the mower one or two height-of-cut settings while driving forward with the blade(s) engaged.

Keep the Underside of the Mower Clean

Use the washout port to clean clippings and dirt from the underside of the mower after each use. If grass and dirt build up inside the mower, cutting quality will eventually become unsatisfactory.

Blade Maintenance

Maintain a sharp blade throughout the cutting season because a sharp blade cuts cleanly without tearing or shredding the grass blades. Tearing and shredding turns grass brown at the edges, which slows growth and increases the chance of disease. Every 30 days, check the cutter blade(s) for sharpness and file down any nicks.

Tips For Cutting Leaves

In the fall, you can cut your leaves up into finely cut particles and inject the particles down into the grass. When spring arrives, the leaf particles will have decomposed and restored valuable nutrients to the soil.

- When cutting is complete, always be sure that 50% of the lawn shows through the finely cut leaf cover. This may require one or more passes over the leaves.
- If there are more than five inches of leaves on the lawn, raise the deck one or two notches higher. This makes it easier to feed leaves under the mower deck.
- If leaves are not cut up finely enough to be hidden down in the grass, make a second pass 90 degrees to the first pass.
- If you cut up a lot of oak leaves, you might want to add lime to your grass in the spring. Lime reduces the acidity of oak leaves.

Maintenance

Note: Determine the left and right sides of the machine from the normal operating position.

Recommended Maintenance Schedule

Maintenance Service Interval	Maintenance Procedure
After first use	• Change the oil. • Check the drive chain.
Each use	• Check the oil. • Check the system interlock. • Check the cutting blades. • Check the brake. • Wash the underside of the mower. • Clean the outside of the engine.
Every 25 hours	• Grease the front axle spindles.[2] • Lubricate pivot points.[2] • Service the air cleaner pre-cleaner.[2] • Check the spark plug.[2] • Check the tire pressure. • Check the drive chain.
Every 50 hours	• Change the oil.[1]
Every 100 hours	• Service the paper air cleaner.[2] • Replace the spark plug.
Before storage	• Perform all of the maintenance procedures listed above. • Check the blade drive belt. • Check the traction drive belt. • Drain the gasoline. • Paint chipped surfaces.
After storage	• Check the system interlock. • Check the brake. • Check the spark plug.
Every 2 years	• Replace the interlock switches.

[1]Change the oil every 25 hours when operating the engine under heavy load or in high temperatures.

[2]Clean more often under dusty, dirty conditions.

Important Refer to your engine operator's manual for additional maintenance procedures.

Caution

If you leave the key in the ignition switch, someone could accidently start the engine and seriously injure you or other bystanders.

Remove the key from the ignition and disconnect the wire from the spark plug before you do any maintenance. Set the wire aside so that it does not accidentally contact the spark plug.

Engine Oil

Service Interval/Specification

Change the oil:

- After the first 5 operating hours
- After every 50 operating hours

Note: Change the oil more frequently when operating conditions are extremely dusty or sandy.

Oil Type: Detergent oil (API service SF, SG, SH, SJ, or higher)

Crankcase Capacity: 36 oz. (1.06 l)

Viscosity: See the table below.

USE THESE SAE VISCOSITY OILS

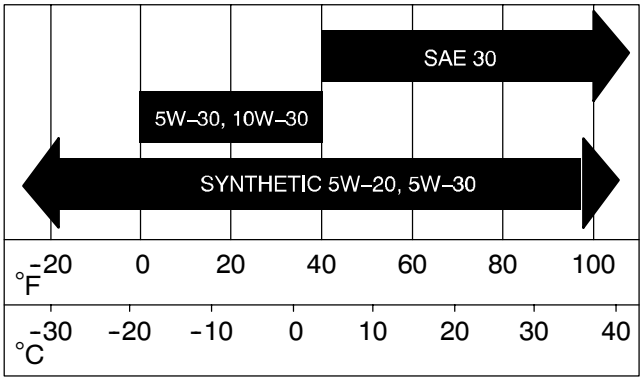

Checking the Oil Level

1. Park the machine on a level surface, disengage the PTO, set the parking brake, stop the engine, and remove the ignition key.
2. Clean around the oil dipstick (Fig. 12) so dirt cannot fall into the filler hole and damage the engine.

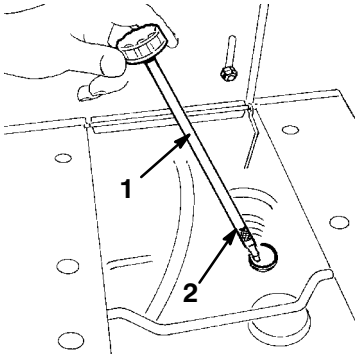

Figure 12

1. Oil dipstick
2. Full mark

3. Unscrew the oil dipstick and wipe the metal end clean (Fig. 12).
4. Screw the dipstick fully into the filler neck. Remove it and check the oil level on the dipstick. If the level is low, add only enough oil to raise the level to the Full mark.

Important Do not overfill the crankcase with oil because the engine may be damaged.

Changing and Draining the Oil

1. Start the engine and let it run for five minutes. This warms the oil so that it drains better.
2. Park the machine so that the drain side is slightly lower than the opposite side to ensure that the oil drains completely. Then disengage the PTO, set the parking brake, stop the engine, and remove the ignition key.
3. Set the height-of-cut in the lowest position.
4. Place a drain pan below the drain plug (Fig. 13). Remove the drain plug. Allow all of the oil to flow into the drain pan. When the oil has drained completely, install the drain plug.

Note: Dispose of the used oil at a certified recycling center.

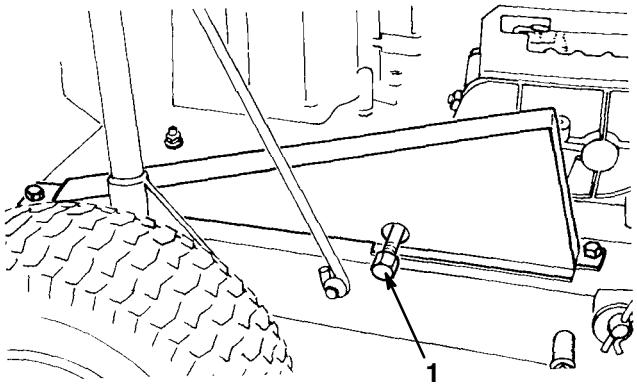

Figure 13

1. Drain plug

5. Unscrew the dipstick and slowly pour 80% of the specified amount of oil into the filler hole (Fig. 12). Check the oil level; refer to Checking the Oil Level, page 22, steps 3-4.

Cleaning the Cooling System

Clean the cooling system before each use. Remove the buildup of grass, dirt, or other debris from the cylinder and cylinder head cooling fins, the air intake screen on the flywheel end, the carburetor lever, the governor lever, and linkages. This will help ensure adequate cooling and correct engine speed and reduce the possibility of overheating and mechanical damage.

Brake

Always set the parking brake when you stop the machine or leave it unattended. If the parking brake does not hold securely, an adjustment is required.

Checking the Brake

1. Park the machine on a level surface, disengage the PTO, set the parking brake, stop the engine, and remove the ignition key.
2. The rear wheels must lock and skid when you try to push the tractor forward. An adjustment is required if the wheels turn and do not lock; refer to Adjusting the Brake, page 23.
3. Release the brake and push the tractor forward. The wheels should rotate freely.
4. If both conditions are met no adjustment is required.

Adjusting the Brake

Adjust the brake pucks if the parking brake does not hold or braking power is not sufficient when the brake pedal is depressed. The brake is located on the left side of the transaxle (Fig. 14).

1. Shut the engine off and remove the ignition key. Pull the wire off of the spark plug.
2. Remove the battery from the tractor; refer to Removing the Battery, page 26.
3. Tighten the locknut approximately 1/4 turn clockwise (Fig. 14).

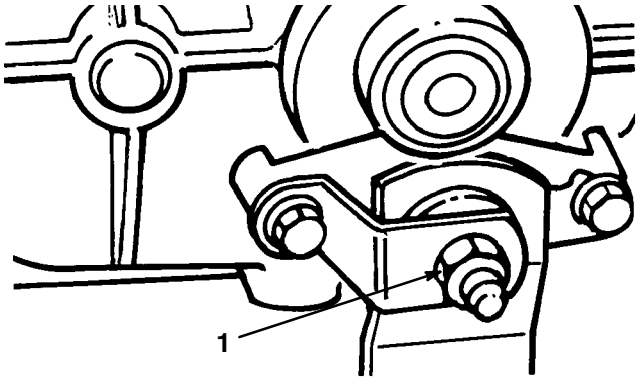

Figure 14

1. Locknut

4. Check the operation of the brake by pushing the tractor; no brake drag should be evident. If drag is evident, rotate the locknut an additional 1/8 turn counterclockwise or until there is no drag.

Important With the parking brake released, the rear wheels must rotate freely when you push the tractor. If brake action and free wheel rotation cannot be achieved, contact your service dealer immediately.

Greasing and Lubrication

Service Interval/Specification

Grease the machine after every 25 operating hours or yearly, whichever occurs first. Grease more frequently when operating conditions are extremely dusty or sandy.

Grease Type: General-purpose grease.

How to Grease

1. Disengage the PTO, set the parking brake, stop the engine, and remove the ignition key.
2. Clean the grease fittings with a rag. Make sure to scrape any paint off of the front of the fitting(s).
3. Connect a grease gun to the fitting. Pump grease into the fittings.
4. Wipe up any excess grease.

Where to Add Grease

1. Lubricate the front wheels and spindles until grease begins to ooze out of the bearings (Fig. 15).

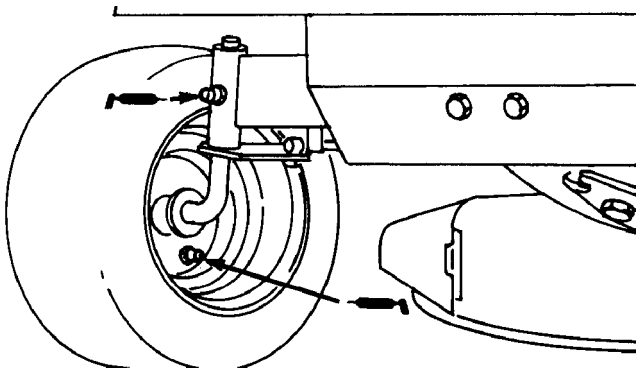

Figure 15

2. The rear wheels should be removed and the axles greased once a year to prevent the formation of rust and to simplify future wheel removal.

Lubricate Pivot Points

The mechanical pivot points on the tractor must be oiled after every 25 hours of operation; lubricate more frequently when conditions are dusty or sandy.

Important To lubricate all of the mechanical pivot points, the tractor must be tipped on its rear end. However, before the rider is tipped, drain all gasoline from the fuel tank and oil from the crankcase. Also remove the battery so acid does not spill on the tractor.

1. Remove the mower housing from the tractor; refer to Removing and Installing the Cutting Unit, page 29, steps 1-10.
2. Lubricate all mechanical pivot points on the tractor and mower housing with light oil.
3. Install the mower housing onto the tractor; refer to Removing and Installing the Cutting Unit, page 29, steps 11-16.

Air Cleaner

Service Interval/Specification

Foam Element: Clean and oil after every 25 operating hours, or yearly, whichever occurs first.

Paper Element: Replace every 100 operating hours or yearly, whichever occurs first.

Note: Service the air cleaner more frequently (every few hours) if operating conditions are extremely dusty or sandy.

1. Remove the wire from the spark plug.
2. Remove the knob and remove the air cleaner cover (Fig. 16).

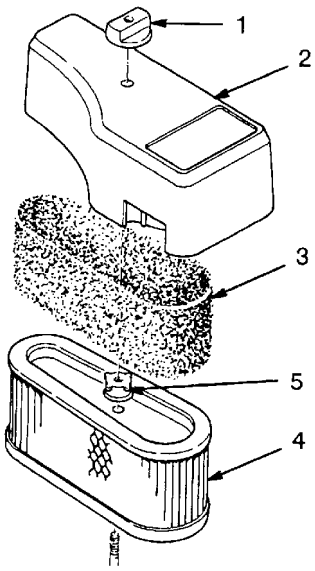

Figure 16

1. Knob
2. Air cleaner cover
3. Foam pre-cleaner
4. Paper element
5. Nut

3. Carefully slide the foam element off of the paper element (Fig. 16).
4. Unscrew the nut and remove the paper element (Fig. 16).

Cleaning the Foam and Paper Elements

1. Foam element:
   A. Wash the foam element in liquid soap and warm water. When the element is clean, rinse thoroughly.
   B. Dry the element by squeezing it in a clean cloth.
   C. Saturate the element in engine oil. Squeeze it in a clean cloth to remove excess oil.

Important Replace the foam element if it is torn or worn.

2. Paper element:
   A. Lightly tap the element on a flat surface to remove dust and dirt.
   B. Inspect the element for tears, an oily film and damage to the rubber seal.

Important Never clean the paper element with pressurized air or liquids, such as solvent, gas, or kerosene. Replace the paper element if it is damaged or cannot be cleaned thoroughly.

Installing the Foam and Paper Elements

Important To prevent engine damage, always operate the engine with the complete foam and paper air cleaner assembly installed.

1. Clean the air cleaner base carefully to prevent dirt from entering the carburetor.
2. Carefully slide the foam element onto the paper air cleaner element (Fig. 16).
3. Slide the air cleaner assembly onto the long rod. Tighten the nut securely (Fig. 16).

Note: Make sure the rubber seal is flat against the air cleaner base.

4. Install the air cleaner cover and knob (Fig. 16). Tighten the knob securely.

Spark Plug

Service Interval/Specification

Install a new spark plug after every 100 operating hours. Check the spark plug after every 25 operating hours. Make sure the air gap between the center and side electrodes is correct before installing the spark plug. Use a spark plug wrench for removing and installing the spark plug and a gapping tool/feeler gauge to check and adjust the air gap.

Type: Champion RJ-19LM

Air gap: 0.030 in. (0.76 mm)

Removing the Spark Plug(s)

1. Disengage the PTO, set the parking brake, stop the engine, and remove the ignition key.
2. Pull the wire off of the spark plug (Fig. 17). Clean around the spark plug to prevent dirt from falling into the engine and potentially causing damage.
3. Remove the spark plug(s).

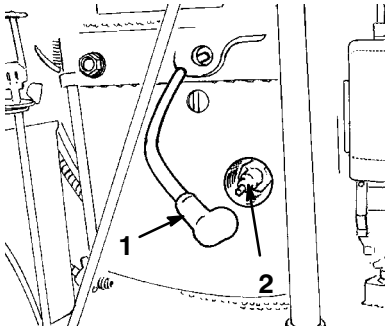

Figure 17

1. Spark plug wire
2. Spark plug

Checking the Spark Plug

1. Look at the center of the spark plug(s) (Fig. 18). If you see light brown or gray on the insulator, the engine is operating properly. A black coating on the insulator usually means the air cleaner is dirty.

Important Never clean the spark plug(s). Always replace the spark plug(s) when it has a black coating, worn electrodes, an oily film, or cracks.

2. Check the gap between the center and side electrodes (Fig. 18). Bend the side electrode (Fig. 18) if the gap is not correct.

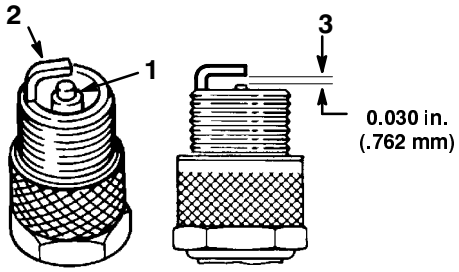

Figure 18

1. Center electrode insulator
2. Side electrode
3. Air gap (not to scale)

Installing the Spark Plug(s)

1. Install the spark plug(s). Make sure the air gap is set correctly.
2. Tighten the spark plug(s) to 15 ft.-lb. (20.4 N·m).
3. Push the wire(s) onto the spark plug(s) (Fig. 17).

Tire Pressure

Maintain the air pressure in the front and rear tires at 20 psi (138 kPa). Check the pressure at the valve stem after every 25 operating hours or monthly, whichever occurs first (Fig. 19). Check the tires when they are cold to get the most accurate pressure reading.

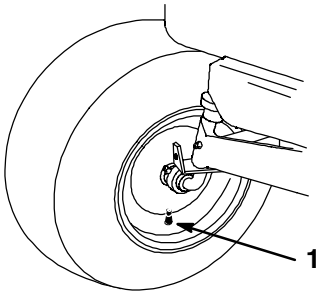

2323

Figure 19

1. Valve stem

Draining the Fuel Tank

Danger

In certain conditions, gasoline is extremely flammable and highly explosive. A fire or explosion from gasoline can burn you and others and can damage property.

- **Drain gasoline from the fuel tank when the engine is cold. Do this outdoors in an open area. Wipe up any gasoline that spills.**
- **Never smoke when draining gasoline, and stay away from an open flame or where a spark may ignite the gasoline fumes.**

1. Clean the area around the fuel tank cap so foreign matter cannot enter the filler hole when the cap is removed. Remove the cap from the fuel tank.
2. Using a pump-type syphon, drain the gasoline into a clean gas can.

Note: There is no other recommended way to drain gasoline from the fuel tank, other than by using a pump-type syphon. An inexpensive syphon can be purchased at a hardware store.

Battery

Warning

Battery posts, terminals, and related accessories contain lead and lead compounds, chemicals known to the State of California to cause cancer and reproductive harm. *Wash hands after handling*.

Service Interval/Specification

Always keep the battery clean and fully charged. Use a paper towel to clean the battery case. If the battery terminals are corroded, clean them with a solution of four parts water and one part baking soda. Apply a light coating of grease to the battery terminals to prevent corrosion.

Voltage: 12 v, 160 Cold Cranking Amps

Removing the Battery

Warning

Battery terminals or metal tools could short against metal tractor components causing sparks. Sparks can cause the battery gasses to explode, resulting in personal injury.

- **When removing or installing the battery, do not allow the battery terminals to touch any metal parts of the tractor.**
- **Do not allow metal tools to short between the battery terminals and metal parts of the tractor.**

1. Disengage the PTO, set the parking brake, stop the engine, and remove the ignition key.
2. Tip the seat forward to see the battery.
3. Disconnect the negative (black) ground cable from the battery post (Fig. 20).

Warning

Incorrect battery cable routing could damage the tractor and cables causing sparks. Sparks can cause the battery gasses to explode, resulting in personal injury.

- **Always *disconnect* the negative (black) battery cable before disconnecting the positive (red) cable.**
- **Always *connect* the positive (red) battery cable before connecting the negative (black) cable.**

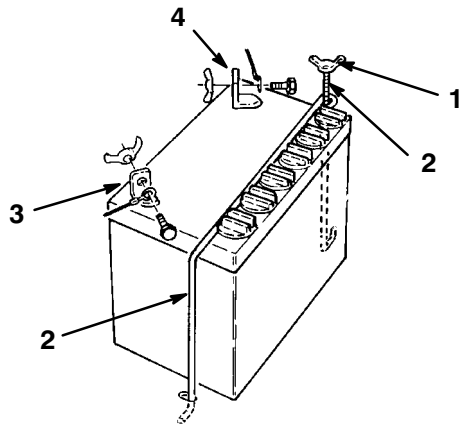

Figure 20

1. Wing nut
2. Battery hold-down
3. Negative (–) post
4. Positive (+) post

4. Slide the rubber cover up the positive (red) cable. Disconnect the positive (red) cable from the battery post (Fig. 20).
5. Remove the wing nut securing the battery hold-downs to tractor chassis (Fig. 20).
6. Lift up on the top battery hold-down and pivot it rearward.
7. Remove the battery from the chassis.

Installing the Battery

1. Install the battery with the terminal posts toward the inside of the machine.
2. Secure the battery in the chassis with the hold-down rods.
3. Using the bolt and wing nut, connect the positive (red) cable to the positive (+) battery post (Fig. 20). Slide the rubber cover over the battery post.
4. Using the bolt and wing nut, connect the negative (black) cable to the negative (-) battery post (Fig. 20).

Checking the Electrolyte Level

Danger

Battery electrolyte contains sulfuric acid which is a deadly poison and causes severe burns.

- **Do not drink electrolyte and avoid contact with skin, eyes or clothing. Wear safety glasses to shield your eyes and rubber gloves to protect your hands.**
- **Fill the battery where clean water is always available for flushing the skin.**

1. With the engine off, tip the seat forward to see the battery.
2. Look at the side of the battery. The electrolyte must be up to the Upper line (Fig. 21). Do not allow the electrolyte to fall below the Lower line (Fig. 21).

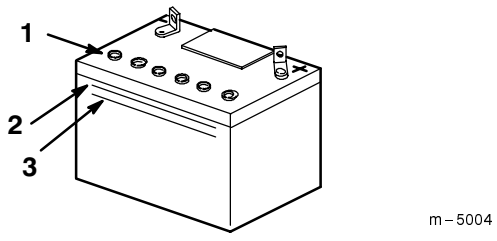

Figure 21

1. Vent caps
2. Upper line
3. Lower line

3. If the electrolyte is low, add the required amount of distilled water; refer to Adding Water to the Battery, page 27.

Adding Water to the Battery

The best time to add distilled water to the battery is just before you operate the machine. This lets the water mix thoroughly with the electrolyte solution.

1. Remove the battery from the tractor; refer to Removing the Battery, page 26.
2. Clean the top of the battery with a paper towel.

Important Never fill the battery with distilled water while the battery installed in the tractor. Electrolyte could be spilled on other parts and cause corrosion.

3. Remove the vent caps from the battery (Fig. 21).
4. Slowly pour distilled water into each battery cell until the electrolyte level is up to the Upper line (Fig. 21) on the battery case.

Important Do not overfill the battery because electrolyte (sulfuric acid) can cause severe corrosion and damage to the chassis.

5. Wait five to ten minutes after filling the battery cells. Add distilled water, if necessary, until the electrolyte level is up to the Upper line (Fig. 21) on the battery case.
6. Reinstall the battery vent caps.

Charging the Battery

Warning

Charging the battery produces gasses that can explode.

Never smoke near the battery and keep sparks and flames away from battery.

Important Always keep the battery fully charged (1.260 specific gravity). This is especially important to prevent battery damage when the temperature is below 32°F (0°C).

1. Remove the battery from the chassis; refer to Removing the Battery, page 26.
2. Check the electrolyte level; refer to Checking Electrolyte Level, page 27.
3. Make sure the vent caps are installed in the battery. Charge the battery for 1 hour at 25 to 30 amps or 6 hours at 4 to 6 amps. Do not overcharge the battery.

4. When the battery is fully charged, unplug the charger from the electrical outlet, then disconnect the charger leads from the battery posts (Fig. 22).

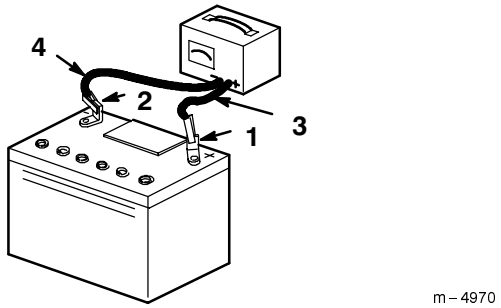

Figure 22

1. Positive battery post
2. Negative battery post
3. Red (+) charger lead
4. Black (-) charger lead

5. Install the battery in the chassis; refer to Installing the Battery, page 27.

Note: Do not run the tractor with the battery disconnected because electrical damage may occur.

Servicing the Cutting Blade

Danger

A worn or damaged blade can break, and a piece of the blade could be thrown into the operator's or bystander's area, resulting in serious personal injury or death.

- **Inspect the blade periodically for wear or damage.**
- **Replace a worn or damaged blade.**

Removing the Blade

1. Stop the engine and remove the ignition key. Pull the wire off of the spark plug.

Important To remove the blade from the spindle shaft, the tractor must be tipped on its rear end. Before the tractor is tipped, drain all of the gasoline from the fuel tank and the oil from the crankcase. Also remove the battery so acid does not spill onto the tractor. Any bagging attachments must be removed also.

2. Drain the gasoline from the fuel tank: refer to Draining the Fuel Tank, page 26.

3. Drain the oil from the crankcase: refer to Changing and Draining the Oil, steps 1-4, page 22.

4. Remove the battery from the tractor; refer to Removing the Battery, page 26

5. Shift the transmission into first gear and engage the parking brake. Tip the tractor onto its rear end.

6. Grasp the end of the blade using a rag or thickly padded glove. Then remove the blade bolt, washer, and blade (Fig. 23). A block of wood may be wedged between the blade and mower to lock the blade when you are removing the bolt.

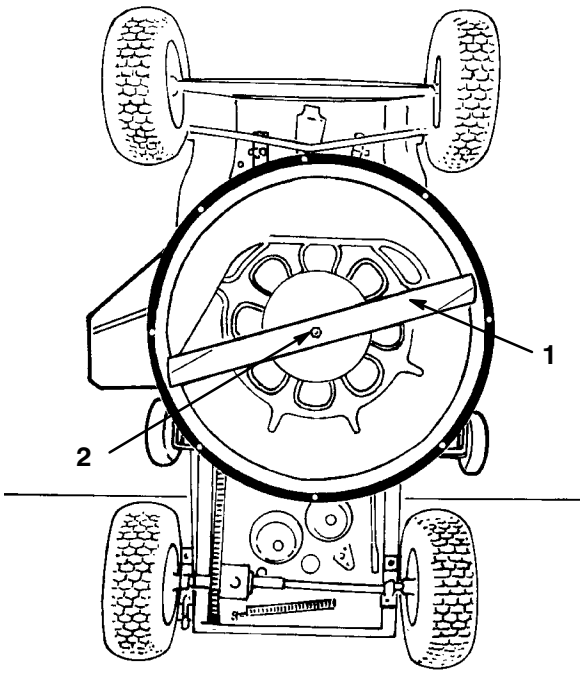

Figure 23

1. Blade
2. Bolt and washer

Sharpening the Blade

1. Using a file, sharpen the cutting edge at both ends of the blade (Fig. 24). Maintain the original angle. The blade retains its balance if the same amount of material is removed from both cutting edges.

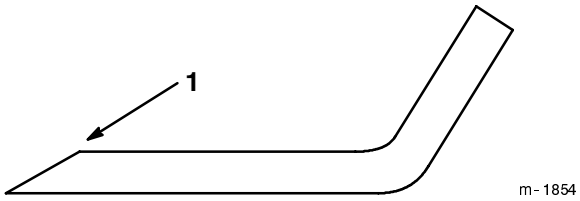

Figure 24

1. Sharpen at original angle

2. Check the balance of the blade by putting it on a blade balancer (Fig. 25). If the blade stays in a horizontal position, the blade is balanced and can be used. If the blade is not balanced, file some metal off of the back side of the blade. Repeat this procedure until the blade is balanced.

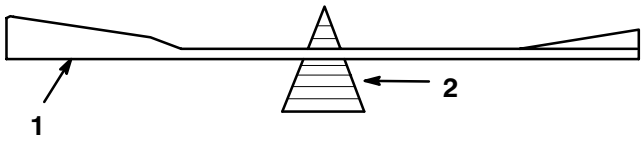

Figure 25

1. Blade
2. Balancer

Installing the Blade

1. Install the blade, washer, and blade bolt (Fig. 23).

Important The curved part of the blade must be pointing toward the inside of the mower to ensure proper cutting.

2. Tighten the blade bolt to 45-60 ft.-lb. (61-81 N·m).

Important Make sure the cutting edge of the blade is away from the mower housing.

3. Tip the tractor back to its normal operating position.
4. Fill the crankcase with oil; refer to Filling the Crankcase with Oil, page 15
5. Fill the fuel tank with gasoline; refer to Filling the Fuel Tank, page 12.
6. Install the battery; refer to Installing the Battery, page 27

Removing and Installing the Cutting Unit

1. Stop the engine and remove the ignition key. Pull the wire off of the spark plug.
2. Shift the transmission into first gear and engage the parking brake.
3. Move the height-of-cut control to the lowest position.

Important To remove the mower housing from the tractor, the tractor must be tipped on its rear end. Before the tractor is tipped, drain all of the gasoline from the fuel tank and the oil from the crankcase. Also remove the battery so acid does not spill onto the tractor.

4. Drain the gasoline from the fuel tank; refer to Draining the Fuel Tank, page 26.
5. Drain the oil from the crankcase; refer to Changing and Draining the Oil, steps 1-4, page 22.
6. Remove the battery from the tractor; refer to Removing the Battery, page 26.
7. Tip the tractor onto its rear end.
8. Remove the blade drive belt; refer to Replacing the Blade Drive Belt, page 30.
9. Remove the cotter pin and clevis pin securing the deck brake rod to the idler bracket (Fig. 26).

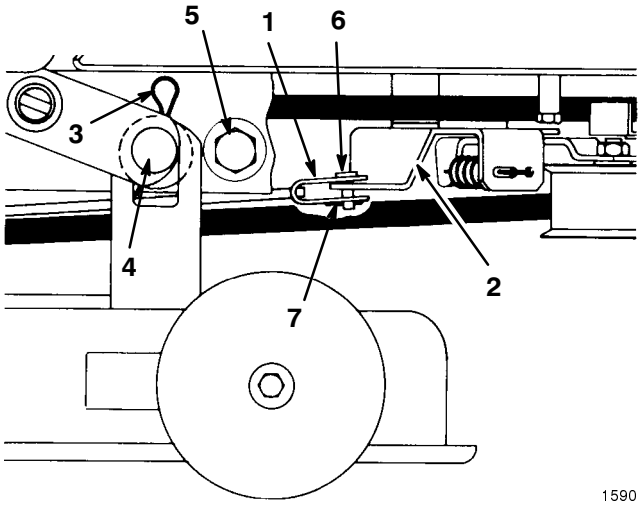

Figure 26

1. Brake rod
2. Idler bracket
3. Hairpin
4. Mounting pin
5. Deck stops
6. Clevis pin
7. Cotter pin

10. Remove the two hairpin cotters and washers retaining the mower housing to the mounting pins (Fig. 26). Grasp the mower housing and move it to the side until the housing slides off of the pins, then forward to allow the front mounts to drop.
11. To install the mower housing, reverse the removal procedure.
12. Install the blade drive belt; refer to Replacing the Blade Drive Belt, page 30.
13. Tip the tractor back to its normal operating position.
14. Fill the crankcase with oil; refer to Filling the Crankcase with Oil, page 15.
15. Fill the fuel tank with gasoline; refer to Filling the Fuel Tank, page 12
16. Install the battery; refer to Installing the Battery, page 27.

Replacing the Blade Drive Belt

Important To replace the blade drive belt, the tractor must be tipped on its rear end. Before the tractor is tipped, drain all of the gasoline from the fuel tank and the oil from the crankcase. Also remove the battery so acid does not spill onto the tractor.

1. Drain the gasoline from the fuel tank; refer to Draining the Fuel Tank, page 26.

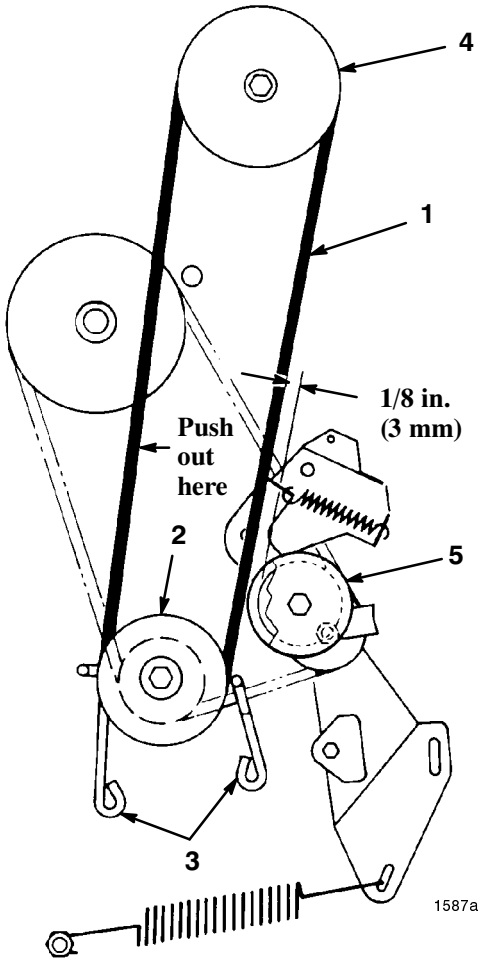

Figure 27

1. Blade drive belt
2. Engine pulley
3. Engine pulley belt guides
4. Mower housing pulley
5. Idler pulley

2. Drain the oil from the crankcase; refer to Changing and Draining the Oil, steps 1–4, page 22.
3. Remove the battery from the tractor; refer to Removing the Battery, page 26.
4. Shift the transmission into first gear and engage the parking brake. Tip the tractor onto its rear end.
5. Remove the screws, retainers, and locknuts securing the deck stops to each side of the mower frame (Fig. 26). Slide the mower housing rearward to release the belt tension.
6. Move the height-of-cut control to the lowest position.
7. Loosen the screws securing the two engine pulley belt guides and move the guides away from the pulley. Remove the deck drive belt from the engine pulley (Fig. 27).
8. Move the PTO lever to Engage so that the brake is away from the mower housing pulley.
9. Remove the two screws securing the belt guide to the mower housing and remove the belt guide. Remove the belt from the pulley.
10. Make sure the PTO lever is in Engage so that the brake is away from the mower housing pulley and install the new belt around the pulley.
11. Route the belt around the engine pulley and install the belt guides. Make sure the belt guides are within 1/8 in. (3 mm) of the pulley or belt but not making contact.
12. Push out on the belt as shown in Figure 27, and check the clearance between the outside of the belt and the inside of the idler pulley (Fig. 27). The clearance should be approximately 1/8 in. (3 mm).
13. If the clearance between the belt and pulley is correct, proceed to step 16, otherwise proceed to the next step for the adjustment procedure.
14. Locate the PTO rod end on the left side of the transmission (Fig. 28). Remove the clevis pin retainer and rotate the clevis to lengthen or shorten the rod until the desired clearance between the belt and pulley is attained.

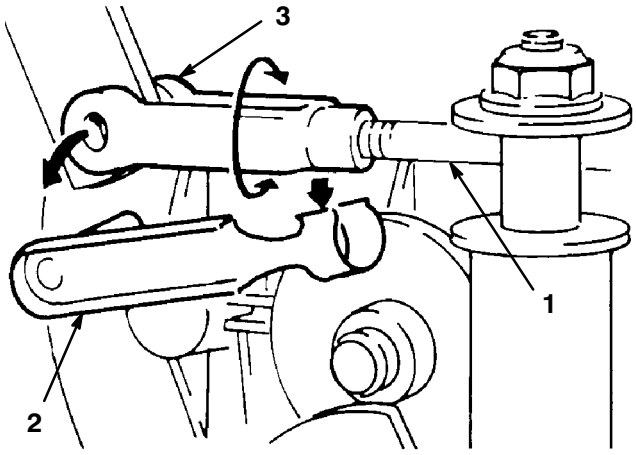

Figure 28

1. Deck engagement rod
2. Clevis pin retainer
3. Clevis

15. Reconnect the clevis and check the adjustment.

16. Tip the tractor back to its normal position.

17. Fill the crankcase with oil; refer to Filling the Crankcase with Oil, page 15.

18. Fill the fuel tank with gasoline; refer to Filling the Fuel Tank, page 12.

19. Install the battery; refer to Installing the Battery, page 27.

Replacing the Traction Drive Belt

Important To replace the traction drive belt, the tractor must be tipped on its rear end. Before the tractor is tipped, drain all of the gasoline from the fuel tank and the oil from the crankcase. Also remove the battery so acid does not spill onto the tractor.

1. Drain the gasoline from the fuel tank; refer to Draining the Fuel Tank, page 26.

2. Drain the oil from the crankcase; refer to Changing and Draining the Oil, steps 1-4, page 22.

3. Remove the battery from the tractor; refer to Removing the Battery, page 26.

4. Shift the transmission into first gear and engage the parking brake. Tip the tractor onto its rear end.

5. Remove the blade drive belt; refer to Replacing the Blade Drive Belt, page 30.

6. Remove the mower housing; refer to Installing and Removing the Cutting Unit, page 29.

7. Unhook the large traction spring from the mounting screw (Fig. 29). Use caution when removing the spring as it is heavily tensioned.

8. Unhook the idler spring from the idler bracket (Fig. 29).

9. Remove the locknut and washer securing the idler bracket to the frame and remove the bracket (Fig. 29).

10. Loosen the locknut on the pulley until the belt guide can be removed (Fig. 29). Remove the belt from all of the pulleys.

11. Reverse the procedure to install the belt.

Note: When installing the belt guide to the idler pulley, make sure the edge of the belt guide is parallel to the frame as shown in Figure 29.

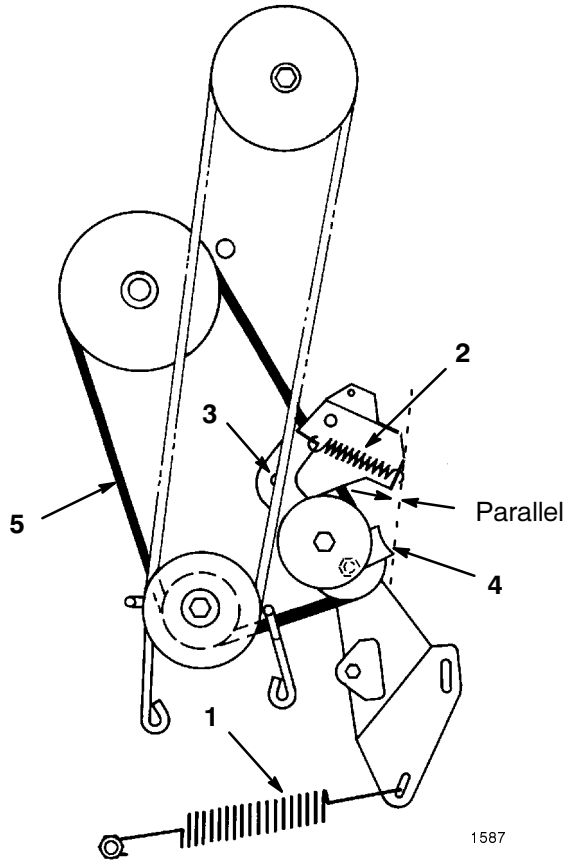

Figure 29

1. Traction spring
2. Idler spring
3. Locknut and washer securing idler bracket
4. Pulley belt guide
5. Traction drive belt

12. Install the mower housing; refer to Removing and Installing the Cutting Unit, page 29, steps 11-14.

13. Tip the tractor back to its normal operating position.

14. Fill the crankcase with oil; refer to Filling the Crankcase with Oil, page 15.

15. Fill the fuel tank with gasoline; refer to Filling the Fuel Tank, page 12.

16. Install the battery; refer to Installing the Battery, page 27.

Checking and Adjusting the Drive Chain

The drive chain must be adjusted to maintain 1/8 in. (3 mm) deflection at mid span between the transmission and differential sprockets. Check the chain deflection after the first 5 hours of operation and after every 25 hours of operation.

1. Remove the two screws securing the chain cover to the tractor chassis and remove the chain cover (Fig. 30).

Important If the chain is worn, loose, or adjusted incorrectly, the chain will make a popping sound as it moves over the sprockets. This indicates that the chain needs adjusting to prevent sprocket damage. If assistance is needed, contact your local Authorized Service Dealer.

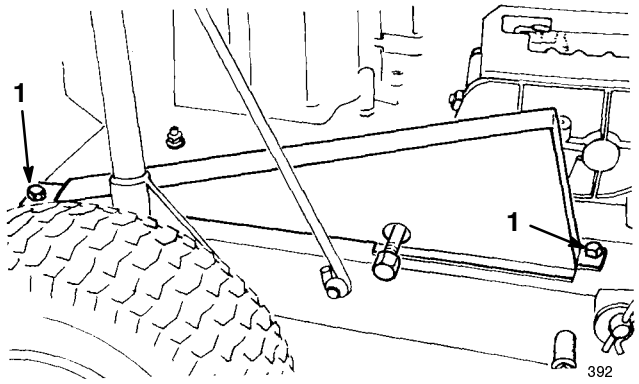

Figure 30

1. Screws

2. Check the deflection of the drive chain by lifting up and pressing down on the chain with moderate pressure at mid span (Fig. 31). There should be 1/8 in. (3 mm) total deflection (Fig. 32). If the deflection is not as specified, an adjustment is required; see steps 3-13.

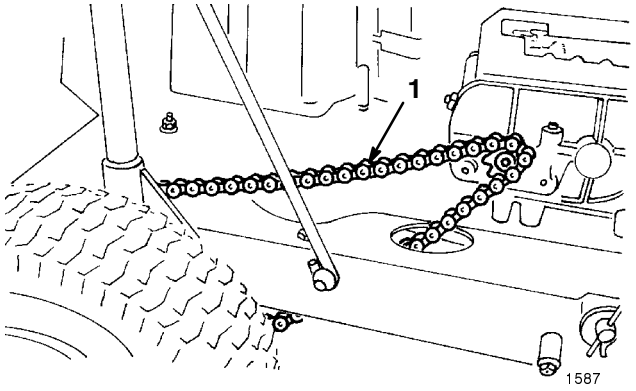

Figure 31

1. Drive chain

Important To adjust the drive chain, the tractor must be tipped on its rear end. Before the tractor is tipped, drain all of the gasoline from the fuel tank and the oil from the crankcase. Also remove the battery so acid does not spill onto the tractor. Any bagging attachments must be removed also.

3. Drain the gasoline from the fuel tank; refer to Draining the Fuel Tank, page 26.

4. Drain the oil from the crankcase; refer to Changing and Draining the Oil, page 22, steps 1-4.

5. Remove the battery from the tractor; refer to Removing the Battery, page 26.

6. Shift the transmission into first gear and engage the parking brake. Tip the tractor onto its rear end so that the chassis is on top of 2 in. x 4 in. wood blocks. The wheels must be off of the floor so that the axle can be moved.

7. Loosen the four locknuts securing the pillow blocks to the tractor frame (Fig. 32).

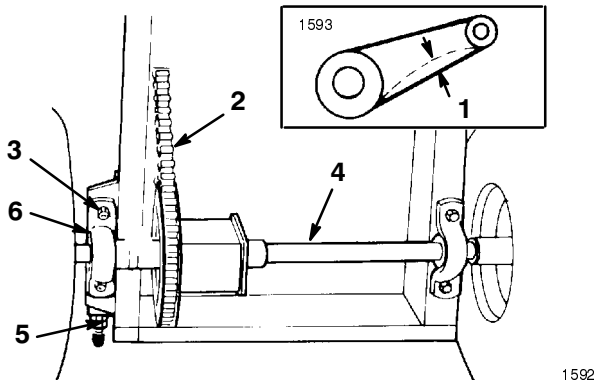

Figure 32

1. 1/8 in. (3 mm)
2. Drive chain
3. Locknut
4. Axle
5. Chain tensioner
6. Pillow block

8. Loosen the rear jam nut on the chain tensioner (Fig. 32).

9. Rotate the inside nut on the chain tensioner until the desired chain deflection is attained.

10. Tighten the flange nuts securing the right pillow block (chain side) to the tractor frame.

11. Since the axle must be parallel to the rear of the chassis, measure the distance from the center of the pillow blocks to the rear of the chassis (Fig. 32). The difference between the two measurements must not exceed 1/8 in. (3 mm). If the difference exceeds 1/8 in. (3 mm), the axle is not parallel with the chassis and must be adjusted.

12. Check the deflection of the drive chain from the bottom of the tractor; refer to step 2.

13. Tip the tractor back to its normal operating position and install the chain cover.

14. Fill the crankcase with oil; refer to Filling the Crankcase with Oil, page 15.

15. Fill the fuel tank with gasoline; refer to Filling the Fuel Tank, page 12.

16. Install the battery; refer to Installing the Battery, page 27.

Wiring Diagram

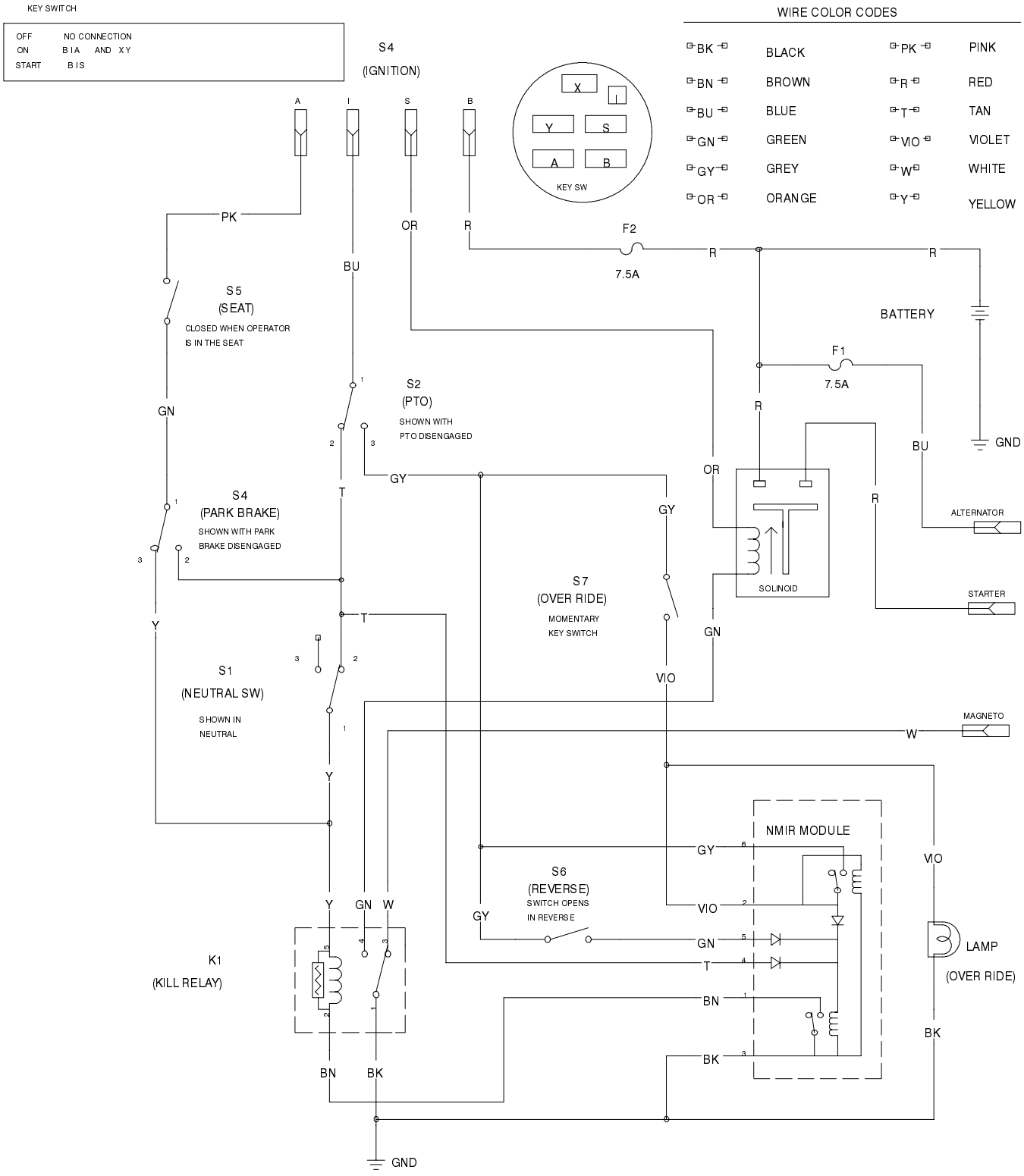

Washing the Underside of the Mower

After each use, wash the underside of the mower to prevent grass buildup for improved mulch action and clipping dispersal

1. Park the machine on a hard level surface, disengage the PTO, stop the engine, and remove the ignition key.
2. Attach the hose coupling to the end of the mower washout fitting, and turn the water on high (Fig. 33).

Note: Spread petroleum jelly on the washout fitting o-ring to make the coupling slide on easier and protect the o-ring.

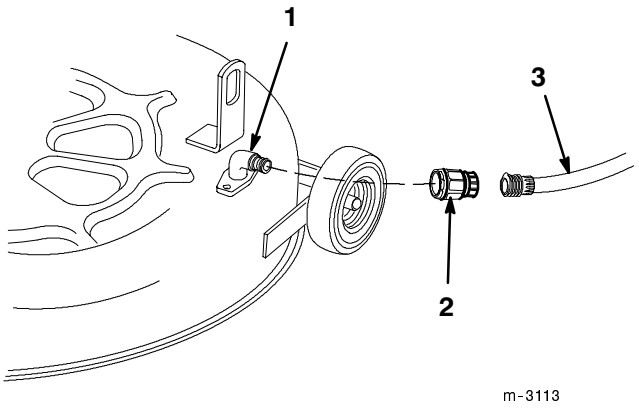

Figure 33

1. Washout port
2. Coupling (not supplied)
3. Hose

3. Lower the mower to the lowest height-of-cut.
4. Sit on the seat and start the engine. Engage the PTO and let the mower run for one to three minutes.
5. Disengage the PTO, stop the engine, and remove the ignition key. Wait for all moving parts to stop.
6. Turn the water off and remove the hose coupling from the washout fitting.

Note: If the mower is not clean after one washing, soak it and let it stand for 30 minutes. Then repeat the process.

7. Run the mower again for one to three minutes to remove excess water.

Warning

A broken or missing washout fitting could expose you and others to thrown objects or blade contact. Contact with blade or thrown debris contact will cause injury or death.

- **Replace broken or missing washout fitting immediately, before using mower again.**
- **Plug any hole(s) in mower with bolts and locknuts.**
- **Never put your hands or feet under the mower or through openings in the mower.**

Cleaning and Storage

1. Disengage the PTO, set the parking brake, stop the engine, and remove the ignition key.
2. Remove grass clippings, dirt, and grime from the external parts of the entire machine, especially the engine. Clean dirt and chaff from the outside of the engine cylinder head fins and blower housing.

Important You can wash the machine with mild detergent and water. **Do not use a pressure washer to wash the machine.** Pressure washing may damage the electrical system or wash away necessary grease at friction points. Avoid excessive use of water, especially near the control panel, lights, engine, and the battery.

3. Check the brake; refer to Brake, page 23.
4. Service the air cleaner; refer to Air Cleaner, page 24.
5. Grease the chassis; refer to Greasing and Lubrication, page 23.
6. Change the crankcase oil; refer to Engine Oil, page 22.
7. Check the tire pressure; refer to Tire Pressure, page 25.
8. For storage over 30 days, prepare the traction unit as follows.

   A. Add a petroleum based stabilizer/conditioner to fuel in the tank. Follow the mixing instructions from the stabilizer manufacturer (1 oz. per gallon). **Do not use an alcohol based stabilizer (ethanol or methanol).**

Note: A fuel stabilizer/conditioner is most effective when mixed with fresh gasoline and used at all times.

B. Run the engine to distribute conditioned fuel through the fuel system (5 minutes).

C. Stop the engine, allow it to cool, and drain the fuel tank; refer to Draining the Fuel Tank, page 26.

D. Restart the engine and run it until it stops.

E. Choke or prime the engine.

F. Start and run the engine until it will not start again. Use the primer, if equipped on machine, several times to ensure that no fuel remains in the primer system.

G. Dispose of fuel properly. Recycle as per local codes.

Important Do not store stabilizer/conditioned gasoline over 90 days.

9. Remove the spark plug(s) and check its condition; refer to Spark Plug, page 25. With the spark plug(s) removed from the engine, pour two tablespoons of engine oil into the spark plug hole. Use the electric starter to crank the engine and distribute the oil inside the cylinder. Install the spark plug(s); refer to Spark Plug, page 25. Do not install the wire on the spark plug(s).

10. Disconnect the negative battery cable. Clean the battery and battery terminals. Check the electrolyte level and charge it fully; refer to Battery, page 26. Leave the negative battery cable disconnected from the battery during storage.

Important The battery must be fully charged to prevent it from freezing and being damaged at temperatures below 32°F (0°C). A fully charged battery can be stored one winter season without recharging.

11. Check and tighten all bolts, nuts, and screws. Repair or replace any part that is worn or damaged.

12. Paint all scratched or bare metal surfaces. Paint is available from your Authorized Service Dealer.

13. Store the machine in a clean, dry garage or storage area. Remove the ignition and KeyChoice keys from the mower and keep them in a memorable place. Cover the machine to protect it and keep it clean.

Troubleshooting

Problem	Possible Causes	Corrective Action
The starter does not crank.	1. The deck engagement lever is engaged. 2. The battery is dead. 3. The electrical connections are corroded or loose. 4. The transaxle is in gear. 5. A relay or switch is damaged.	1. Move the deck engagement lever to Disengaged. 2. Charge the battery. 3. Check the electrical connections for good contact. 4. Position the shift lever in Neutral. 5. Contact an Authorized Service Dealer.
There is abnormal vibration.	1. The engine mounting bolts are loose. 2. There is a loose engine pulley, idler pulley, or blade pulley. 3. The engine pulley is damaged. 4. The cutting blade is unbalanced, bent, or loose. 5. The blade bolt is loose. 6. The drive belt is damaged.	1. Tighten the engine mounting bolts. 2. Tighten the appropriate pulley. 3. Contact an Authorized Service Dealer. 4. Install a new cutting blade. 5. Tighten the blade bolt. 6. Install the blade drive belt and check the idler pulley and belt guides for the correct position.

Problem	Possible Causes	Corrective Action
The engine does not idle or idles poorly.	1. The air cleaner is dirty.	1. Clean the air cleaner element.
	2. The idle speed is too low.	2. Adjust the carburetor.
	3. Dirt, water, or stale fuel is in the fuel system.	3. Contact an Authorized Service Dealer.
	4. The spark plug is pitted, fouled, or the gap is incorrect.	4. Install a new, correctly-gapped spark plug.
The engine loses power.	1. The engine load is excessive.	1. Reduce your ground speed.
	2. The air cleaner is dirty.	2. Clean the air cleaner element.
	3. The oil level in the crankcase is low.	3. Add oil to the crankcase.
	4. The cooling fins and air passages under the engine blower housing are plugged.	4. Remove the obstruction from the cooling fins and air passages.
	5. The spark plug is pitted, fouled, or the gap is incorrect.	5. Install a new, correctly-gapped spark plug.
	6. The vent hole in the fuel cap is plugged.	6. Clean or replace the fuel cap.
	7. The carburetor is adjusted incorrectly.	7. Adjust the carburetor.
	8. Dirt, water, or stale fuel is in fuel system.	8. Contact an Authorized Service Dealer.
The engine will not start, starts hard, or fails to keep running.	1. The fuel tank is empty.	1. Fill the fuel tank with gasoline.
	2. The choke is not on.	2. Move the choke lever to On.
	3. The air cleaner is dirty.	3. Clean or replace the air cleaner element.
	4. The spark plug wire is loose or disconnected.	4. Install the wire on the spark plug.
	5. The spark plug is pitted, fouled, or the gap is incorrect.	5. Install a new, correctly-gapped spark plug.
	6. Dirt, water, or stale fuel is in the fuel system.	6. Contact an Authorized Service Dealer.
	7. The battery is dead.	7. Charge the battery.
	8. The vent hole in the fuel tank cap is plugged.	8. Clean or replace the fuel cap.
	9. The carburetor is adjusted incorrectly.	9. Adjust the carburetor.
	10. A module or switch is damaged.	10. Contact an Authorized Service Dealer.
	11. The electrical connections are loose.	11. Check the electrical system to ensure good contact.

Problem	Possible Causes	Corrective Action
The engine overheats.	1. The engine load is excessive. 2. The oil level in the crankcase is low. 3. The cooling fins and air passages under the engine blower housing are plugged. 4. The carburetor is adjusted incorrectly.	1. Reduce your ground speed. 2. Add oil to the crankcase. 3. Remove the obstruction from the cooling fins and air passages. 4. Adjust the carburetor.
The machine does not drive.	1. The traction idler is adjusted incorrectly. 2. The traction belt is worn, loose, or broken. 3. The traction belt is off of the pulley. 4. The transaxle is not shifting gears. 5. The drive chain is off of the sprockets.	1. Adjust the traction drive belt. 2. Contact an Authorized Service Dealer. 3. Contact an Authorized Service Dealer. 4. Contact an Authorized Service Dealer. 5. Install and adjust the drive chain.
The blade does not rotate.	1. The blade drive belt is worn, loose, or broken. 2. The blade drive belt is off of the pulley.	1. Install a new blade drive belt. 2. Install the blade drive belt and check the idler pulley and belt guides for the correct position.


TORO®