Form No. 3440-537 Rev A

TORO®

Count on it.

Operator's Manual

60in or 72in Rear Discharge Rotary Mower

Groundsmaster® 3200 or 3300 Series Traction Unit

Model No. 31971—Serial No. 400000000 and Up

Model No. 31973—Serial No. 400000000 and Up

Register at www.Toro.com.
Original Instructions (EN)

CE

3440-537 A

This product complies with all relevant European directives. For details, please see the Declaration of Incorporation (DOI) at the back of this publication.

⚠ WARNING

CALIFORNIA
Proposition 65 Warning

Use of this product may cause exposure to chemicals known to the State of California to cause cancer, birth defects, or other reproductive harm.

Introduction

This rotary-blade lawn cutting unit is mounted to a ride-on machine and is intended to be used by professional, hired operators in commercial applications. It is primarily designed for cutting grass on well-maintained lawns in parks, sports fields, and on commercial grounds. Using this product for purposes other than its intended use could prove dangerous to you and bystanders.

Read this information carefully to learn how to operate and maintain your product properly and to avoid injury and product damage. You are responsible for operating the product properly and safely.

Visit www.Toro.com for product safety and operation training materials, accessory information, help finding a dealer, or to register your product.

Whenever you need service, genuine Toro parts, or additional information, contact an Authorized Service Dealer or Toro Customer Service and have the model and serial numbers of your product ready. Figure 1 identifies the location of the model and serial numbers on the product. Write the numbers in the space provided.

Important: **With your mobile device, you can scan the QR code on the serial number decal (if equipped) to access warranty, parts, and other product information.**

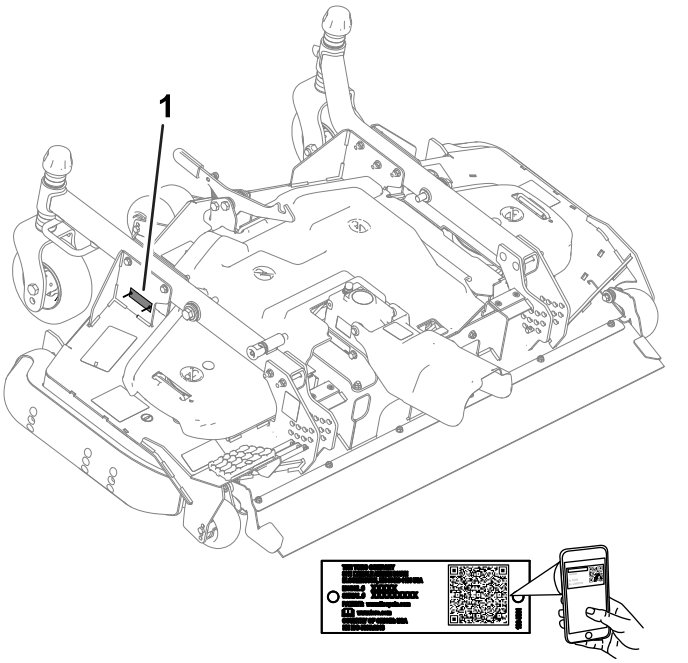

g295738

Figure 1

1. Model and serial number location

Model No. _____

Serial No. _____

This manual identifies potential hazards and has safety messages identified by the safety-alert symbol (Figure 2), which signals a hazard that may cause serious injury or death if you do not follow the recommended precautions.



g000502

Figure 2

1. Safety-alert symbol

This manual uses 2 words to highlight information. **Important** calls attention to special mechanical information and **Note** emphasizes general information worthy of special attention.

© 2020—The Toro® Company
8111 Lyndale Avenue South
Bloomington, MN 55420

Contact us at www.Toro.com.
Printed in the USA
All Rights Reserved

Contents

Safety 3
General Safety 3
Cutting Unit Safety 3
Safety and Instructional Decals 4
Setup 7
1 Preparing the Machine 7
2 Installing the CE Kit 7
3 Installing the Debris Guard to the Front Axle 7
4 Installing the Cutting Unit to the Traction Unit 8
5 Installing the PTO Cover 9
6 Leveling the Cutting Unit 9
7 Greasing the Cutting Unit 10
Product Overview 10
Specifications 10
Attachments/Accessories 10
Operation 11
Adjusting the Height of Cut 11
Adjusting the Cutting-Unit Pitch 12
Adjusting the Anti-Scalp Rollers 13
Adjusting the Skid 13
Correcting a Cutting Unit Mismatch 13
Operating Tips 14
Maintenance 15
Recommended Maintenance Schedule(s) 15
Daily Maintenance Checklist 15
Greasing the Bearings and Bushings 16
Checking the Lubricant in the Gearbox 16
Checking the Torque of the PTO Driveshaft-to-Gearbox Fasteners 16
Removing the Cutting Unit from the Traction Unit 17
Servicing the Bushings in the Castor Arms 18
Servicing the Castor Wheels and Bearings 18
Servicing the Cutting Blades 18
Checking and Correcting Mismatch of Blades 20
Replacing the Drive Belt 21
Cleaning Under the Cutting Unit 21
Storage 22

Safety

This machine has been designed in accordance with EN ISO 5395 (when equipped with the CE Kit) and ANSI B71.4-2017.

General Safety

This product is capable of amputating hands and feet and of throwing objects. Always follow all safety instructions to avoid serious personal injury

- Read and understand the contents of this *Operator's Manual* before starting the machine.
- Use your full attention while operating the machine. Do not engage in any activity that causes distractions; otherwise, injury or property damage may occur.
- Do not put your hands or feet near moving components of the machine.
- Do not operate the machine without all guards and other safety protective devices in place and functioning properly on the machine.
- Keep clear of any discharge opening.
- Keep bystanders and children out of the operating area. Never allow children to operate the machine.
- Before you leave the operator's position, do the following:
  - Park the machine on a level surface.
  - Lower the cutting unit(s).
  - Disengage the drives.
  - Engage the parking brake (if equipped).
  - Shut off the engine and remove the key.
  - Wait for all movement to stop.

Improperly using or maintaining this machine can result in injury. To reduce the potential for injury, comply with these safety instructions and always pay attention to the safety-alert symbol ⚠, which means Caution, Warning, or Danger—personal safety instruction. Failure to comply with these instructions may result in personal injury or death.

Cutting Unit Safety

- The cutting unit is only a complete machine when installed on a traction unit. Read the traction unit *Operator's Manual* carefully for complete instructions on the safe use of the machine.
- Stop the machine, remove the key, and wait for all moving parts to stop before inspecting the attachment after striking an object or if there is an abnormal vibration in the machine. Make all necessary repairs before resuming operation.

- Keep all parts in good working condition and all hardware tightened. Replace all worn or damaged decals.
- Use only accessories, attachments, and replacement parts approved by Toro.

Safety and Instructional Decals

Safety decals and instructions are easily visible to the operator and are located near any area of potential danger. Replace any decal that is damaged or missing.



decal93-6697

93-6697

1. Read the *Operator's Manual*.
2. Add SAE 80w-90 (API GL-5) oil every 50 hours.

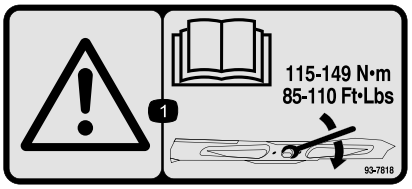

decal93-7818

93-7818

1. Warning—read the *Operator's Manual* for instructions on torquing the blade bolt/nut to 115 to 149 N·m (85 to 110 ft-lb).

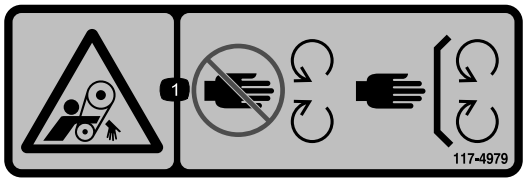

decal117-4979

117–4979

1. Entanglement hazard, belt—stay away from moving parts, keep all guards and shields in place.

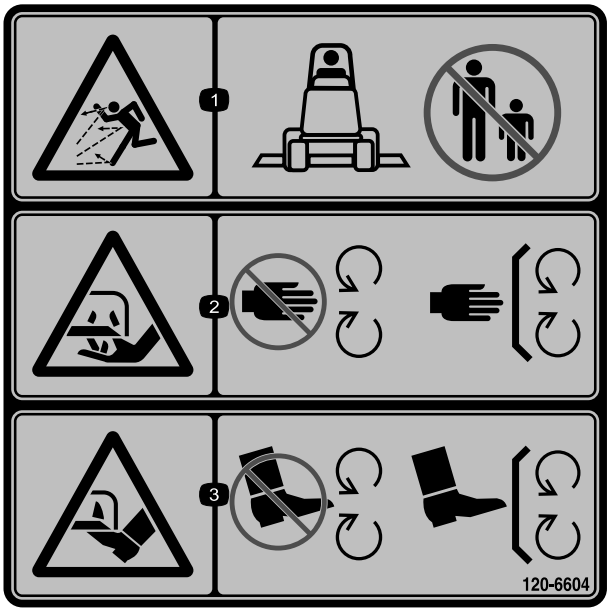

decal120-6604

120-6604

1. Thrown object hazard—keep bystanders away from the machine.
2. Cutting/dismemberment hazard of hand, mower blade—stay away from moving parts, keep all guards and shields in place.
3. Cutting/dismemberment hazard of foot, mower blade—stay away from moving parts, keep all guards and shields in place.

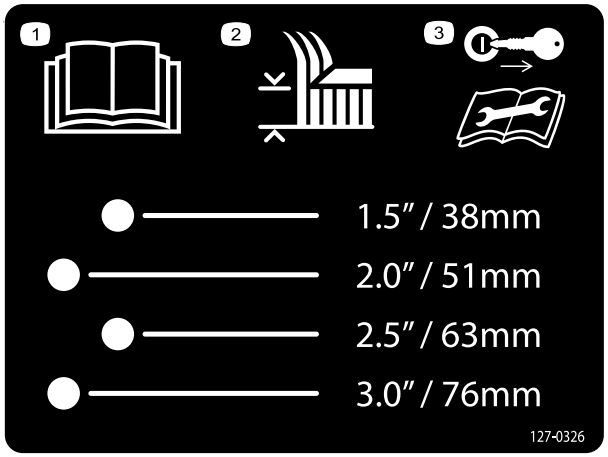

decal127-0326

127-0326

1. Read the *Operator's Manual*.
2. Height of cut
3. Remove the key and read the *Operator's Manual* before performing maintenance.



decal133-8061

133-8061

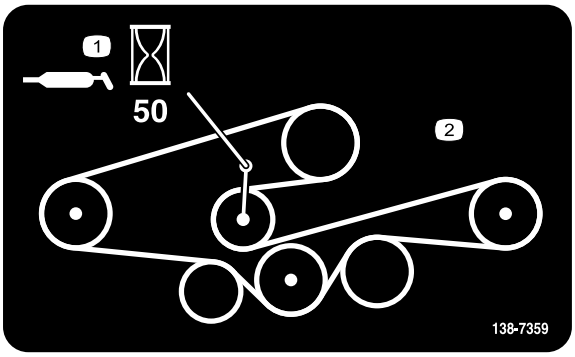

decal138-7359

138-7359

1. Grease every 50 hours.
2. Belt routing

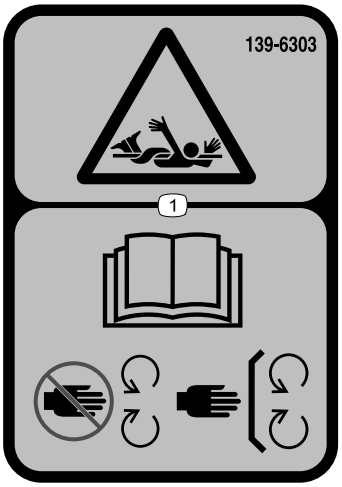

decal139-6303

139-6303

1. Entanglement hazard—read the *Operator's Manual*; stay away from moving parts; keep all guards and shields in place.

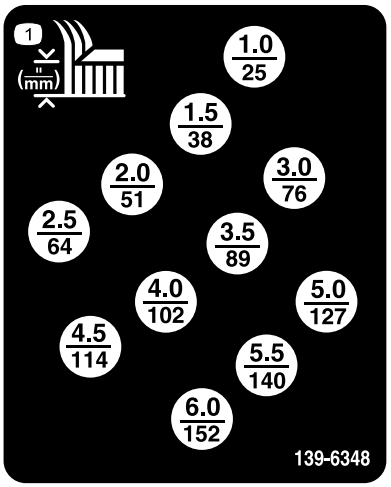

decal139-6348

139-6348

1. Height of cut (inches/millimeters)

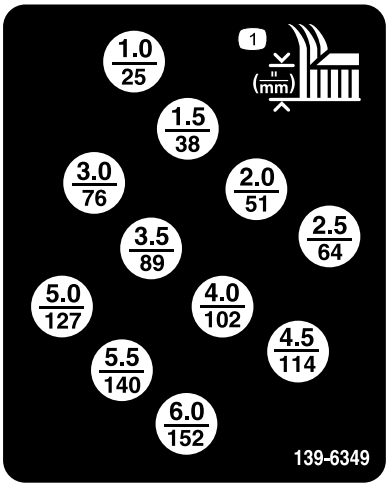

decal139-6349

139-6349

1. Height of cut (inches/millimeters)

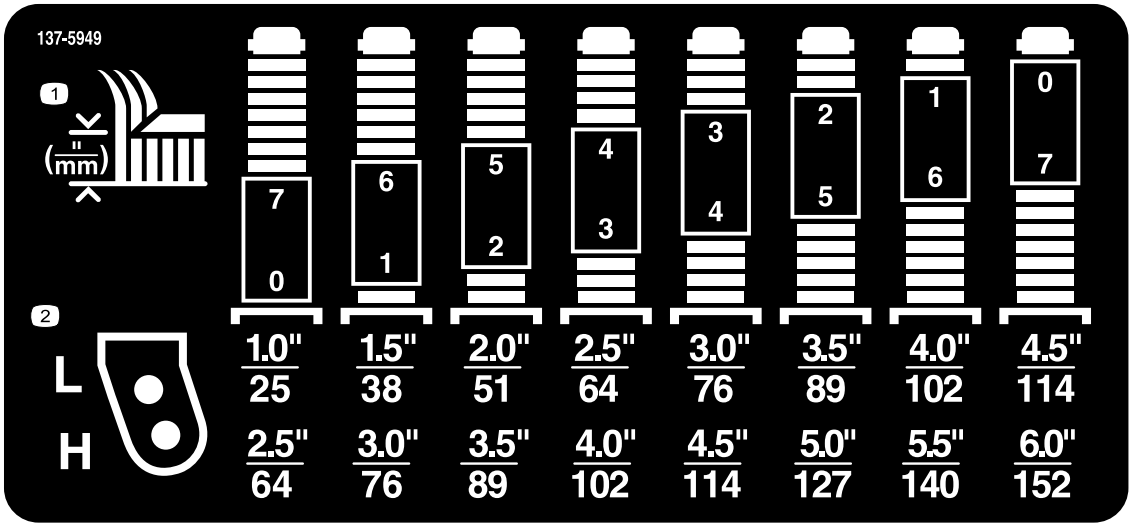

decal137-5949

137-5949

1. Height of cut
2. Mounting holes

Setup

Loose Parts

Use the chart below to verify that all parts have been shipped.

Procedure	Description	Qty.	Use
1	No parts required	–	Prepare the machine.
2	No parts required	–	Install the CE kit (if required).
3	Debris guard Bracket Rivet	1 1 5	Install the debris guard to the front axle.
4	Hex-head bolt Washer Height-of-cut pin	2 2 2	Install the cutting unit to the traction unit.
5	Shoulder bolt Spacer	2 2	Install the PTO cover.
6	No parts required	–	Level the cutting unit.
7	No parts required	–	Grease the cutting unit.

⚠ WARNING

If you leave the key in the switch, someone could accidentally start the engine and seriously injure you or other bystanders.

Remove the key from the switch before you install the cutting unit

⚠ DANGER

If the engine is started and the PTO shaft is allowed to rotate, serious injury could result.

Do not start the engine and engage the PTO switch when the PTO shaft is not connected to the gearbox on the cutting unit.

Note: Determine the left and right sides of the machine from the normal operating position.

1

Preparing the Machine

No Parts Required

Procedure

1. Park the machine on a level surface.
2. Engage the parking brake.
3. Shut off the engine and remove the key.

2

Installing the CE Kit

If Required (CE-Compliant Countries Only)

No Parts Required

Procedure

If you use this machine in a country that complies to CE standards, install the CE Kit; refer to the kit *Installation Instructions*.

3

Installing the Debris Guard to the Front Axle

Parts needed for this procedure:

1	Debris guard
1	Bracket
5	Rivet

Procedure

Use 5 rivets to install the bracket and debris guard to the front axle (Figure 3).

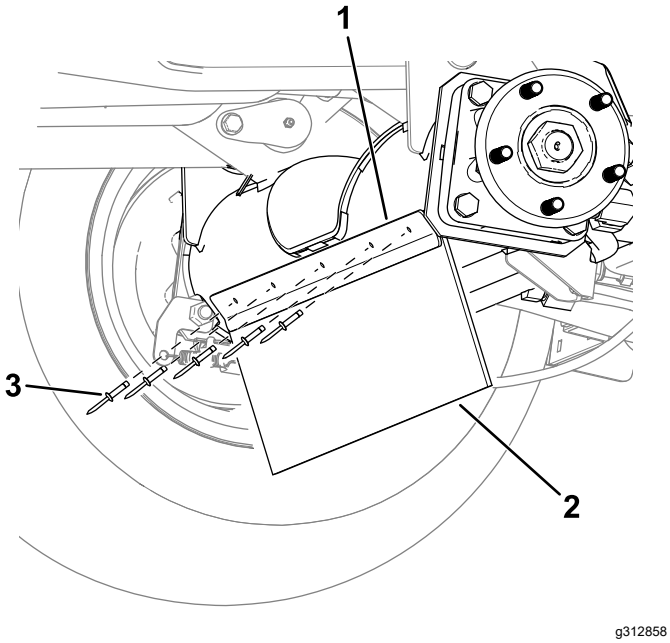

Figure 3

Left side of the machine shown.

1. Bracket
2. Debris guard
3. Rivet

4

Installing the Cutting Unit to the Traction Unit

Parts needed for this procedure:

2	Hex-head bolt
2	Washer
2	Height-of-cut pin

Procedure

1. Park the machine on a level surface, move the lift arms to the lowest position, engage the parking brake, shut off the engine, and remove the key.
2. Position the cutting unit in front of the traction unit.
3. Slide the PTO-shaft yoke onto the gearbox shaft and secure the shafts together with 2 bolts and nuts in opposite directions (Figure 4).

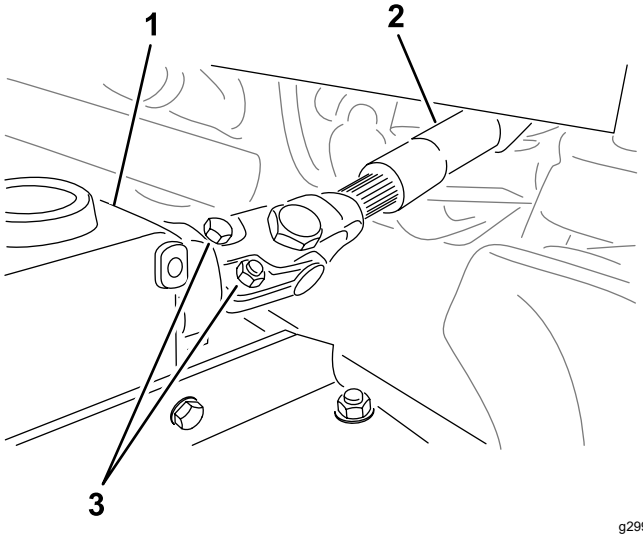

Figure 4

1. Gearbox
2. PTO shaft
3. Bolts and nuts

4. Tighten the bolts and nuts (Figure 4); refer to the machine *Operator's Manual* for torque specifications.
5. Push a lift arm down until the holes in the lift arm line up with the holes in the castor arms, then insert a washer and bolt through both arms.
6. Align the lift-arm holes with the castor-arm holes.

7. Use 2 hex-head bolts and 2 washers to secure the castor arms to the lift arms (Figure 5).

   If you have previously used the bolts to install the cutting unit: Apply thread-locking compound to the threads of the bolts.

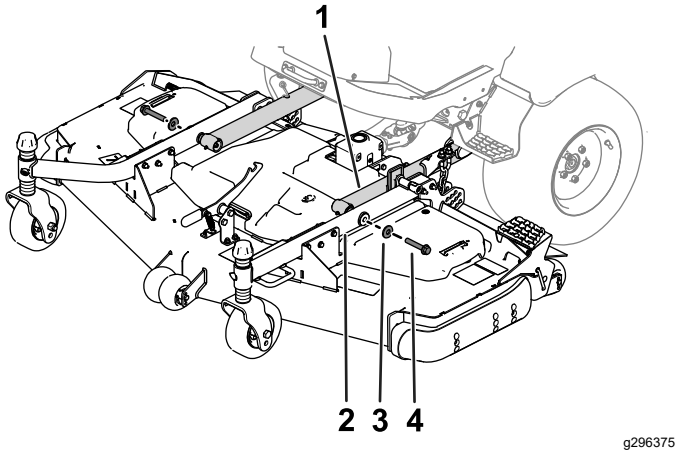

Figure 5

1. Lift arm
2. Castor arm
3. Washer
4. Bolt

8. Torque the bolts to the appropriate specification:
   - If you are using the bolts to install the cutting unit for the first time:

     Torque the bolts to 256 to 313 N·m (189 to 231 ft-lb).
   - If you have previously used the bolts to install the cutting unit:

     Torque the bolts to 195 to 239 N·m (144 to 176 ft-lb).
9. Set the height of cut; refer to Adjusting the Height of Cut (page 11).

5

Installing the PTO Cover

Parts needed for this procedure:

2	Shoulder bolt
2	Spacer

Procedure

Use 2 shoulder bolts and 2 spacers to secure the PTO cover to the gearbox (Figure 6).

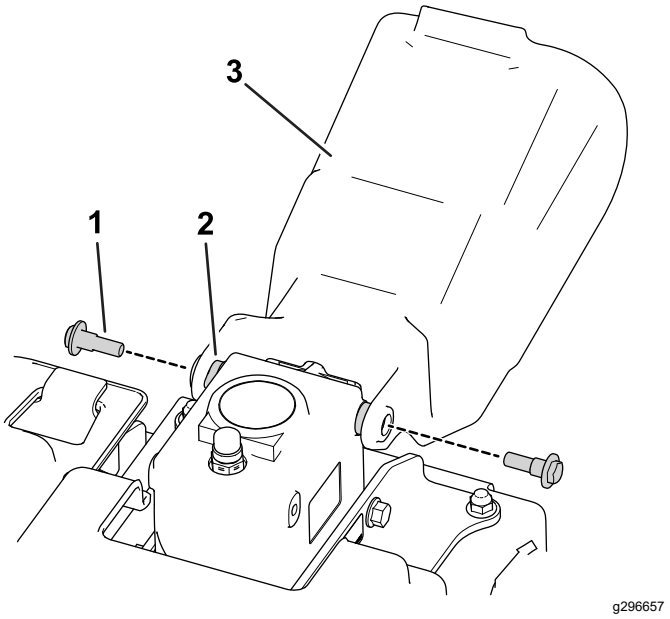

Figure 6

1. Shoulder bolt
2. Spacer
3. PTO cover

6

Leveling the Cutting Unit

No Parts Required

Procedure

Note: Perform this procedure on a flat, level surface.

1. Rotate the blade on each outer spindle until the ends face forward and backward.
2. Measure from the floor to the front tip of the blade.
3. Raise the cutting unit to the TRANSPORT position.
4. Adjust the shims on the front caster forks to match the desired height of cut.
5. Rotate the blades 180° and measure from the floor to the rear-facing tip of the blade.
6. Loosen the lower jam nuts on the height-of-cut chain U-bolt (Figure 7).

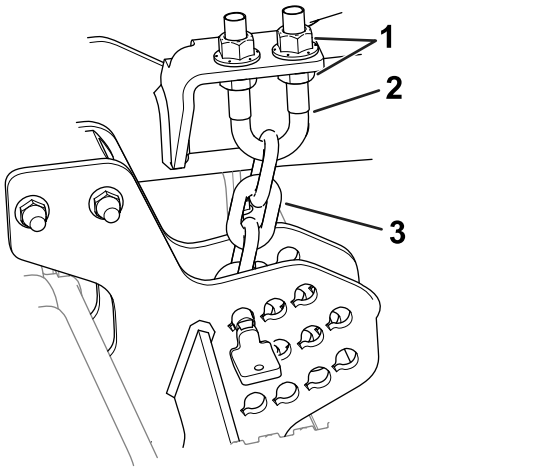

Figure 7

1. Jam nuts
2. U-bolt
3. Height-of-cut chain

7. Adjust the nuts (Figure 7) to raise or lower the rear of the cutting unit so that the tips of the rear blades are 6 to 10 mm (1/4 to 3/8 inch) higher than the front tips.
8. Tighten the jam nuts.

7

Greasing the Cutting Unit

No Parts Required

Procedure

Before operating the cutting unit, it must be greased to ensure proper lubricating characteristics; refer to Greasing the Bearings and Bushings (page 16). Failure to properly grease the machine will result in premature failure of critical parts.

Product Overview

Specifications

Note: Specifications and design are subject to change without notice.

Width of Cut	• Model No. 31971: 1.52 m (60 inches) • Model No. 31973: 1.82 m (72 inches)
Height of Cut	Adjustable from 25 to 152 mm (1 to 6 inches) in 13 mm (1/2 inch) increments
Net Weight	• Model No. 31971: 209 kg (460 lb) • Model No. 31973: 236 kg (520 lb)

Attachments/Accessories

A selection of Toro approved attachments and accessories is available for use with the machine to enhance and expand its capabilities. Contact your Authorized Service Dealer or authorized Toro distributor or go to www.Toro.com for a list of all approved attachments and accessories.

To ensure optimum performance and continued safety certification of the machine, use only genuine Toro replacement parts and accessories. Replacement parts and accessories made by other manufacturers could be dangerous, and such use could void the product warranty.

Operation

Note: Determine the left and right sides of the machine from the normal operating position.

⚠ CAUTION

If you leave the key in the ignition switch, someone could accidently start the engine and seriously injure you or other bystanders.

Remove the key from the ignition before you do any maintenance.

Adjusting the Height of Cut

The height of cut is adjustable from 25 to 152 mm (1 to 6 inches) in 13 mm (1/2 inch) increments. To adjust the height of cut:

1. Park the machine on a level surface, raise the cutting unit to the TRANSPORT position, engage the parking brake, shut off the engine, and remove the key.
2. Perform the following procedures:
   - Position the castor wheel axles in the upper or lower holes of the castor forks; refer to Positioning the Castor-Wheel Axles (page 11).
   - Add or remove an equal number of spacers from the castor forks; refer to Positioning the Castor-Fork Spacers (page 11).
   - Use the pins in height-of-cut plates to position the lift-arm chains; refer to Positioning the Height-of-Cut Chain (page 12).

Positioning the Castor-Wheel Axles

Position the castor-wheel axles in the same holes in both castor forks. Refer to Figure 8 and Figure 9 to determine the correct holes for the setting.

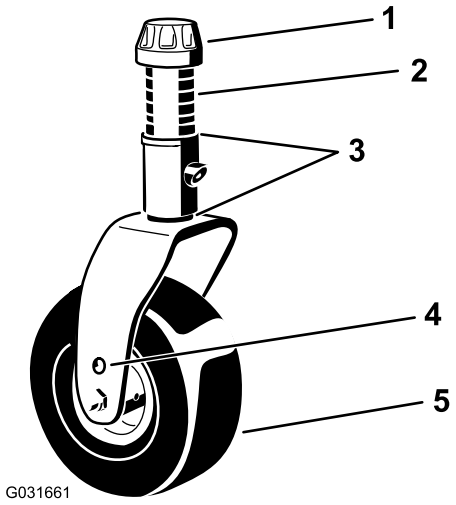

g031661

Figure 8

1. Tensioning cap
2. Spacers
3. Shims
4. Axle mounting holes
5. Castor wheel

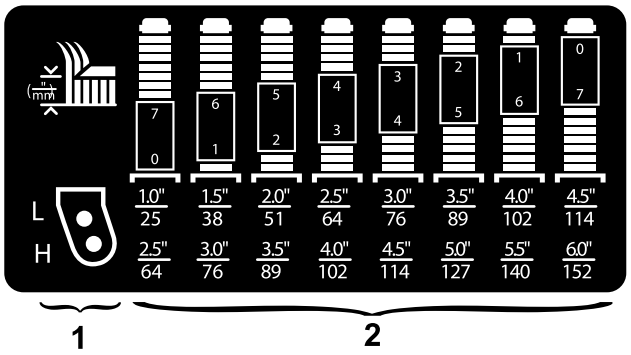

g296889

Figure 9

1. Castor wheel height-of-cut mounting holes
2. Castor fork height-of-cut spacers

Note: If you operate with a 64 mm (2-1/2 inch) height of cut or higher, set the axle bolt in the lower hole to prevent grass buildup. If you detect grass buildup while operating, reverse the machine direction to pull any clippings away from the wheel/fork area.

Positioning the Castor-Fork Spacers

1. Remove the tensioning cap from the spindle shaft (Figure 8) and slide the spindle out of the castor arm. Put the 2 shims onto the spindle shaft as they were originally installed. These shims are required to achieve a level across the entire width of the cutting units.
2. Slide the appropriate number of spacers onto the spindle shaft to get the desired height of cut (Figure 8).

Refer to Figure 9 to determine the combinations of spacers for your desired height-of-cut setting.

Note: You may use the shims in any combination above or below the castor-arm hub (as required) to achieve the desired height of cut or cutting-unit level.

3. Push the castor spindle through the castor arm.
4. Install the shims (as they were originally installed) and the remaining spacers onto the spindle shaft.
5. Install the tensioning cap to secure the assembly.

Positioning the Height-of-Cut Chain

1. Remove the pins that secure the height-of-cut chains to the rear of the cutting unit (Figure 10).

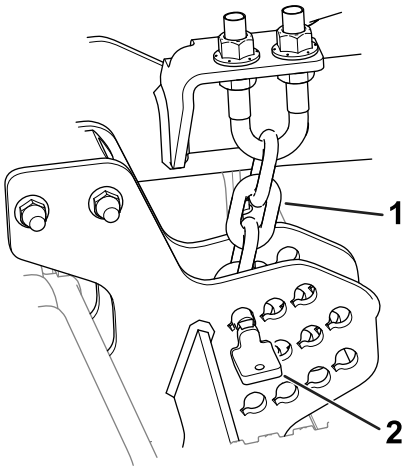

g296784

Figure 10

1. Height-of-cut chain
2. Pin

2. Refer to the height-of-cut decal to determine the appropriate hole for your desired height of cut.

   Note: The decal [Part No. 139-6348 and 139-6349—shown in Safety and Instructional Decals (page 4)] is adjacent to each height-of-cut plate.

3. Mount the height-of-cut chains to the desired height-of-cut hole with the pin.

   The pin should be installed in the lowest height-of-cut chain link. The chain should hang straight down (Figure 10); it should not be twisted.

Adjusting the Cutting-Unit Pitch

A blade pitch of 6 to 9.5 mm (1/4 to 3/8 inch) is recommended (i.e., the back of the blade plane is 6 to 9.5 mm (1/4 to 3/8 inch) higher than the front). A pitch larger than 9.5 mm (3/8 inch) results in less required power, larger clippings, and a poorer quality of cut. A pitch less than 6 mm (1/4 inch) results in more required power, smaller clippings and a better quality of cut.

1. Park the machine on a level surface, lower the cutting unit, engage the parking brake, shut off the engine, and remove the key.
2. Set the cutting unit to the desired height-of-cut.
3. Rotate 1 blade so that it points straight forward.
4. Using a short ruler, measure from the floor to the front tip of the blade. Rotate the blade tip to the rear and measure from the floor to the tip of the blade.
5. Subtract the front dimension from the rear dimension to calculate the blade pitch.
6. Loosen the jam nuts at the top or bottom of the height-of-cut chain U-bolt (Figure 11).

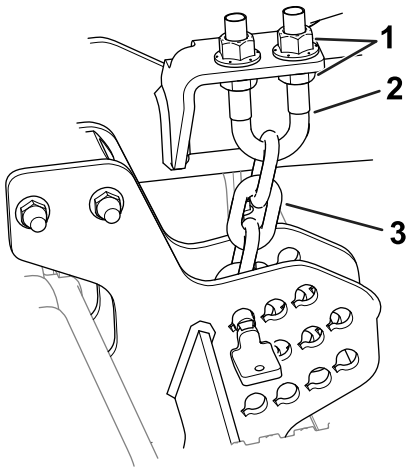

g296783

Figure 11

1. Jam nuts
2. U-bolt
3. Height-of-cut chain

7. Adjust the other set of nuts to raise or lower the rear of the cutting unit and attain the correct mower-deck pitch.
8. Tighten the jam nuts.

Adjusting the Anti-Scalp Rollers

Whenever you change the height-of-cut, adjust the height of the anti-scalp rollers (Figure 12).

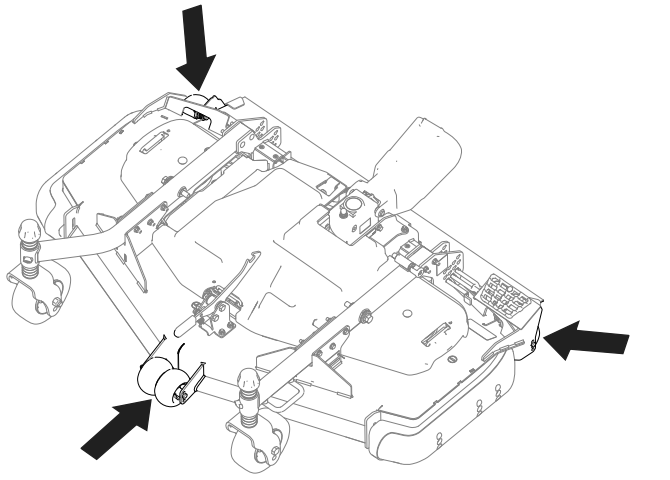

g296901

Figure 12

1. Park the machine on a level surface, lower the cutting unit, engage the parking brake, shut off the engine, and remove the key.
2. Shut off the engine, remove the key, and wait for all moving parts to stop before leaving the operating position.
3. Adjust the anti-scalp rollers as shown in Figure 13.

   Note: Select a hole so the anti-scalp roller is positioned to the nearest corresponding height-of-cut desired.

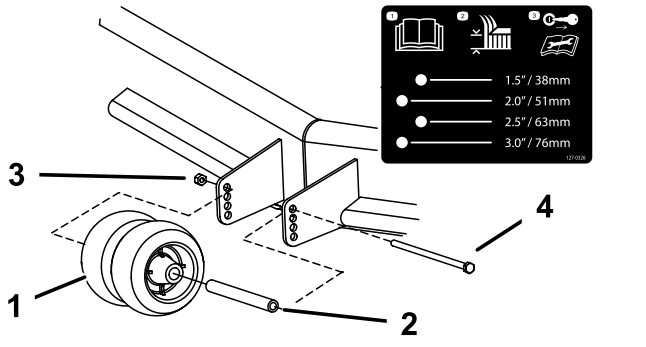

g296902

Figure 13

Front rollers shown

1. Anti-scalp roller
2. Bushing
3. Flange nut
4. Bolt

Adjusting the Skid

Mount the skid in the lower position when operating in height of cuts higher than 64 mm (2-1/2 inches) and in the higher position when operating in height of cuts lower than 64 mm (2-1/2 inches).

1. Park the machine on a level surface, lower the cutting unit, engage the parking brake, shut off the engine, and remove the key.
2. Remove the flange-head bolts and nuts from the skid.
3. Move the skid to the desired position and secure it to the cutting unit with the flange-head bolts and nuts (Figure 14).

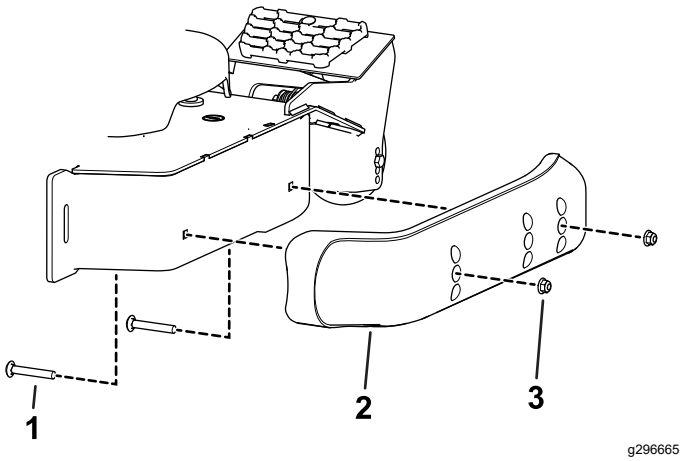

g296665

Figure 14

1. Flange-head bolt
2. Skid
3. Nut

Correcting a Cutting Unit Mismatch

Due to differences in grass conditions and the counterbalance setting of the traction unit, it is advised that grass be cut and appearance checked before formal cutting is started.

1. Park the machine on a level surface, lower the cutting unit, engage the parking brake, shut off the engine, and remove the key.
2. Set the cutting unit to the desired height of cut; refer to Adjusting the Height of Cut (page 11).
3. Check and adjust the front and rear traction-unit tire pressure to the specified tire pressure in the traction unit *Operator's Manual*.
4. Check for bent blades; refer to Checking for a Bent Blade (page 19).
5. Cut grass in a test area to determine if all cutting units are cutting at the same height.

6. If cutting unit adjustments are still needed, find a flat surface using a 2 m (6 ft) or longer straight edge.
7. To ease measuring blade plane, raise the height of cut to the highest position; refer to Adjusting the Height of Cut (page 11).
8. Lower cutting unit onto the flat surface. Remove the covers from the top of the cutting units.
9. Rotate the blade on each spindle until the ends face forward and backward.
10. Measure from the floor to the front tip of the cutting edge.

    If the measurements do not match the desired height of cut and pitch, refer to Adjusting the Cutting-Unit Pitch (page 12).
11. Adjust the castor-wheel spacers to match the height of cut listed on the castor-wheel decal; refer to Positioning the Castor-Fork Spacers (page 11).

Operating Tips

Fast Throttle Setting/Ground Speed

To maintain enough power for the machine and deck while mowing, operate the engine at the fast throttle position and adjust your ground speed for conditions. Decrease the ground speed as the load on the cutting blades increases. Increase the ground speed as the load on the blades decreases.

Mowing Direction

Alternate mowing direction to avoid making ruts in the turf over time. This also helps disperse clippings which enhances decomposition and fertilization.

Cutting Speed

To improve cut quality, use a slower ground speed.

Avoid Cutting Too Low

If the cutting width of the cutting unit is wider than the mower you previously used, raise the cutting height to ensure that uneven turf is not cut too short.

Select the Proper Height-of-Cut Setting to Suit Conditions

Remove approximately 1 inch (25 mm) or no more than 1/3 of the grass blade when cutting. In exceptionally lush and dense grass, you may have to slow down the forward speed and/or raise the height-of-cut to the next higher setting.

Important: **If cutting more than 1/3 of the grass blade off, or in sparse long grass or dry conditions, the use of flat sail blades is recommended to reduce air-borne chaff, debris, and deck drive component strain.**

Long Grass

If the grass is ever allowed to grow slightly longer than normal, or if it contains a high degree of moisture, raise the cutting height higher than the usual setting and cut the grass. Then, cut the grass again using the lower, normal setting.

Keep the Cutting Unit Clean

Clean clippings and dirt from the underside of the cutting unit after each use. If grass and dirt build up inside the cutting unit, cutting quality will eventually become unsatisfactory.

To reduce the risk of fire hazard, keep the engine, muffler, battery compartment, parking brake, cutting units, and fuel storage compartment free of grass, leaves, or excessive grease. Clean up any spilled oil or fuel.

Blade Maintenance

- Maintain a sharp blade throughout the cutting season; a sharp blade cuts cleanly without tearing or shredding the grass blades. Tearing and shredding turns grass brown at the edges, which slows growth and increases the chance of disease.
- Check the blades daily for sharpness and for any wear or damage. Sharpen the blades as necessary.
- If a blade is damaged or worn, replace it immediately with a genuine Toro replacement blade. Refer to Removing and Installing the Cutting-Unit Blade(s) (page 19).

Maintenance

Note: Determine the left and right sides of the machine from the normal operating position.

Recommended Maintenance Schedule(s)

Maintenance Service Interval	Maintenance Procedure
After the first 2 hours	• Tighten the castor wheel nuts.
After the first 10 hours	• Check the PTO driveshaft-to-gearbox fastener torque. • Tighten the castor wheel nuts.
After the first 50 hours	• Change the gearbox lubricant.
Before each use or daily	• Lubricate the castor arm bushings. • Clean the cutting unit.
Every 50 hours	• Lubricate the grease fittings. Lubricate the grease fittings immediately after every washing. • Check the gearbox lubricant. • Tighten the castor wheel nuts. • Check the blade drive belt adjustment. • Clean under the cutting unit belt covers.
Every 100 hours	• Check the PTO driveshaft-to-gearbox fastener torque.
Every 400 hours	• Change the gearbox lubricant.

Daily Maintenance Checklist

Duplicate this page for routine use.

Maintenance Check Item	For the week of:						
	Mon.	Tues.	Wed.	Thurs.	Fri.	Sat.	Sun.
Check the condition of the blades							
Lubricate all grease fittings[1]							
Touch-up damaged paint							
1. Immediately after every washing, regardless of the interval listed.							

Notation for Areas of Concern		
Inspection performed by:		
Item	Date	Information

⚠ CAUTION

If you leave the key in the ignition switch, someone could accidently start the engine and seriously injure you or other bystanders.

Remove the key from the ignition before you do any maintenance.

Greasing the Bearings and Bushings

Service Interval: Every 50 hours Lubricate the grease fittings immediately after every washing.

The machine has grease fittings that you must lubricate regularly with No. 2 lithium grease.

1. Park the machine on a level surface, lower the cutting unit, engage the parking brake, shut off the engine, and remove the key.
2. Lubricate the following areas:
   - Castor fork shaft bushings (4) (Figure 15).

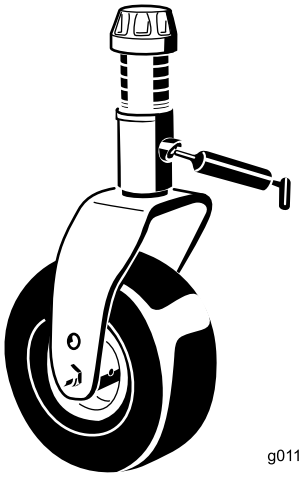

g011557

Figure 15

- Spindle shaft bearings (3—located under the pulley) (Figure 16)

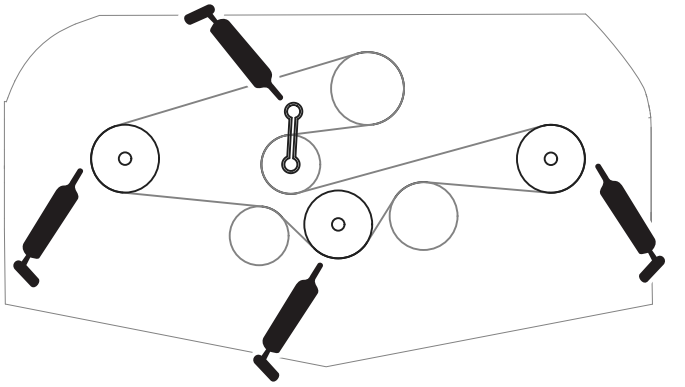

g296805

Figure 16

- Idler arm shaft bearings (Figure 16)

Checking the Lubricant in the Gearbox

Service Interval: Every 50 hours

After the first 50 hours

Every 400 hours

The gearbox in designed to operate on SAE 80-90 weight gear lube. Although the gearbox comes with lubricant from the factory, check the level before operating the cutting unit. The gearbox capacity is 283 ml (15 fl oz).

1. Park the machine on a level surface, lower the cutting unit, engage the parking brake, shut off the engine, and remove the key.
2. Remove the dipstick/fill plug from the top of the gearbox (Figure 17) and ensure that the lubricant is between the marks on the dipstick. If the lubricant level is low, add enough lubricant until the level is between the marks.

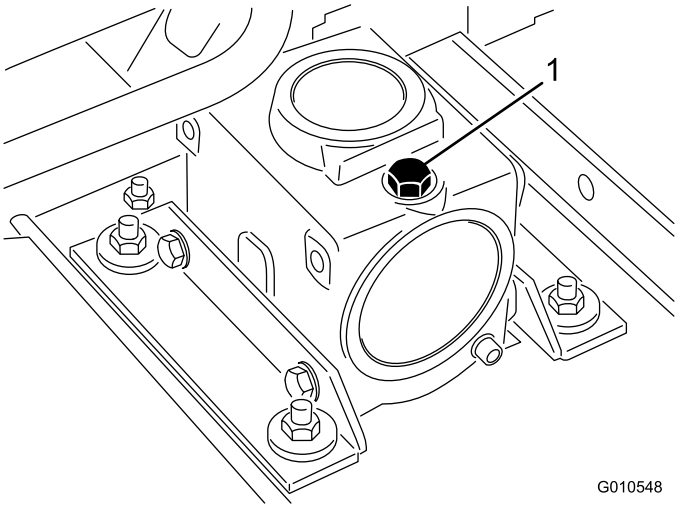

G010548

g010548

Figure 17

1. Dipstick/fill plug

3. Install the dipstick and torque it to 9 N·m (84 in-lbs).

Checking the Torque of the PTO Driveshaft-to-Gearbox Fasteners

Service Interval: After the first 10 hours

Every 100 hours

Check the torque of the fasteners that secure the PTO driveshaft to the gearbox (Figure 18); refer to the setup section in your machine *Operator's Manual* for the appropriate torque specification.

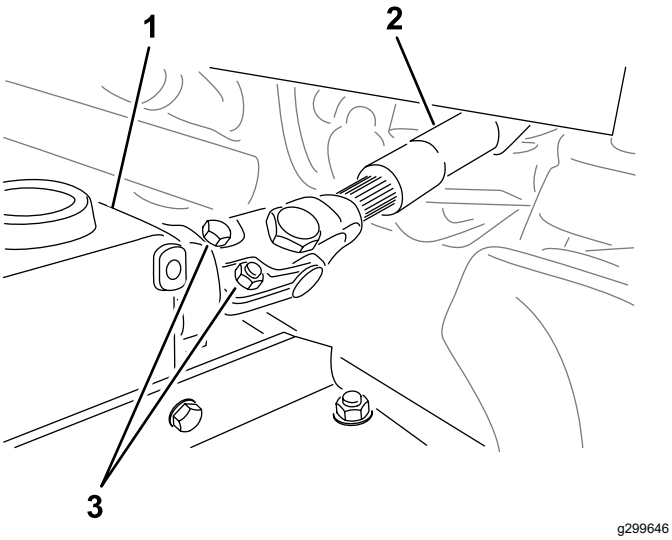

g299646

Figure 18

1. Gearbox
2. Bolts and nuts
3. PTO driveshaft

Removing the Cutting Unit from the Traction Unit

1. Park the machine on a level surface with the cutting unit raised.
2. Remove the height-of-cut pins (Figure 19) from the cutting-unit side plates.

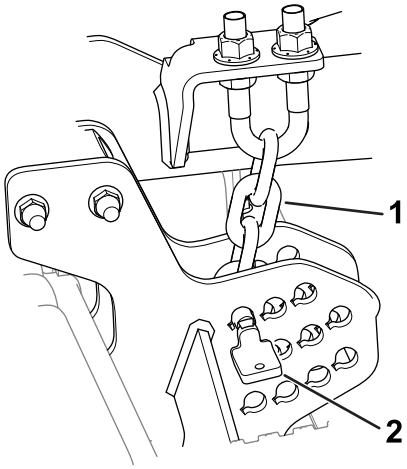

g296784

Figure 19

1. Height-of-cut chain
2. Pin

3. Lower the cutting unit, engage the parking brake, shut off the engine, and remove the key.
4. Remove the bolts and washers that secure the lift arms to the castor arms.

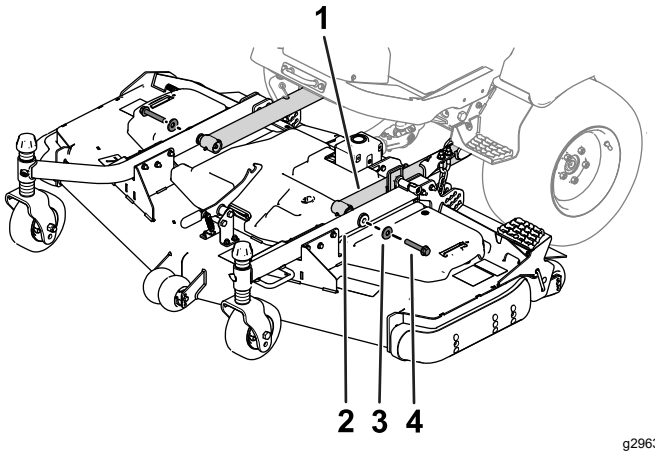

g296375

Figure 20

1. Lift arm
2. Castor arm
3. Washer
4. Bolt

5. Remove the bolts and nuts from the PTO shaft (Figure 21) and slide the yoke out of the gearbox.

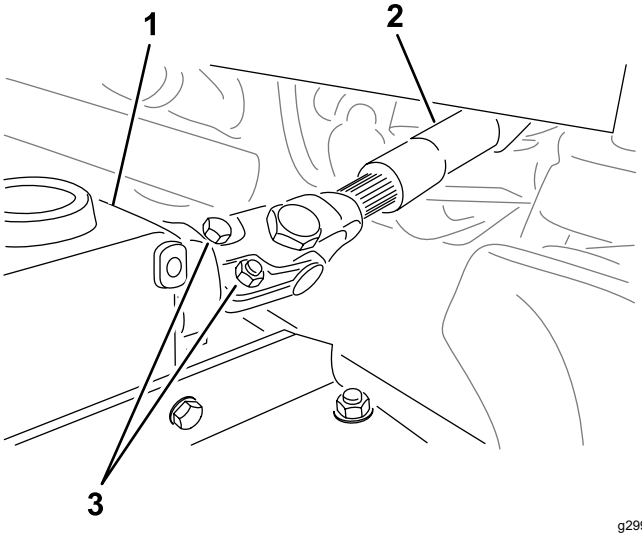

g299646

Figure 21

1. Gearbox
2. PTO shaft
3. Bolts and nuts

⚠ DANGER

If the engine is started and the PTO shaft is allowed to rotate, serious injury could result.

Do not start the engine and engage the PTO lever when the PTO shaft is not connected to the gearbox on the cutting unit.

Servicing the Bushings in the Castor Arms

The castor arms have bushings pressed into the top and bottom of the tube, and after many hours of operation, the bushings wear.

To check the bushings, move the castor fork back and forth and from side to side. If the castor spindle is loose inside the bushings, the bushings are worn; replace them.

1. Park the machine on a level surface, lower the cutting unit, engage the parking brake, shut off the engine, and remove the key.
2. Remove the tensioning cap, spacer(s), and thrust washer from the top of the castor spindle.
3. Pull the castor spindle out of the mounting tube. Allow the thrust washer and spacer(s) to remain on the bottom of the spindle.
4. Insert a pin punch into the top or bottom of the mounting tube and drive the bushing out of the tube (Figure 22). Also, drive the other bushing out of the tube. Clean the inside of the tubes to remove dirt.

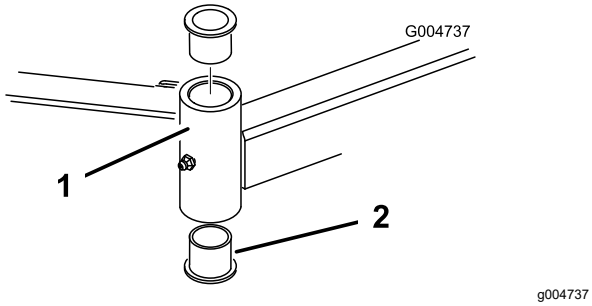

Figure 22

1. Castor arm tube
2. Bushings

5. Apply grease to the inside and outside of the new bushings. Use a hammer and flat plate to drive the bushings into the mounting tube.
6. Inspect the castor spindle for wear and replace it if damaged.
7. Push the castor spindle through the bushings and mounting tube, slide the thrust washer and spacer(s) onto the spindle, and install the tensioning cap on the castor spindle.

Servicing the Castor Wheels and Bearings

1. Park the machine on a level surface, lower the cutting unit, engage the parking brake, shut off the engine, and remove the key.
2. Remove the locknut from the bolt holding the castor wheel assembly between the castor fork (Figure 23). Grasp the castor wheel and slide the bolt out of the fork or pivot arm.
3. Remove the bearing from the wheel hub and allow the bearing spacer to fall out (Figure 23). Remove the bearing from the opposite side of the wheel hub.
4. Check the bearings, spacer, and inside of the wheel hub for wear. Replace any damaged parts.
5. To assemble the castor wheel, push the bearing into the wheel hub. When installing the bearings, press on the outer race of the bearing.

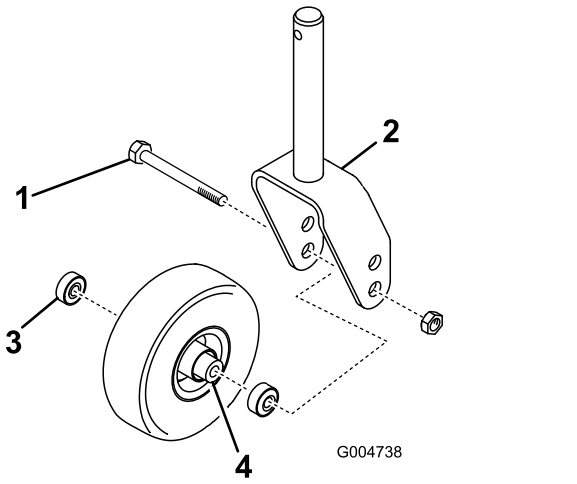

Figure 23

1. Castor wheel
2. Castor fork
3. Bearings
4. Bearing spacer

6. Slide the bearing spacer into the wheel hub. Push the other bearing into the open end of the wheel hub to captivate the bearing spacer inside the wheel hub.
7. Install the castor wheel assembly between the castor fork and secure it in place with the bolt and locknut.

Servicing the Cutting Blades

Blade Safety

A worn or damaged blade can break, and a piece of the blade could be thrown toward you or bystanders, resulting in serious personal injury or death.

- Inspect the blade periodically for wear or damage.
- Use care when checking the blades. Wrap the blades or wear gloves, and use caution when

servicing the blades. Only replace or sharpen the blades; never straighten or weld them.

- On multi-bladed machines, take care as rotating 1 blade can cause other blades to rotate.

Checking for a Bent Blade

After striking a foreign object, inspect the machine for damage and make repairs before starting and operating the equipment. Torque all of the spindle-pulley nuts to 176 to 203 N·m (130 to 150 ft-lb).

1. Park the machine on a level surface, raise the cutting unit to the TRANSPORT position, engage the parking brake, shut off the engine, and remove the key.
2. Raise the cutting unit to the SERVICE position; refer to your traction unit *Operator's Manual*.
3. Rotate the blade until the ends face forward and backward and measure from the inside of the cutting unit to the cutting edge at the front of the blade (Figure 24).

   Note: Remember this dimension.

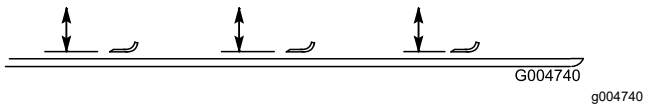

Figure 24

4. Rotate the opposite end of the blade forward and measure between the cutting unit and cutting edge of the blade at the same position as in step 3.

   Note: The difference between the dimensions obtained in steps 3 and 4 must not exceed 3 mm (1/8 inch). If the dimension exceeds 3 mm (1/8 inch), the blade is bent and must be replaced; refer to Removing and Installing the Cutting-Unit Blade(s) (page 19).

Removing and Installing the Cutting-Unit Blade(s)

Replace the blade if it hits a solid object, is out of balance, or is bent. Always use genuine Toro replacement blades to ensure safety and optimum performance.

1. Park the machine on a level surface, raise the cutting unit to the TRANSPORT position, engage the parking brake, shut off the engine, and remove the key.
2. Raise the cutting unit to the SERVICE position; refer to your traction unit *Operator's Manual*.
3. Grasp the end of the blade using a rag or thickly-padded glove.
4. Remove the blade bolt, anti-scalp cup, and blade from the spindle shaft (Figure 25).

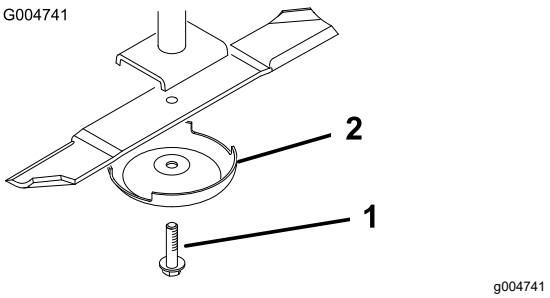

Figure 25

1. Blade bolt
2. Anti-scalp cup

5. Install the blade, anti-scalp cup, and blade bolt and tighten the blade bolt to 115 to 149 N·m (85 to 110 ft-lb).

   Important: **The curved part of the blade must be pointing toward the inside of the cutting unit to ensure proper cutting.**

   Note: After striking a foreign object, torque all spindle-pulley nuts to 115 to 149 N·m (85 to 110 ft-lb).

Inspecting and Sharpening the Cutting Unit Blade(s)

Both cutting edges and the sail, which is the turned-up portion opposite of the cutting edge, contribute to a good quality of cut.

Maintain sharp blades throughout the cutting season. Sharp blades create a clean cut without tearing or shredding the grass blades.

Check the blades for any wear or damage. The sail lifts the grass up straight, thereby producing an even cut and gradually wears down during operation.

1. Park the machine on a level surface, raise the cutting unit to the TRANSPORT position, engage the parking brake, shut off the engine, and remove the key.
2. Raise the cutting unit to the SERVICE position; refer to your traction unit *Operator's Manual*.
3. Examine the cutting ends of the blade carefully, especially where the flat and curved parts of the blade meet (Figure 26).

   Note: Because sand and abrasive material can wear away the metal that connects the flat and curved parts of the blade, check the blade before using the mower. If you notice wear (Figure 26), replace the blade.

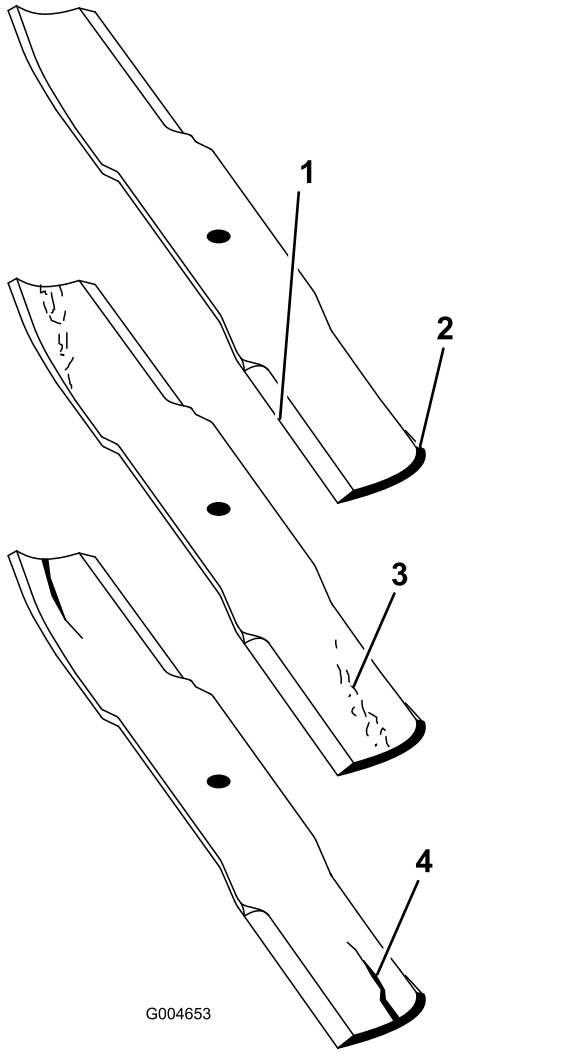

Figure 26

1. Cutting edge
2. Curved area
3. Wear/slot forming
4. Crack

4. Examine the cutting edges of all of the blades and sharpen the cutting edges if they are dull or nicked (Figure 27).

   Note: Sharpen only the top of the cutting edge and maintain the original cutting angle to ensure sharpness (Figure 27). The blade remains balanced if the same amount of metal is removed from both cutting edges.

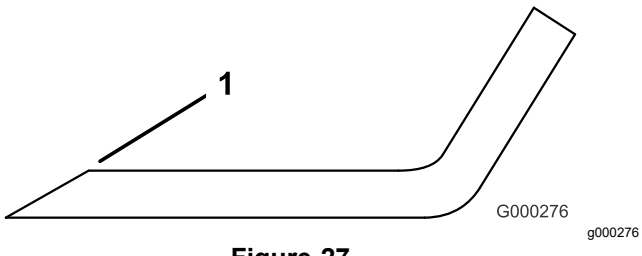

Figure 27

1. Sharpen at the original angle.

Note: Remove the blades and sharpen them on a grinder. After sharpening the cutting edges, install the blade with the anti-scalp cup and blade bolt; refer to Inspecting and Sharpening the Cutting Unit Blade(s) (page 19).

Checking and Correcting Mismatch of Blades

If there is mismatch between the blades, the grass will appear streaked when it is cut. This problem can be corrected by making sure that the blades are straight and all of the blades are cutting on the same plane.

1. Using a 1 m (3 ft) long carpenters level, find a level surface on the shop floor.
2. Raise the height-of-cut to the highest position; refer to Adjusting the Height of Cut (page 11).
3. Lower the cutting unit onto the flat surface. Remove the covers from the top of the cutting unit.
4. Rotate the blades until the ends face forward and backward. Measure from the floor to the front tip of the cutting edge. Remember this dimension. Then rotate the same blade so that the opposite end is forward, and measure again. The difference between the dimensions must not exceed 1m (3 ft). If the dimension exceeds 1m (3 ft), replace the blade because it is bent. Measure all of the blades.
5. Compare the measurements of the outer blades with the center blade. The center blade must not be more than 1m (3 ft) lower than the outer blades. If the center blade is more than 1m (3 ft) lower than the outer blades, proceed to step 6 and add shims between the spindle housing and the bottom of the cutting unit.
6. Remove the bolts, flat washers, lock washers, and nuts from the outer spindle in the area where the shims must be added. To raise or lower the blade, add a shim, Part No. 3256-24, between the spindle housing and the bottom of the cutting unit. Continue to check the alignment of the blades and add shims until the tips of the blades are within the required dimension.

   Important: **Do not use more than 3 shims at any 1 hole location. Use decreasing numbers of shims in adjacent holes if more than 1 shim is added to any 1 hole location.**
7. Install the belt covers.

Replacing the Drive Belt

The blade drive belt, tensioned by the spring-loaded idler pulley, is very durable. However, after many hours of use, the belt will show signs of wear. Signs of a worn belt are squealing when belt is rotating, blades slipping when cutting grass, frayed edges, burn marks, and cracks. Replace the belt if any of these conditions occur.

1. Park the machine on a level surface, lower the cutting unit, engage the parking brake, shut off the engine, and remove the key.
2. Remove the belt covers from the top of the cutting unit and set the covers aside.
3. Using a torque wrench or similar tool, move the idler pulley (Figure 28) away from the drive belt to release the belt tension and allow the belt to be slipped off the gearbox pulley.

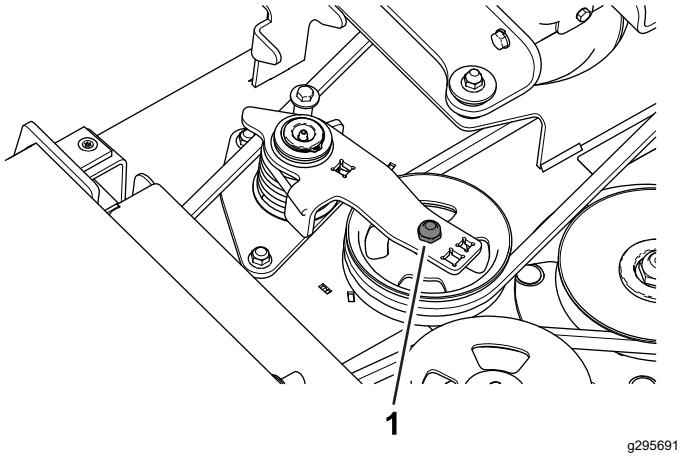

Figure 28

1. Idler pulley

4. Remove the old belt from around the spindle pulleys and idler pulley.
5. Using a torque wrench or similar tool to hold the idler pulley, route the new belt around the spindle pulleys and idler-pulley assembly as shown in Figure 29.

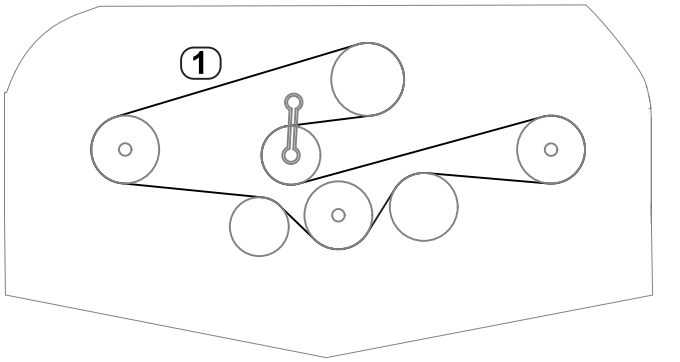

Figure 29

1. Belt routing

6. Install the belt covers.

Cleaning Under the Cutting Unit

Service Interval: Before each use or daily

Remove the grass buildup under the cutting unit daily.

1. Park the machine on a level surface, raise the cutting unit to the TRANSPORT position, engage the parking brake, shut off the engine, and remove the key.
2. Raise the cutting unit to the SERVICE position; refer to your traction unit *Operator's Manual*.
3. Thoroughly clean the underside of the cutting unit with water.

Storage

1. Disengage the PTO, release the traction pedal to the neutral position, and engage the parking brake.
2. Shut off the engine, remove the key, and wait for all moving parts to stop before leaving the operator's position.
3. Allow the engine to cool before adjusting, cleaning, storing, or repairing the machine.
4. Thoroughly clean the cutting unit, paying special attention to these areas:
   - Underneath the cutting unit
   - Under the cutting unit belt covers
   - PTO shaft assembly
   - All grease fittings and pivot points
5. Remove, sharpen, and balance the cutting unit blades. Install the blades and torque the blade fasteners to 85 to 110 ft-lb (115 to 149 N·m).
6. Check all fasteners for looseness and tighten them as necessary.
7. Grease or oil all grease fittings and pivot points. Wipe off any excess lubricant.
8. Lightly sand and use touch up paint on painted areas that are scratched, chipped or rusted. Repair any dents.

Notes:

Notes:

Declaration of Incorporation

The Toro Company, 8111 Lyndale Ave. South, Bloomington, MN, USA declares that the following unit(s) conform(s) to the directives listed, when installed in accordance with the accompanying instructions onto certain Toro models as indicated on the relevant Declarations of Conformity.

Model No.	Serial No.	Product Description	Invoice Description	General Description	Directive
31971 with 31959	400000000 and Up	60in Rear Discharge Mower	60" RD DECK, GM	60in Rear Discharge Mower	2006/42/EC, 2000/14/EC
31973 with 31960	400000000 and Up	72in Rear Discharge Mower	72" RD DECK, GM	72in Rear Discharge Mower	2006/42/EC, 2000/14/EC

Relevant technical documentation has been compiled as required per Part B of Annex VII of 2006/42/EC.

We will undertake to transmit, in response to requests by national authorities, relevant information on this partly completed machinery. The method of transmission shall be electronic transmittal.

This machinery shall not be put into service until incorporated into approved Toro models as indicated on the associated Declaration of Conformity and in accordance with all instructions, whereby it can be declared in conformity with all relevant Directives.

Certified:



John Heckel
Engineering Director
8111 Lyndale Ave. South
Bloomington, MN 55420, USA
June 4, 2020

Authorized Representative:

Marcel Dutrieux
Manager European Product Integrity
Toro Europe NV
Nijverheidsstraat 5
2260 Oevel
Belgium

California Proposition 65 Warning Information

What is this warning?

You may see a product for sale that has a warning label like the following:



WARNING: Cancer and Reproductive Harm—www.p65Warnings.ca.gov.

What is Prop 65?

Prop 65 applies to any company operating in California, selling products in California, or manufacturing products that may be sold in or brought into California. It mandates that the Governor of California maintain and publish a list of chemicals known to cause cancer, birth defects, and/or other reproductive harm. The list, which is updated annually, includes hundreds of chemicals found in many everyday items. The purpose of Prop 65 is to inform the public about exposure to these chemicals.

Prop 65 does not ban the sale of products containing these chemicals but instead requires warnings on any product, product packaging, or literature with the product. Moreover, a Prop 65 warning does not mean that a product is in violation of any product safety standards or requirements. In fact, the California government has clarified that a Prop 65 warning "is not the same as a regulatory decision that a product is 'safe' or 'unsafe.'" Many of these chemicals have been used in everyday products for years without documented harm. For more information, go to https://oag.ca.gov/prop65/faqs-view-all.

A Prop 65 warning means that a company has either (1) evaluated the exposure and has concluded that it exceeds the "no significant risk level"; or (2) has chosen to provide a warning based on its understanding about the presence of a listed chemical without attempting to evaluate the exposure.

Does this law apply everywhere?

Prop 65 warnings are required under California law only. These warnings are seen throughout California in a wide range of settings, including but not limited to restaurants, grocery stores, hotels, schools, and hospitals, and on a wide variety of products. Additionally, some online and mail order retailers provide Prop 65 warnings on their websites or in catalogs.

How do the California warnings compare to federal limits?

Prop 65 standards are often more stringent than federal and international standards. There are various substances that require a Prop 65 warning at levels that are far lower than federal action limits. For example, the Prop 65 standard for warnings for lead is 0.5 µg/day, which is well below the federal and international standards.

Why don't all similar products carry the warning?

- Products sold in California require Prop 65 labelling while similar products sold elsewhere do not.
- A company involved in a Prop 65 lawsuit reaching a settlement may be required to use Prop 65 warnings for its products, but other companies making similar products may have no such requirement.
- The enforcement of Prop 65 is inconsistent.
- Companies may elect not to provide warnings because they conclude that they are not required to do so under Prop 65; a lack of warnings for a product does not mean that the product is free of listed chemicals at similar levels.

Why does Toro include this warning?

Toro has chosen to provide consumers with as much information as possible so that they can make informed decisions about the products they buy and use. Toro provides warnings in certain cases based on its knowledge of the presence of one or more listed chemicals without evaluating the level of exposure, as not all the listed chemicals provide exposure limit requirements. While the exposure from Toro products may be negligible or well within the "no significant risk" range, out of an abundance of caution, Toro has elected to provide the Prop 65 warnings. Moreover, if Toro does not provide these warnings, it could be sued by the State of California or by private parties seeking to enforce Prop 65 and subject to substantial penalties.

EEA/UK Privacy Notice

Toro's Use of Your Personal Information

The Toro Company ("Toro") respects your privacy. When you purchase our products, we may collect certain personal information about you, either directly from you or through your local Toro company or dealer. Toro uses this information to fulfil contractual obligations - such as to register your warranty, process your warranty claim or to contact you in the event of a product recall - and for legitimate business purposes - such as to gauge customer satisfaction, improve our products or provide you with product information which may be of interest. Toro may share your information with our subsidiaries, affiliates, dealers or other business partners in connection these activities. We may also disclose personal information when required by law or in connection with the sale, purchase or merger of a business. We will never sell your personal information to any other company for marketing purposes.

Retention of your Personal Information

Toro will keep your personal information as long as it is relevant for the above purposes and in accordance with legal requirements. For more information about applicable retention periods please contact legal@toro.com.

Toro's Commitment to Security

Your personal information may be processed in the US or another country which may have less strict data protection laws than your country of residence. Whenever we transfer your information outside of your country of residence, we will take legally required steps to ensure that appropriate safeguards are in place to protect your information and to make sure it is treated securely.

Access and Correction

You may have the right to correct or review your personal data, or object to or restrict the processing of your data. To do so, please contact us by email at legal@toro.com. If you have concerns about the way in which Toro has handled your information, we encourage you to raise this directly with us. Please note that European residents have the right to complain to your Data Protection Authority.

The Toro Warranty

Two-Year or 1,500 Hours Limited Warranty

Conditions and Products Covered

The Toro Company and its affiliate, Toro Warranty Company, pursuant to an agreement between them, jointly warrant your Toro Commercial product ("Product") to be free from defects in materials or workmanship for 2 years or 1,500 operational hours*, whichever occurs first. This warranty is applicable to all products with the exception of Aerators (refer to separate warranty statements for these products). Where a warrantable condition exists, we will repair the Product at no cost to you including diagnostics, labor, parts, and transportation. This warranty begins on the date the Product is delivered to the original retail purchaser.
* Product equipped with an hour meter.

Instructions for Obtaining Warranty Service

You are responsible for notifying the Commercial Products Distributor or Authorized Commercial Products Dealer from whom you purchased the Product as soon as you believe a warrantable condition exists. If you need help locating a Commercial Products Distributor or Authorized Dealer, or if you have questions regarding your warranty rights or responsibilities, you may contact us at:

Toro Commercial Products Service Department
Toro Warranty Company
8111 Lyndale Avenue South
Bloomington, MN 55420-1196

952–888–8801 or 800–952–2740
E-mail: commercial.warranty@toro.com

Owner Responsibilities

As the product owner, you are responsible for required maintenance and adjustments stated in your *Operator's Manual*. Repairs for product issues caused by failure to perform required maintenance and adjustments are not covered under this warranty.

Items and Conditions Not Covered

Not all product failures or malfunctions that occur during the warranty period are defects in materials or workmanship. This warranty does not cover the following:

- Product failures which result from the use of non-Toro replacement parts, or from installation and use of add-on, or modified non-Toro branded accessories and products.
- Product failures which result from failure to perform recommended maintenance and/or adjustments.
- Product failures which result from operating the Product in an abusive, negligent, or reckless manner.
- Parts consumed through use that are not defective. Examples of parts which are consumed, or used up, during normal Product operation include, but are not limited to, brake pads and linings, clutch linings, blades, reels, rollers and bearings (sealed or greasable), bed knives, spark plugs, castor wheels and bearings, tires, filters, belts, and certain sprayer components such as diaphragms, nozzles, and check valves.
- Failures caused by outside influence, including, but not limited to, weather, storage practices, contamination, use of unapproved fuels, coolants, lubricants, additives, fertilizers, water, or chemicals.
- Failure or performance issues due to the use of fuels (e.g. gasoline, diesel, or biodiesel) that do not conform to their respective industry standards.
- Normal noise, vibration, wear and tear, and deterioration. Normal "wear and tear" includes, but is not limited to, damage to seats due to wear or abrasion, worn painted surfaces, scratched decals or windows.

Parts

Parts scheduled for replacement as required maintenance are warranted for the period of time up to the scheduled replacement time for that part. Parts replaced under this warranty are covered for the duration of the original product warranty and become the property of Toro. Toro will make the final decision whether to repair any existing part or assembly or replace it. Toro may use remanufactured parts for warranty repairs.

Deep Cycle and Lithium-Ion Battery Warranty

Deep cycle and Lithium-Ion batteries have a specified total number of kilowatt-hours they can deliver during their lifetime. Operating, recharging, and maintenance techniques can extend or reduce total battery life. As the batteries in this product are consumed, the amount of useful work between charging intervals will slowly decrease until the battery is completely worn out. Replacement of worn out batteries, due to normal consumption, is the responsibility of the product owner. Note: (Lithium-Ion battery only): Pro-rated after 2 years. Refer to the battery warranty for additional information.

Lifetime Crankshaft Warranty (ProStripe 02657 Model Only)

The Prostripe which is fitted with a genuine Toro Friction Disc and Crank-Safe Blade Brake Clutch (integrated Blade Brake Clutch (BBC) + Friction Disc assembly) as original equipment and used by the original purchaser in accordance with recommended operating and maintenance procedures, are covered by a Lifetime Warranty against engine crankshaft bending. Machines fitted with friction washers, Blade Brake Clutch (BBC) units and other such devices are not covered by the Lifetime Crankshaft Warranty.

Maintenance is at Owner's Expense

Engine tune-up, lubrication, cleaning and polishing, replacement of filters, coolant, and completing recommended maintenance are some of the normal services Toro products require that are at the owner's expense.

General Conditions

Repair by an Authorized Toro Distributor or Dealer is your sole remedy under this warranty.

Neither The Toro Company nor Toro Warranty Company is liable for indirect, incidental or consequential damages in connection with the use of the Toro Products covered by this warranty, including any cost or expense of providing substitute equipment or service during reasonable periods of malfunction or non-use pending completion of repairs under this warranty. Except for the Emissions warranty referenced below, if applicable, there is no other express warranty. All implied warranties of merchantability and fitness for use are limited to the duration of this express warranty.

Some states do not allow exclusions of incidental or consequential damages, or limitations on how long an implied warranty lasts, so the above exclusions and limitations may not apply to you. This warranty gives you specific legal rights, and you may also have other rights which vary from state to state.

Note Regarding Emissions Warranty

The Emissions Control System on your Product may be covered by a separate warranty meeting requirements established by the U.S. Environmental Protection Agency (EPA) and/or the California Air Resources Board (CARB). The hour limitations set forth above do not apply to the Emissions Control System Warranty. Refer to the Engine Emission Control Warranty Statement supplied with your product or contained in the engine manufacturer's documentation.

Countries Other than the United States or Canada

Customers who have purchased Toro products exported from the United States or Canada should contact their Toro Distributor (Dealer) to obtain guarantee policies for your country, province, or state. If for any reason you are dissatisfied with your Distributor's service or have difficulty obtaining guarantee information, contact your Authorized Toro Service Center.