Form No. 3408-432 Rev B

TORO®

Count on it.

Parts Catalog

55cm Recycler®

Lawn Mower with SmartStow®

Model No. 20961—Serial No. 400000000 and Up

Register at www.Toro.com.
Original Instructions (EN)

CE

3408-432 B

Ordering Replacement Parts

To order replacement parts, please supply the part number, the quantity, and the description of each part desired.

Understanding Reference Numbers

Each identified part in an illustration has a reference number. The reference number for a part also appears in the parts list, along with other information about the part.

This catalog uses two special reference number formats, one to indicate parts in a service assembly and another to indicate the quantity of a given part in an illustration.

Service Assembly Reference Numbers

Parts in service assemblies have reference numbers in the form a:b. The a represents the reference number of the entire service assembly and the b represents a sequential number unique to each part within the service assembly.

For example, a wheel assembly might be identified by reference number 6, the tire by 6:1, the valve by 6:2, and the wheel by 6:3. When you order the assembly identified by reference number 6, you receive all parts identified by reference numbers 6:1,6:2, and 6:3. However, you may also order any part individually. Reference numbers of this type appear in illustration and in parts lists.

Reference Numbers Indicating Quantity

In an illustration, if a reference number indicates more than one part, the reference number has the form nX y. The n represents the quantity of the part, the X is the multiplication symbol, and the y represents the reference number.

For example, in an illustration, the reference number 2X 37 means that two of the parts identified by reference number 37 are indicated.

Contents

Housing Assembly 4
Rear Bag Assembly 6
Engine and Blade Assembly 8
Front Wheel and Height-of-Cut Assembly 10
Rear Wheel and Height-of-Cut Assembly 12
Handle Assembly 14
Attachments and Accessories 16

© 2020—The Toro® Company
8111 Lyndale Avenue South
Bloomington, MN 55420

Contact us at www.Toro.com.
Printed in the USA.
All Rights Reserved

Housing Assembly

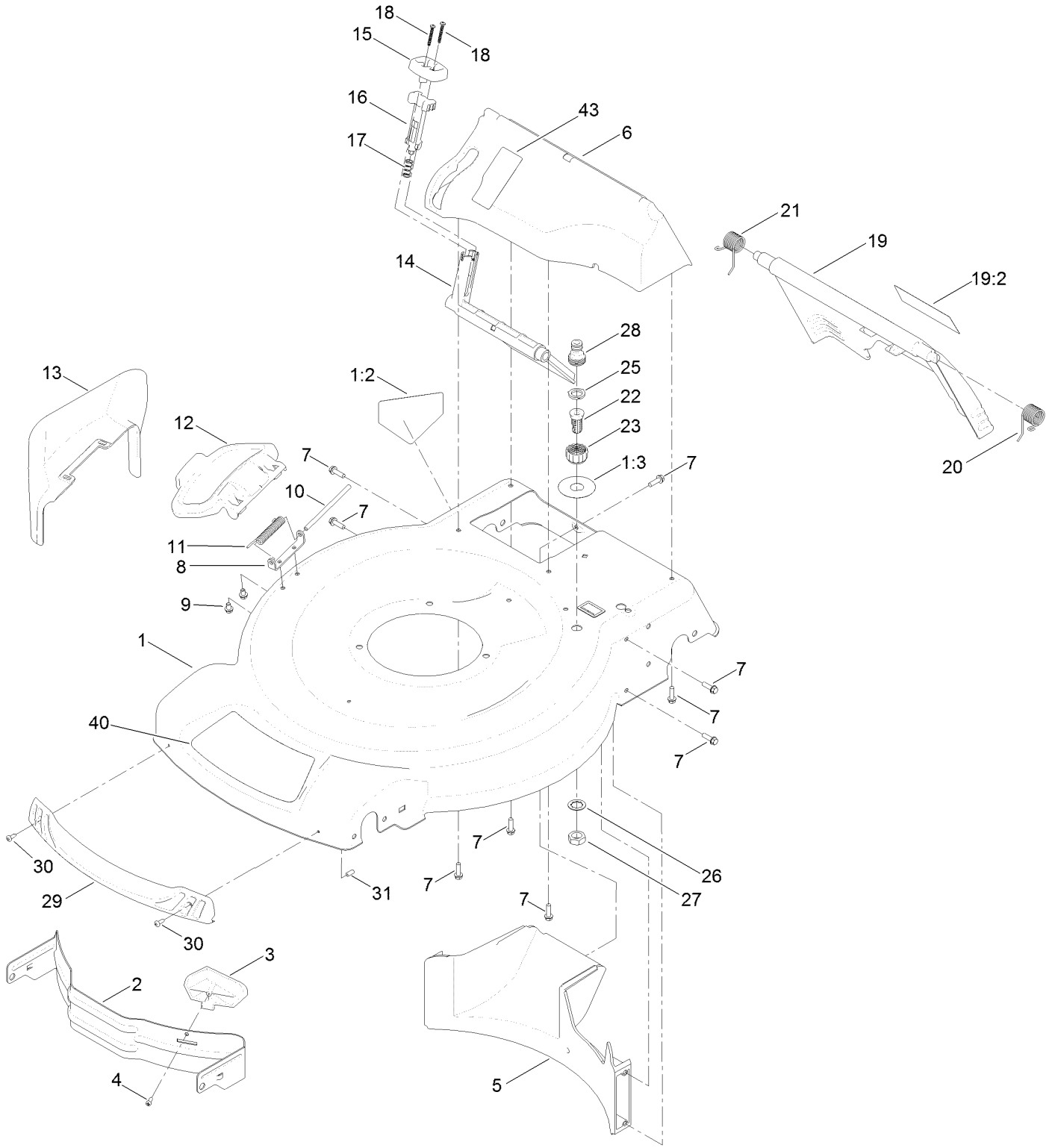

Housing Assembly (continued)

Ref.	Part Number	Qty.	Description
1	133-1946	1	Housing ASM
1:2	112-8760	1	Decal-Danger
1:3	112-8867	1	Decal-Port, Washout
2	115-4667-01	1	Baffle-Front
3	115-4672	1	Kicker-Front
4	32144-111	1	Screw-PPH
5	114-7961	1	Baffle-Rear
6	132-4501	1	Chute-Recycle
7	46-8091	9	Screw-HWH
8	112-6416	1	Bracket-Cover
9	99-8445	2	Screw-HWH
10	99-5291	1	Rod-Cover
11	99-5293	1	Spring-Torsion
12	115-8449	1	Deflector-Side
13	115-8447	1	Chute-Discharge, Side
14	114-7960	1	Deflector-Recycle
15	114-7958	1	Knob-Recycle
16	114-7959	1	Latch-Recycle
17	117-1031	1	Spring-Compression
18	32104-120	2	Screw-PPH
19	121-5776	1	Rear Door ASM
19:2	131-4514	1	Decal-Warning
20	115-2859	1	Spring-Torsion
21	114-7924	1	Spring-Torsion
22	112-6400	1	Port-Washout
23	112-6401	1	Coupling-Hose, Washout Port
25	112-6438	1	Washer-Seal, Washout Port
26	3254-5	1	Washer-Lock
27	3218-6	1	Nut-Jam
28	112-6437	1	Adapter-Connect, Quick
29	114-7987	1	Bumper
30	105-6849	2	Screw-Forming, Thread
31	130-6660	2	Cap-Plug
40	133-1948	1	Decal-Deck
43	125-5026	1	Decal

Rear Bag Assembly

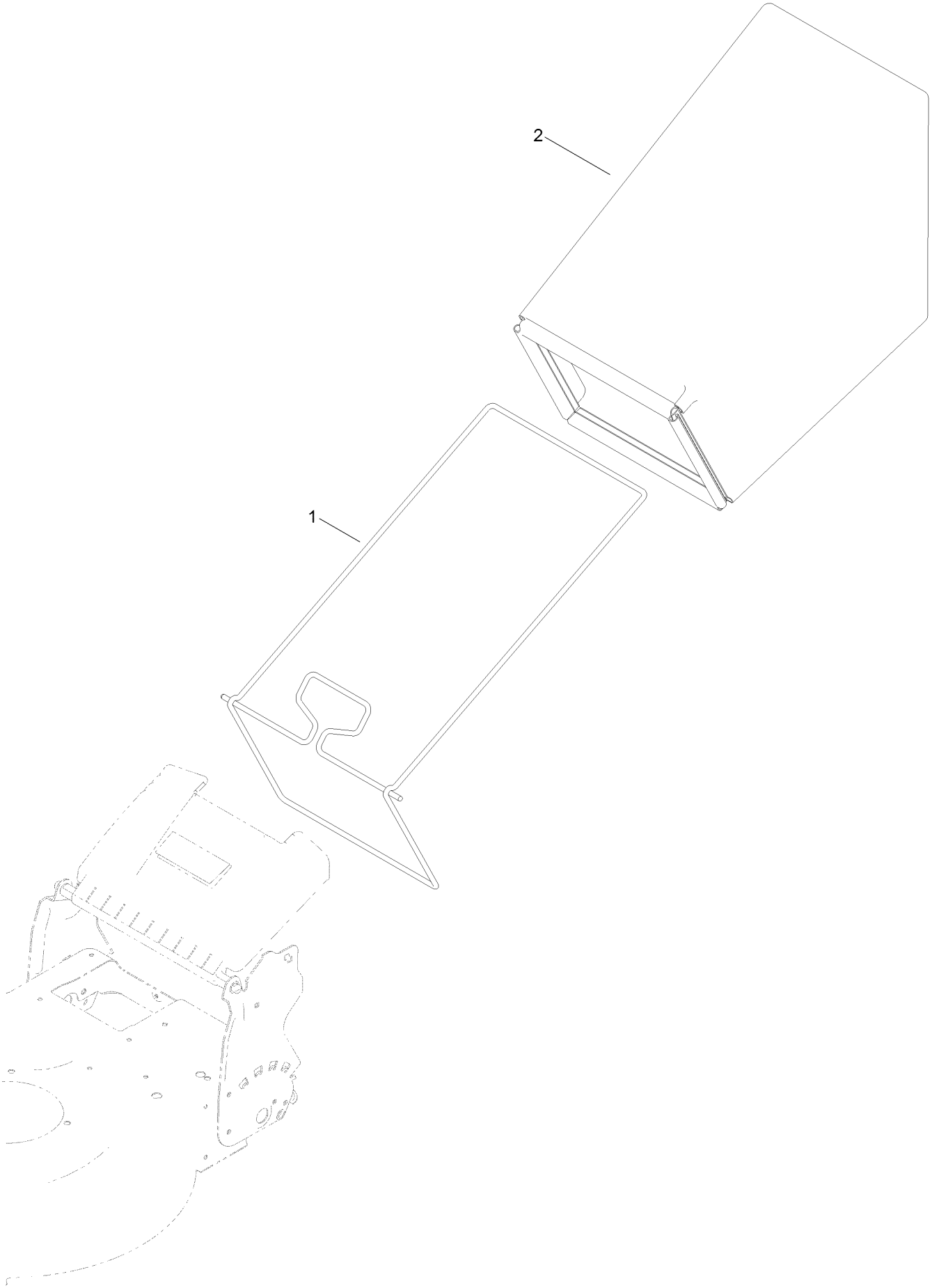

Rear Bag Assembly (continued)

Ref.	*Part Number*	*Qty.*	*Description*
1	132-4503-03	1	Frame-Bag
2	115-4673	1	Grass Bag ASM

Engine and Blade Assembly

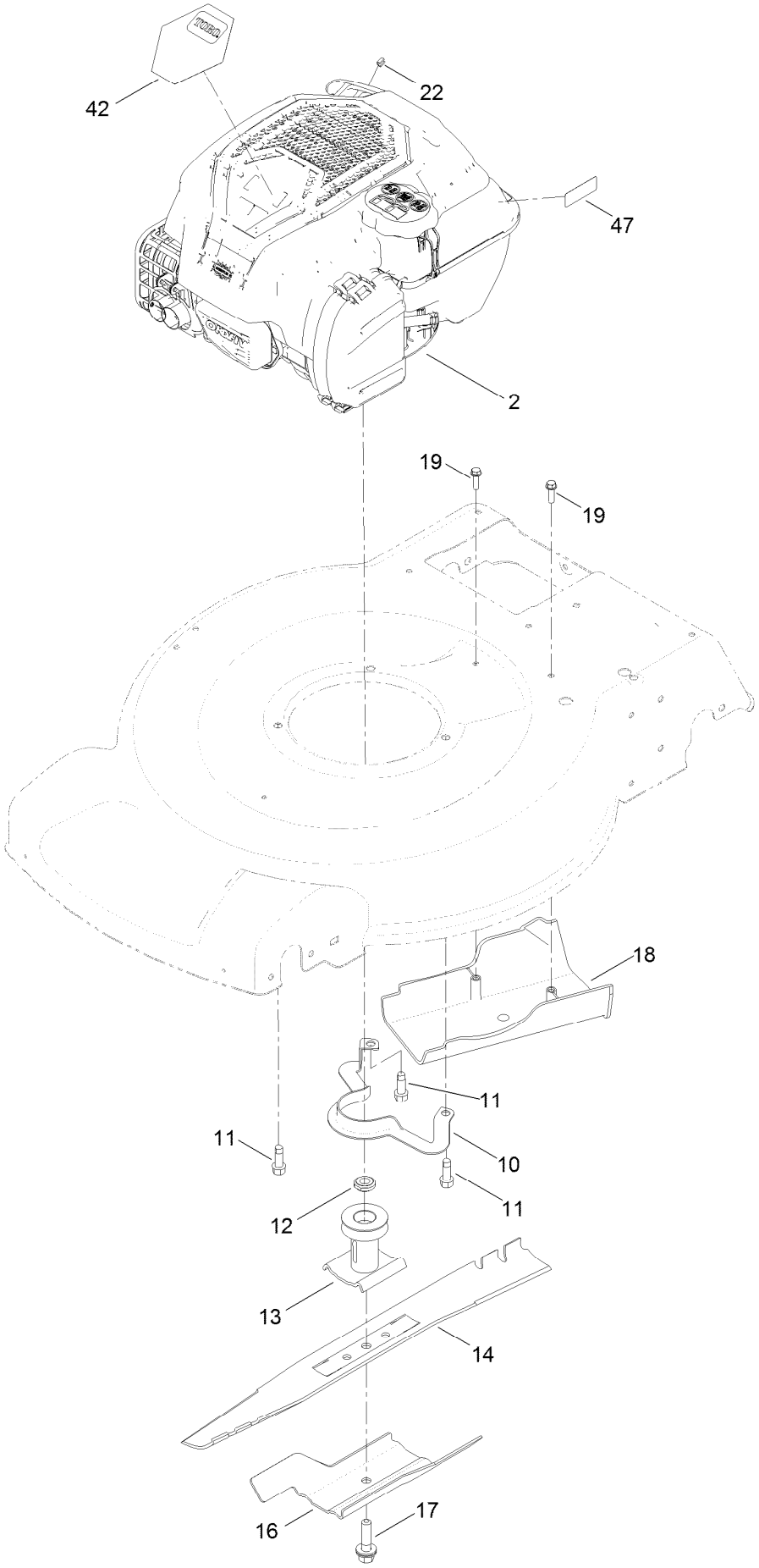

Engine and Blade Assembly (continued)

Ref.	Part Number	Qty.	Description
2		1	Engine-Briggs, 104M020130F1 ●■
10	105-3030-03	1	Guide-Belt
11	95-1726	3	Screw-Taptite
12	106-3999	1	Spacer-Driver
13	106-3987	1	Driver-Blade
14	131-9683-03	1	Blade
16	105-6848-03	1	Accelerator-Blade
17	125-2466	1	Bolt-Blade
18	114-7937	1	Cover-Belt
19	46-8091	2	Screw-HWH
22	2210-316	1	Stop-Rope
42	133-8176	1	Decal-Shroud
47	133-8198	1	Decal-Level, Fuel

● Not serviced separately

■ Obtain parts from www.briggsandstratton.com

Front Wheel and Height-of-Cut Assembly

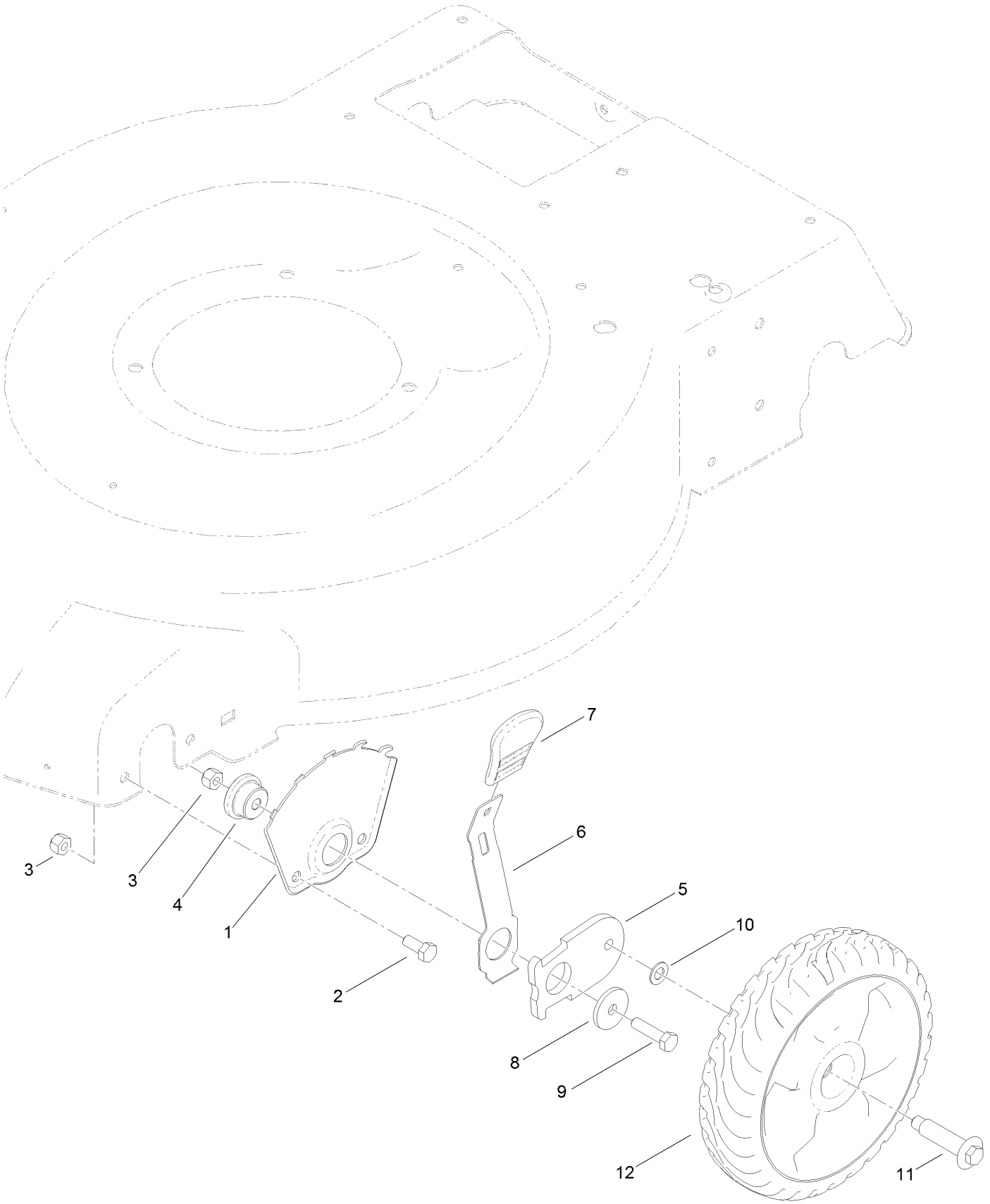

Front Wheel and Height-of-Cut Assembly (continued)

Ref.	Part Number	Qty.	Description
1	115-1956-03	2	Plate-HOC, Front
2	322-3	4	Screw-HH
3	3296-29	6	Nut-Lock, NI
4	105-1818	2	Bushing-Mount, HOC
5	105-1807	2	Arm-Pivot, Front
6	105-1809	2	Arm-Spring
7	110-0549	2	Knob-HOC
8	105-3048	2	Washer-Flat
9	322-6	2	Screw-HH
10	40-1940	2	Washer
11	614650	2	Bolt-Shoulder
12	115-2894	2	8 Inch Wheel ASM

Rear Wheel and Height-of-Cut Assembly

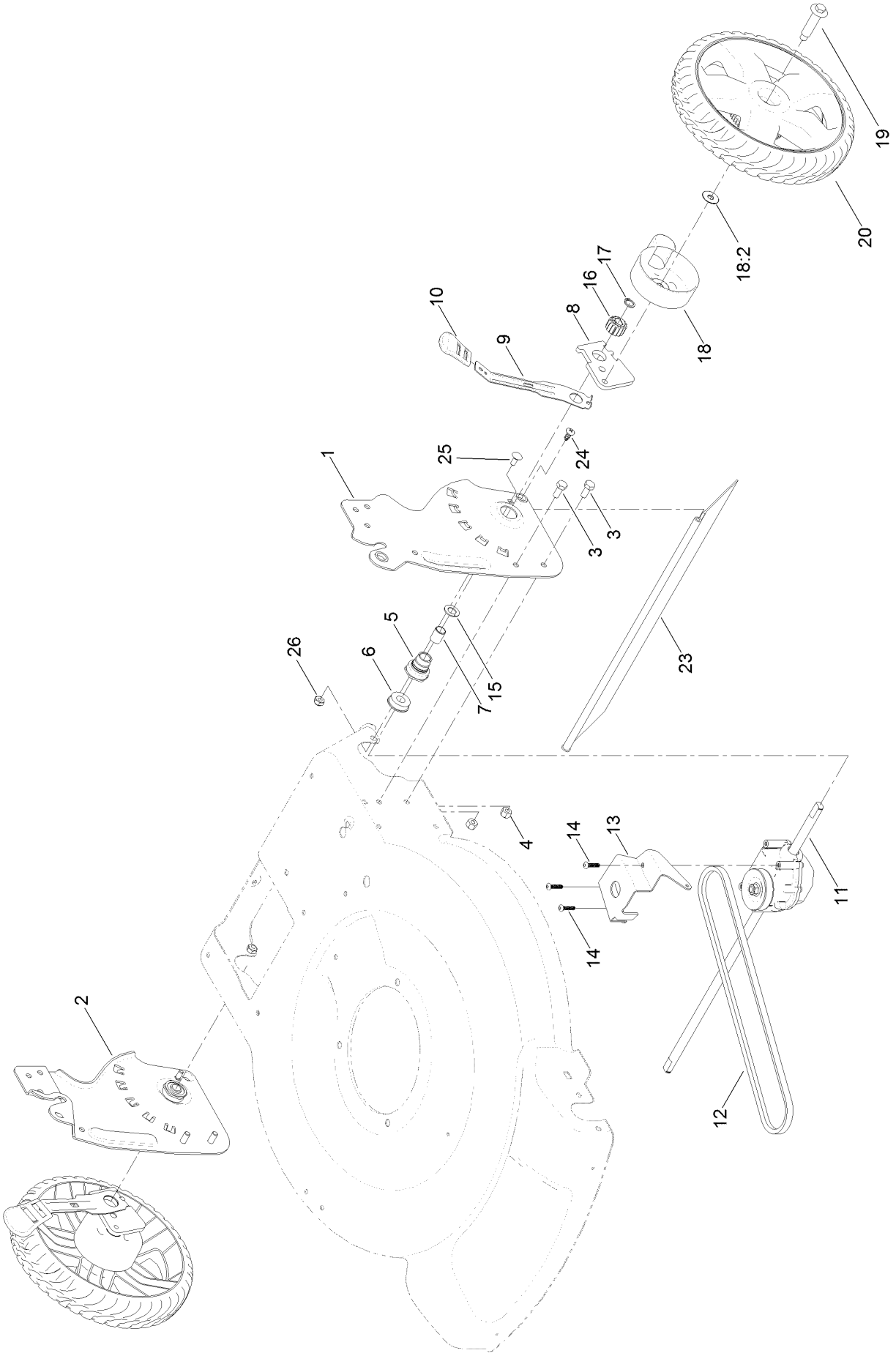

Rear Wheel and Height-of-Cut Assembly (continued)

Ref.	Part Number	Qty.	Description
1	136-5887-03	1	Plate-HOC, Rwd (LH)
2	136-5888-03	1	Plate-HOC, Rwd (RH)
3	322-3	4	Screw-HH
4	3296-29	4	Nut-Lock, NI
5	108-9779	2	Retainer-Bushing, HOC
6	104-8699	2	Bearing-Ball
7	108-9782	2	Bushing-Sleeve
8	132-4459	2	Arm-Pivot, Rear
9	132-4486	2	Arm-Spring
10	110-0549	2	Knob-HOC
11	131-9696	1	Transmission
12	91-2258	1	Belt-V
13	132-4481-01	1	Bracket-Transmission
14	108-7476	3	Screw-Plastite
15	110-7191	2	Washer-Thrust
16	131-5399	2	Gear-Pinion, 15T
17	32151-61	2	Ring-Retaining
18	132-4480	2	Cover-Gear
18:2	614426	1	Washer-Stepped
19	614650	2	Bolt-Shoulder
20	132-4458	2	11 Inch Wheel And Gear ASM
23	120-7012	1	Shield-Trailing
24	117-1092	2	Screw-PTH
25	3229-11	2	Screw-CARR
26	3296-16	2	Nut-Lock, NI

Handle Assembly

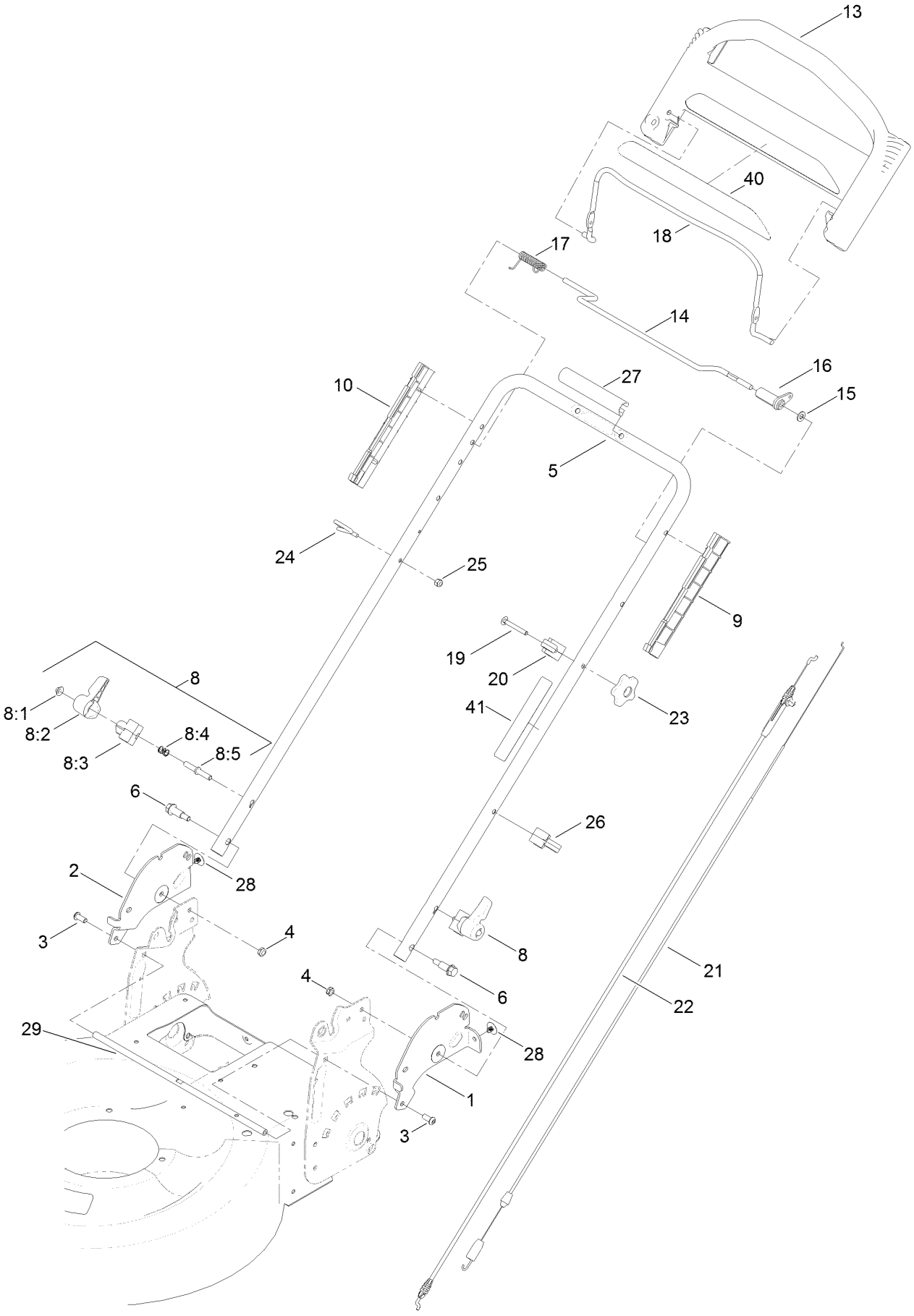

Handle Assembly (continued)

Ref.	Part Number	Qty.	Description
1	132-4453-03	1	Plate-Handle, LH
2	132-4454-03	1	Plate-Handle, RH
3	3274-55	2	Screw-HSBH
4	3296-47	2	Nut-Lock, NI
5	132-4471-05	1	Handle
6	130-2344	2	Bolt-Shoulder
8	115-2860	2	Quick Release ASM
8:1	109-0917	1	Nut-Push
8:2	114-7995	1	Lever
8:3	114-7996	1	Anchor-Spring
8:4	115-2858	1	Spring-Compression
8:5	114-2675	1	Rod-Release
9	105-6842	1	Guide-LH
10	105-6841	1	Guide-RH
13	104-8678	1	Handle-Control
14	99-1588	1	Bar-Control, Traction
15	3256-23	1	Washer-Plain
16	99-1589	1	Lever-Traction
17	121-9118	1	Spring-Torsion
18	131-0880-03	1	Bail-Brake
19	136-7081	1	Screw-CARR
20	136-5864	1	Anchor-Cable
21	115-8435	1	Cable-Traction
22	115-8437	1	Cable-Brake
23	131-0897	1	Knob-Handle, Locking
24	86-9671	1	Guide-Rope
25	3296-73	1	Nut-Lock, NI
26	114-7988	1	Guide-Cable
27	131-4551	1	Cover-Handle
28	130-6721	2	Clip-Tree
29	133-1980-03	1	Rod-Stiffener
40	133-1949	1	Decal
41	132-4470	1	Decal-Traction, Adjust

Attachments and Accessories

For 20961 55cm Recycler Lawn Mower with SmartStow

Product Name	Model/Part
Traction Assist Handle Kit	131-4590
Lawn Striping Kit with 22in Roller	20601
Lawnmower Cover	490-7462

Notes:

Notes:

Notes:



Count on it.