Form No. 3324-886

TORO®

Snow Commander™

Snowthrower

Model No. 38600—210000001 and Up
Model No. 38602—210000001 and Up

Operator's Manual

Contents

	Page
Introduction	2
Safety	3
General Snowthrower Safety	3
Toro Snowthrower Safety	4
Safety and Instruction Decals	5
Assembly	6
Loose Parts	6
Unfolding the Handle	6
Installing the Discharge Chute	6
Before Starting	7
Mixing Gasoline and Oil	7
Filling the Fuel Tank	8
Operation	9
Operating Controls	9
Starting the Engine	9
Stopping the Engine	9
Starting the Rotor Blades	9
Stopping the Rotor Blades	9
Starting the Traction Drive	10
Stopping the Traction Drive	10
Adjusting the Discharge Chute	10
Snowthrowing Tips	10
Maintenance	11
Recommended Maintenance Schedule	11
Adjusting the Rotor Control Cable	11
Adjusting the Traction Drive Cable	12
Replacing the Rotor Blades	13
Replacing the Scraper	14
Replacing the Spark Plug	15
Replacing the Drive Belt	16
Checking the Tire Pressure	17
Emptying the Fuel Tank	17
Storage	17
Preparing the Fuel System	17
Preparing the Engine	17
Preparing the Snowthrower	17
Troubleshooting	18
The Toro Starting Guarantee	20
Federal Emission Control Warranty Statement	22
The Toro Total Coverage Guarantee	24

Warning

The engine exhaust from this product contains chemicals known to the State of California to cause cancer, birth defects, or other reproductive harm.

Introduction

Read this manual carefully to learn how to operate and maintain your product properly. The information in this manual can help you and others avoid injury and product damage. Although Toro designs and produces safe products, you are responsible for operating the product properly and safely.

Whenever you need service, genuine Toro parts, or additional information, contact an Authorized Service Dealer or Toro Customer Service and have the model and serial numbers of your product ready. Figure 1 illustrates the location of the model and serial numbers on the product.

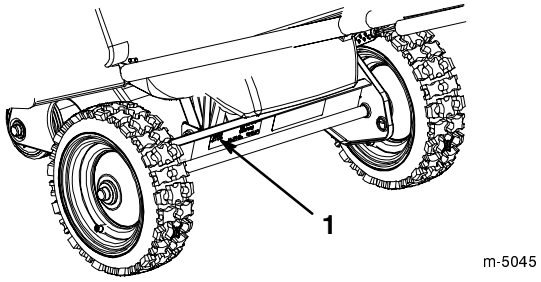

Figure 1

1. Location of the model and serial numbers

Write the product model and serial numbers in the space below:

Model No. _____

Serial No. _____

This manual identifies potential hazards and has special safety messages that help you and others avoid personal injury and even death. ***Danger***, ***Warning***, and ***Caution*** are words used to identify the level of hazard.

Danger signals an extreme hazard that *will* cause serious injury or death if you do not follow the recommended precautions.

© 2000 by The Toro Company
8111 Lyndale Avenue South
Bloomington, MN 55420-1196

All Rights Reserved
Printed in the USA

Warning signals a hazard that *may* cause serious injury or death if you do not follow the recommended precautions.

Caution signals a hazard that may cause minor or moderate injury if you do not follow the recommended precautions.

This manual uses two other words to highlight information. **Important** calls attention to special mechanical information and **Note:** emphasizes general information worthy of special attention.

Safety

Improperly using or maintaining this snowthrower can result in injury. To reduce the potential for injury, comply with these safety instructions.

Toro designed and tested this snowthrower to offer reasonably safe service; however, *failure to comply with the following instructions may result in personal injury.*

To ensure maximum safety, best performance, and to gain knowledge of the product, it is essential that you and any other operator of the snowthrower read and understand the contents of this manual before the engine is ever started. Pay particular attention to the safety alert symbol ⚠ which means *caution*, *warning*, or *danger* — "personal safety instruction." Read and understand the instruction because it has to do with safety. Failure to comply with the instruction may result in personal injury.

General Snowthrower Safety

The following instructions have been adapted from the ANSI/OPEI standard B71.3 and ISO standard 8437 in effect at the time of production. Information or terminology specific to Toro snowthrowers is enclosed in parenthesis.

Training

- Read this operator's manual carefully. Be thoroughly familiar with the controls and the proper use of the snowthrower before starting it. Know how to stop the snowthrower and disengage the controls quickly.
- Never allow children or people unfamiliar with these instructions to operate the snowthrower.
- Keep the area of operation clear of all persons (particularly small children) and pets.
- Exercise caution to avoid slipping or falling.

Preparation

- Thoroughly inspect the area where you will use the snowthrower, and remove all doormats, sleds, boards, wires, and other foreign objects.
- Do not operate the snowthrower without wearing adequate winter garments. Wear footwear that will improve footing on slippery surfaces.
- Handle fuel with care; it is highly flammable.
  - Use an approved fuel container.
  - Never add fuel to a running or hot engine.
  - Fill the fuel tank outdoors with extreme care. Never fill the fuel tank indoors.
  - Replace the gasoline cap securely and wipe up any spilled fuel.
- Use only the power cord supplied with the snowthrower and a receptacle appropriate for use with the cord for electric-start motors.
- Disengage all clutches and shift the snowthrower into neutral before starting the engine.
- Never attempt to make any adjustments while the engine is running, except where specifically recommended by Toro.
- Let the engine and the snowthrower adjust to the outdoor temperature before clearing the snow.

Operation

- Operating any powered machine can result in foreign objects being thrown into the eyes. Always wear safety glasses or eye shields during operation or while performing an adjustment or repair.
- Do not put hands or feet near or under rotating parts. Keep clear of the discharge opening at all times.
- Exercise extreme caution when crossing gravel drives, walks, or roads. Stay alert for hidden hazards or traffic.
- After striking a foreign object, stop the engine, disconnect the wire from the spark plug, and thoroughly inspect the snowthrower for any damage. Repair any damage before starting and operating the snowthrower.
- If the snowthrower begins to vibrate abnormally, stop the engine and check immediately for the cause. Vibration is generally a warning of trouble.
- Stop the engine whenever you leave the operating position; before unclogging the rotor blade housing or the discharge chute; and when making any repairs, adjustments, or inspections.

- Do not run the engine indoors, except when starting it and when moving the snowthrower in or out of the building. Open the outside doors; exhaust fumes are dangerous.
- Do not clear snow across the face of slopes. Exercise extreme caution when changing direction on slopes. Do not attempt to clear steep slopes.
- Never operate the snowthrower without proper guards, plates, or other safety protective devices in place.
- Never operate the snowthrower near glass enclosures, automobiles, window wells, drop-offs, etc. without properly adjusting the snow discharge angle. Keep children and pets away.
- Do not overload the snowthrower capacity by attempting to clear snow at too fast a rate.
- Never operate the snowthrower at high transport speeds on slippery surfaces. Look behind and use care when moving in reverse.
- Never direct the discharge at bystanders or allow anyone in front of the snowthrower.
- Disengage the power to the rotor blades when the snowthrower is in transport or is not in use.
- Use only attachments and accessories approved by Toro, such as wheel weights, counterweights, cabs, etc. (Contact an Authorized Service Dealer for accessories available for your snowthrower.)
- Never operate the snowthrower without good visibility or light. Always be sure of your footing, and keep a firm hold on the handles. Walk; never run.
- Run the snowthrower a few minutes after throwing snow to prevent the rotor blades from freezing up. Stop the engine, wait for all moving parts to stop, and pull the recoil starter handle several times to prevent it from freezing up.

Maintenance and storage

- When cleaning, repairing, or inspecting the snowthrower, make certain that the rotor blades and all moving parts have stopped. Disconnect the wire from the spark plug, and keep it away from the plug to prevent someone from accidentally starting the engine.
- Never store the snowthrower with fuel in the fuel tank inside a building where ignition sources are present, such as hot water and space heaters, clothes dryers, etc. Allow the engine to cool before storing in any enclosure.
- Check all fasteners at frequent intervals for proper tightness to be sure that the snowthrower is in safe working condition.
- Always refer to this operator's manual for important information if you store the snowthrower for an extended period.
- Maintain or replace safety and instruction decals when necessary.

Toro Snowthrower Safety

The following list contains safety information specific to Toro products or other safety information that you must know that is not included in the ANSI or ISO standards.

- *Rotating rotor blades can cut off or injure fingers or hands.* Stay behind the handles and away from the discharge opening while operating the snowthrower (except when you adjust the discharge chute). *Keep your face, hands, feet, and any other part of your body or clothing away from concealed, moving, or rotating parts.*
- Before adjusting, cleaning, repairing, and inspecting the snowthrower, and before unclogging the discharge chute, *stop the engine, remove the key, and wait for all moving parts to stop.* Also, disconnect the wire from the spark plug and keep it away from the plug to prevent someone from accidentally starting the engine.
- Use a stick, *not your hands*, to remove obstructions from the discharge chute.
- *Before* leaving the operating position, stop the engine, remove the key, and wait for all moving parts to stop.
- Do not wear loose-fitting clothing that can get caught in moving parts.
- If a shield, safety device, or decal is damaged, illegible, or lost, repair or replace it before operating the snowthrower.
- *Do not* smoke while handling gasoline.
- *Do not* use the snowthrower on a roof.
- Do not touch the engine while it is running or soon after it has stopped because it can be hot enough to cause a burn.
- Perform only those maintenance instructions described in this manual. Before performing any maintenance, service, or adjustment, stop the engine, remove the key, and disconnect the wire from the spark plug, keeping it away from the plug to prevent someone from accidentally starting the engine. If major repairs are ever needed, contact an Authorized Service Dealer.
- Do not change the speed settings on the engine.
- When storing the snowthrower for more than 30 days, remove the gasoline from the fuel tank to prevent a potential hazard. Store gasoline in an approved fuel container. Remove the key from the ignition switch before storing the snowthrower.

- To ensure the best performance and safety, purchase only genuine Toro replacement parts and accessories.

Safety and Instruction Decals

Safety and instruction decals are easily visible to the operator and are located near any area of potential danger. Replace any decal that is damaged or lost.

Replace Control Panel for Model 38600
(Part No. 104-4106)



Replace Control Panel for Model 38602
(Part No. 104-0863)



Replace Carburetor Cover
(Part No. 104-0874)



By Muffler
(Part No. 104-2767)



On Inside of Belt Cover
(Part No. 104-4125)

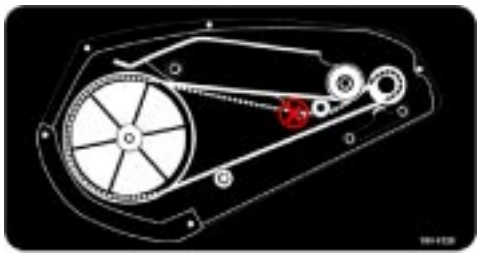

On Chute
(Part No. 104-4135)



On Handle
(Part No. 104-2775)



On Housing for Model 38602
(Part No. 61-4790)



Assembly

Note: Determine the left and right sides of the machine from the normal operating position.

Loose Parts

DESCRIPTION	QTY.	USE
Bolts	3	Installing the discharge chute
Locknuts	3	
Washers	3	
Discharge chute	1	

Unfolding the Handle

1. Cut the tie that secures the rotor control cable (Fig. 2) to the handle.

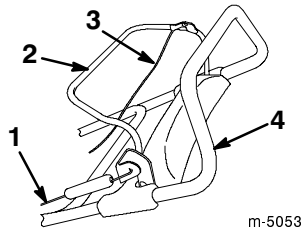

Figure 2

1. Rotor control cable
2. Control bar
3. Traction drive cable
4. Handle

2. Loosen the knobs and pull out the handle locks until the upper handle rotates freely (Fig. 3).

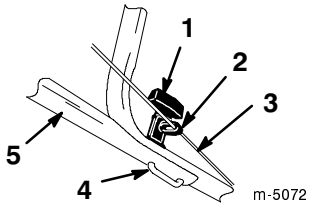

Figure 3

1. Knob (2)
2. Cable guide
3. Traction drive cable
4. Handle lock (2)
5. Upper handle (right side)

3. Position the upper handle as shown in Figure 4.

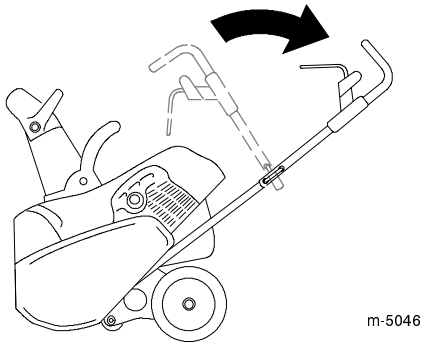

Figure 4

4. Fully insert the handle locks (Fig. 3).
5. Ensure that the cable guide is in position as shown in Figure 3.
6. Tighten the knobs until they are snug.
7. Ensure that the rotor control cable and the traction drive cable are properly adjusted (Fig. 2). Refer to *Adjusting the Rotor Control Cable* on page 11, and to *Adjusting the Traction Drive Cable* on page 12.

Installing the Discharge Chute

1. Place the discharge chute over the chute ring, and align the hole in the back of the discharge chute with the center hole in the chute ring (Fig. 5).

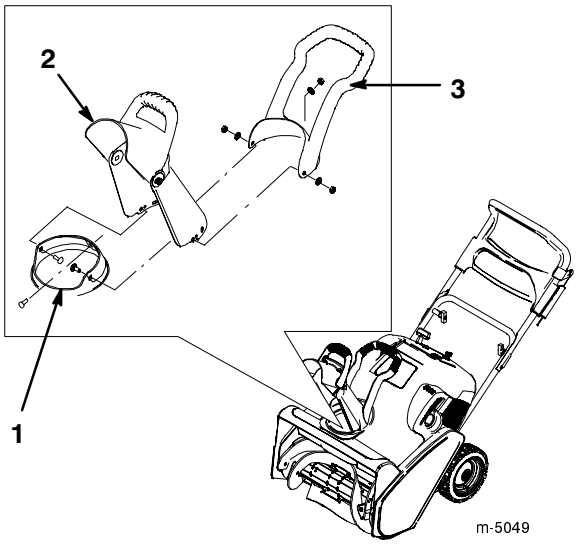

Figure 5

1. Chute ring
2. Discharge chute
3. Chute handle

2. Insert a screw from the inside of the discharge chute until the screw just passes through the hole in the discharge chute (Fig. 5).

3. Insert the chute handle over the discharge chute, align the center hole in the chute handle with the screw, and fully insert the screw through the center hole in the chute handle (Fig. 5).

4. Install a washer and a locknut on the screw, and tighten the locknut until it is finger tight.

5. Align the remaining holes of the discharge chute and the chute ring, and insert the two remaining screws through the holes from the inside of the discharge chute.

6. Install the washers and the locknuts on the screws, and tighten the locknuts until they are finger tight.

7. Tighten all locknuts *securely.*

Before Starting

Mixing Gasoline and Oil

Your Toro snowthrower is powered by a two-cycle engine that requires a 50:1 gasoline-to-oil mixture.

Use only clean, fresh, unleaded gasoline (including oxygenated or reformulated gasoline) with an octane rating of 87 or higher. To ensure freshness, purchase only the amount of gasoline you expect to use in 30 days. Using unleaded gasoline reduces combustion chamber deposits and promotes longer spark plug life.

Engines certified to comply with U.S. EPA emission regulations for ULGE engines are certified to operate on regular unleaded gasoline-and-oil mix, include the following emission control system(s): EM, and do not include any user-adjustable features.

Important Do not use methanol, gasoline containing methanol, gasohol containing more than 10% ethanol, premium gasoline, or white gas. Using these fuels can damage the fuel system.

Important Do not use an automotive oil (such as SAE 30 or 10W30), a two-cycle oil that is not NMMA- or TCW-certified, or a fuel mixed at the wrong gasoline-to-oil ratio. This can cause engine damage not covered under the Toro warranty.

Danger

In certain conditions, gasoline is extremely flammable and highly explosive. A fire or explosion from gasoline can burn you and others and cause property damage.

- **Fill the fuel tank outdoors, in an open area, and when the engine is cold. Wipe up any gasoline that spills.**
- **Do not fill the fuel tank completely full. Add gasoline to the fuel tank until the level is 1/4 to 1/2 in. (6 to 13 mm) below the bottom of the filler neck. This empty space in the tank allows the gasoline to expand.**
- **Never smoke when handling gasoline, and stay away from an open flame or where a spark may ignite gasoline fumes.**
- **Store gasoline in an approved fuel container and keep it out of the reach of children.**
- **Never buy more than a 30-day supply of gasoline.**

Danger

When fueling, under certain circumstances, a static charge can develop, igniting the gasoline. A fire or explosion from gasoline can burn you and others and cause property damage.

- **Always place fuel containers on the ground and away from your vehicle before filling.**
- **Do not fill fuel containers inside a vehicle or on a truck or trailer bed because interior carpets or plastic truck bed liners may insulate the container and slow the loss of any static charge.**
- **When practical, remove gas-powered equipment from the truck or trailer and refuel the equipment with its wheels on the ground.**
- **If this is not possible, then refuel such equipment on a truck or trailer from a portable container, not from a gasoline dispenser nozzle.**
- **If you must use a gasoline dispenser nozzle, keep the nozzle in contact with the rim of the fuel tank or container opening at all times until fueling is complete.**

Note: Use a fuel stabilizer/conditioner for all Toro gasoline-powered products during operation and storage. A fuel stabilizer/conditioner cleans the engine during operation and prevents gum-like varnish deposits from forming in the engine during storage. A fuel stabilizer/conditioner works best when you mix it with fresh gasoline. If you use *Toro Heavy Duty 50:1 All Season 2-Cycle Engine Oil with Fuel Stabilizer*, you do not need to add a fuel stabilizer/conditioner.

Important Do not use fuel additives except a fuel stabilizer during storage. Do not use fuel stabilizers with an alcohol base such as ethanol, methanol, or isopropanol.

1. Pour a half gallon (1.9 liters) of fresh unleaded gasoline into an approved fuel container.

Note: Do not mix gasoline and oil in the fuel tank of the snowthrower. Oil at room temperature mixes easier and more thoroughly than cold oil. Oil below 32°F (0°C) requires additional mixing.

2. Add the full amount of *Toro Heavy Duty 50:1 All Season 2-Cycle Engine Oil with Fuel Stabilizer* or an equivalent high grade, NMMA- or TCW-certified two-cycle oil to the gasoline according to the chart below:

50:1 Gasoline-to-Oil Ratio Mixing Chart	
Gasoline	Oil
1 gallon (3.8 liters)	2.6 ounces (77 ml)
2 gallons (7.6 liters)	5.2 ounces (154 ml)
5 gallons (18.9 liters)	13 ounces (384 ml)

3. Install the cap on the fuel container.
4. Shake the container to mix the gasoline and oil thoroughly.
5. Slowly remove the cap and add the remaining amount of gasoline.

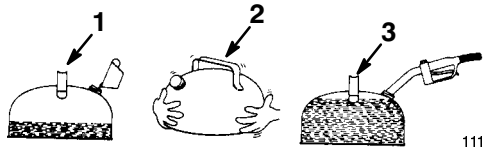

Figure 6

1. Add oil to half of the gasoline
2. Install the cap and shake the can to mix
3. Add the remaining amount of gasoline

Filling the Fuel Tank

Important Do not overfill the fuel tank. The gasoline-and-oil mixture must have room to expand.

1. Clean around the fuel tank cap; do not allow snow or water to enter the fuel tank.
2. Remove the fuel tank cap and fill the fuel tank with the gasoline-and-oil mixture until the level is 1/4 to 1/2 in. (6 to 13 mm) below the bottom of the filler neck. *Do not fill into the filler neck.*
3. Install the fuel tank cap securely and wipe up any spilled fuel.

Operation

Note: Determine the left and right sides of the machine from the normal operating position.

Operating Controls

The snowthrower control panel contains a key switch, a primer, a recoil starter, and an electric-start button (electric-start model only). The choke is below the control panel (Fig. 7).

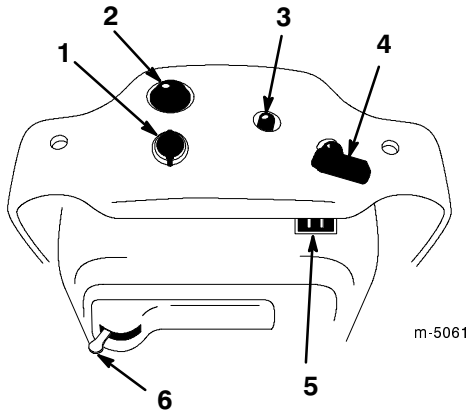

Figure 7

1. Key switch
2. Primer
3. Electric-start button (electric-start model only)
4. Recoil start
5. Cord connection (electric-start model only; underneath the control panel)
6. Choke

Starting the Engine

1. Turn the key to the *On* position and move the choke lever to the right.

2. Cover the hole in the center of the primer with your thumb and push the primer in twice, pausing a moment between pushes. In extremely cold temperatures, repeat this step as necessary.

Note: Take off your glove when you push in the primer so that air cannot escape from the primer hole.

Note: Do not use the choke or the primer when starting a warm engine.

3. Start the engine.

For a recoil starter:

A. Hold the snowthrower handle with one hand and pull the recoil starter vigorously with the other hand.

B. With the engine running, move the choke lever to the left slowly.

For an electric starter:

A. Connect the power cord to the snowthrower and to a standard household power outlet.

Caution

If you leave the snowthrower plugged into a power outlet, someone can inadvertently start the snowthrower and injure others or damage property.

Unplug the power cord whenever you are not starting the snowthrower.

B. Push the starter button.

Run the electric starter no more than ten times at intervals of five seconds on, then five seconds off.

Important Running the electric starter extensively can overheat and damage the starter.

If the engine does not start after this attempt, wait at least 40 minutes to allow the starter to cool before attempting to start it again. Refer to *Troubleshooting* on page 18.

If the engine does not start after the second attempt, take the snowthrower to an Authorized Service Dealer for service.

C. When the engine starts, disconnect the power cord from the snowthrower and the outlet.

D. With the engine running, move the choke lever to the left slowly.

Stopping the Engine

To stop the engine, turn the key to the *Off* position, and wait for all moving parts to stop before leaving the operating position.

Starting the Rotor Blades

To start the rotor blades, squeeze the control bar toward the handle until the snowthrower begins to pivot.

Stopping the Rotor Blades

To stop the rotor blades, release the control bar.

Important When you release the control bar, the rotor blades stop, but the engine continues to run.

Starting the Traction Drive

To start the traction drive, slowly squeeze the control bar toward the handle. The front of the snowthrower pivots downward. When the rotor blades touch the ground, the snowthrower begins to move forward. Squeezing the control bar completely to the handle provides maximum traction.

Stopping the Traction Drive

To stop the traction drive, partially release the control bar until the rotor blades lift off the ground, disengaging the traction drive. Releasing the control bar completely stops both the traction drive and the rotor blades.

Adjusting the Discharge Chute

Move the chute handle left and right to adjust the direction of the snow stream (Fig. 8). The chute deflector handle on top of the discharge chute controls the height of the snow stream. *Do not overtighten the chute deflector mounting locknuts.*

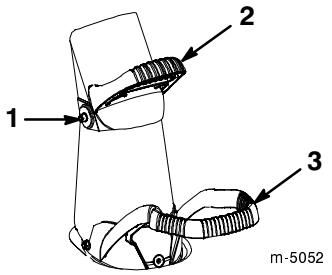

Figure 8

1. Chute deflector mounting locknut (2)
2. Chute deflector handle
3. Chute handle

Important Do not use the chute handle to lift the snowthrower. This can damage both the chute handle and the snowthrower.

Snowthrowing Tips

Warning

The rotor blades can throw stones, toys and other foreign objects and cause serious personal injury to the operator or to bystanders.

- **Keep the area to be cleared free of all objects that the rotor blades could pick up and throw.**
- **Keep all children and pets away from the area of operation.**

- Remove the snow as soon as possible after it falls. This produces the best snow removal results.
- The snowthrower clears down to the ground and propels itself forward when you engage the traction drive.
- If the snowthrower does not propel itself forward on slippery surfaces or in heavy snow, push forward on the handle, but allow the snowthrower to work at its own pace.
- Overlap each swath to ensure complete snow removal.
- Discharge the snow downwind whenever possible.
- Do not attempt to clear snow from a crushed-rock or gravel surface.
- In snowy and cold conditions, some controls and moving parts may freeze. *Do not use excessive force when trying to operate frozen controls.* If you have difficulty operating any control or part, start the engine and let it run for a few minutes.
- After clearing the snow, let the engine run for a few minutes to prevent moving parts from freezing. Shut off the engine and remove all ice and snow from the snowthrower.

Maintenance

Note: Determine the left and right sides of the machine from the normal operating position.

Recommended Maintenance Schedule

Maintenance Service Interval	Maintenance Procedure
Initial	• Check the rotor control cable and the traction drive cable initially, and after the first hour of operation. Adjust them if necessary. • Check for loose fasteners and tighten them if necessary.
Annually	• Check the rotor control cable and the traction drive cable. Adjust them if necessary. • Inspect the rotor blades and replace them if necessary. Replace the scraper when you replace the rotor blades. • Inspect the scraper and replace it if necessary. If the rotor blades are partially or completely worn, replace the rotor blades when you replace the scraper. • Inspect, and gap the spark plug; replace it if necessary. • Inspect the drive belt and replace it if necessary. • For storage, add stabilizer, drain the fuel, and run the engine until the fuel tank and the carburetor are empty. • Check the pressure in the tires and inflate them to between 15 and 20 psi (103 and 137 kPa). • Check for loose fasteners and tighten them if necessary.

Caution

If you leave the wire on the spark plug, someone could start the engine accidentally and seriously injure you or other bystanders.

Disconnect the wire from the spark plug before you do any maintenance. Set the wire aside so that it does not accidentally contact the spark plug.

Adjusting the Rotor Control Cable

Check the rotor control cable for proper adjustment initially, after the first operating hour, and then annually thereafter.

Checking the Rotor Control Cable

1. Stop the engine and wait for all moving parts to stop.
2. Move the left side of the control bar back toward the handle until you remove the slack in the cable (Fig. 9).

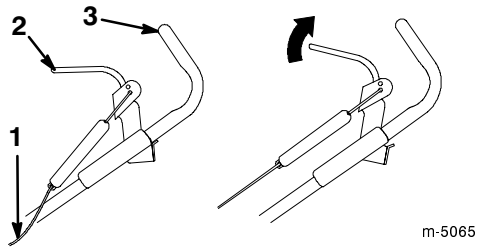

Figure 9

1. Rotor control cable
2. Control bar
3. Handle

3. Ensure that a 1/8 to 1/4 inch (3 to 6 mm) gap exists between the control bar bracket and the handle as shown in Figure 10.

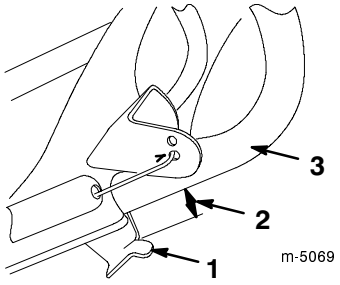

Figure 10

1. Control bar bracket
2. 1/8 to 1/4 in. (3 to 6 mm) gap
3. Handle

Important The rotor control cable must have slack in it when you disengage the control bar in order for the rotor brake to operate properly.

Adjusting the Rotor Control Cable

1. Unhook the spring end from the hole in the center of the control bar bracket as shown in Figure 11.

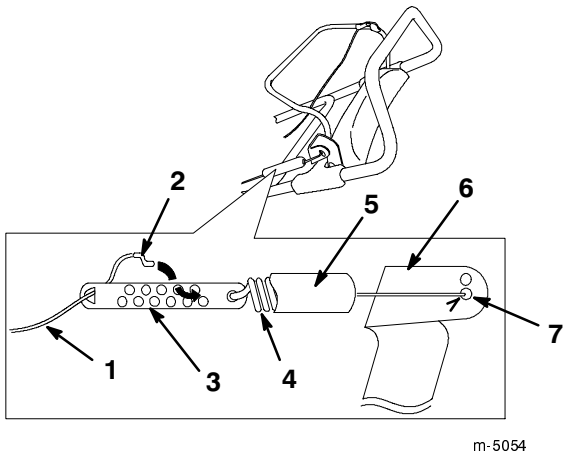

Figure 11

1. Cable
2. Z-fitting
3. Cable adjuster
4. Spring
5. Spring cover
6. Control bar bracket
7. Hole in the center of the control bar bracket

2. Slide the spring cover off the cable adjuster.
3. Unhook the Z-fitting from the cable adjuster (Fig. 11), and position it in a different hole on the adjuster to obtain a proper gap of 1/8 to 1/4 inch (3 to 6 mm) between the control bar bracket and the handle (Fig. 10).

   Note: Moving the Z-fitting to a hole closer to the spring decreases the gap between the control bar bracket and the handle; moving it to a hole farther from the spring increases the gap.
4. Install the spring cover over the cable adjuster.
5. Hook the spring into the hole in the center of the control bar bracket as shown in Figure 11.
6. Check the adjustment (refer to *Checking the Rotor Control Cable* on page 11).

Note: After extended use, the drive belt may wear and lose its proper belt tension. Improper belt tension causes the belt to slip and decreases the performance under a heavy load. Belt slippage may occur after two or three seasons of normal usage (10 to 15 hours). If the drive belt slips (continuously squeals) under a heavy load, increase the belt tension by positioning the spring end in the other hole in the control bar bracket as shown in Figure 11. Adjust the gap between the control bar bracket and the handle to 1/8 to 1/4 in. (3 to 6 mm).

Note: Using the incorrect adjusting hole in the control bar bracket can reduce the drive belt life. Occasional belt slippage (squealing) may occur in extremely wet conditions due to moisture in the drive system. To remove moisture, start the rotor and operate it without a load for 30 seconds. Once you remove the moisture, the drive belt should not slip.

Adjusting the Traction Drive Cable

Check the traction drive cable for proper adjustment initially, after the first operating hour, and then annually thereafter.

Checking the Traction Drive Cable

1. Stop the engine and wait for all moving parts to stop.
2. Squeeze the control bar toward the handle.
3. Hold the control bar to the right side of the handle as shown in Figure 12.

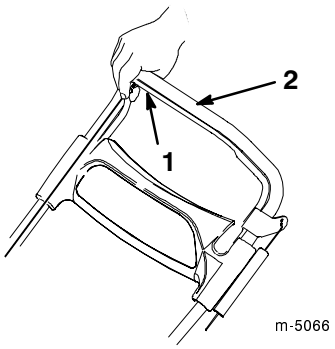

Figure 12

1. Right side of the control bar
2. Handle

4. Ensure that the distance between the pivot plate and the wheel frame is 0 to 1/8 in. (0 to 3 mm) as shown in Figure 13.

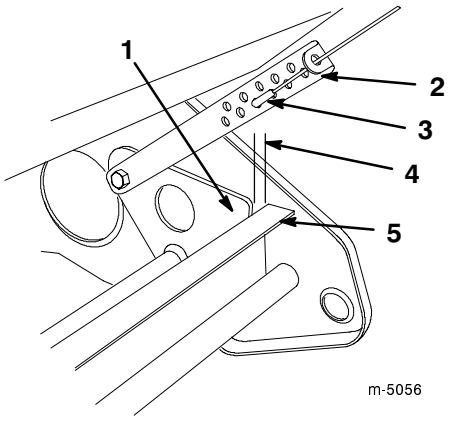

Figure 13

1. Pivot plate
2. Pivot cable adjuster
3. Z-fitting
4. 0 to 1/8 in. (0 to 3 mm) gap
5. Wheel frame

Important If the pivot plate touches the wheel frame before the control bar touches the handle, the cable is too tight. Adjust the cable to increase the gap between the pivot plate and the wheel frame, but ensure that the gap is not more than 1/8 in. (3 mm). Adjusting the cable correctly minimizes the effort needed to operate the control bar.

Adjusting the Traction Drive Cable

Unhook the Z-fitting from the pivot cable adjuster (Fig. 13), and position the Z-fitting in a different hole on the pivot cable adjuster to obtain the proper gap between the pivot plate and the wheel frame.

Note: Moving the Z-fitting to a hole closer to the ground decreases the gap between the pivot plate and the wheel frame; moving it to a hole farther from the ground increases the gap.

Replacing the Rotor Blades

Before each season, inspect the rotor blades for wear. When a rotor blade edge has worn to the wear indicator hole (Fig. 14), replace all three rotor blades to ensure proper performance and to prevent damage to the underside of the snowthrower.

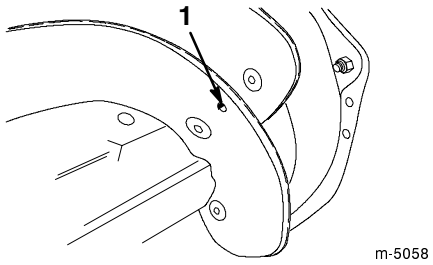

Figure 14

1. Rotor blade wear indicator hole

Important Replace the scraper whenever you replace the rotor blades. This ensures proper snowthrower operation and performance.

Note: The running time and the roughness of the driveway or the sidewalk determines the wear rate of the rotor blades.

Note: You need a No. T27 torx driver to complete this procedure.

1. Stop the engine and wait for all moving parts to stop.
2. Remove the key from the switch.
3. Disconnect the wire from the spark plug. Refer to steps 1 through 3 of *Replacing the Spark Plug* on page 15.

Removing the Old Rotor Blades

Note: To make replacing the rotor blades easier, do not remove all the old rotor blades at once; this disassembles the rotor drum, making installing the new rotor blades more difficult. Replace the rotor blades one at a time to keep the rotor drum intact.

1. Remove the four torx screws and the four locknuts that secure the outer edges of the rotor blade to the rotor assembly (Fig. 15).

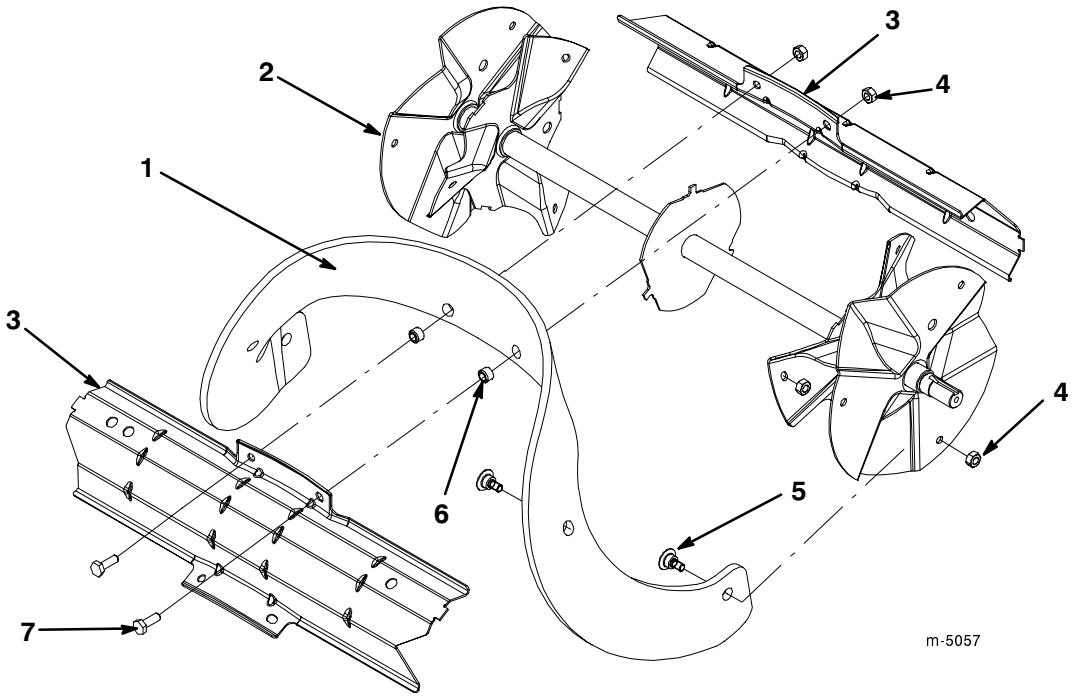

Figure 15

1. Thick rubber side of the rotor blade (3)
2. Rotor assembly
3. Rotor drum
4. Locknut (18)
5. Torx screw (12)
6. Spacer (6)
7. Hex-head cap screw (6)

2. Remove the two hex-head cap screws and two locknuts that secure the center of the rotor blade to the rotor drum (Fig. 15).

3. Slide the rotor blade out from between the rotor drum parts (Fig. 15).

4. Remove the two spacers from the old rotor blade and install them in the new blade.

Installing the New Rotor Blades

1. Examine a new rotor blade edge for the difference in the thickness of the rubber layers (Fig. 16).

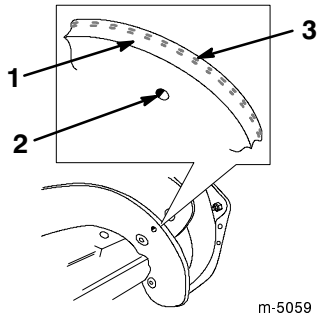

Figure 16

1. Thick rubber side
2. Wear indicator hole
3. Thin rubber side

Install the rotor blades with the thick rubber layer on the *inside* of the curve. (Fig. 16). If you do not install the rotor blades properly, they will wear more quickly.

2. Insert the new rotor blade between the rotor drum parts.

3. Secure the rotor blade to the rotor drum parts with the two hex-head cap screws and two locknuts that you previously removed. Position the bolt heads on the thick rubber side of the rotor blade (Fig. 15).

4. Curve the rotor blade and secure it with the remaining torx screws and locknuts, positioning the screw heads on the thick rubber side of the rotor blade (Fig. 15).

5. Tighten all screws and locknuts securely.

6. Replace the scraper. Refer to *Replacing the Scraper* on page 14.

7. Connect the wire to the spark plug.

8. Install the control panel.

9. Insert the key in the switch.

Replacing the Scraper

Note: If the rotor blades are partially or completely worn, replace the rotor blades when you replace the scraper. This ensures proper snowthrower operation and performance.

1. Stop the engine and wait for all moving parts to stop.
2. Remove the key from the switch.
3. Disconnect the wire from the spark plug. Refer to steps 1 through 3 of *Replacing the Spark Plug* on page 15.
4. Tip the snowthrower backward onto its handle.
5. Remove the six bolts and locknuts that hold the scraper in place (Fig. 17).

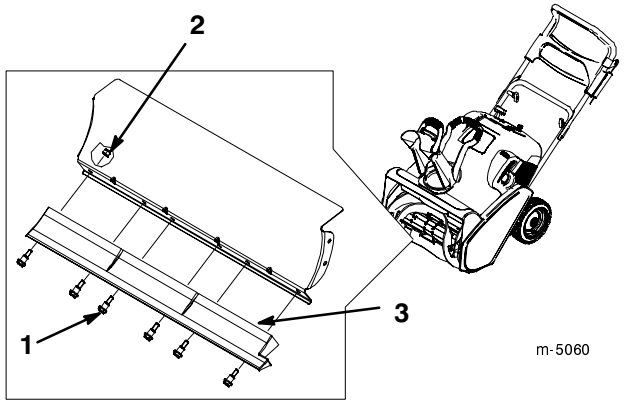

Figure 17

1. Carriage bolt (6)
2. Locknut (6)
3. Scraper

6. Remove the scraper.
7. Install the new scraper to the housing using the bolts and the locknuts you previously removed.
8. Connect the wire to the spark plug.
9. Install the control panel.
10. Insert the key in the switch.

Replacing the Spark Plug

Before each season, check the spark plug. If the electrodes in the center of the plug are dark or have deteriorated, install a new *NGK BPMR4A* spark plug.

1. Remove the two mounting screws that secure the control panel to the housing (Fig. 18).

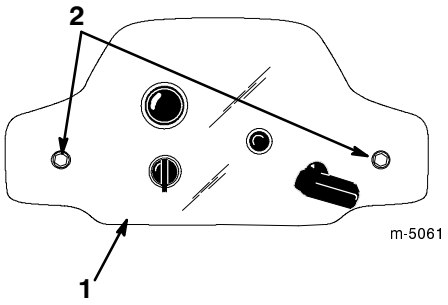

Figure 18

1. Control panel
2. Mounting screws (2)

2. Remove the ignition key and lift off the panel, allowing it to hang on the recoil rope.
3. Lift up the shroud and disconnect the wire from the spark plug (Fig. 19).

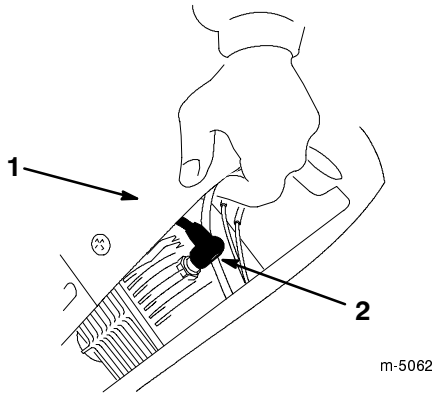

Figure 19

1. Shroud
2. Spark-plug wire

4. Clean any debris from around the base of the spark plug.
5. \Remove the spark plug (Fig. 19).
6. Examine the spark plug and replace it if it is cracked, fouled, or dirty.

Important Do not sandblast, scrape, or clean the spark plug. Dirt may fall into the cylinder and cause engine damage.

7. Set the spark plug gap (Fig. 20) between the electrodes to 0.030 in. (0.76 mm).

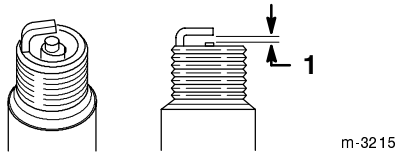

Figure 20

1. 0.030 in. (0.76 mm)

8. Install the spark plug and torque it to 15 ft-lb (20.4 N·m). If you do not have a torque wrench, tighten the plug firmly.

9. Connect the wire to the spark plug.

10. Install the control panel.

Replacing the Drive Belt

Inspect the drive belt before each season, and replace it if it is worn or damaged.

1. Stop the engine and wait for all moving parts to stop.

2. Remove the key from the switch.

3. Disconnect the wire from the spark plug. Refer to steps 1 through 3 of *Replacing the Spark Plug* on page 15.

4. Remove the two self-tapping screws, three cap screws, one washer, and three locknuts that secure the drive belt cover to the snowthrower frame (Fig. 21). Set the drive belt cover aside.

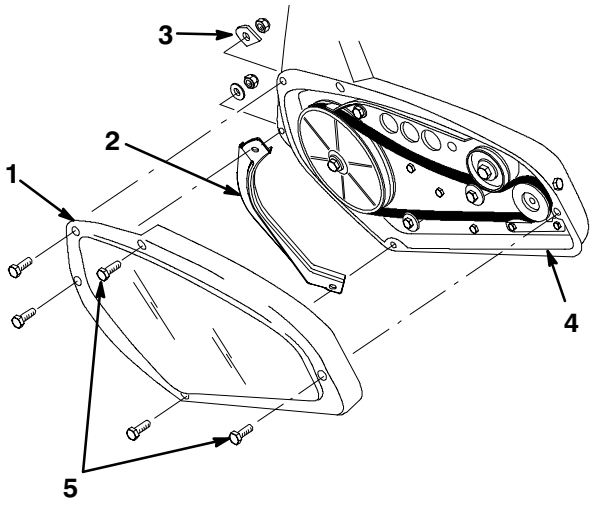

Figure 21

1. Drive belt cover
2. Left rotor guard
3. Diamond-shaped washer
4. Snowthrower frame
5. Self-tapping screws

5. Remove the left rotor guard (Fig. 21) and save it for installation in step 10.

Important The left rotor guard acts as a water seal for the drive. Do not assemble the drive cover without installing this part or the drive belt will slip and fail.

6. Remove the old drive belt from the engine pulley and the idler pulley (Fig. 22).

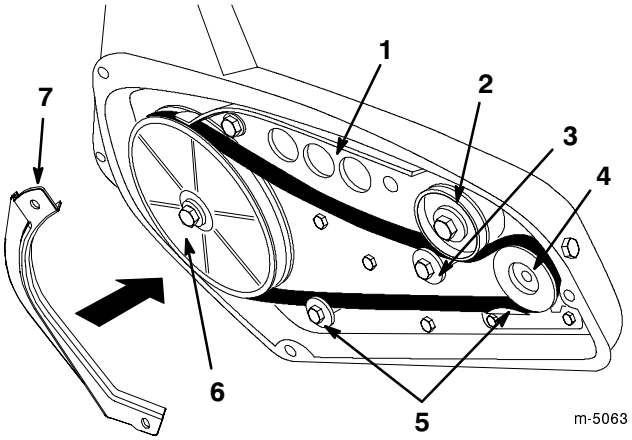

Figure 22

1. Brake arm assembly
2. Idler pulley
3. Roller
4. Engine pulley
5. Belt guides
6. Rotor pulley
7. Left rotor guard

7. Push down on the idler pulley and remove the drive belt from the rotor pulley (Fig. 22).

8. Push down on the idler pulley and route the new drive belt around the rotor pulley (Fig. 22).

9. Release the idler pulley and route the drive belt over the two belt guides, around the engine pulley, and between the idler pulley and the roller (Fig. 22).

Important The drive belt must be on top of the roller and the two belt guides as shown in Figure 22.

10. Install the left rotor guard.

11. Install the drive belt cover. Tighten the fasteners securely, but *do not overtighten*.

Note: Install the diamond-shaped washer as shown in Figures 21 and 23.

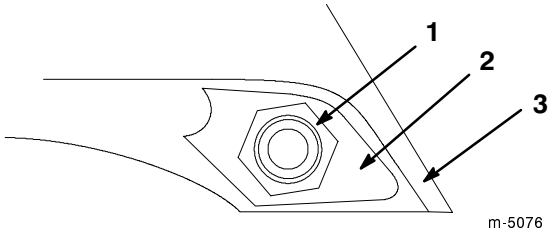

Figure 23

1. Locknut
2. Washer
3. Housing

12. Connect the wire to the spark plug.

13. Install the control panel.

14. Insert the key in the switch.

Checking the Tire Pressure

Inflate both tires to between 15 and 20 psi (103 and 137 kPa).

Emptying the Fuel Tank

1. Stop the engine and wait for all moving parts to stop.
2. Remove the key from the switch.
3. Remove the fuel tank cap and use a pump-type syphon to drain the fuel into a clean, approved fuel container.
4. Start the engine and allow it to run until it consumes all the fuel in the fuel tank and stops running. Repeat this step two more times to remove all the fuel in the fuel tank and the carburetor.

Storage

Important Store the snowthrower in its operating position and on its wheels. Storing the snowthrower on its front housing may cause hard starting.

Warning

Gasoline fumes are highly flammable, explosive, and dangerous if inhaled. If you store the product in an area with an open flame, the gasoline fumes may ignite and cause an explosion.

Do not store the snowthrower in a house (living area), basement, or any other area where ignition sources may be present, such as hot water and space heaters, clothes dryers, furnaces, and other like appliances.

Preparing the Fuel System

1. Add a fuel stabilizer/conditioner to the fuel in the fuel tank as directed.

Note: If you use *Toro 50:1 All Season 2-Cycle Engine Oil with Fuel Stabilizer*, you do not need to add a fuel stabilizer/conditioner.

2. Run the engine for five minutes to distribute the conditioned fuel through the fuel system.
3. Stop the engine, allow it to cool, and drain the fuel tank, or run the engine until it stops. Refer to *Emptying the Fuel Tank* on page 17.
4. Start the engine and run it until it stops.
5. Choke or prime the engine, start it a third time, and run the engine until it will not start.
6. Dispose of unused fuel properly. Recycle it according to local codes, or use it in your automobile.

Note: Do not store stabilized gasoline in an approved fuel container for more than 90 days.

Preparing the Engine

This procedure allows you to close both the intake and exhaust ports of the engine, preventing cylinder bore corrosion.

1. Slowly pull the recoil starter until you feel resistance due to compression pressure, then stop.
2. Release the starter tension gradually by allowing the rope to go back slowly to prevent the engine from reversing due to compression pressure.

Preparing the Snowthrower

1. Tighten all loose screws, bolts, and locknuts. Repair or replace any damaged parts.
2. Clean the snowthrower thoroughly.
3. Cover the snowthrower and store it in a clean, dry place out of the reach of children. Allow the engine to cool before storing it in any enclosure.

Troubleshooting

Toro designed and built your snowthrower for trouble-free operation. Check the following components and items carefully, and refer to *Maintenance* on page 11 for more information. If a problem continues, contact an Authorized Service Dealer.

Problem	Possible Causes	Corrective Action
Electric starter does not turn (electric-start models only)	1. The power cord is disconnected at the outlet or the snowthrower. 2. The power cord is worn, corroded, or damaged. 3. The power outlet is not energized.	1. Connect the power cord to the outlet and/or the snowthrower. 2. Replace the power cord. 3. Have a qualified electrician energize the power outlet.
Engine does not start or starts hard	1. The key is not in the ignition or is in the *Off* position. 2. The choke is in the *Off* position and the primer has not been pressed. 3. The fuel tank is empty or the fuel system contains stale fuel. 4. The engine is flooded. 5. The spark-plug wire is loose or disconnected. 6. The spark plug is pitted, fouled, or the gap is incorrect. 7. The fuel cap vent is restricted.	1. Insert the key into the ignition and turn it to the *On* position. 2. Move the choke to the *On* position and press the primer two times. 3. Drain and fill the fuel tank with a fresh gasoline-and-oil mixture (not more than 30 days old). If the problem persists, contact an Authorized Service Dealer. 4. Move the choke to the *Off* position and pull the rope several times to clear out the rich fuel-and-air mixture from the engine. 5. Connect the wire to the spark plug. 6. Check the spark plug and adjust the gap if necessary. Replace the spark plug if it is pitted, fouled, or cracked. 7. Remove the vent restriction or replace the fuel cap.
Engine runs rough	1. The choke is in the *On* position. 2. The fuel system contains stale fuel. 3. The spark-plug wire is loose. 4. The spark plug is pitted, fouled, or the gap is incorrect.	1. Move the choke to the *Off* position. 2. Drain and fill the fuel tank with a fresh gasoline-and-oil mixture (not more than 30 days old). If the problem persists, contact an Authorized Service Dealer. 3. Connect the wire to the spark plug. 4. Check the spark plug and adjust the gap if necessary. Replace the spark plug if it is pitted, fouled, or cracked.

Problem	Possible Causes	Corrective Action
Engine runs, but the snowthrower discharges snow poorly or not at all	1. You are walking too fast or too slow.	1. Change your walking speed.
	2. You are trying to remove too much snow per swath.	2. Reduce the amount of snow removed per swath.
	3. You are trying to remove extremely heavy or wet snow.	3. Don't overload the snowthrower with extremely heavy or wet snow; reduce the amount of snow removed per swath.
	4. The discharge chute is plugged.	4. Stop the engine, wait for all moving parts to stop, and use a stick to remove the snow from the discharge chute.
	5. The rotor control cable is improperly adjusted or broken.	5. Adjust or replace the rotor control cable.
	6. The drive belt is loose or is off the pulley.	6. Inspect the drive belt, and install or replace it.
	7. The drive belt is worn or broken.	7. Replace the drive belt.
	8. The rotor blades are worn.	8. Replace the rotor blades and the scraper.
Snowthrower does not properly clear snow off the surface	1. The snow on the surface to be cleared is compacted down.	1. Throw the snow off the surface before it becomes compacted.
	2. The front of the snowthrower is not down.	2. Check the traction drive cable, and adjust or replace it.
	3. The scraper is excessively worn.	3. Replace the scraper and the rotor blades.
	4. The rotor blades are excessively worn.	4. Replace the rotor blades and the scraper.
Snowthrower does not self-propel	1. The front of the snowthrower is not down.	1. Check the traction drive cable, and adjust or replace it.
	2. The rotor blades are excessively worn.	2. Replace the rotor blades and the scraper.
	3. The snow is too deep or the surface is too slippery.	3. Push forward on the handle, but allow the snowthrower to work at its own pace.
Rotor blades do not stop properly	1. The rotor control cable is improperly adjusted.	1. Adjust the rotor control cable.

The Toro Starting Guarantee

A Five-Year Full Warranty on All
Toro GTS®-5 Engines

Conditions and Products Covered

The Toro Company and its affiliate, Toro Warranty Company, pursuant to an agreement between them, jointly guarantee that your Toro Engine will start on the first or second pull for five years from the date of purchase—if you provide the routine maintenance it requires—or we will fix it free of charge. This warranty covers the cost of parts and labor, but you must pay transportation costs. This covers Toro rotary mower and snow product engines.

Instructions for Obtaining Warranty Service

If the starting performance of your Toro Engine should diminish to the point where it will not start in one or two pulls by a normal, able-bodied adult, you should follow the procedures below:

4. Contact any Authorized Service Dealer, Master Service Dealer, or Toro Distributor (the Yellow Pages of your telephone directory is a good reference source). Or, call 1-800-421-9684 for the Toro 24 hour dealer locator system.
5. You will be instructed to return the product to that outlet or another Authorized Toro Service outlet which might be more convenient.
6. Bring the product, your maintenance records, and proof of purchase to the Service Dealer.

If for any reason you are dissatisfied with the Service Dealer's analysis of your engine's starting condition, or the assistance provided, please feel free to contact us at:

Customer Service Department
Toro Warranty Company
8111 Lyndale Avenue South
Bloomington, MN 55420-1196
952-888-8801 or 800-421-9684

Owner Responsibilities

You must maintain your Toro Engine by following the maintenance schedule detailed in the operator's manual. You must record this work in the maintenance chart provided in your operator's manual and keep your proof of purchase. Such routine maintenance, whether performed by a dealer or by you, is at your expense.

Items and Conditions Not Covered

There is no other express warranty except for The Toro Total Coverage Guarantee and special emission system coverage on some products. This warranty does not cover the following:

- Any repairs on products used commercially
- Normal maintenance including replacement of spark plugs, air filter, fuel filter, and carburetor adjustments
- Oil change and lubrication
- Repairs or adjustments due to the following:
  - failure to follow proper maintenance procedures
  - rotary mower blade or snowthrower auger/paddles striking an object
  - contaminants in the fuel system
  - improper fuel or fuel mixture (consult your operator's manual if in doubt)
  - failure to drain the fuel system prior to any period of non-use over three months
  - operation misuse, neglect, or accidents
  - repairs or attempted repairs by anyone other than an Authorized Service Dealer
- Special operational conditions where starting may require more than two pulls, including the following:
  - first time starts after extended period of non-use or seasonal storage
  - cool temperature starts such as those found in early spring and late autumn (applies to rotary products only)
  - improper starting procedures

    If you are having difficulty starting your unit, please check the operator's manual to ensure you are using the correct starting procedures. This can save an unnecessary visit to a Service Dealer.

All warranty repairs reimbursable under this warranty must be performed by an Authorized Toro Service Dealer using Toro approved replacement parts.

General Conditions

Repair by an Authorized Toro Service Dealer is your sole remedy under this warranty.

Neither The Toro Company nor Toro Warranty Company is liable for indirect, incidental or consequential damages in connection with the use of the Toro Products covered by this warranty, including any cost or expense of providing substitute equipment or service during reasonable periods of malfunction or non-use pending completion of repairs under this warranty.

This warranty gives you specific legal rights, and you may also have other rights which vary from state to state.

Guaranteed to Start Maintenance Record

To keep the starting guarantee in effect, you must perform the following maintenance after every 25 operating hours, more often in dusty and dirty conditions. Follow the procedures in this operator's manual and record all maintenance activities on this chart.

Date	Hours Used	Air Cleaner Service (mowers only)	Change Oil (does not apply to two-cycle)	Lubricate Wheels (mowers only)	Check Spark Plug	Storage Preparation

Date	Hours Used	Air Cleaner Service (mowers only)	Change Oil (does not apply to two-cycle)	Lubricate Wheels (mowers only)	Check Spark Plug	Storage Preparation

Federal Emission Control Warranty Statement

A Two-Year Limited Warranty

Your Warranty Rights and Obligations

The U.S. Environmental Protection Agency (EPA), Toro, and Toro Warranty Company are pleased to explain the emission control system warranty on your 1997 and later utility/lawn/garden equipment engine. 1997 and later model year utility/lawn/garden equipment engines must be designed, built and equipped, at the time of sale, to meet the U.S. EPA regulations for small non-road engines. The equipment engine must be free from defects in materials and workmanship, which cause it to fail to conform with U.S. EPA standards, for the first two years of engine use from the date of sale to the ultimate purchaser. Toro and Toro Warranty Company warrant the emission control system on your utility/lawn/garden equipment engine for the period of time listed above, provided there has been no abuse, neglect, or improper maintenance of your utility/lawn/garden equipment engine.

Your emission control system may include parts such as the carburetor or fuel injection system, the ignition system, and catalytic converter. Also included may be hoses, belts, connectors, and other emission related assemblies.

Where a warrantable condition exists, Toro and Toro Warranty Company promise to repair your engine at no cost to you, including diagnosis, parts, and labor.

Manufacturer's Warranty Coverage

Toro and its affiliate, Toro Warranty Company, pursuant to an agreement between them, jointly warrant the 1997 and later utility/lawn/garden equipment engines for two years from the date of delivery. If any emission-related part on your engine is defective in materials or workmanship, we will repair or replace the part, free of charge.

Owner Responsibilities

As the engine owner, you are responsible for the performance of the required maintenance listed in your operator's manual. We recommend that you retain all receipts covering maintenance on your equipment, but we cannot deny warranty solely for the lack of receipts or for your failure to ensure the performance of all scheduled maintenance.

Any replacement part or service that is equivalent in performance and durability may be used in non-warranty maintenance or repairs, and shall not reduce our warranty obligation.

As the engine owner, you should be aware that we may deny you warranty coverage if your engine or a part has failed due to abuse, neglect, improper maintenance, or unapproved modifications or parts.

You are responsible for presenting your equipment engine to an Authorized Service Dealer as soon as a problem exists. The warranty repairs should be completed in a reasonable amount of time, not to exceed thirty (30) days.

If you have any questions regarding your warranty rights and responsibilities, or if you need a referral to a Toro Service Dealer, please feel free to contact us at:

Customer Service Department
Toro Warranty Company
8111 Lyndale Avenue South
Bloomington, MN 55420-1196
952-888-8801 or 800-421-9684

Warranted Parts

The warranty period begins on the date the engine or equipment is delivered to a retail purchaser. Toro and Toro Warranty Company jointly warrant to the initial owner and each subsequent purchaser that the engine is free from defects in materials and workmanship, which cause the engine to fail to conform with applicable regulations, for a period of two years.

Failures caused by abuse, neglect, or improper maintenance are not covered. The use of add-on or modified parts can be grounds for disallowing a warranty claim. We are not liable to cover failures of warranted parts caused by the use of add-on or modified parts. We are liable for damages to other engine components caused by the failure of a warranted part still under warranty. The owner is responsible for the performance of the required maintenance, as defined in the operator's manual.

Any warranted part which is not scheduled for replacement as required maintenance, or which is scheduled only for regular inspection to the effect of "repair or replace as necessary" shall be warranted for the warranty period. Any warranted part which is scheduled for replacement as required maintenance shall be warranted for the period of time up to the first scheduled replacement point for that part. Coverage under this warranty extends only to the parts listed below (the emissions system parts) to the extent that these parts were present on the engine when purchased.

- Fuel Metering System
  - Cold start enrichment system including the choke mechanism or priming system
  - Fuel pump
  - Air fuel ratio feedback system
  - Carburetor and internal parts
  - Fuel injection system
- Air Induction System
  - Air cleaner
  - Reed intake system
  - Intake manifold
  - Controlled hot air intake system
- Ignition System
  - Spark plug(s)
  - Ignition coils and electronics
  - Advance/retard mechanisms
- Catalytic Converter/Thermal Reactor System
  - Catalytic converter
  - Thermal reactor
  - Exhaust manifold
- Air Injection System
  - Air injection system or pulse valve
  - Valves affecting distribution of air
- Exhaust Gas Recirculation (EGR) System
  - EGR valve body and piping system connecting to the intake side of the engine
  - EGR control system
- Particulate Controls
  - Traps, filters, precipitators, and any other device used to capture particulate emissions
- Miscellaneous Items Used in the Above Systems
  - Vacuum, temperature, and time-sensitive valves and switches
  - Electronic controls
  - Hoses, connectors, and assemblies of same

How to Get Warranty Service

Should you feel your Toro Product requires warranty service, contact the dealer who sold you the product or any Authorized Service Dealer or Master Service Dealer. The Yellow Pages of your telephone directory is a good reference source. The dealer will either arrange service at his/her dealership or recommend another Authorized Service Dealer who may be more convenient. You may need proof of purchase (copy of registration card, sales receipt, etc.) for warranty validation. The owner shall not be charged for diagnostic labor which leads to the determination that a warranted part is defective, if the diagnostic work is performed at a warranty station.

General Conditions

Neither The Toro Company nor Toro Warranty Company is liable for indirect, incidental or consequential damages in connection with the use of the Toro Products covered by this warranty, except for damages to other engine components caused by the failure of a warranted part still under warranty. Some states do not allow exclusions of incidental or consequential damages, or limitations on how long an implied warranty lasts, so the above exclusions and limitations may not apply to you.

All implied warranties of merchantability (that the product is fit for ordinary use) and fitness for use (that the product is fit for a particular purpose) are limited to the duration of the express warranty.

This warranty gives you specific legal rights, and you may also have other rights which vary from state to state.

Part No. 374-0023 Rev. A

Gas Powered
Snow Products

The Toro Total Coverage Guarantee

A Two-Year Full Warranty
(Limited Warranty for Commercial Use)

Conditions and Products Covered

The Toro Company and its affiliate, Toro Warranty Company, pursuant to an agreement between them, jointly promise to repair any Toro Product used for normal residential purposes* if defective in materials or workmanship for a period of two years from the date of purchase.

This warranty includes the cost of parts and labor, but you must pay transportation costs. Transportation within a fifteen mile radius of the servicing dealer is covered under this warranty for two-stage snowthrowers only.

This warranty applies to all gasoline powered snow products.

* Normal residential purposes means use of the product on the same lot as your home. Use at more than one location is considered commercial use, and the commercial use warranty would apply.

Limited Warranty for Commercial Use

Toro Consumer Products used for commercial, institutional, or rental use are warranted against defects in materials or workmanship for 45 days from the date of purchase.

Instructions for Obtaining Warranty Service

Should you feel your Toro Product contains a defect in materials or workmanship, contact the dealer who sold you the product or any Authorized Service Dealer or Master Service Dealer. The Yellow Pages of your telephone directory is a good reference source. The dealer will either arrange service at his/her dealership or recommend another Authorized Service Dealer who may be more convenient. You may need proof of purchase (copy of registration card, sales receipt, etc.) for warranty validation.

If for any reason you are dissatisfied with the Service Dealer's analysis of the defect in materials or workmanship or if you need a referral to a Toro Service Dealer, please feel free to contact us at:

Customer Service Department
Toro Warranty Company
8111 Lyndale Avenue South
Bloomington, MN 55420-1196
952-888-8801 or 800-421-9684

Owner Responsibilites

You must maintain your Toro Product by following the maintenance procedures described in the operator's manual. Such routine maintenance, whether performed by a dealer or by you, is at your expense.

Items and Conditions Not Covered

There is no other express warranty except for special emission system coverage on some products and the Toro Starting Guarantee on GTS engines. This express warranty does not cover:

- Cost of regular maintenance service or parts, such as filters, fuel, lubricants, tune-up parts, blade sharpening, brake and clutch adjustments.
- Any product or part which has been altered or misused or required replacement or repair due to normal wear, accidents, or lack of proper maintenance.
- Repairs necessary due to improper fuel, contaminants in the fuel system, or failure to properly prepare the fuel system prior to any period of non-use over three months.

All repairs covered by this warranty must be performed by an Authorized Toro Service Dealer using Toro approved replacement parts.

General Conditions

Repair by an Authorized Toro Service Dealer is your sole remedy under this warranty.

Neither The Toro Company nor Toro Warranty Company is liable for indirect, incidental or consequential damages in connection with the use of the Toro Products covered by this warranty, including any cost or expense of providing substitute equipment or service during reasonable periods of malfunction or non-use pending completion of repairs under this warranty. Some states do not allow exclusions of incidental or consequential damages, or limitations on how long an implied warranty lasts, so the above exclusions and limitations may not apply to you.

This warranty gives you specific legal rights, and you may also have other rights which vary from state to state.

Countries Other than the United States or Canada

Customers who have purchased Toro products exported from the United States or Canada should contact their Toro Distributor (Dealer) to obtain guarantee policies for your country, province, or state. If for any reason you are dissatisfied with your Distributor's service or have difficulty obtaining guarantee information, contact the Toro importer. If all other remedies fail, you may contact us at Toro Warranty Company.

Part No. 374-0011 Rev. -