Form No. 3388-253 Rev C

TORO®

Count on it.

Parts Catalog

TimeCutter® SWX 4250

Riding Mower

Model No. 74787—Serial No. 315000001 and Up

Register at www.Toro.com.
Original Instructions (EN)

3388-253 C

Ordering Replacement Parts

To order replacement parts, please supply the part number, the quantity, and the description of each part desired.

Understanding Reference Numbers

Each identified part in an illustration has a reference number. The reference number for a part also appears in the parts list, along with other information about the part.

This catalog uses two special reference number formats, one to indicate parts in a service assembly and another to indicate the quantity of a given part in an illustration.

Service Assembly Reference Numbers

Parts in service assemblies have reference numbers in the form a:b. The a represents the reference number of the entire service assembly and the b represents a sequential number unique to each part within the service assembly.

For example, a wheel assembly might be identified by reference number 6, the tire by 6:1, the valve by 6:2, and the wheel by 6:3. When you order the assembly identified by reference number 6, you receive all parts identified by reference numbers 6:1,6:2, and 6:3. However, you may also order any part individually. Reference numbers of this type appear in illustration and in parts lists.

Reference Numbers Indicating Quantity

In an illustration, if a reference number indicates more than one part, the reference number has the form nX y. The n represents the quantity of the part, the X is the multiplication symbol, and the y represents the reference number.

For example, in an illustration, the reference number 2X 37 means that two of the parts identified by reference number 37 are indicated.

Contents

Frame, Front Axle and Caster Wheel Assembly 4
13 Inch Wheel and Tire Assembly No. 119-3473 6
Deck Lift Assembly 8
Motion Control Assembly 10
Brake Box Assembly 12
Seat Assembly 14
Seat Assembly No. 131-4147 16
Belt and Idler Assembly 18
Steering Column Assembly 20
Steering Cable Assembly 22
Gear Assembly 24
Steering Assembly 26
Hydro Transaxle Drive and Rear Wheel Assembly 28
4 Ply Wheel and Tire Assembly No. 120-5523 30
2 Ply Wheel and Tire Assembly No. 131-3671 32
Clutch Assembly 34
Battery and Electrical Assembly 36
Wire Harness Assembly 38
Speed Control Assembly 40
Fuel Delivery Assembly 42
Engine and Muffler Assembly 44
Fuel System Assembly with Non-Canister Style Air Filter 46
Carburetor Assembly with Non-Canister Style Air Filter 48
Air Intake and Filtration Assembly with Non-Canister Style Air Filter 50
Ignition and Electrical Assemlby 52
Crankcase Assembly 54
Governor Control Assembly 56
Piston and Cylinder Head Assembly 58
Blower Housing Assembly 60
Gasket and Seal Kit Assembly 62
Body Styling and Fuel Tank Assembly 64
42 Inch Deck Assembly 66
42 Inch Deck, Blade, and Spindle Assembly 68
42 Inch Deck and Decal Assembly No. 131-3608 70
Attachments and Accessories 72

© 2020—The Toro® Company
8111 Lyndale Avenue South
Bloomington, MN 55420

Contact us at www.Toro.com.
Printed in the USA.
All Rights Reserved

Frame, Front Axle and Caster Wheel Assembly

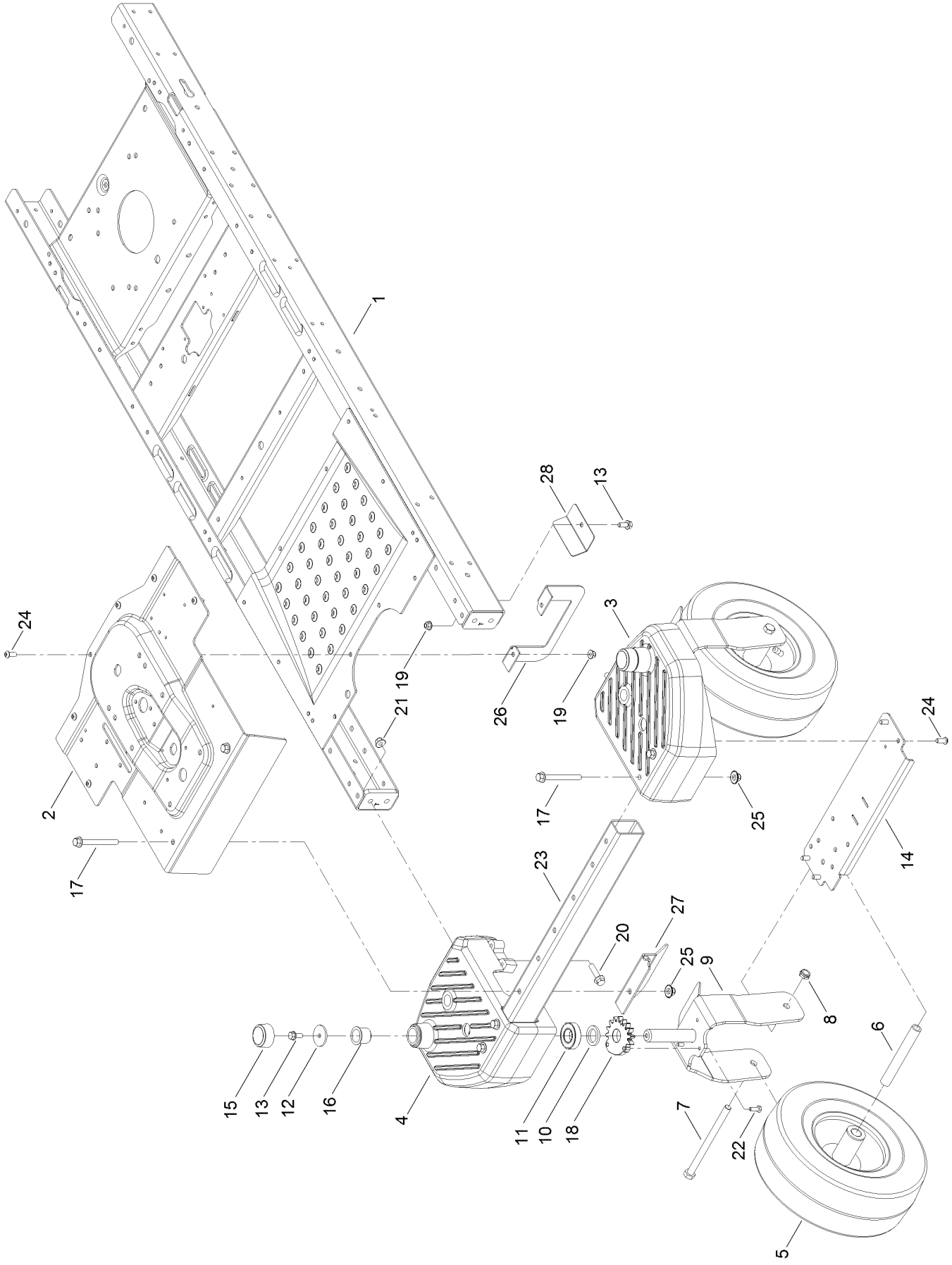

Frame, Front Axle and Caster Wheel Assembly (continued)

Ref.	Part Number	Qty.	Description
1	130-0804-01	1	Frame ASM
2	130-6931-05	1	Pan-Steer, Front
3	130-0748-05	1	Housing-Spindle, LH
4	130-0746-05	1	Housing-Spindle, RH
5	119-3473	2	13 Inch Wheel And Tire ASM
6	119-3475	2	Spanner
7	325-37	2	Screw-HH
8	3296-45	2	Nut-Hex
9	130-0670-03	2	Caster Fork ASM
10	117-7394	2	Washer-Thrust
11	109-3678	2	Bearing-Ball
12	131-1032	2	Washer-Flat
13	3234-47	3	Screw-HHF
14	130-6983-03	1	Plate-Bridge, Narrow
15	130-7015	2	Cap-Caster
16	126-1963	2	Bushing-Pivot
17	115-7660	6	Screw-HHF
18	130-0689	2	Gear-Wheel, 15 Tooth
19	104-8300	7	Nut-HF, NI
20	114-4681	4	Screw-HHF
21	104-8301	4	Nut-HF, NI
22	321-4	4	Screw-HH
23	130-6902-03	1	Tube-Front, Narrow
24	131-4080	10	Screw-HSBH
25	109-6658	6	Nut-Flange, NI
26	131-8739-01	1	Bracket-Upstop, Long
27	132-0868-03	1	Guard-Front
28	132-0901-03	1	Plate-Guard

13 Inch Wheel and Tire Assembly No. 119-3473

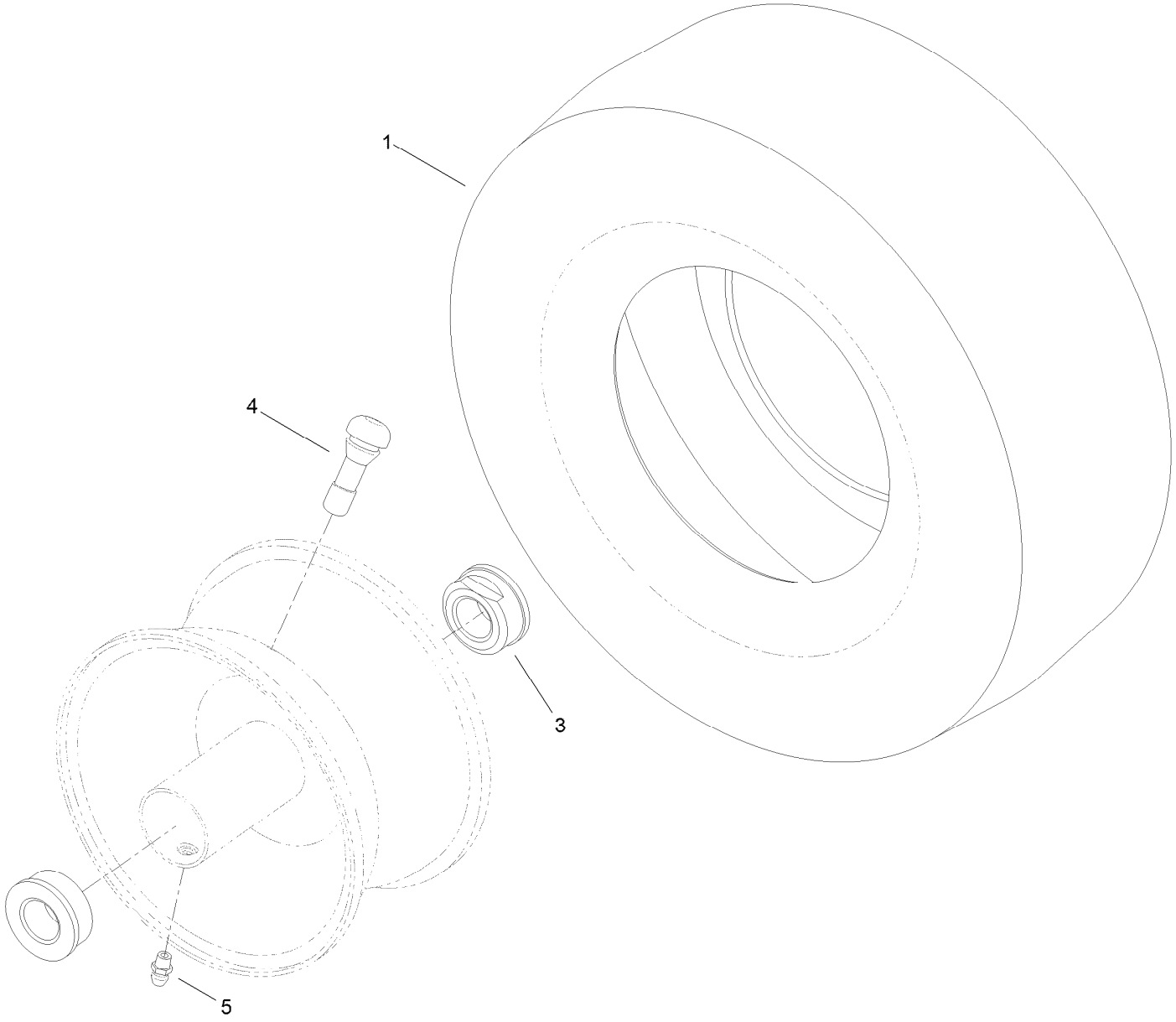

13 Inch Wheel and Tire Assembly No. 119-3473 (continued)

Ref.	Part Number	Qty.	Description
1	119-3471	1	Tire-13 Inch
3	114-1640	2	Bushing-Flange
4	232-27	1	Stem-Valve
5	302-5	1	Fitting-Grease
99	232-46	1	Tube-Inner ●

● Not illustrated

Deck Lift Assembly

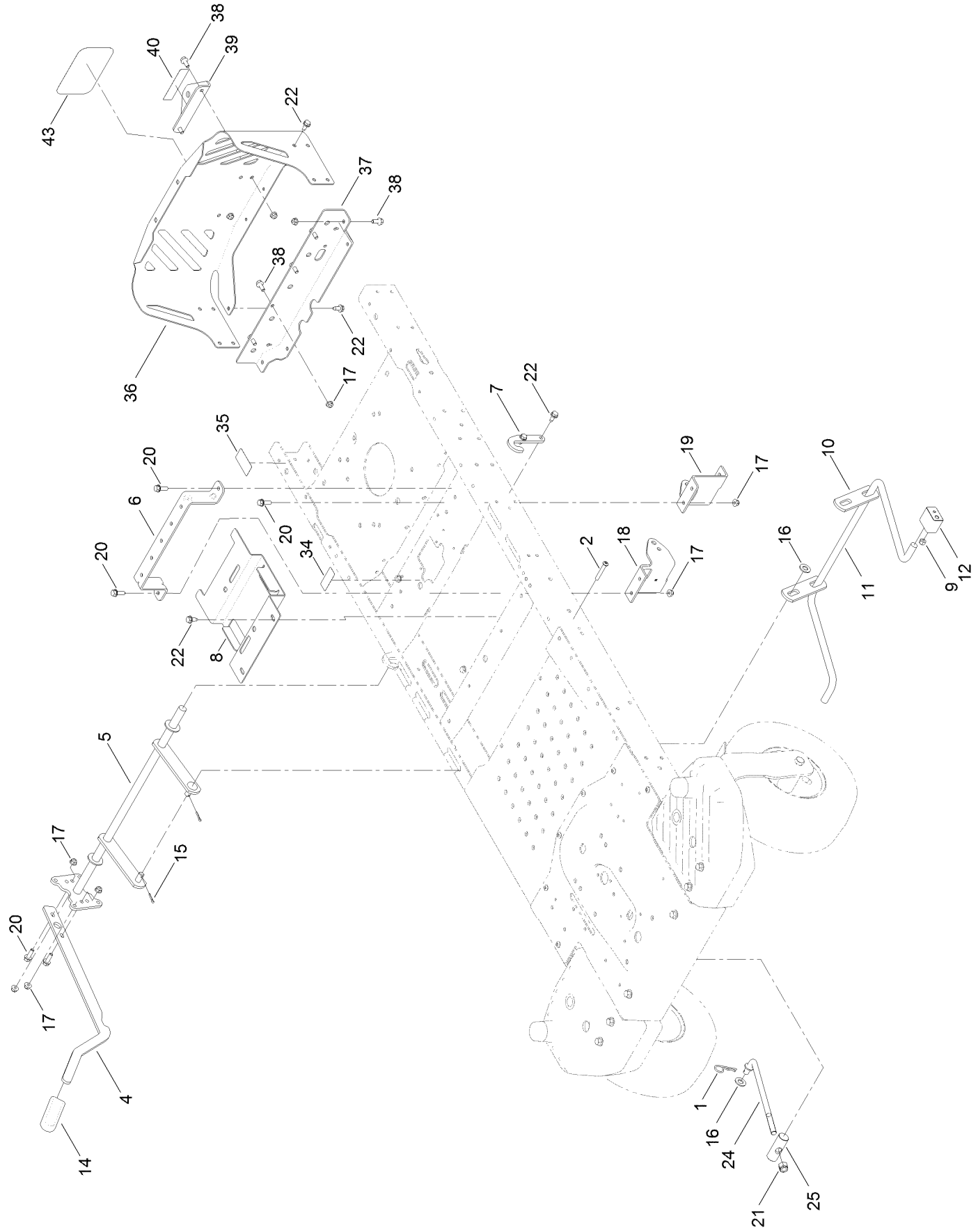

Deck Lift Assembly (continued)

Ref.	Part Number	Qty.	Description
1	1-806005	1	Pin-Cotter
2	120-5499	2	Screw-HSBH
4	119-3427-03	1	Lever-Lift
5	117-7346-03	1	Lift-Deck, Narrow
6	119-3435-03	1	Brace-Seat, Rear (Narrow)
7	119-8875	2	Bracket-Lift
8	131-0914-03	1	Bracket-Battery
9	3296-29	2	Nut-Lock, NI
10	108-7840	2	Link-Lift
11	108-7839	1	Arm-Lift, Rear
12	108-7845	2	Block-Pivot
14	1-633268	1	Grip-Lever
15	3272-11	2	Pin-Cotter
16	3256-26	3	Washer-Flat
17	104-8300	14	Nut-HF, NI
18	131-0901-01	1	Mount-Hydro, Front (RH)
19	131-0902-01	1	Mount-Hydro, Front (LH)
20	3234-29	6	Screw-HHF
21	3296-19	1	Nut-Hex
22	32144-70	16	Screw-HWHTF
24	131-3945	1	Rod-Mount, Deck
25	119-8810	1	Pin-Pivot
34	121-5684	1	Decal-Location, Service Dealer
35	121-2989	2	Decal-Bypass
36	127-3353-03	1	Guard-Engine, Narrow
37	130-6950-01	1	Crossmember-Rear, Narrow
38	3234-47	8	Screw-HHF
39	117-1232-03	1	Bracket-Hitch
40	131-4036	1	Decal
43	99-4693	1	Decal

Motion Control Assembly

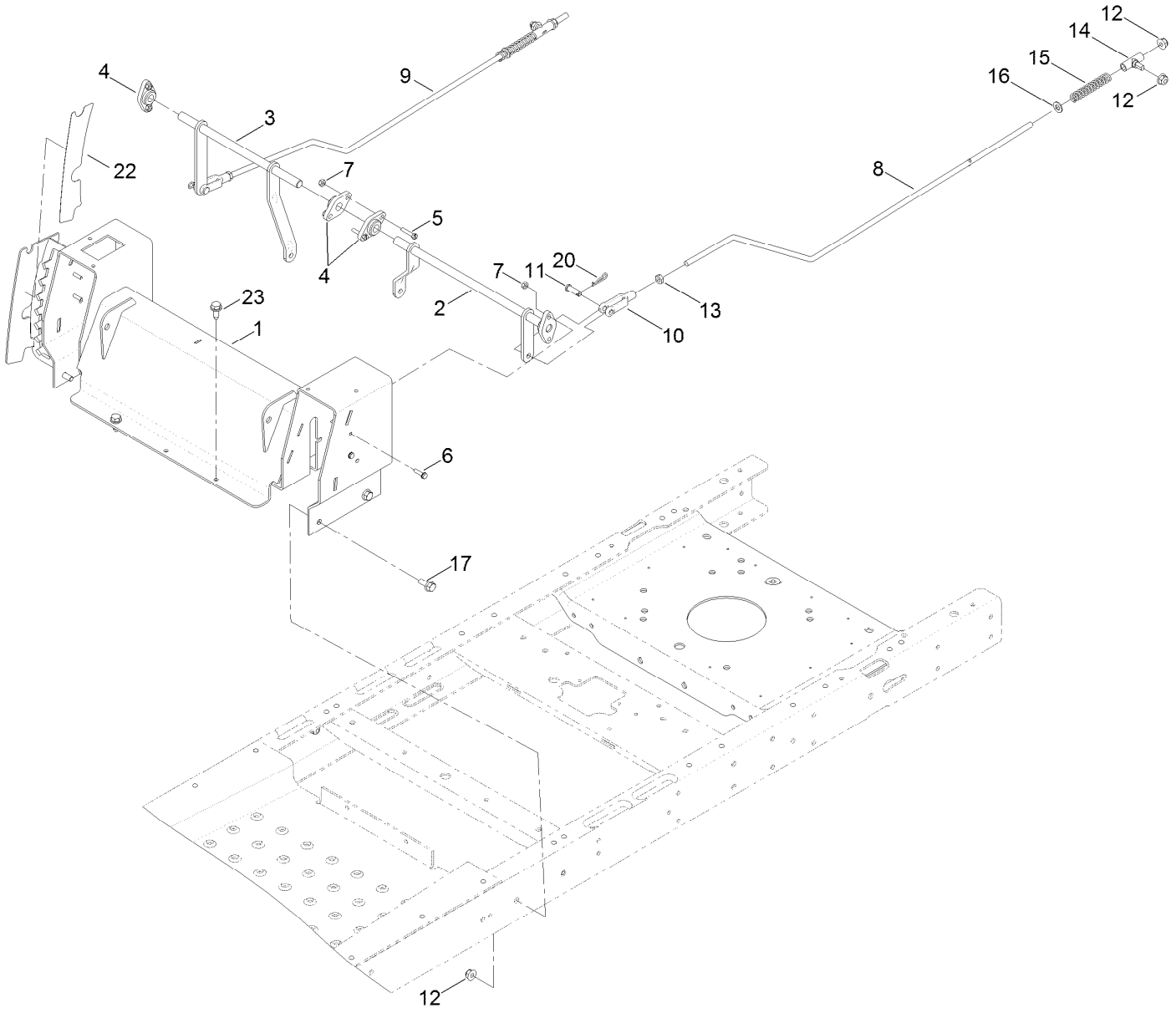

Motion Control Assembly (continued)

Ref.	Part Number	Qty.	Description
1	130-6898-03	1	Control Box ASM
2	130-6903	1	Bellcrank-LH, Narrow
3	130-6904	1	Bellcrank-RH, Narrow
4	127-0146	4	Bearing-Flange
5	32105-12	2	Screw
6	3290-126	4	Screw-HWH
7	3296-2	6	Nut-Lock, NI
8	125-1812	1	Rod-Hydro, LH
9	127-3378	1	Rod-Hydro, RH
10	1-303105	2	Yoke-Adjustable
11	1-808280	2	Pin-Clevis
12	104-8300	8	Nut-HF, NI
13	3220-2	2	Nut-Jam
14	119-8842	2	Mount-Rod, Hydro
15	1-603807	2	Spring-Return, Neutral
16	3256-23	2	Washer-Plain
17	3234-47	4	Screw-HHF
20	1-806003	2	Pin-Cotter
22	119-8871	1	Decal-HOC
23	32144-70	2	Screw-HWHTF

Brake Box Assembly

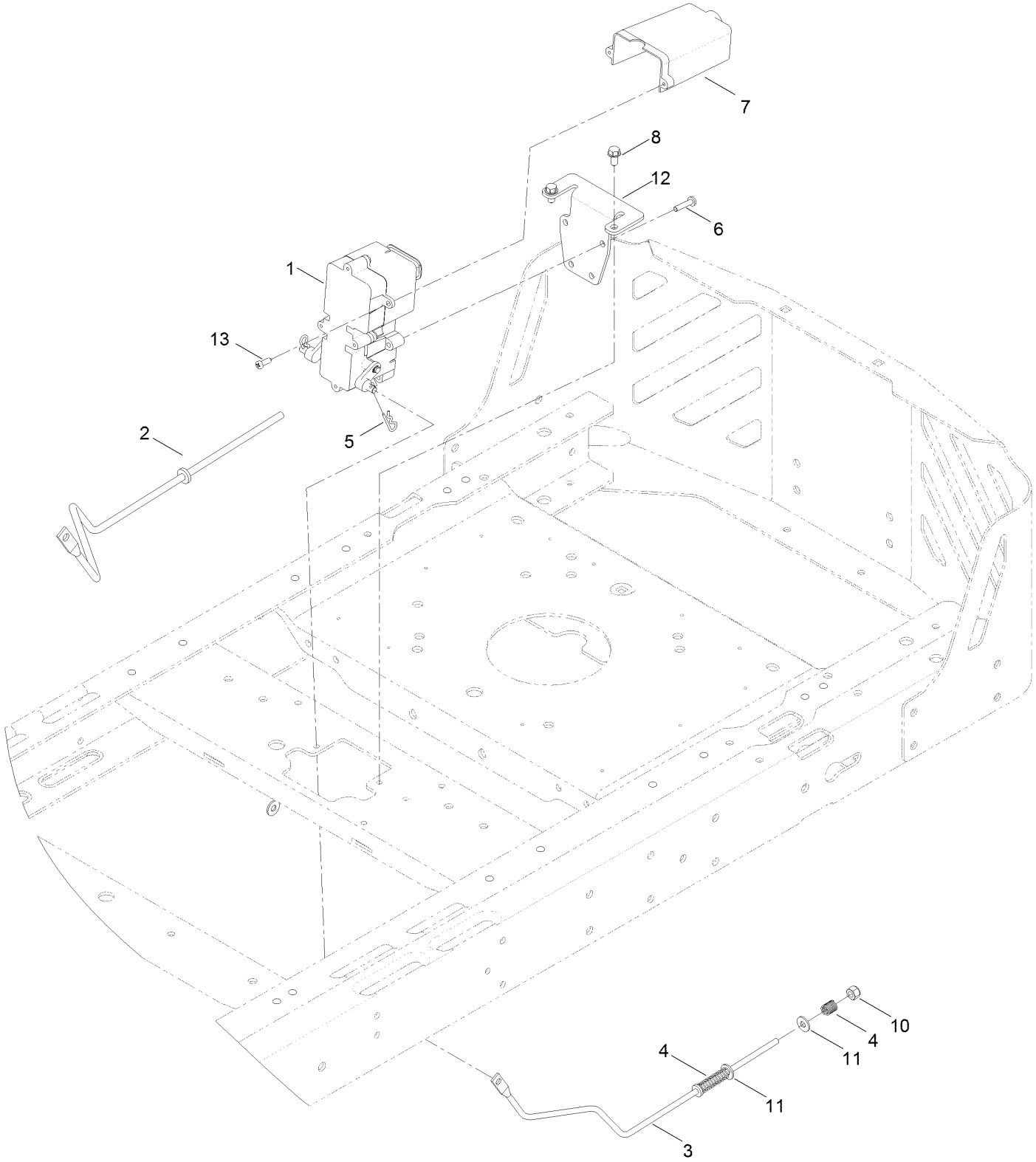

Brake Box Assembly (continued)

Ref.	Part Number	Qty.	Description
1	130-0795	1	Brake Box ASM
2	121-2974	1	Rod-Brake, RH
3	121-2975	1	Rod-Brake, LH
4	117-1169	4	Spring-Compression
5	3290-307	2	Pin-Cotter
6	32144-36	4	Screw-PPH
7	130-6974	1	Cover-Connector
8	32144-4	2	Screw-HWH
10	3296-42	2	Nut-Lock, NI
11	119-8952	6	Washer
12	130-0790-03	1	Bracket-Mount, Brake
13	94-4496	2	Screw-PPH

Seat Assembly

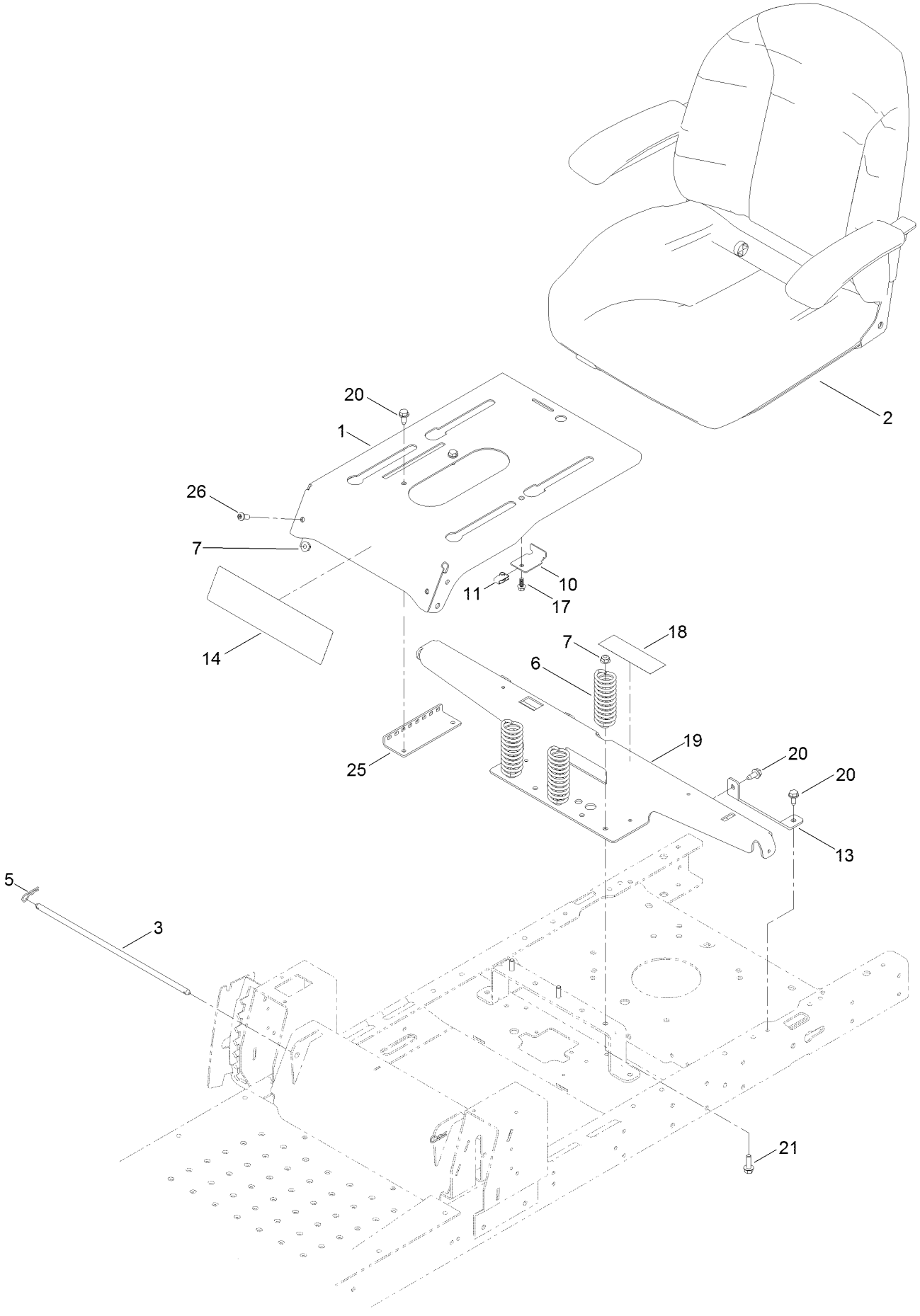

Seat Assembly (continued)

Ref.	Part Number	Qty.	Description
1	132-0919-03	1	Pan-Seat
2	131-4147	1	Seat ASM
3	119-3433	1	Rod-Pivot, Narrow
5	3290-250	2	Pin-Cotter
6	92-7054	3	Spring-Compression
7	104-8300	5	Nut-HF, NI
10	131-1038	1	Bracket-Stop, Seat
11	107069	1	Clip
13	119-3431-03	2	Support-Tank, Rear
14	131-3659	1	Decal-Timecutter
17	99-6810	1	Screw-HHF
18	106-8717	1	Decal-Service, CE
19	131-1040-03	1	Support-Pod
20	32144-70	6	Screw-HWHTF
21	3234-29	3	Screw-HHF
25	131-4008-03	1	Bracket-Latch, Seat
26	131-4080	2	Screw-HSBH

Seat Assembly No. 131-4147

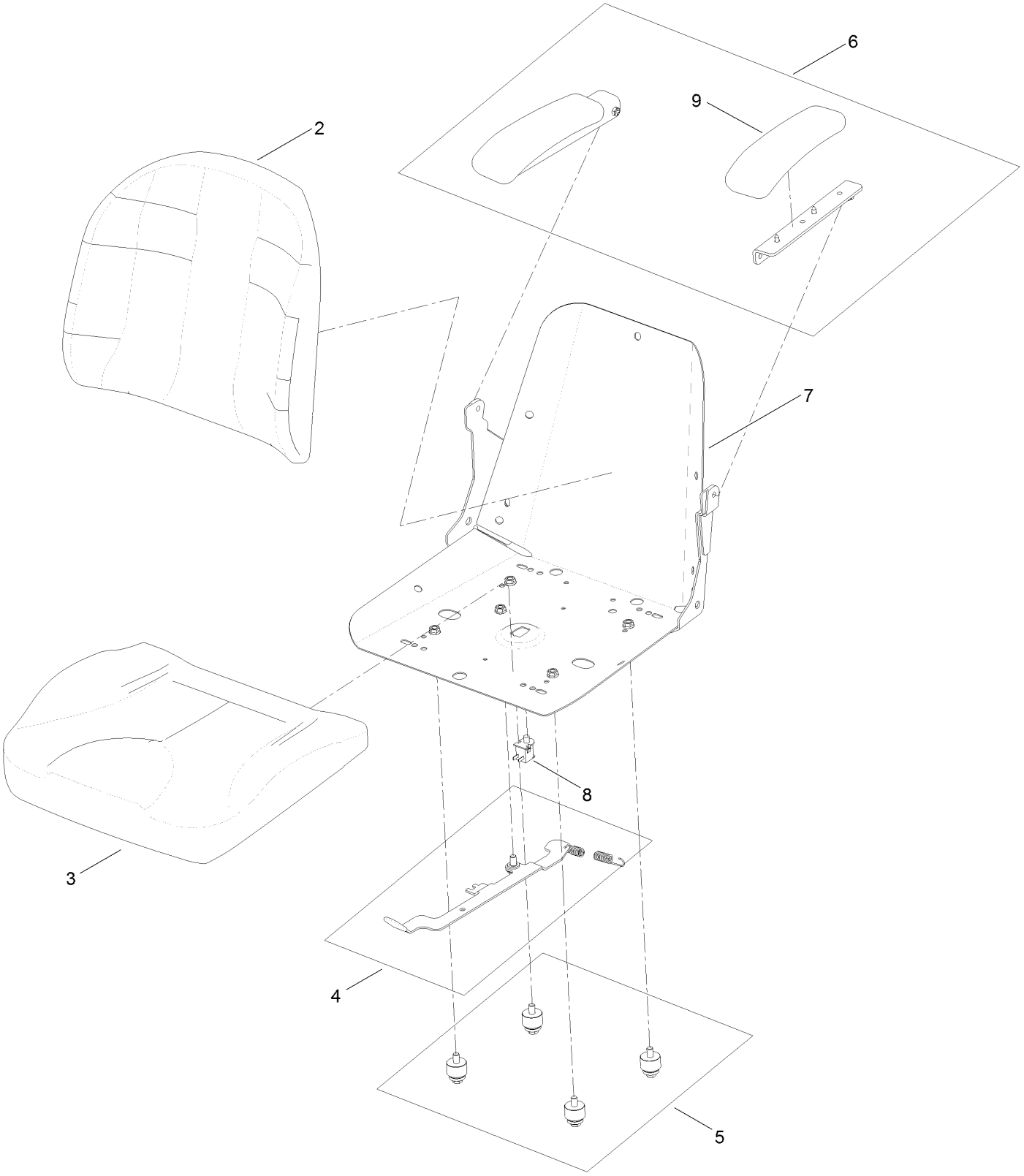

Seat Assembly No. 131-4147 (continued)

Ref.	Part Number	Qty.	Description
2	131-4149	1	Cushion-Seat, Back
3	131-4151	1	Cushion-Seat, Bottom
4	131-4153	1	Track ASM
5	131-4154	1	Bushing ASM
6	131-4155	1	Armrest Kit
7	131-4156	1	Shell
8	82-2190	1	Switch-Bail
9	110-4163	2	Cushion-Rest, Arm

Belt and Idler Assembly

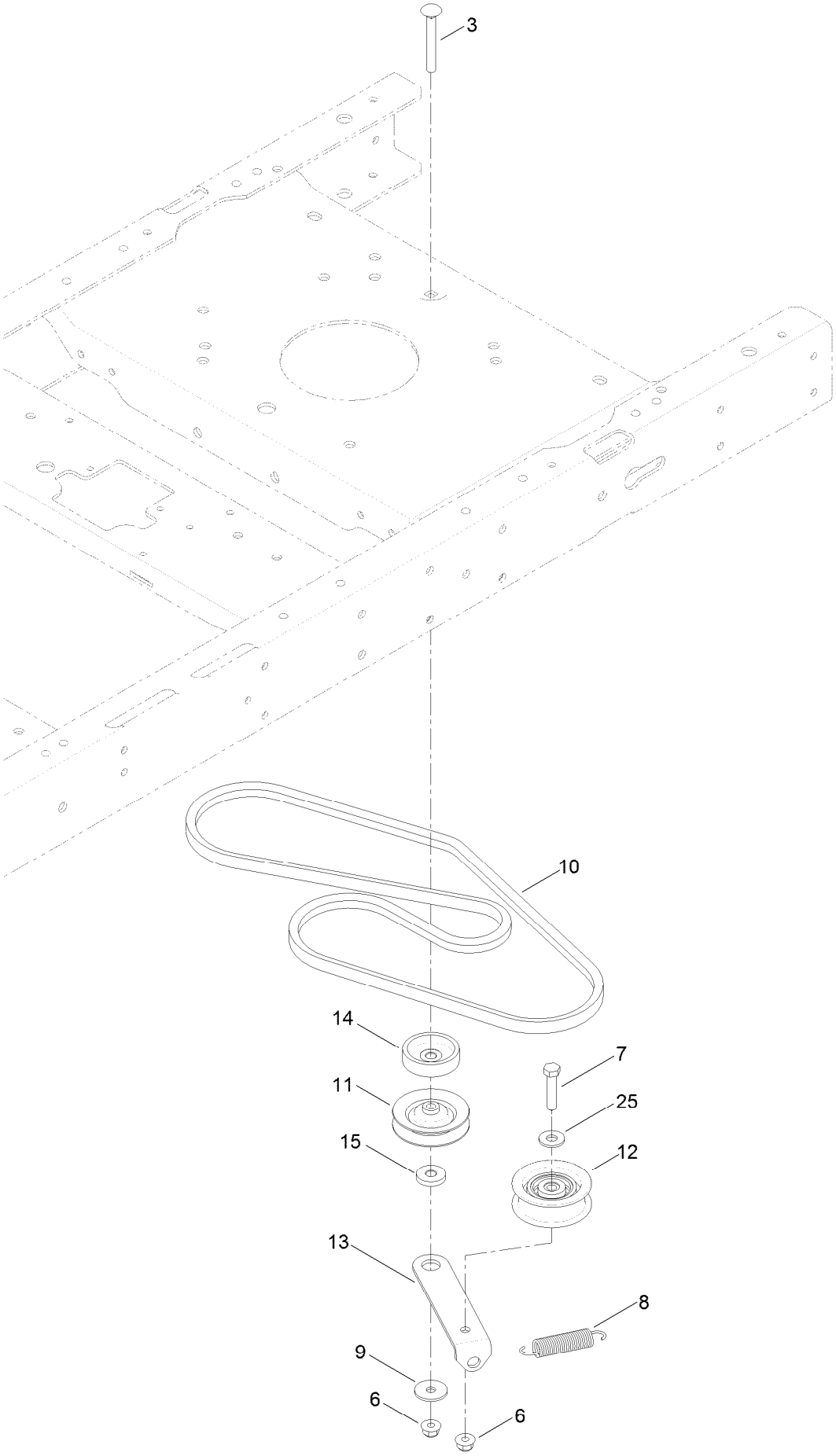

Belt and Idler Assembly (continued)

Ref.	Part Number	Qty.	Description
3	3230-8	1	Screw-CARR
6	104-8300	2	Nut-HF, NI
7	322-7	1	Screw-HH
8	104-6415	1	Spring-Return, Pedal
9	5-4460	1	Washer-Pivot
10	130-6975	1	V-Belt
11	119-8822	1	Pulley-Idler
12	106-2176	1	Pulley-Idler
13	119-3326	1	Arm-Idler
14	119-3353	1	Spacer
15	119-3327	1	Spacer-Arm, Idler
25	3256-3	1	Washer-Flat

Steering Column Assembly

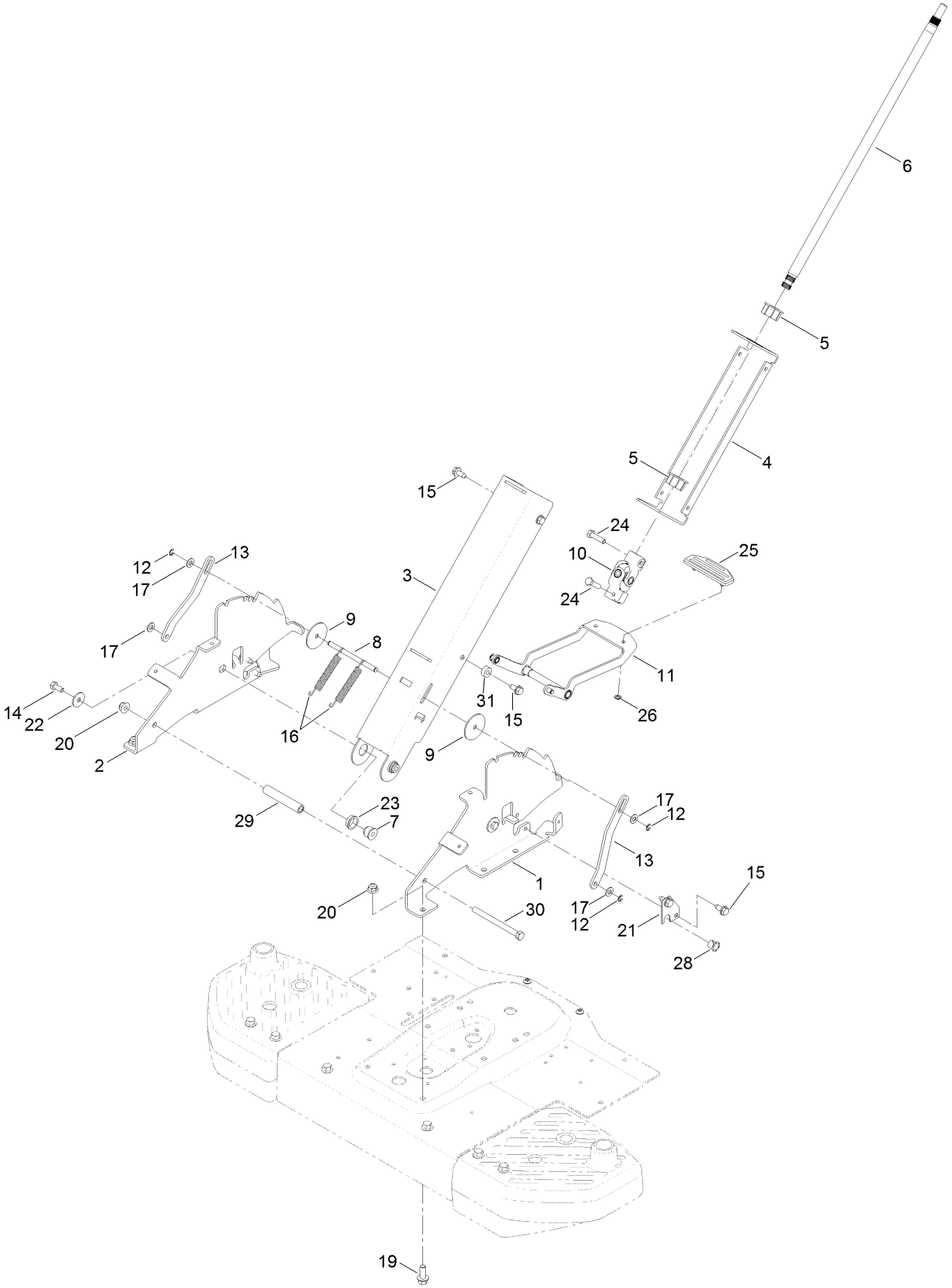

Steering Column Assembly (continued)

Ref.	Part Number	Qty.	Description
1	131-1052-03	1	Bracket-Pivot, Column (LH)
2	131-1053-03	1	Bracket-Pivot, Column (RH)
3	131-1054-01	1	Column-Front
4	131-1055-01	1	Column-Back
5	93-1146	2	Bushing-Steering, Upper
6	125-5507	1	Shaft-Steering, Upper
7	131-1056	2	Spacer-Pivot, Column
8	131-1050	1	Rod-Plunger
9	131-8729	2	Washer-Shaft, Tilt
10	131-1030	1	U-Joint ASM
11	131-7726	1	Release Pedal ASM
12	701197	4	E-Ring
13	131-1049	2	Plate-Plunger
14	322-3	2	Screw-HH
15	32144-70	8	Screw-HWHTF
16	130-6998	2	Spring-Extension
17	3256-23	4	Washer-Plain
19	3234-11	6	Screw-HHF
20	104-8301	7	Nut-HF, NI
21	131-1043	2	Plate-Retainer
22	5-4460	2	Washer-Pivot
23	99-4243	2	Bushing-Flange
24	322-6	2	Screw-HH
25	131-4096	1	Pad-Tilt Pedal
26	32112-6	2	Nut-Push
28	256-257	2	Bushing-Nyliner
29	131-3697	1	Spacer
30	323-23	1	Screw-HH
31	121-1759	2	Spacer

Steering Cable Assembly

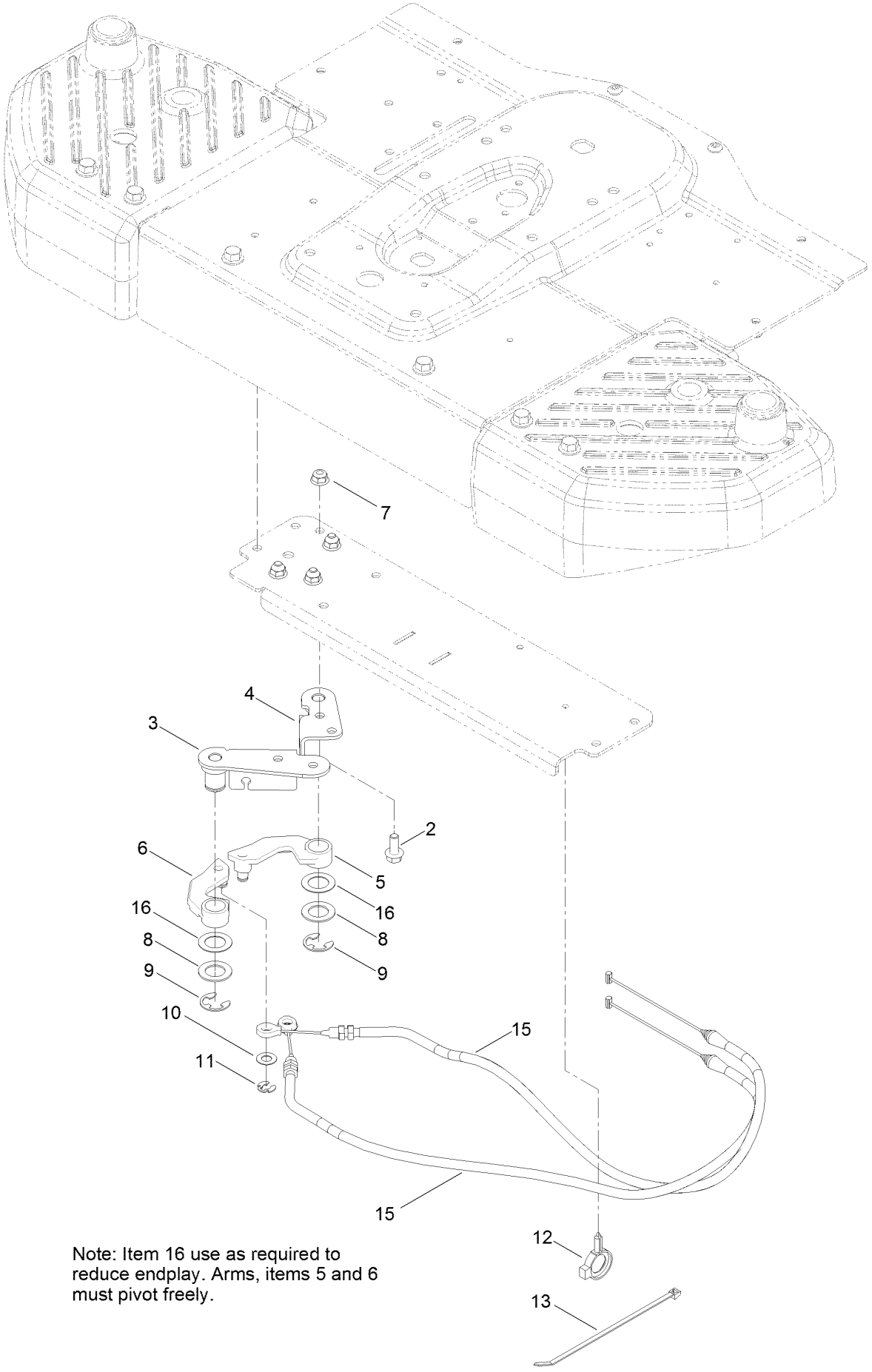

Note: Item 16 use as required to reduce endplay. Arms, items 5 and 6 must pivot freely.

Steering Cable Assembly (continued)

Ref.	Part Number	Qty.	Description
2	3234-47	4	Screw-HHF
3	131-3952	1	Cable Bracket ASM
4	131-3953	1	Cable Bracket ASM
5	131-3623	1	Arm-Cable, RH
6	131-3647	1	Arm-Cable, LH
7	104-8300	4	Nut-HF, NI
8	119-7640	2	Washer-Thrust
9	32151-48	2	E-Ring
10	37-8080	2	Washer-Thrust
11	32151-47	2	Ring-Retaining
12	105-1853	1	Clamp-Hose
13	614249	1	Tie-Cable
15	127-0118	2	Cable-Steering
16	3-6498	2	Washer-Thrust

Gear Assembly

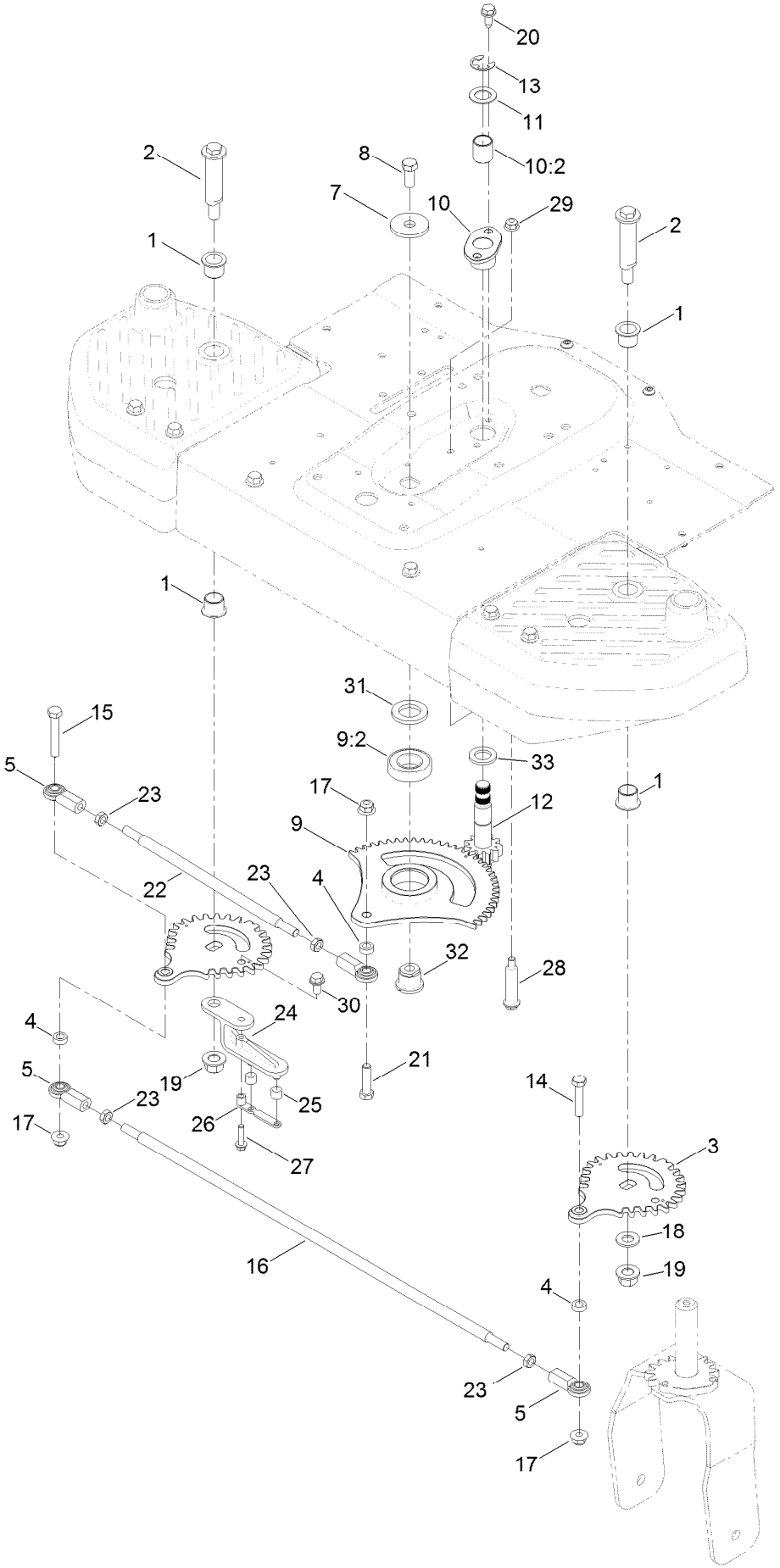

Gear Assembly (continued)

Ref.	Part Number	Qty.	Description
1	103-4398	4	Bearing-Flange, Iglide
2	131-1031	2	Bolt-Shoulder
3	130-0830	2	Gear-Wheel, 30 Tooth
4	83-1050	3	Spacer
5	103-0608	4	Joint-Ball, End
7	84-1560	1	Washer-Thrust
8	324-4	1	Screw-HH
9	131-8731	1	Sector Gear ASM
9:2	109-3678	1	Bearing-Ball
10	131-8733	1	Flange Bearing ASM
10:2	115-7019	1	Bushing-Straight
11	119-7640	1	Washer-Thrust
12	125-5508	1	Lower Steering Shaft ASM
13	32151-48	1	E-Ring
14	323-9	1	Screw-HH
15	323-11	1	Screw-HH
16	131-1035	1	Rod-Cross, Narrow
17	104-8301	3	Nut-HF, NI
18	3256-26	1	Washer-Flat
19	99-5107	2	Nut-Lock
20	32144-70	2	Screw-HWHTF
21	323-8	1	Screw-HH
22	131-1036	1	Rod-Steering, Narrow
23	3220-3	4	Nut-HJ
24	130-6878	1	Lever-Cable
25	131-3951	2	Bushing
26	131-3950	1	Strap-Roller
27	32144-86	1	Screw-HWHTF
28	100-9880	1	Bolt-Shoulder
29	104-8300	1	Nut-HF, NI
30	32144-14	1	Screw-HWHTF
31	131-8736	1	Spacer-Bearing
32	131-8737	1	Pivot-Bearing
33	70-1160	1	Washer

Steering Assembly

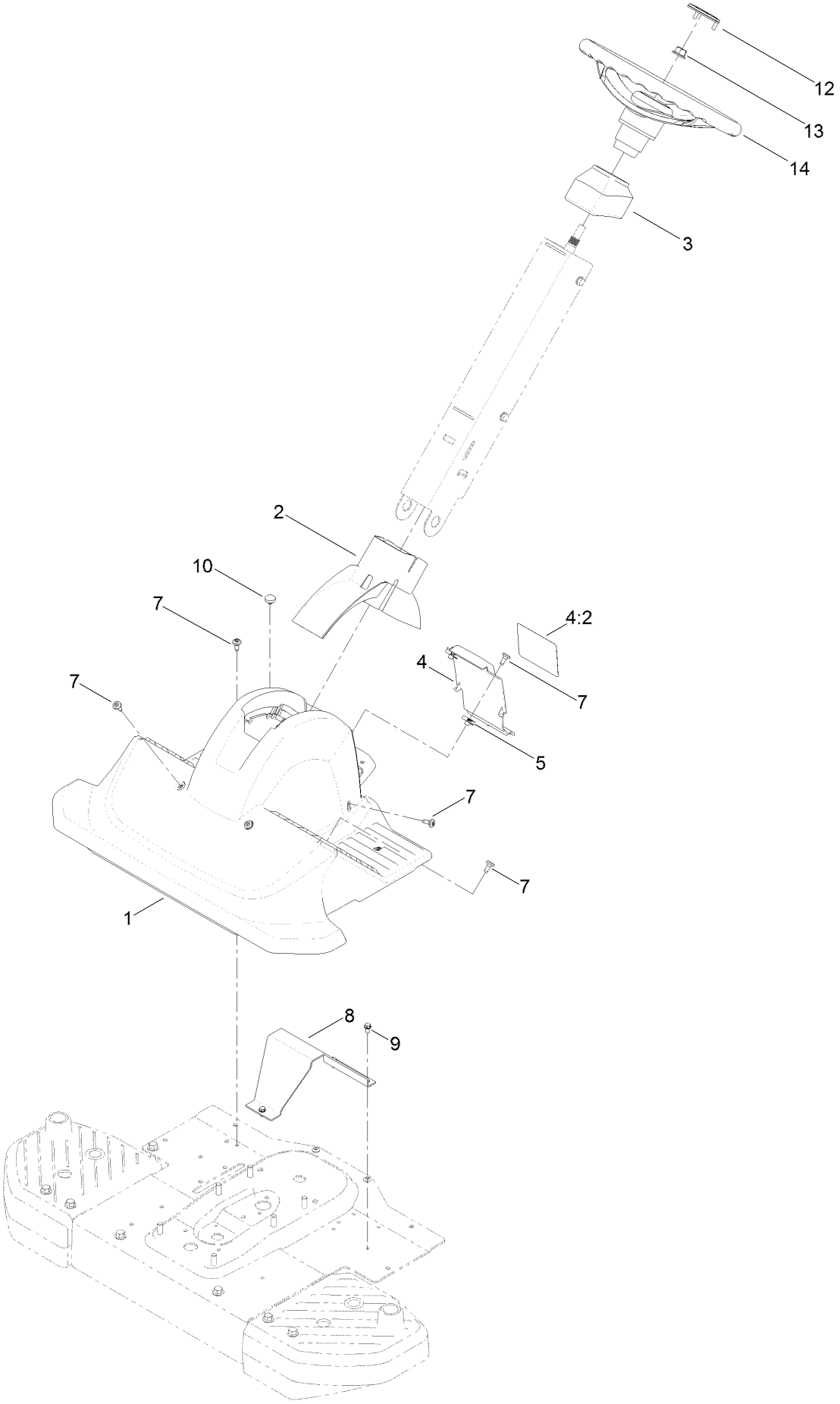

Steering Assembly (continued)

Ref.	Part Number	Qty.	Description
1	131-1070	1	Shroud
2	131-1028	1	Cover-Pivot, Column
3	131-1066	1	Cap-Column
4	131-4099	1	Rear Cover And Decal ASM
4:2	132-0870	1	Decal-Danger
5	107069	2	Clip
7	120-7950	9	Screw-Torx
8	131-1029-03	1	Support-Footrest
9	32144-4	3	Screw-HWH
10	1-513658	1	Bumper
12	131-3630	1	Cap-Wheel, Steering
13	99-5107	1	Nut-Lock
14	131-0957	1	Wheel-Steering

Hydro Transaxle Drive and Rear Wheel Assembly

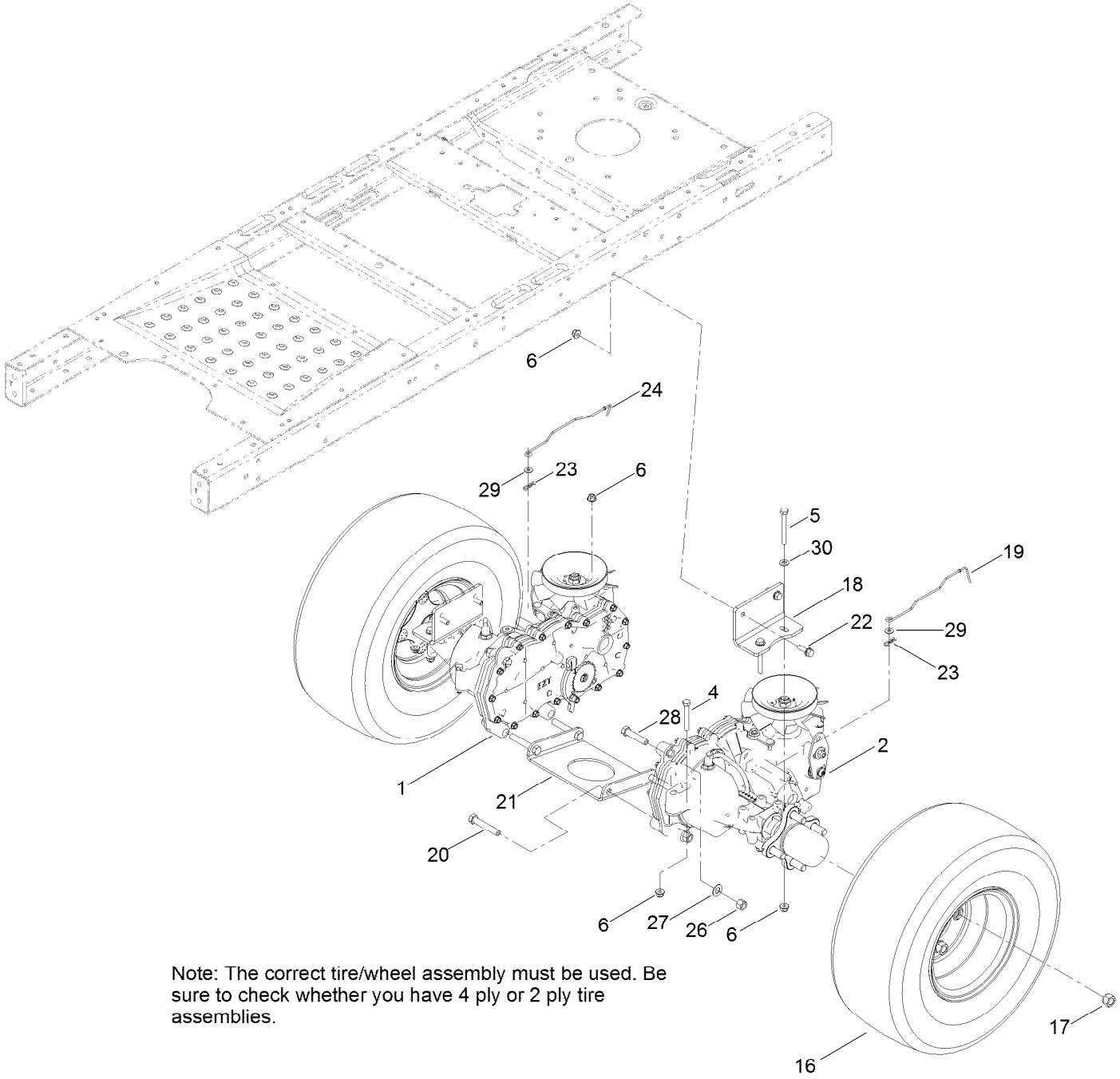

Note: The correct tire/wheel assembly must be used. Be sure to check whether you have 4 ply or 2 ply tire assemblies.

Hydro Transaxle Drive and Rear Wheel Assembly (continued)

Ref.	Part Number	Qty.	Description
1	119-3341	1	RH Hydro Transaxle ASM
2	119-3340	1	LH Hydro Transaxle ASM
4	322-11	4	Screw-HH
5	322-13	4	Screw-HH
6	104-8300	12	Nut-HF, NI
16	120-5523	2	4 Ply Wheel And Tire ASM
16	131-3671	2	2 Ply Wheel And Tire ASM
17	242-50	8	Nut-Lug
18	117-7264-03	2	Mount-Hydro
19	131-0900	1	*obs* Rod-Bypass, LH
20	324-10	4	Screw-HH
21	119-3339-03	1	Plate-Cross, Hydro
22	3234-29	4	Screw-HHF
23	3290-307	2	Pin-Cotter
24	130-7049	1	Rod-Bypass, RH
26	3296-48	6	Nut-Hex
27	3256-25	6	Washer-Flat
28	324-8	2	Screw-HH
29	119-8952	2	Washer
30	3256-23	6	Washer-Plain

4 Ply Wheel and Tire Assembly No. 120-5523

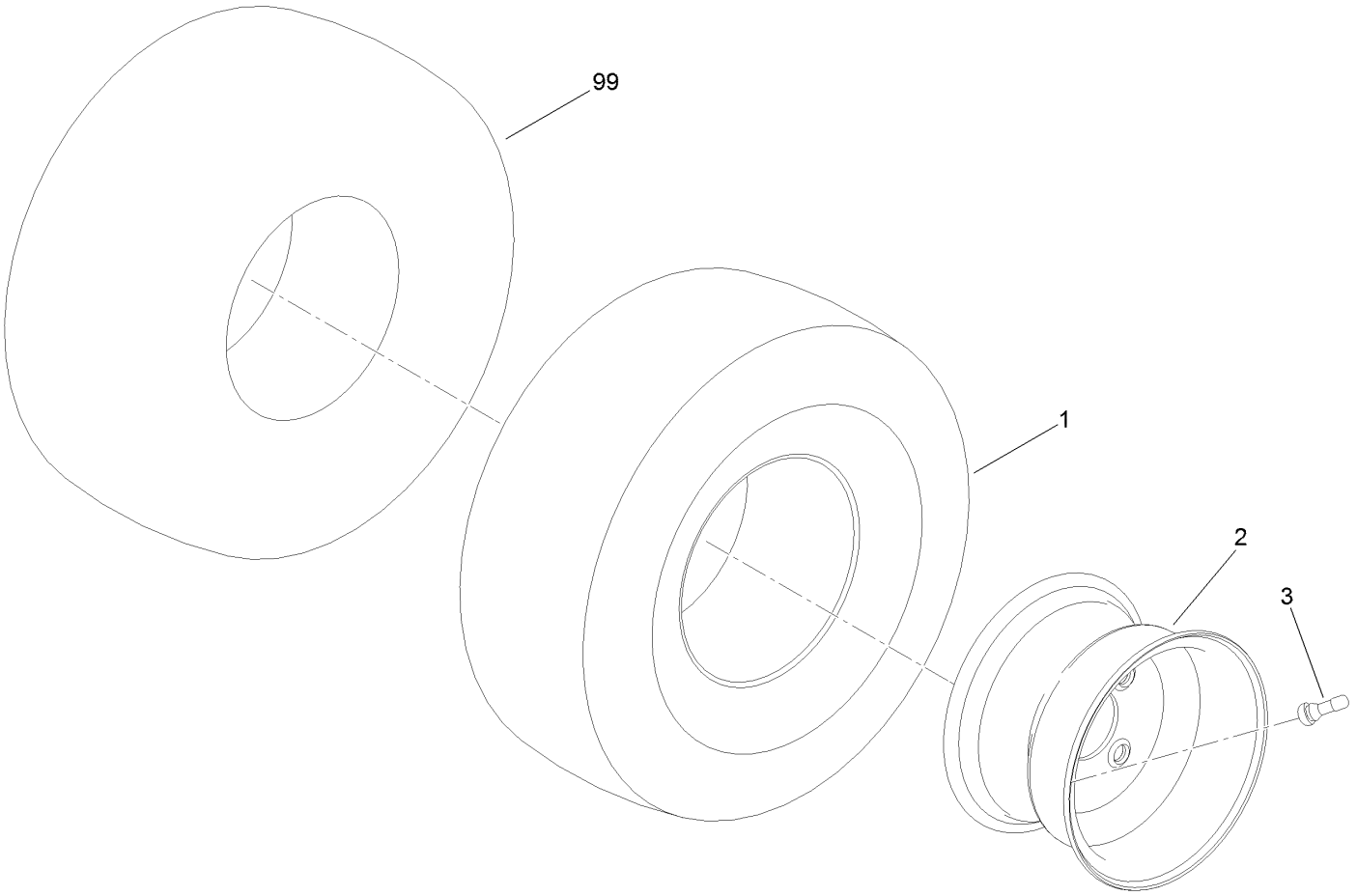

4 Ply Wheel and Tire Assembly No. 120-5523 (continued)

Ref.	Part Number	Qty.	Description
1	119-8907	1	Tire-4 Ply
2	107-2475	1	Wheel
3	232-27	1	Stem-Valve
99	107-2491	1	Tube-Tire

2 Ply Wheel and Tire Assembly No. 131-3671

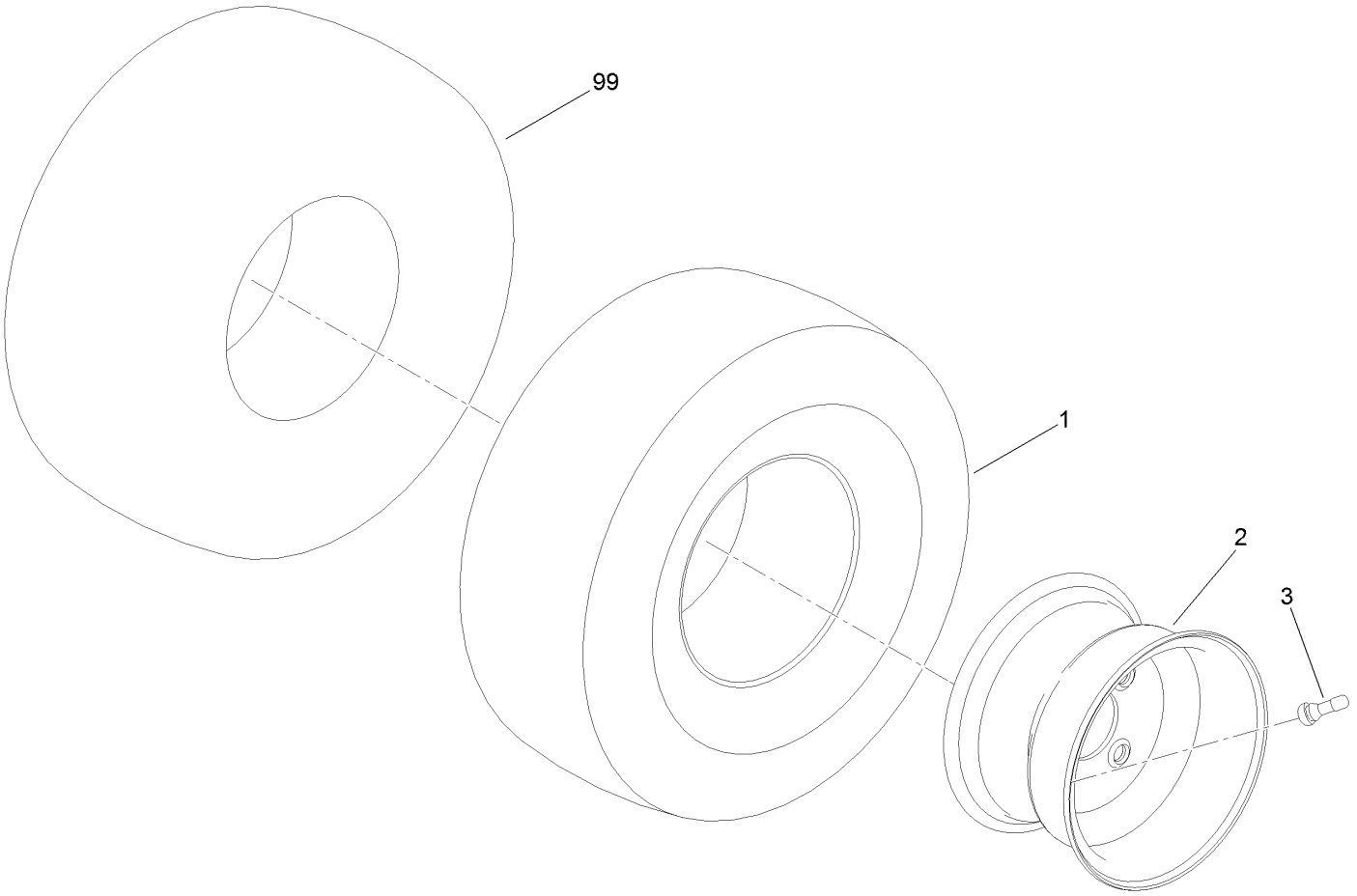

2 Ply Wheel and Tire Assembly No. 131-3671 (continued)

Ref.	Part Number	Qty.	Description
1	131-3678	1	Tire-2 Ply
2	131-3674	1	Wheel
3	232-27	1	Stem-Valve
99	107-2491	1	Tube-Tire

Clutch Assembly

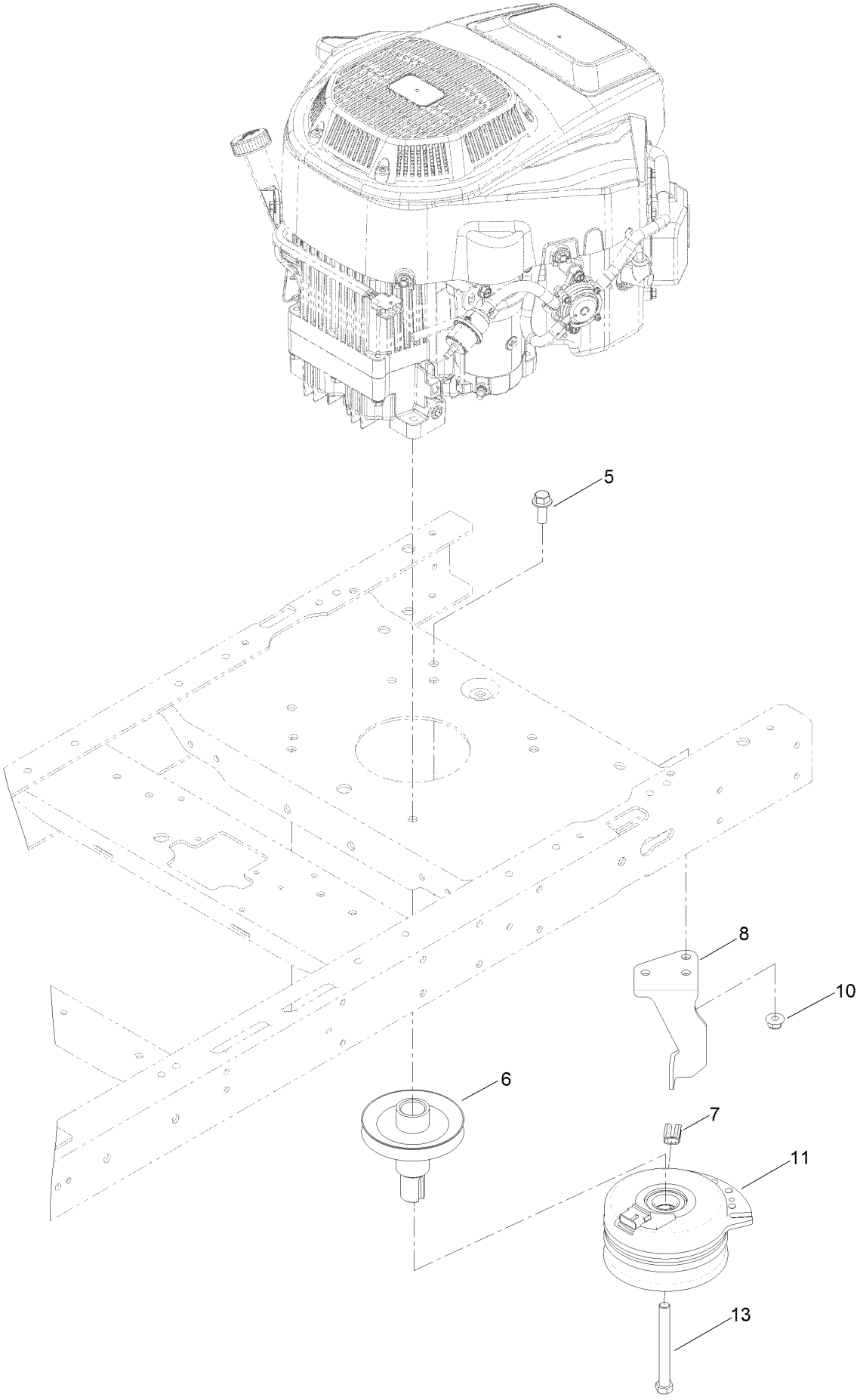

Clutch Assembly (continued)

Ref.	Part Number	Qty.	Description
5	3234-42	1	Screw-HHF
6	130-6854	1	Pulley-Engine
7	120-2217	1	Isolator-Clutch
8	119-8884	1	Stop-Clutch (Narrow)
10	104-8301	1	Nut-HF, NI
11	117-7468	1	Clutch-Electric
13	3212-16	1	Screw-HH

Battery and Electrical Assembly

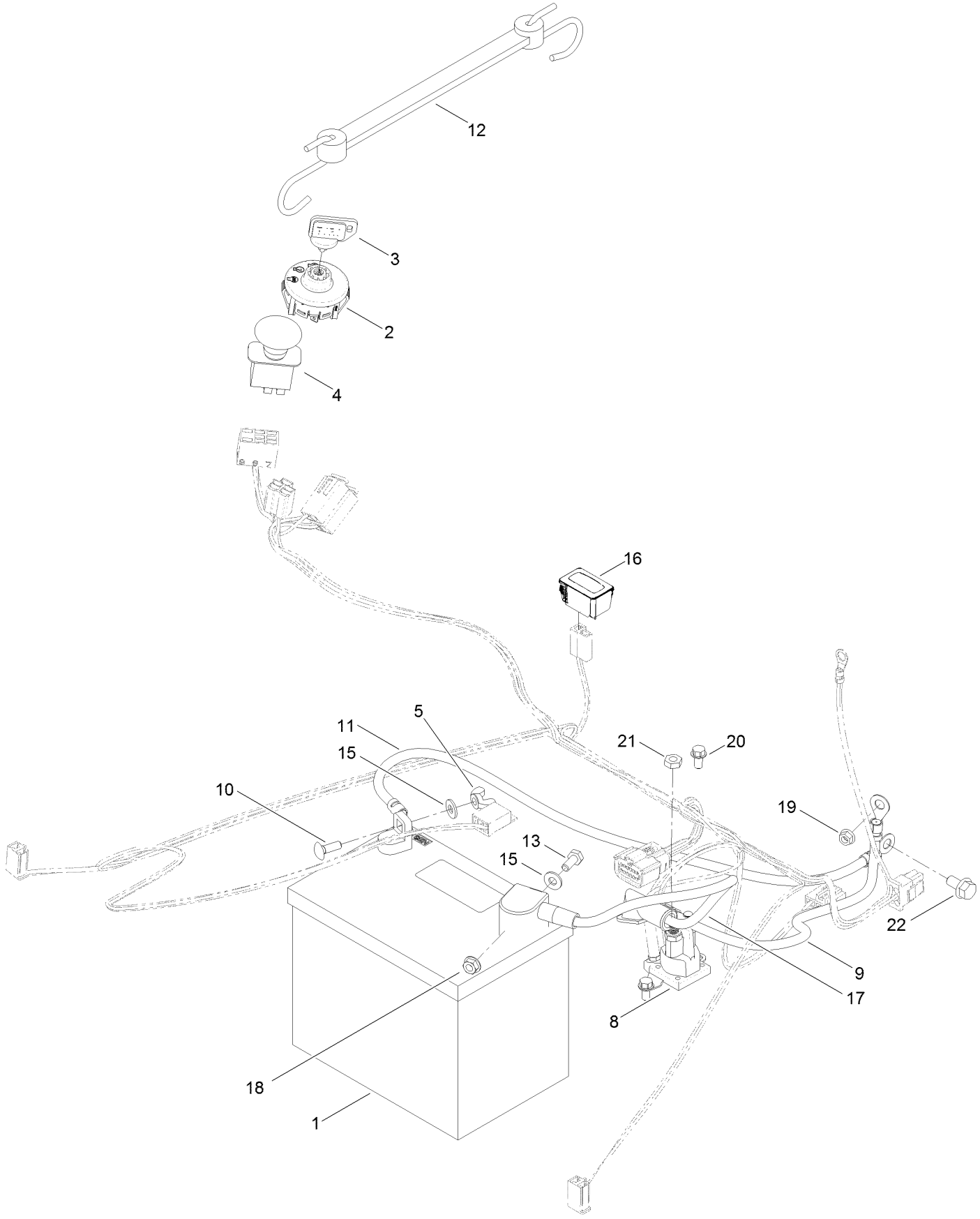

Battery and Electrical Assembly (continued)

Ref.	Part Number	Qty.	Description
1	105-1692	1	Battery, 230CCA W/O Electrolyte
2	117-2221	1	Switch-Ignition
3	63-8360	1	Key-Ignition
4	114-0279	1	Switch-PTO, On-On
5	32103-22	1	Nut-Wing
8	117-1197	1	Solenoid
9	121-0711	1	Cable-Battery, Positive
10	3229-1	1	Screw-CARR
11	119-8899	1	Cable-Battery, Black
12	104-2466	1	Holddown-Battery
13	321-3	1	Screw-HH
15	3256-22	2	Washer-Flat
16	120-2244	1	Hourmeter
17	119-8897	1	Cable-Battery, Red
18	32128-33	1	Nut-HF
19	33003-00	1	Nut-HF
20	32144-4	2	Screw-HWH
21	3220-2	2	Nut-Jam
22	3234-14	1	Screw-HHF

Wire Harness Assembly

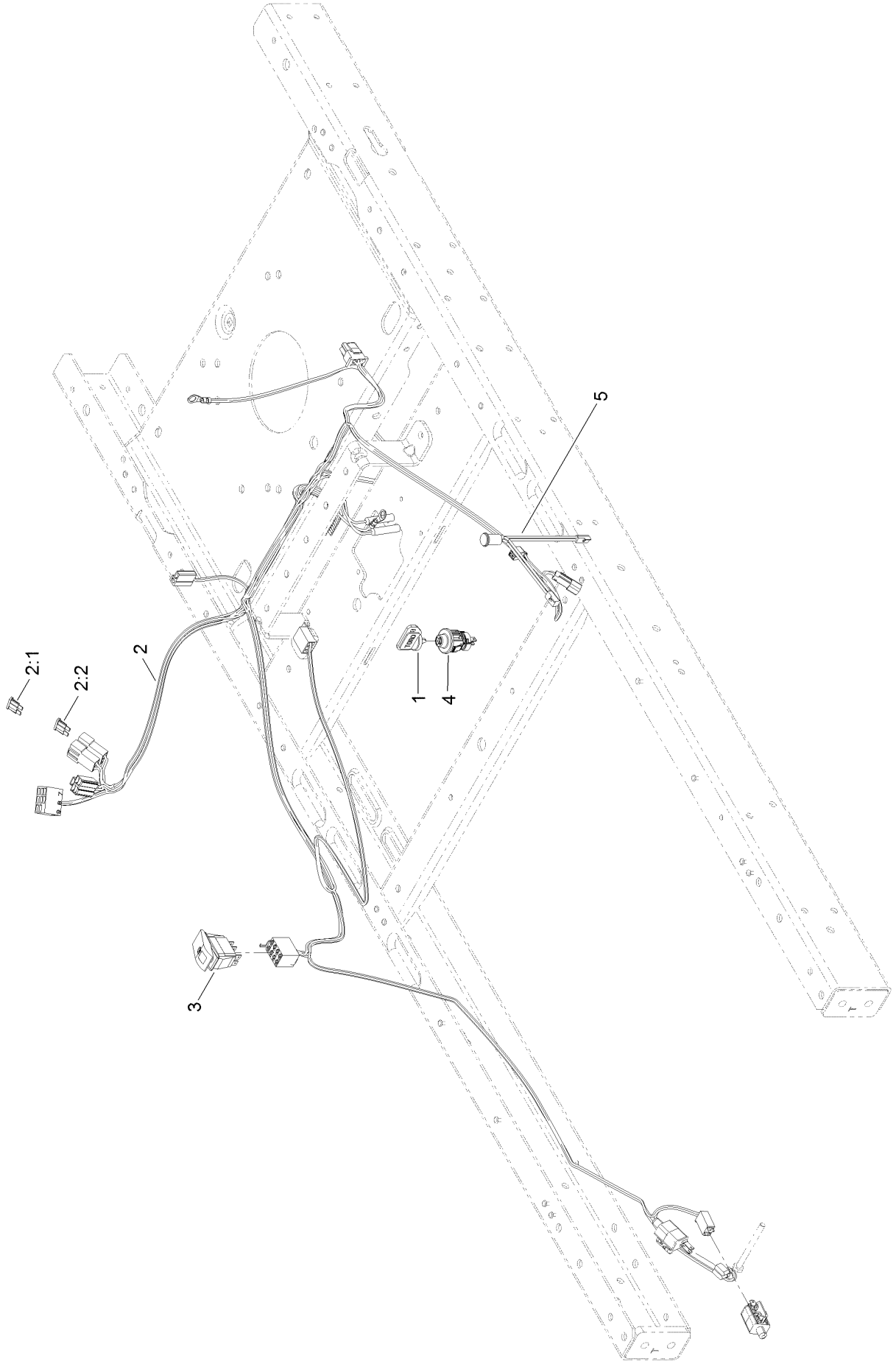

Wire Harness Assembly (continued)

Ref.	Part Number	Qty.	Description
1	131-3639	1	Key-Toro
2	130-6918	1	Harness-Wire
2:1	109103	1	Fuse-Blade, 30 Amp
2:2	109102	1	Fuse-Blade, 25 Amp
3	130-6874	1	Switch-Rocker, (On)-Off-(On)
4	119-3068	1	Switch-Momentary, N.O.
5	131-4136	1	Light-Indicator

Speed Control Assembly

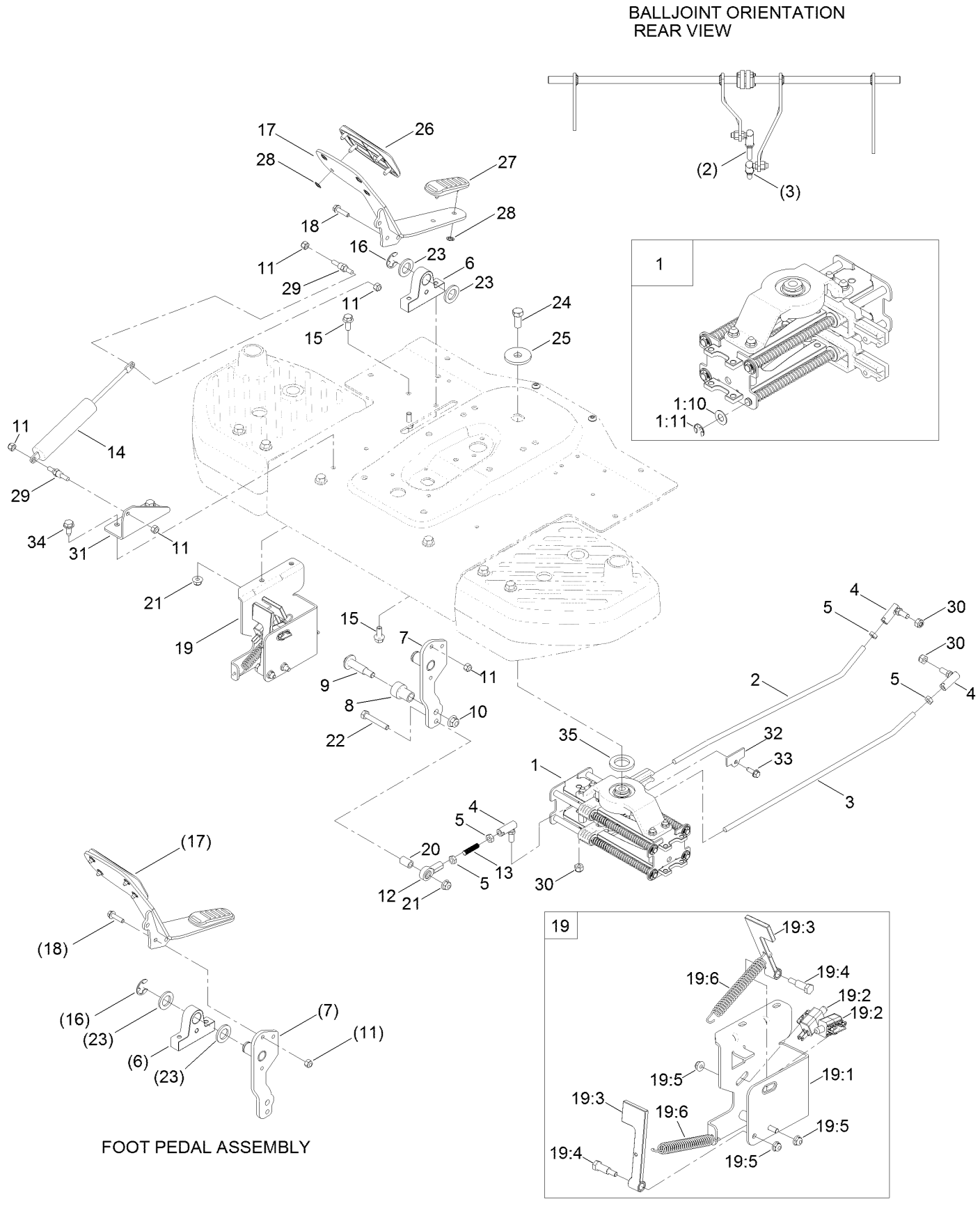

FOOT PEDAL ASSEMBLY

Speed Control Assembly (continued)

Ref.	Part Number	Qty.	Description
1	131-0904	1	Speed Control ASM
1:10	131-8667	12	Washer-Thrust
1:11	32120-18	8	E-Ring
2	127-0115	1	Rod-Hydro, RH
3	127-0116	1	Rod-Hydro, LH
4	2411-33	3	Balljoint-RH (W/Grommet)
5	3220-2	4	Nut-Jam
6	130-6887	1	Mount-Pedal Pivot
7	125-5517	1	Pivot Lever ASM
8	127-3397	1	Roller
9	56-6590	1	Bolt-Wheel
10	104-8301	1	Nut-HF, NI
11	3296-42	6	Nut-Lock, NI
12	1-543017	1	Balljoint-RH
13	130-6906	1	Rod-Threaded
14	131-0958	1	Damper-Non Cavitating
15	3234-47	4	Screw-HHF
16	32151-48	1	E-Ring
17	125-3065-01	1	Pedal-Traction
18	120-4654	2	Screw-HHF
19	131-0903	1	Neutral Return ASM
19:1	132-0909-03	1	Bracket-Switch
19:2	110-6765	2	Switch
19:3	130-0782	2	Arm-Switch
19:4	119-2309	2	Bolt-Shoulder
19:5	104-7201	3	Nut-HF
19:6	120-7027	2	Spring-Extension
20	131-1034	1	Spacer
21	104-8300	3	Nut-HF, NI
22	322-10	1	Screw-HH
23	70-1160	2	Washer
24	324-4	1	Screw-HH
25	84-1560	1	Washer-Thrust
26	98-9040	1	Pad-Toe, Hydro Pedal
27	98-9039	1	Pad-Heel, Hydro Pedal
28	32112-6	6	Nut-Push
29	110-6810	2	Stud-Damper
30	3296-4	3	Nut-Lock
31	130-6910-03	1	Bracket-Damper
32	131-1041	2	Cover-End Rod
33	32144-44	2	Screw-HWH, Thread Roll
34	32144-70	2	Screw-HWHTF
35	131-8736	1	Spacer-Bearing

Fuel Delivery Assembly

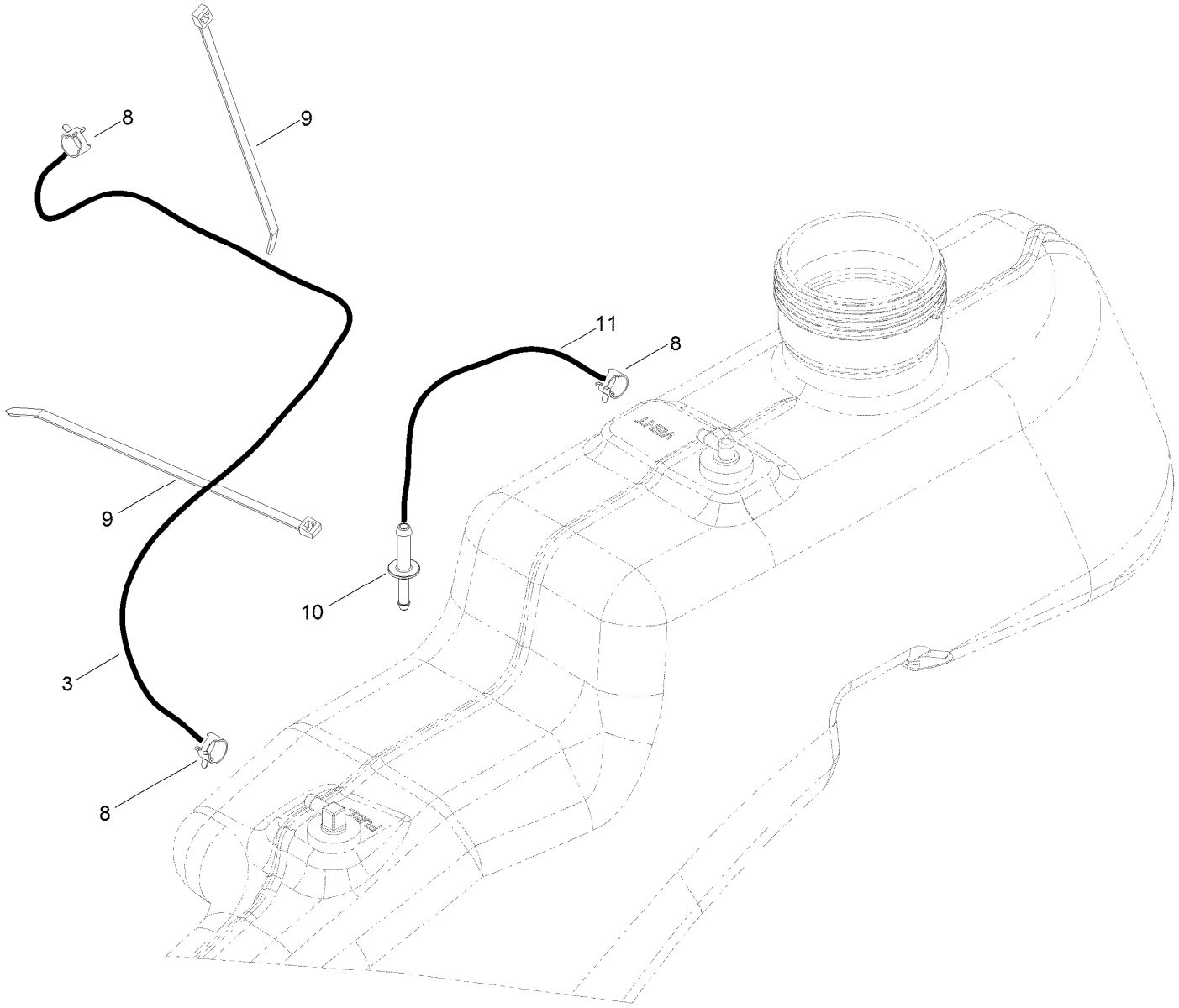

Fuel Delivery Assembly (continued)

Ref.	Part Number	Qty.	Description
3	109-0281	1	Hose-Fuel
8	2412-98	3	Clamp-Hose
9	614249	1	Tie-Cable
10	117-5399	1	Adaptor-Orifice
11	110-1876	1	Hose-Fuel

Engine and Muffler Assembly

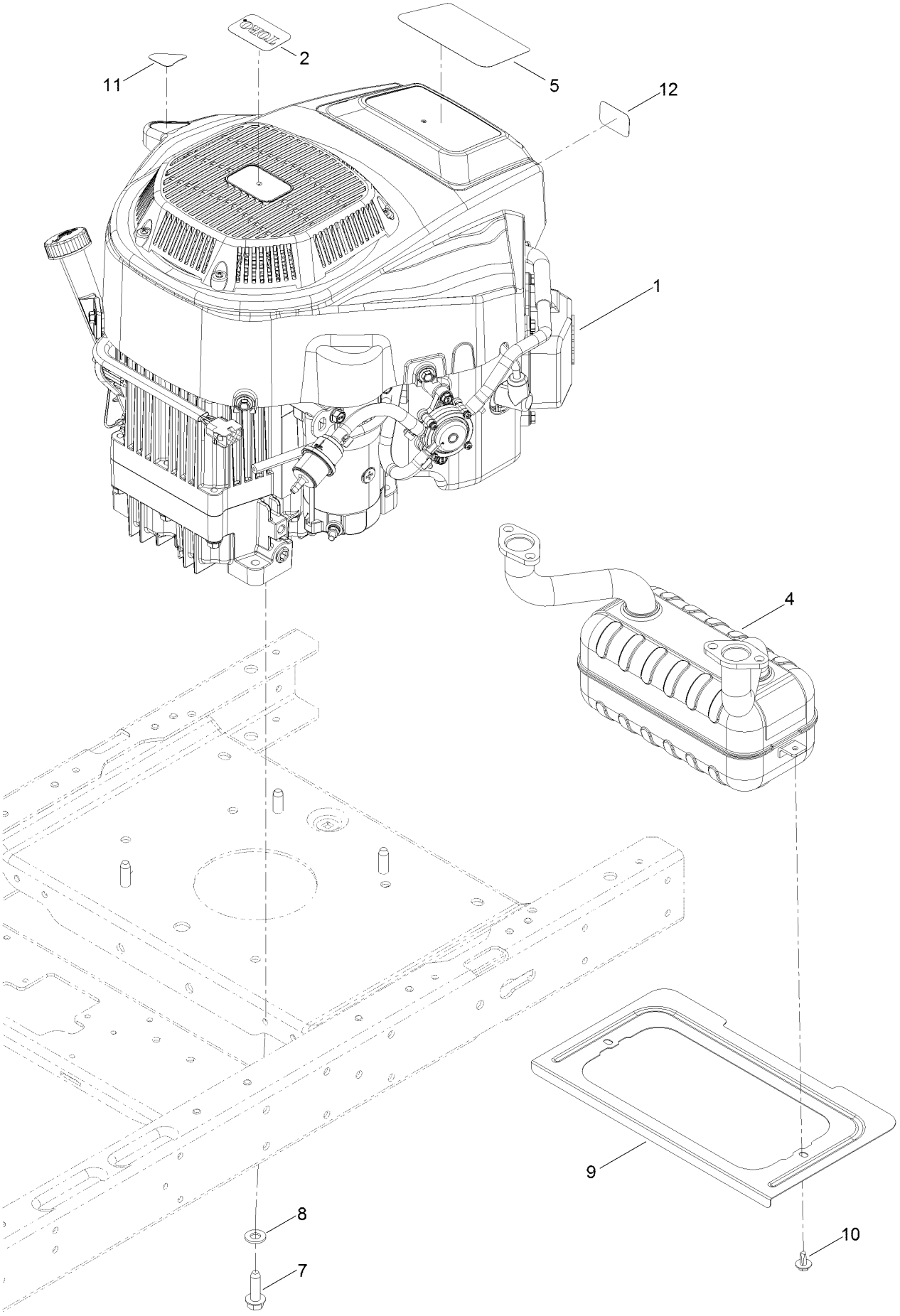

Engine and Muffler Assembly (continued)

Ref.	Part Number	Qty.	Description
1	127-9041	1	Engine-2P77F
2	131-4157	1	Decal
4	131-4188	1	Muffler
5	132-0902	1	Decal-Engine
7	32144-109	4	Screw-Thd
8	3256-24	3	Washer-Flat
9	131-1071-03	1	Shield-Heat
10	46-8560	2	Screw-HHFTF
11	131-1097	1	Decal-Drain, Oil
12	127-9076	1	Placard-Intake
99	127-9355	1	Sleeve-Fuel Line Protector ●

● Not illustrated

Fuel System Assembly
with Non-Canister Style Air Filter

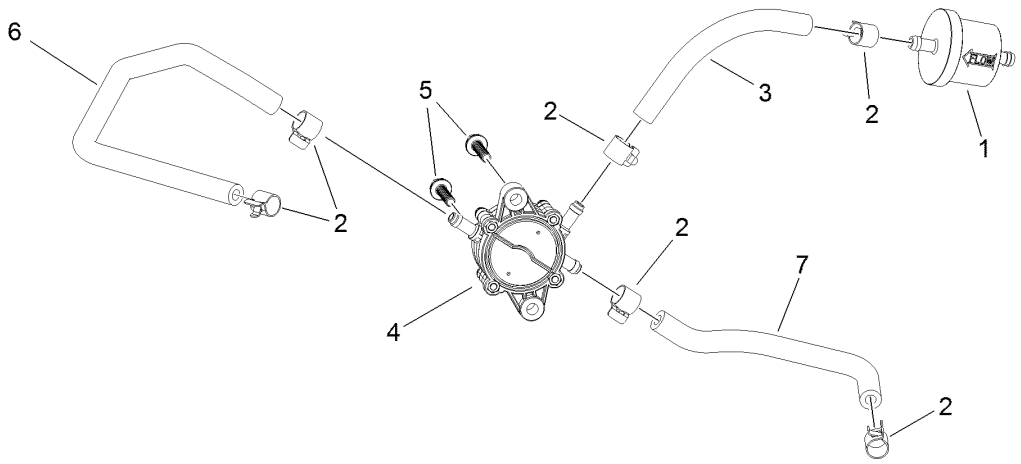

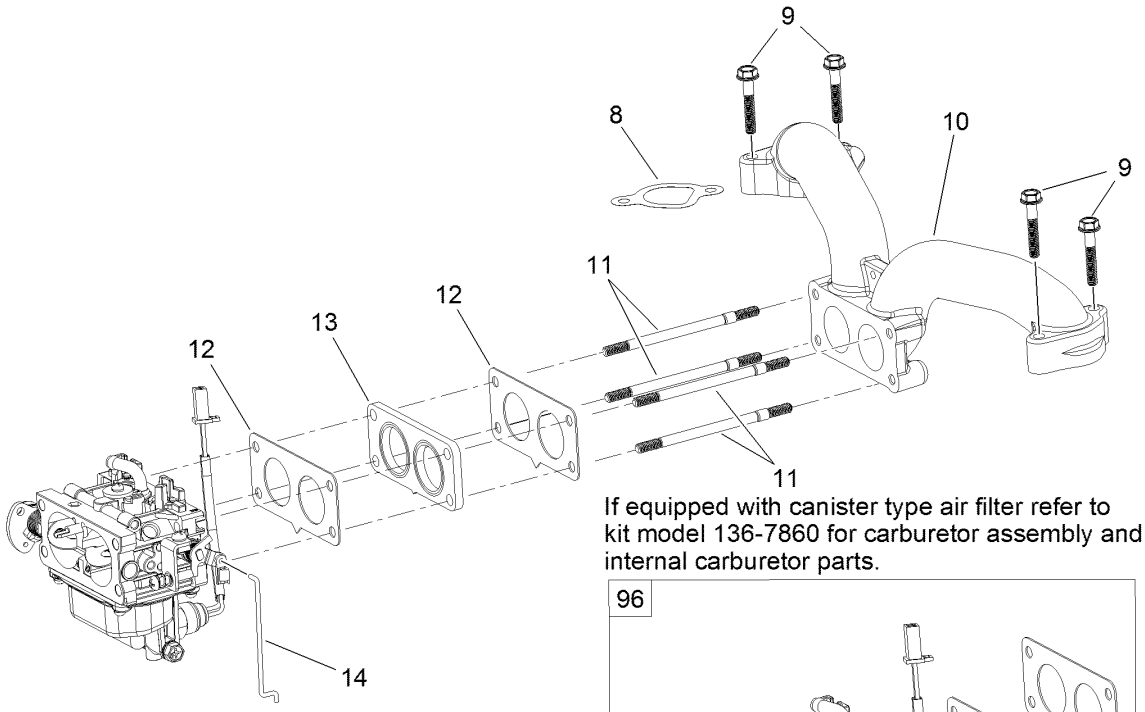

If equipped with canister type air filter refer to kit model 136-7860 for carburetor assembly and internal carburetor parts.

96

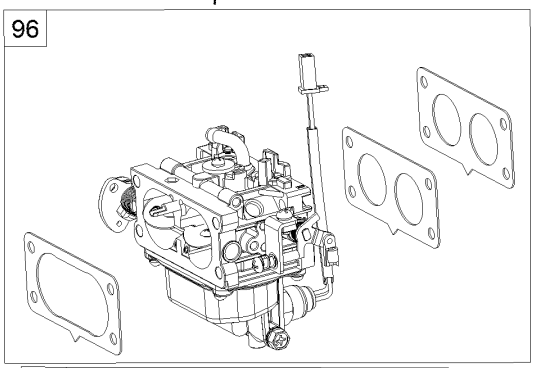

97

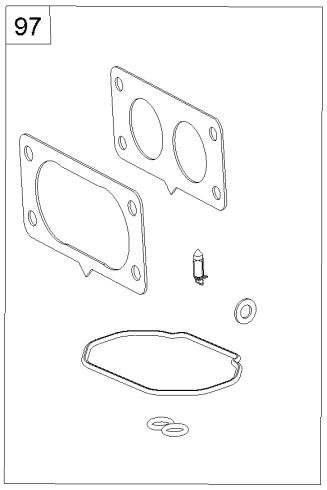

98

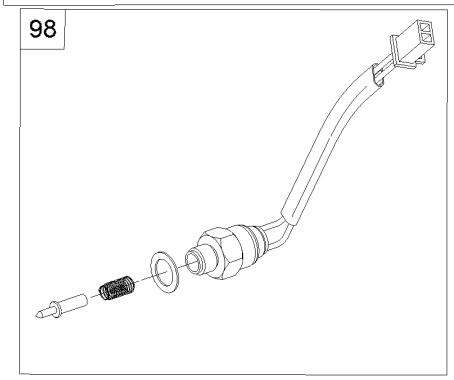

Fuel System Assembly with Non-Canister Style Air Filter (continued)

Ref.	Part Number	Qty.	Description
1	127-9204	1	Filter-Fuel
2	120-4251	6	Clamp-Fuel Line
3	120-4371	1	Line-Fuel
4	127-9206	1	Pump-Fuel
5	120-4225	2	Screw-HHF
6	127-9205	1	Hose-Fuel
7	127-9207	1	Hose-Fuel
8	127-9230	2	Gasket-Intake
9	120-4284	4	Screw-HHF
10	127-9244	1	Manifold-Intake
11	127-9245	4	Stud
12	127-9246	2	Gasket-Carburetor
13	127-9247	1	Insulator-Carburetor
14	127-9248	1	Linkage-Throttle
96	127-9289	1	Carburetor Replacement Kit
97	127-9290	1	Carburetor Repair Kit
98	127-9292	1	Solenoid Kit

Carburetor Assembly
with Non-Canister Style Air Filter

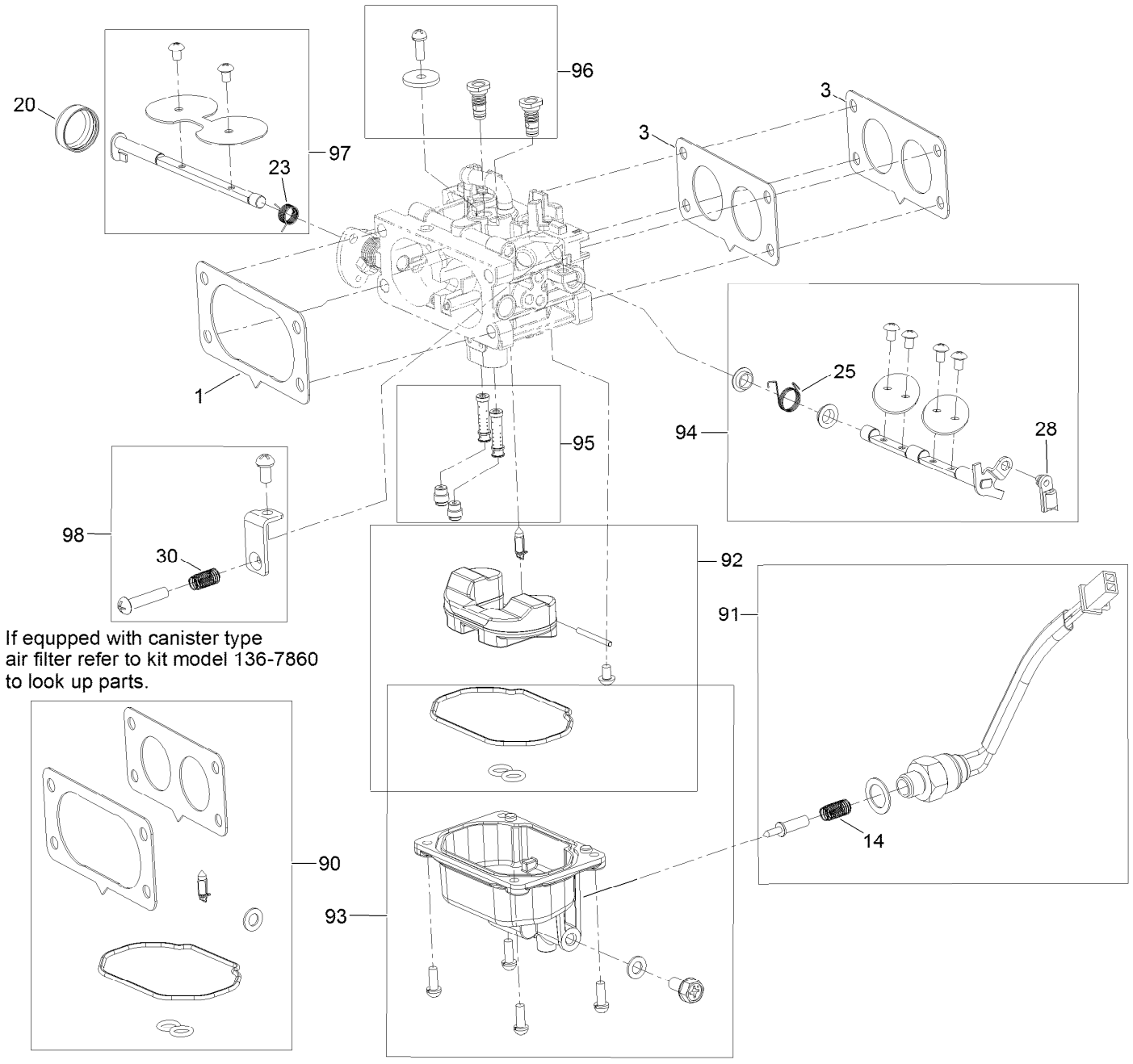

Carburetor Assembly with Non-Canister Style Air Filter (continued)

Ref.	Part Number	Qty.	Description
1	127-9249	1	Carburetor
1	127-9251	1	Gasket-Carburetor
3	127-9246	2	Gasket-Carburetor
14	127-9319	1	Spring
20	127-9325	1	Cover-Shaft, Choke
23	127-9328	1	Spring
25	127-9330	1	Spring
28	127-9333	1	Clamp-Lock
30	127-9335	1	Spring

Ref.	Part Number	Qty.	Description
90	127-9290	1	Carburetor Repair Kit
91	127-9292	1	Solenoid Kit
92	127-9340	1	Float Kit
93	127-9341	1	Bowl Kit
94	127-9342	1	Throttle Shaft Kit
95	127-9343	1	Nozzle And Jet Kit
96	127-9344	1	Air Jet Kit
97	127-9345	1	Choke Shaft Kit
98	127-9347	1	Idlestop Kit

Air Intake and Filtration Assembly with Non-Canister Style Air Filter

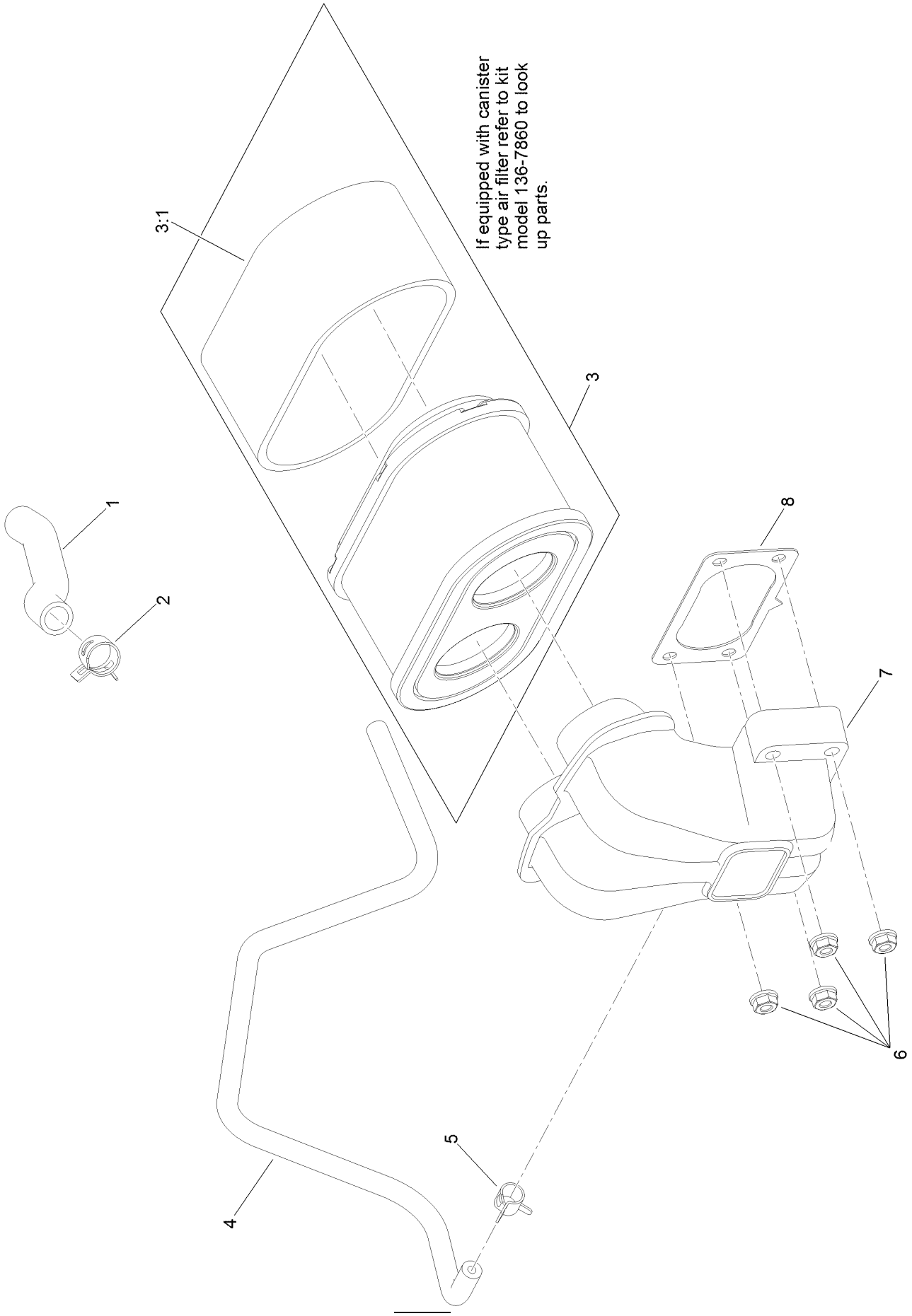

Air Intake and Filtration Assembly with Non-Canister Style Air Filter (continued)

Ref.	Part Number	Qty.	Description
1	127-9235	1	Tube-Breather
2	127-9234	2	Clamp-Hose
3	127-9252	1	Filter-Air, Complete
3:1	127-9288	1	Filter-Pre, Foam
4	127-9253	1	Hose-Fuel
5	127-9187	1	Clamp-Hose
6	120-4236	4	Nut-Flange
7	127-9047	1	Manifold-Filter, Air
8	127-9251	1	Gasket-Carburetor

Ignition and Electrical Assemlby

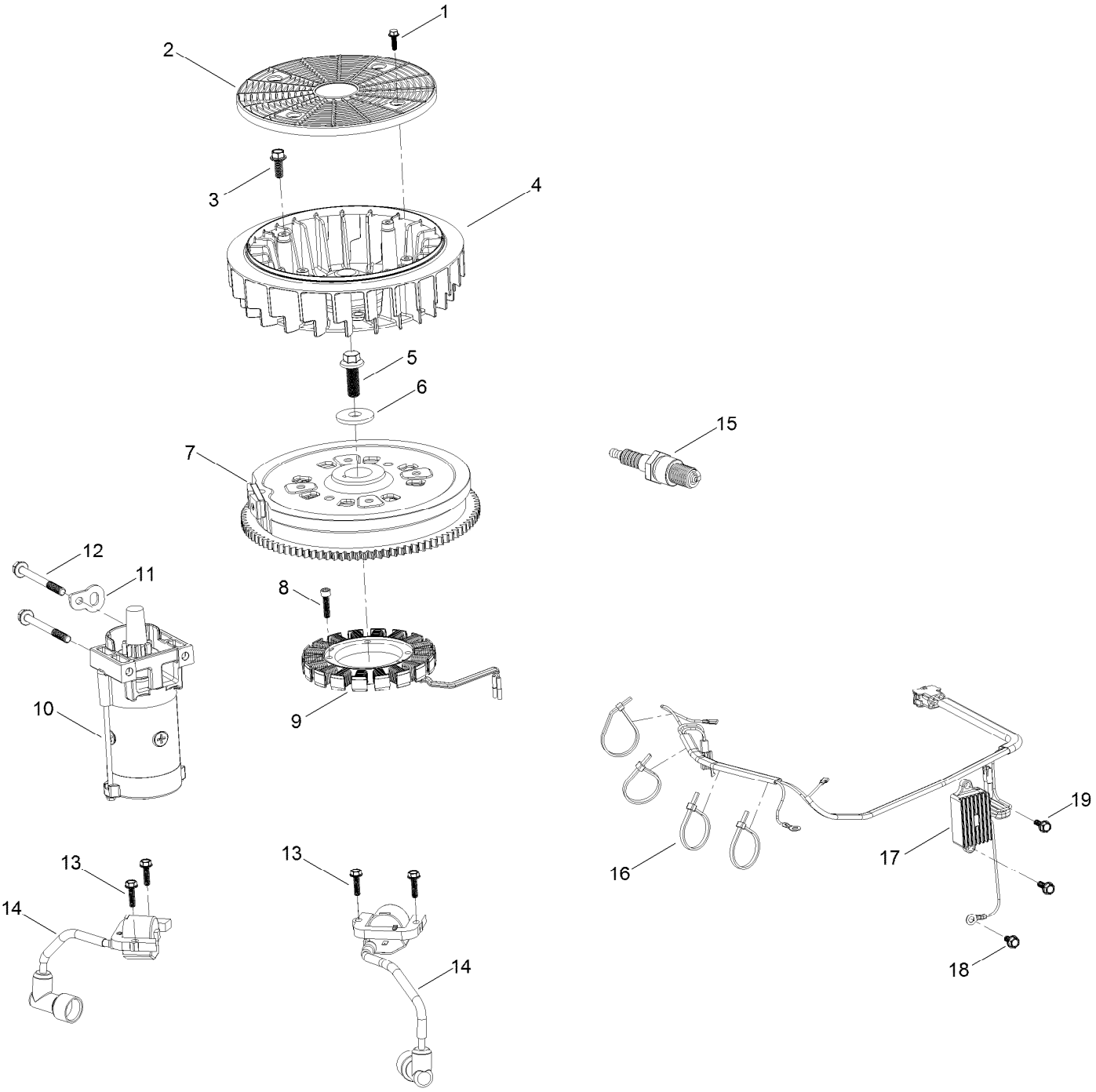

Ignition and Electrical Assemlby (continued)

Ref.	Part Number	Qty.	Description
1	127-9197	4	Screw-HWH
2	127-9198	1	Screen-Rotating
3	127-9199	4	Screw-HWH
4	127-9200	1	Fan-Cooling
5	127-9201	1	Screw-HWH
6	127-9202	1	Washer-Spring
7	127-9306	1	Flywheel
8	127-9210	4	Screw-HSH
9	127-9211	1	Alternator
10	127-9209	1	Motor-Starter
11	127-9208	1	Bracket-Lift
12	120-4231	2	Screw-HHF
13	121-0007	4	Bolt-Flange
14	127-9216	2	Ignition Coil ASM
15	81-3250	2	Spark Plug
16	127-9220	4	Tie-Zip
17	127-9219	1	Regulator-Voltage W/Harness
18	120-4216	1	Screw-HHF
19	120-4232	2	Screw-HHF

Crankcase Assembly

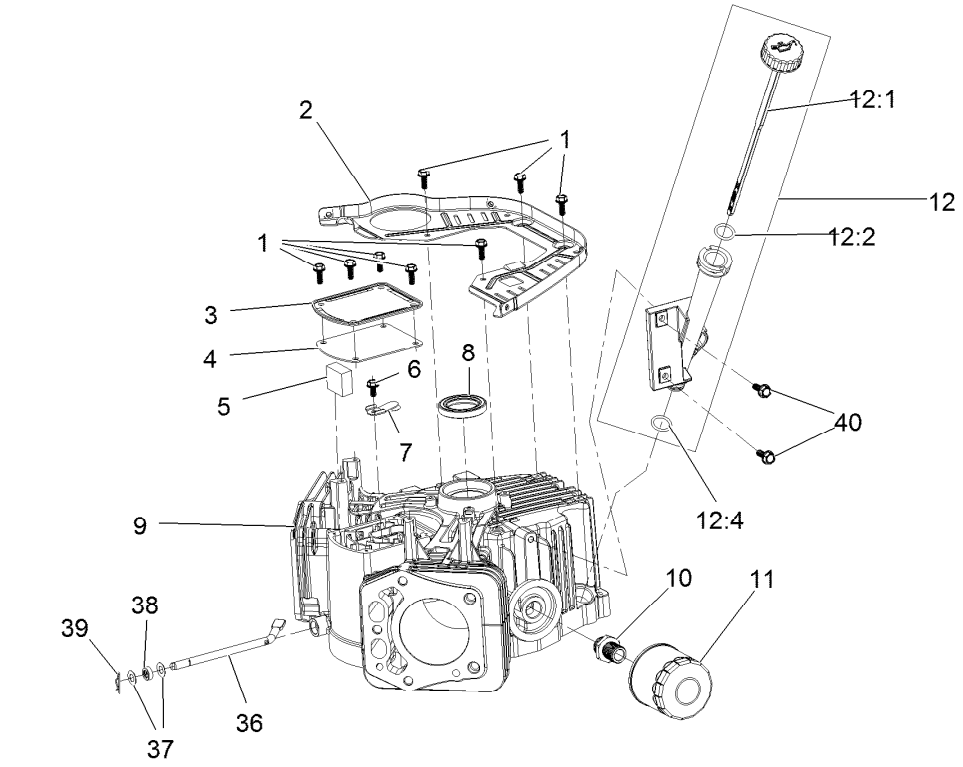

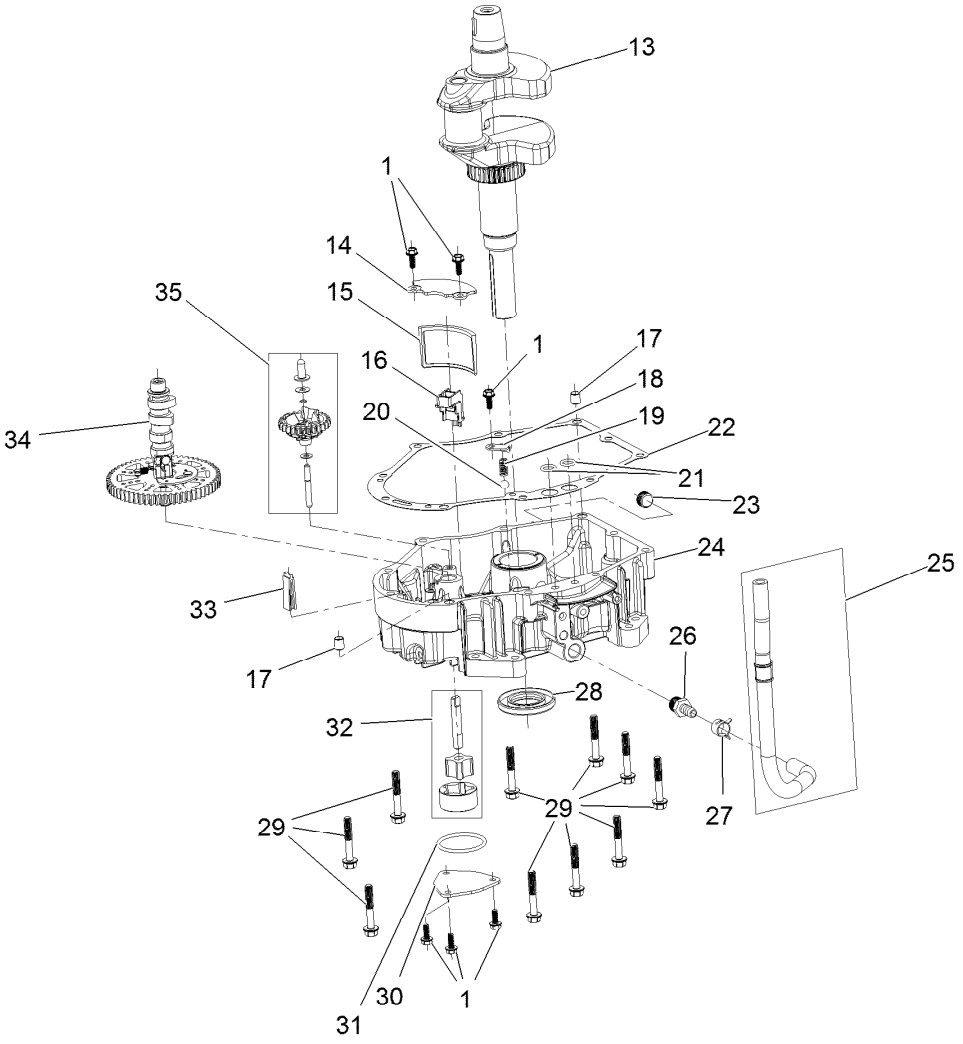

Crankcase Assembly (continued)

Ref.	Part Number	Qty.	Description
1	120-4232	14	Screw-HHF
2	127-9212	1	Baffle
3	127-9213	1	Cover-Breather
4	127-9214	1	Gasket-Breather
5	127-9215	1	Filter-Breather
6	120-4216	1	Screw-HHF
7	127-9217	1	Valve-Breather
8	120-4267	1	Seal-Oil
9	127-9223	1	Crankcase
10	127-9221	1	Fitting-Threaded, Oil Filter
11	120-4276	1	Filter-Oil
12	127-9218	1	Oil Tube ASM
12:1	127-9283	1	Dipstick
12:2	127-9284	1	O-Ring
12:4	127-9286	1	O-Ring
13	127-9255	1	Crankshaft
14	127-9261	1	Cover-Screen, Oil
15	127-9262	1	Screen-Oil
16	127-9263	1	Retainer-Screen
17	120-4274	2	Pin-Dowel
18	127-9264	1	Plate-Retainer
19	127-9265	1	Spring
20	127-9266	1	Valve-Ball
21	120-4262	2	O-Ring
22	127-9267	1	Gasket-Cover, Crankcase
23	120-4285	1	Plug-Drain
24	127-9268	1	Cover-Crankcase
25	127-9293	1	Oil Drain Hose ASM
26	127-9275	1	Fitting-Hose
27	127-9276	1	Clamp-Hose
28	127-9271	1	Seal
29	121-0473	10	Screw-HHF
30	127-9274	1	Cover-Oil Pump
31	127-9273	1	O-Ring
32	127-9272	1	Oil Pump ASM
33	120-4275	1	Deflector-Oil, Rubber
34	127-9269	1	Camshaft
35	127-9270	1	Governor ASM
36	127-9238	1	Shaft-Governor
37	120-4258	2	Washer-Plain
38	120-4257	1	Seal-Oil
39	120-4256	1	Pin-Hair
40	120-4232	2	Screw-HHF

Governor Control Assembly

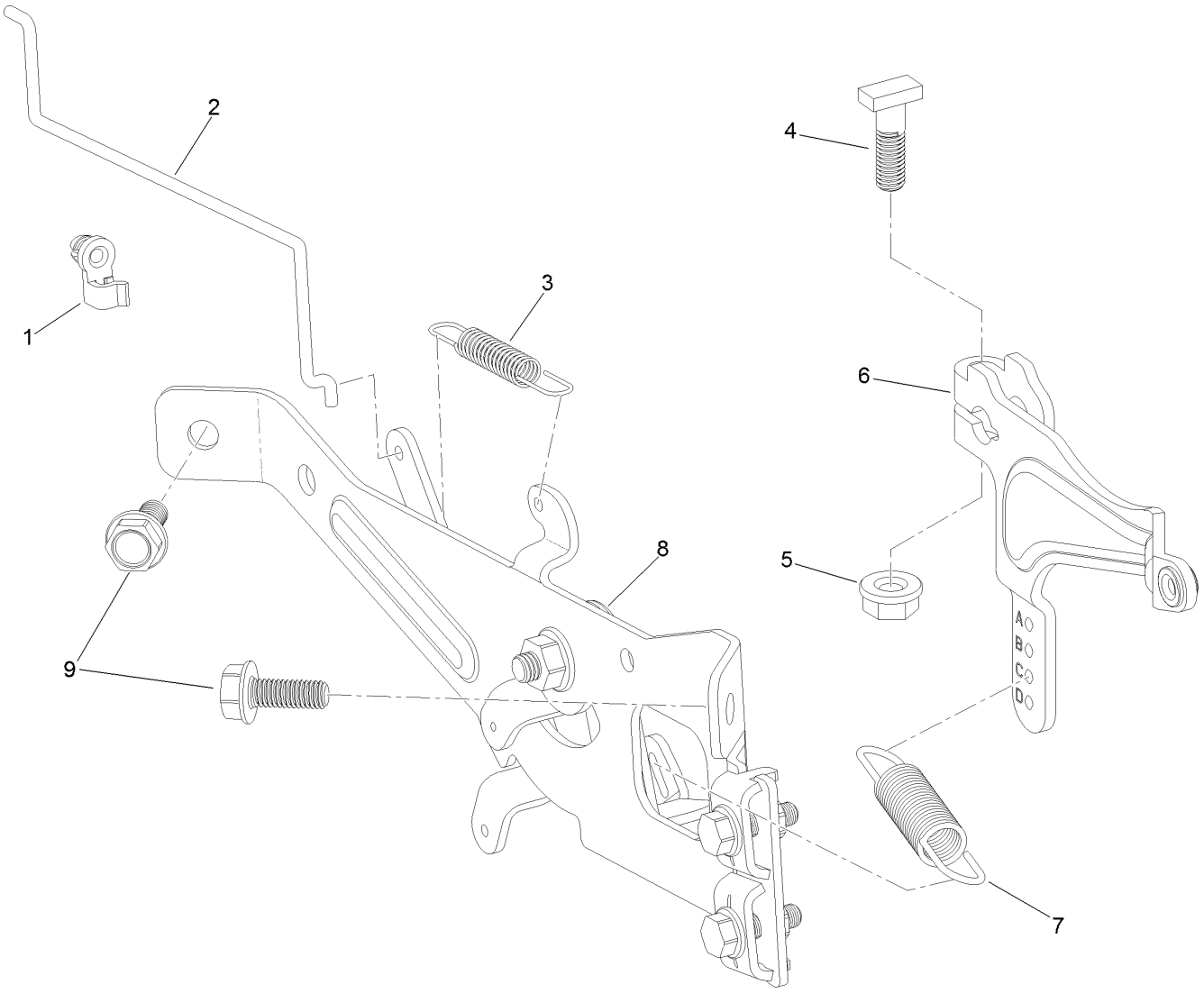

Governor Control Assembly (continued)

Ref.	Part Number	Qty.	Description
1	127-9250	1	Clip-Linkage
2	127-9242	1	Linkage-Choke
3	127-9241	1	Spring-Governor
4	120-4238	1	Bolt-Arm, Governor
5	120-4236	1	Nut-Flange
6	127-9239	1	Arm-Governor
7	127-9240	1	Spring-Governor
8	127-9243	1	Plate-Control
9	120-4232	2	Screw-HHF

Piston and Cylinder Head Assembly

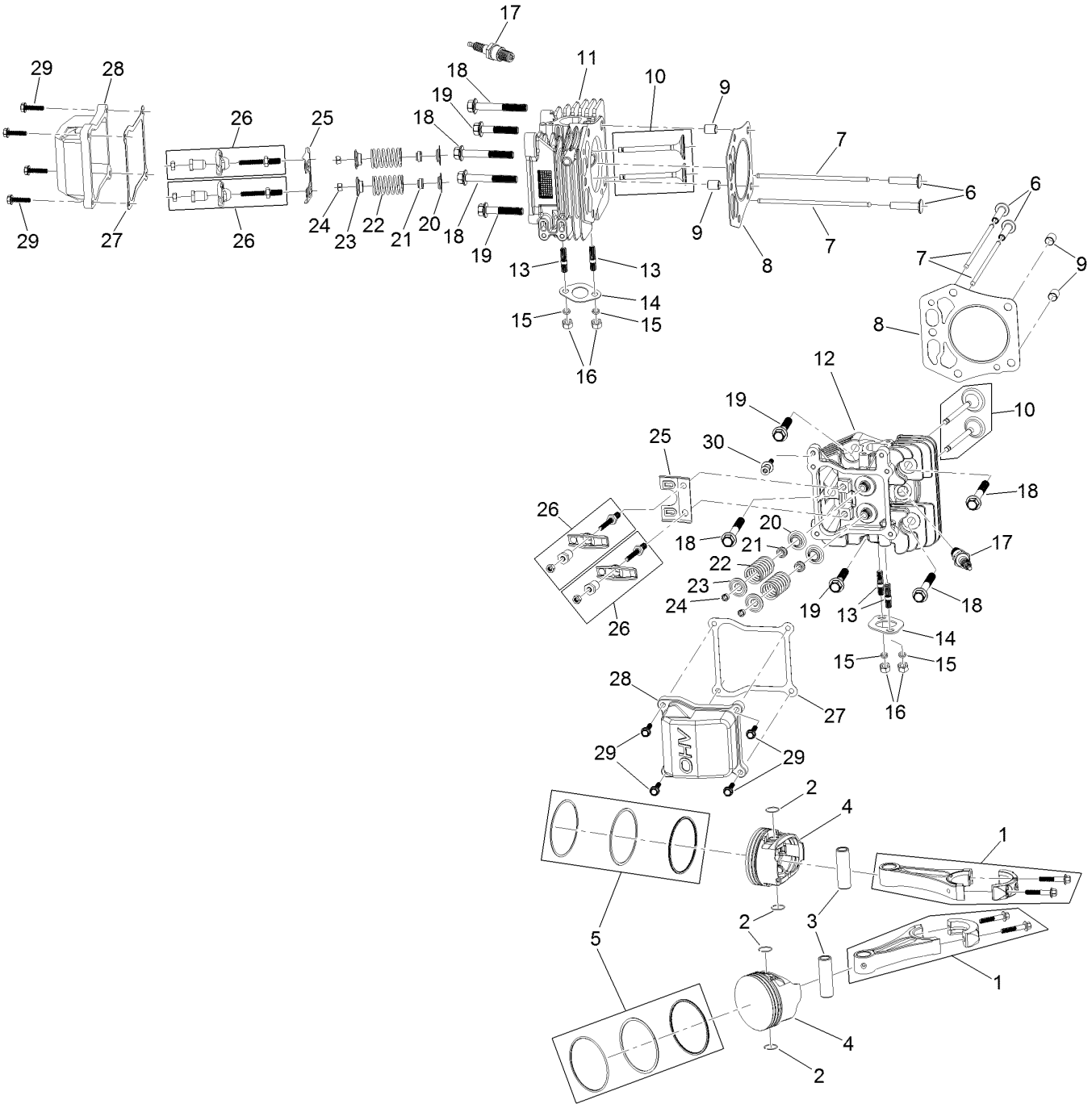

Piston and Cylinder Head Assembly (continued)

Ref.	Part Number	Qty.	Description
1	127-9256	2	Connecting Rod ASM
2	127-9258	4	Clip-Pin, Piston
3	127-9257	2	Pin-Piston
4	127-9259	2	Piston
5	127-9260	2	Piston Ring Set
6	127-9224	4	Lifter-Valve
7	127-9225	4	Rod-Push
8	127-9226	2	Gasket-Head, Cylinder
9	127-9227	4	Pin-Dowel
10	127-9228	2	Valve Set
11	127-9229	1	Head-Cylinder
12	127-9254	1	Head-Cylinder
13	127-9236	4	Stud
14	120-4317	2	Gasket-Exhaust
15	127-9279	4	Washer-Lock, Split
16	121-0199	4	Nut-HH
17	81-3250	2	Spark Plug
18	127-9231	6	Screw-HWH
19	127-9232	4	Screw-HWH
20	120-4303	4	Seat-Spring, Valve
21	120-4304	4	Seal-Stem, Valve
22	120-4305	4	Spring-Valve
23	120-4306	4	Retainer-Spring, Valve
24	120-4307	4	Keeper-Valve
25	127-9233	2	Plate-Guide, Push Rod
26	127-9294	4	Rocker Arm ASM
27	127-9295	2	Gasket-Valve Cover
28	127-9050	2	Cover-Valve
29	120-4225	8	Screw-HHF
30	120-4214	1	Screw-Shoulder, HH

Blower Housing Assembly

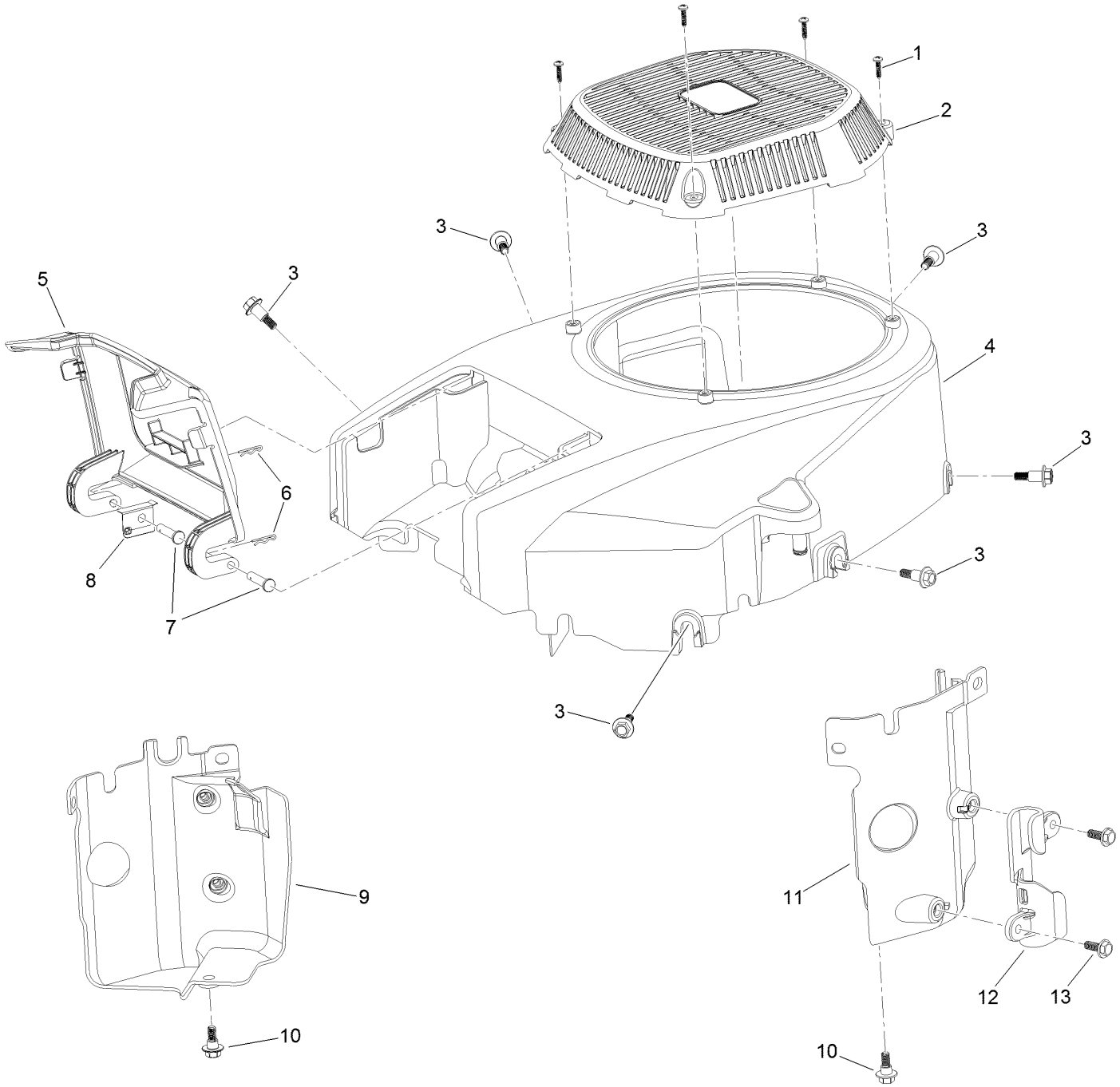

Blower Housing Assembly (continued)

Ref.	Part Number	Qty.	Description
1	127-9195	4	Screw-Plastic, PPH
2	127-9045	1	Cover-Fan
3	127-9196	6	Screw-Shoulder, HWH
4	127-9044	1	Shroud-Engine
5	127-9046	1	Door-Filter, Air
6	127-9280	2	Pin-Hair
7	127-9282	2	Pin
8	127-9281	1	Plate-Spring
9	127-9049	1	Baffle-Air, Left
10	120-4210	2	Screw-Shoulder, HHF
11	127-9048	1	Baffle-Air, Right
12	127-9287	1	Cleat-Hose
13	120-4232	2	Screw-HHF

Gasket and Seal Kit Assembly

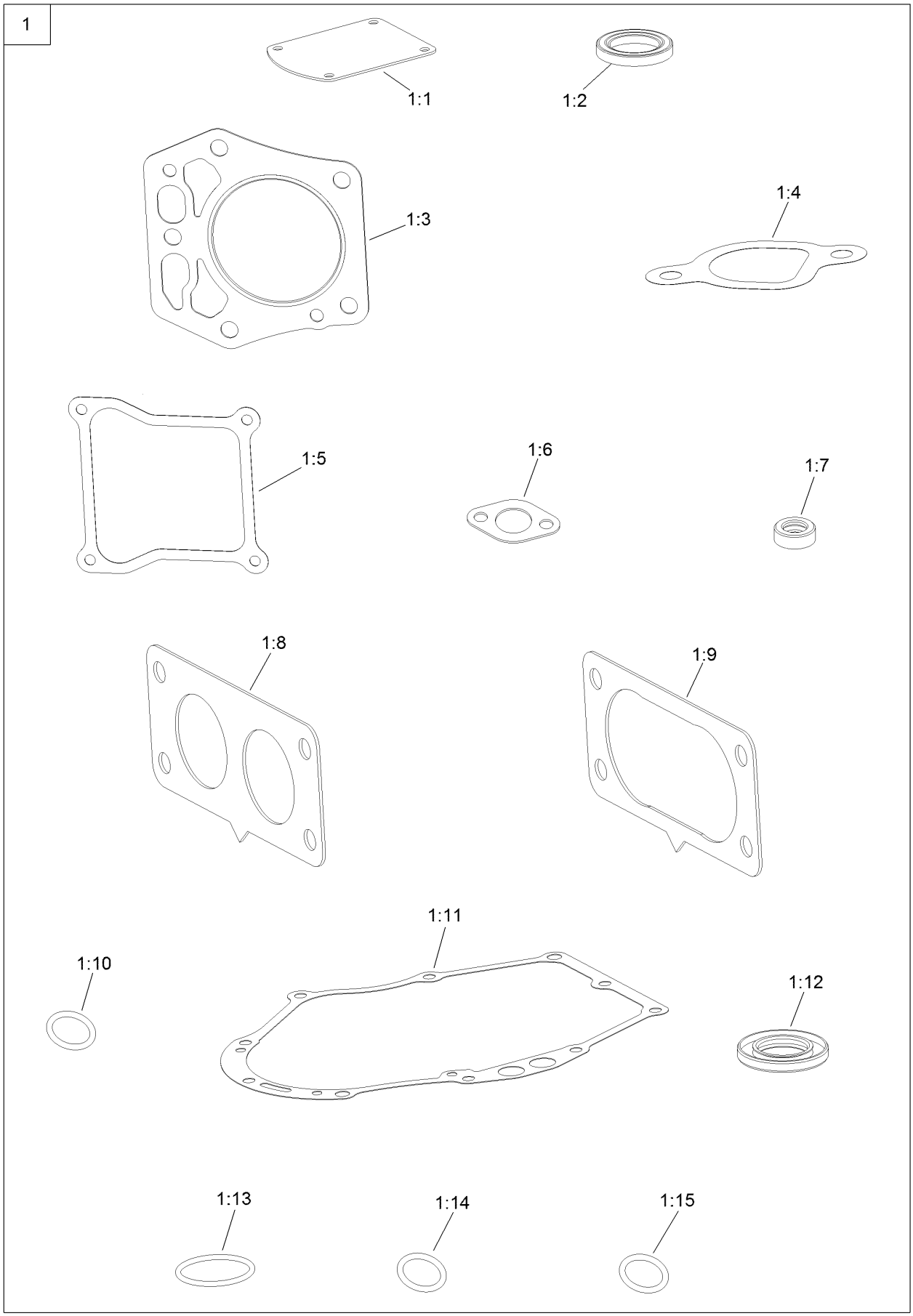

Gasket and Seal Kit Assembly (continued)

Ref.	Part Number	Qty.	Description
1	127-9296	1	Gasket And Seal Kit
1:1	127-9214	1	Gasket-Breather
1:2	120-4267	1	Seal-Oil
1:3	127-9226	2	Gasket-Head, Cylinder
1:4	127-9230	2	Gasket-Intake
1:5	127-9295	2	Gasket-Valve Cover
1:6	120-4317	2	Gasket-Exhaust
1:7	120-4257	1	Seal-Oil
1:8	127-9246	2	Gasket-Carburetor
1:9	127-9251	1	Gasket-Carburetor
1:10	120-4262	2	O-Ring
1:11	127-9267	1	Gasket-Cover, Crankcase
1:12	127-9271	1	Seal
1:13	127-9273	1	O-Ring
1:14	127-9284	1	O-Ring
1:15	127-9286	1	O-Ring

Body Styling and Fuel Tank Assembly

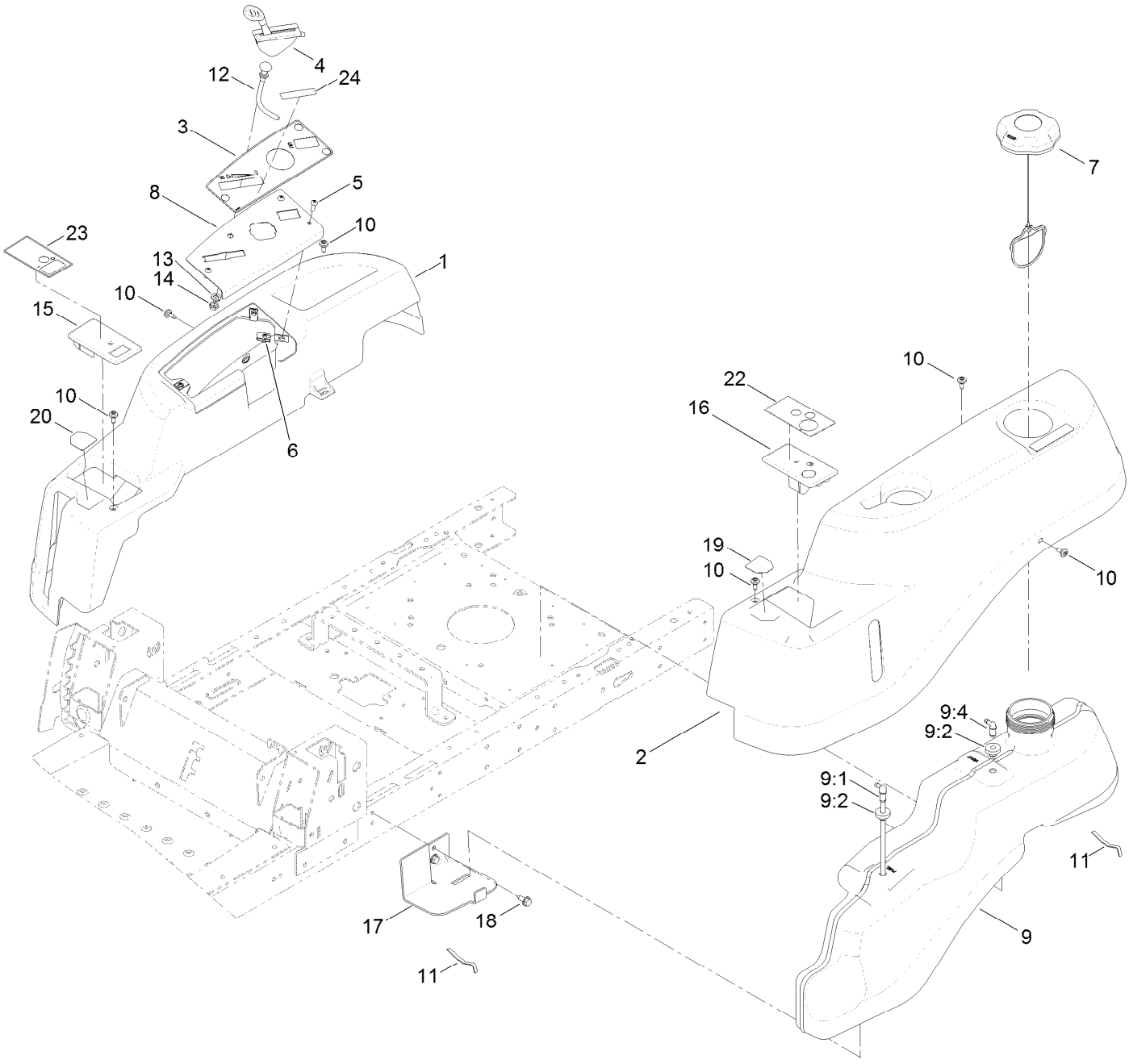

Body Styling and Fuel Tank Assembly (continued)

Ref.	Part Number	Qty.	Description
1	119-3335	1	Pod-RH
2	119-3334	1	Pod-LH
3	121-0772	1	Decal-Panel, Control
4	121-0769	1	Cable-Throttle
5	3258-166	3	Screw-PRH
6	107069	3	Clip
7	120-5461	1	Cap-Fuel, Ratcheting
8	119-3378-03	1	Plate-Control
9	119-3324	1	Fuel Tank ASM
9:1	121-0793	1	Connector-Elbow, 90 DEG
9:2	46-6560	2	Bushing
9:4	117-7400	1	Fitting-Plastic
10	120-7950	8	Screw-Torx
11	609830	2	Spring
12	112-9753	1	Cable-Choke
13	3253-21	1	Washer-Lock
14	3220-3	1	Nut-HJ
15	130-7041	1	Cover-RH
16	130-7042	1	Cover-LH
17	119-3476-03	1	Support-Tank, Front
18	32144-70	2	Screw-HWHTF
19	131-3621	1	Decal-Nmir
20	131-3620	1	Decal-Control, Pedal
22	131-3665	1	Decal-Keychoice
23	131-3955	1	Decal-Brake, Parking
24	132-0904	1	Decal-Shutdown

42 Inch Deck Assembly

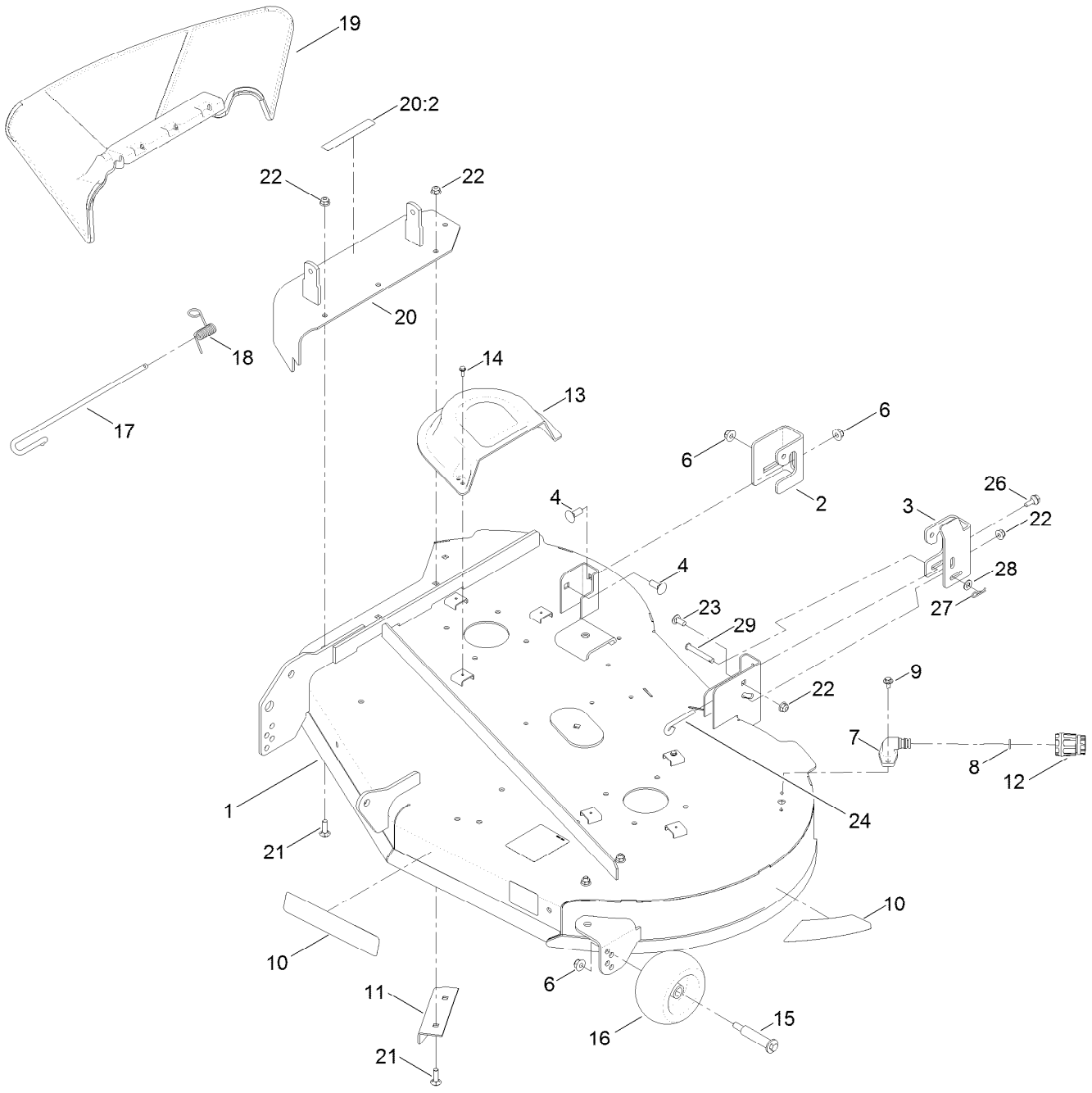

42 Inch Deck Assembly (continued)

Ref.	Part Number	Qty.	Description
1	131-3608	1	42 In Deck And Decal ASM
2	131-4138	1	Bracket-Hanger, RH
3	131-1091	1	Bracket-Hanger, LH
4	3231-2	2	Bolt-CARR
6	104-8301	4	Nut-HF, NI
7	95-2747	1	Fitting-Washout
8	46-6290	1	O-Ring
9	46-8560	2	Screw-HHFTF
10	121-0791	1	Decal-Deck
11	120-7951-03	1	Baffle-Cutoff
12	95-3270	1	Connector-Hose
13	108-7889	2	Cover-Belt
14	32144-1	6	Screw-Taptite
15	112-3977	2	Bolt-Shoulder
16	1-603299	2	Roller-Scalp, Anti
17	109-8854	1	Pin-Chute
18	121-2983	1	Spring-Torsion
19	121-0739	1	Deflector-Discharge
20	131-3961	1	Cover ASM W/Decal
20:2	93-7009	1	Decal-Danger
21	3230-22	4	Screw-CARR
22	104-8300	6	Nut-HF, NI
23	3230-23	1	Screw-CARR
24	131-0955	1	Rod-Level, Deck
26	120-7024	1	Screw-Shoulder, HWH
27	1-806003	1	Pin-Cotter
28	3256-23	1	Washer-Plain
29	110-0618	1	Pin-Clevis

42 Inch Deck, Blade, and Spindle Assembly

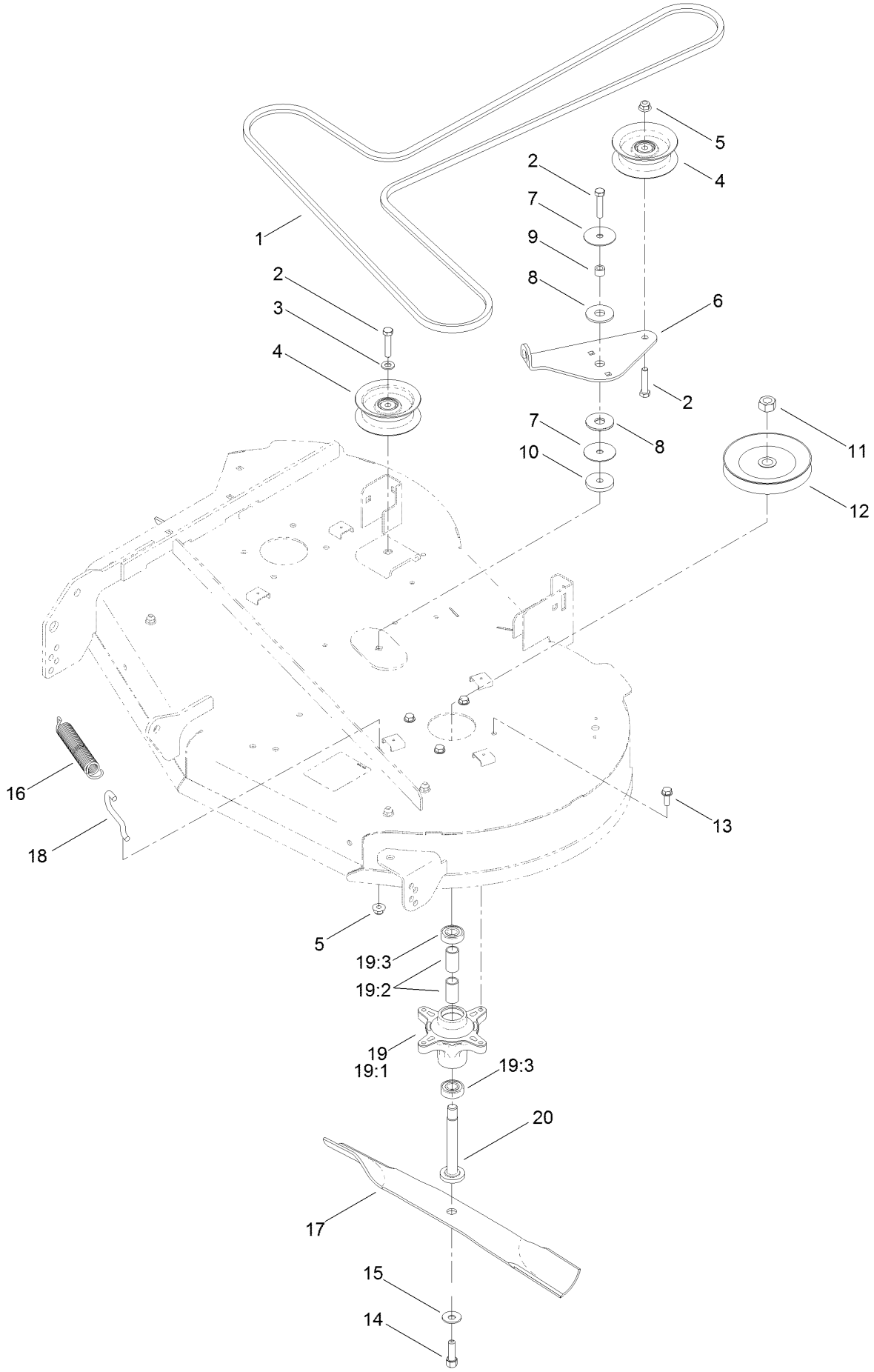

42 Inch Deck, Blade, and Spindle Assembly (continued)

Ref.	Part Number	Qty.	Description
1	119-8819	1	V-Belt
2	323-9	3	Screw-HH
3	3256-24	1	Washer-Flat
4	106-2175	2	Pulley-Idler, Flat
5	104-8301	2	Nut-HF, NI
6	114-8540	1	Arm-Idler
7	120-2229	2	Washer
8	114-0463	2	Washer-Friction, Composite
9	115-4986	1	Spacer
10	110-9981	1	Washer-Plain
11	3219-6	2	Nut-Hex
12	125-5574	2	Pulley
13	32144-41	8	Screw-Taptite
14	26-0671	2	Screw-HH
15	3290-465	2	Washer-Belleville
16	106-2177	1	Spring-Extension
17	131-3939-03	2	Blade-High Lift
18	88-5970	1	Hook-Return, Spring
19	121-0751	2	Spindle ASM
19:1	117-7267	1	Spindle
19:2	120-7935	2	Spacer
19:3	100-1048	2	Bearing-Ball
20	117-7268	2	Shaft-Spindle

42 Inch Deck and Decal Assembly No. 131-3608

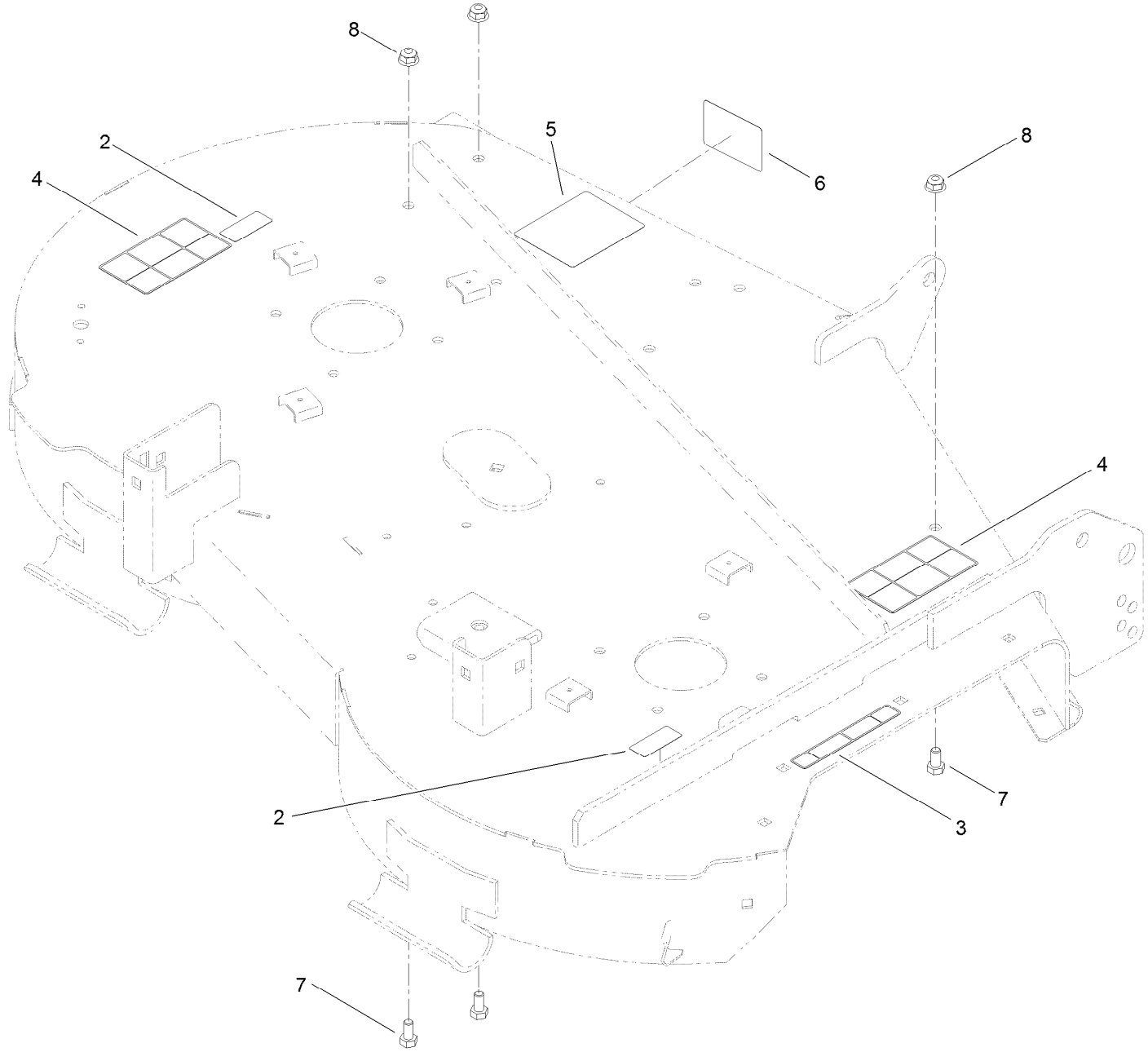

42 Inch Deck and Decal Assembly No. 131-3608 (continued)

Ref.	Part Number	Qty.	Description
2	114-1606	2	Decal-Danger
3	93-7009	1	Decal-Danger
4	110-6691	2	Decal-Danger
5	105-7015	1	Decal-Routing, Belt
6	112-9840	1	Decal-Scalp, Anti
7	322-2	3	Screw-HH
8	104-8300	3	Nut-HF, NI

Attachments and Accessories

For 74787 TimeCutter SWX 4250 Riding Mower

Product Name	Model/Part
All Season Synthetic Oil (10W30, QT)	117-0066
Fuel Stabilizer (4oz)	117-0089
Fuel Stabilizer (16oz)	117-0090
Seat Cover w/Arm Rest	117-0097
Bagging Enhancement Kit	121-5698
Striping Kit	121-5702
Jack Mount Kit	126-5251
Jack Kit	127-6666
Replacement Blade Kit	131-3939-03P
Attachment Mount Kit	131-3966
42in Recycler Kit	131-4183
HD Air Cleaner Kit	136-7860
10w30 4-Cycle Engine Oil (32oz Bottle)	38280
Toro 4-Cycle SAE 30 Oil (32oz Bottle)	38903
Storage Cover	490-7516
Sunshade Kit	79011
Cargo Carrier	79040
42in Bagger	79385

Notes:

Notes:

Notes:



Count on it.