Form No. 3440-871 Rev A

Slope Sensor Kit

LT3340 Triple Reel Mower or LT-F3000 Triple Flail Mower

Model No. 02951

Installation Instructions

Note: This kit is for Stage 5 machines only.

Safety

Safety and Instructional Decals

Safety decals and instructions are easily visible to the operator and are located near any area of potential danger. Replace any decal that is damaged or missing.

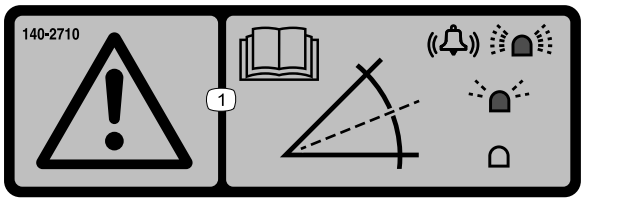

140-2710

1. Warning—read the *Operator's Manual*; a fast flashing light and alarm sounding indicates a steep slope; a slow flashing light indicates a moderate slope; no light indicates normal operating conditions.

© 2021—The Toro® Company
8111 Lyndale Avenue South
Bloomington, MN 55420

Register at www.Toro.com.

CE

Original Instructions (EN)
Printed in the USA
All Rights Reserved

3440-871

Installation

Loose Parts

Use the chart below to verify that all parts have been shipped.

Procedure	Description	Qty.	Use
1	No parts required	–	Prepare the machine.
2	Slope sensor Carriage bolt (1/4 x 2 inches) Lock nut (1/4 inch) Spacer Slope sensor decal	1 2 2 2 1	Install the kit.
3	Fuse (2 A)	1	Install the fuse.
4	No parts required	–	Calibrate the sensor.

1

Preparing the Machine

No Parts Required

Procedure

1. Park the machine on a level surface.
2. Engage the parking brake.
3. Lower the cutting unit(s).
4. Shut off the machine and remove the key.

2

Installing the Kit

Parts needed for this procedure:

1	Slope sensor
2	Carriage bolt (1/4 x 2 inches)
2	Lock nut (1/4 inch)
2	Spacer
1	Slope sensor decal

Procedure

1. Raise the platform. Refer to the traction unit *Operator's Manual*.
2. Remove the plastic bulkhead behind the seat.
3. Install the slope sensor to the machine frame with 2 carriage bolts (1/4 x 2 inches), 2 spacers, and 2 flange nuts (1/4inch) to secure the slope sensor to the machine frame (Figure 1).

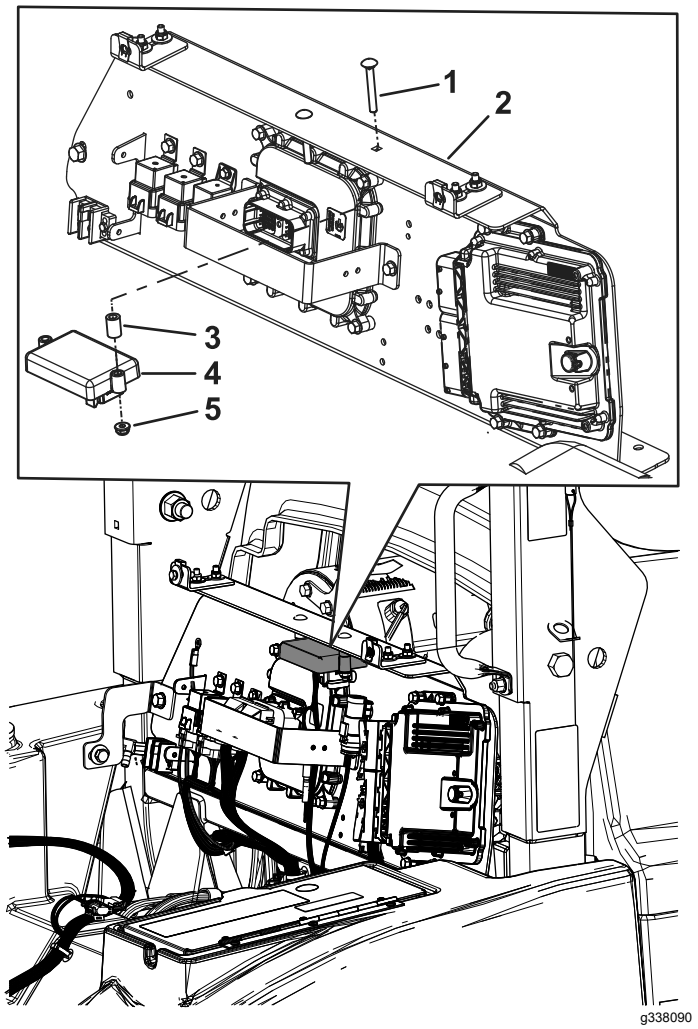

Figure 1

1. Carriage bolt (1/4 x 2 inches)
2. Machine frame
3. Spacer
4. Slope snsor
5. Lock nut (1/4 inch)

4. Locate the slope sensor connector in the main wire harness and plug it into the slope sensor.
5. Use cable ties to secure the wire harness away from moving parts or pinch points.
6. Install the slope-sensor decal adjacent to the machine-stability decal on the storage-pod lid (Figure 2).

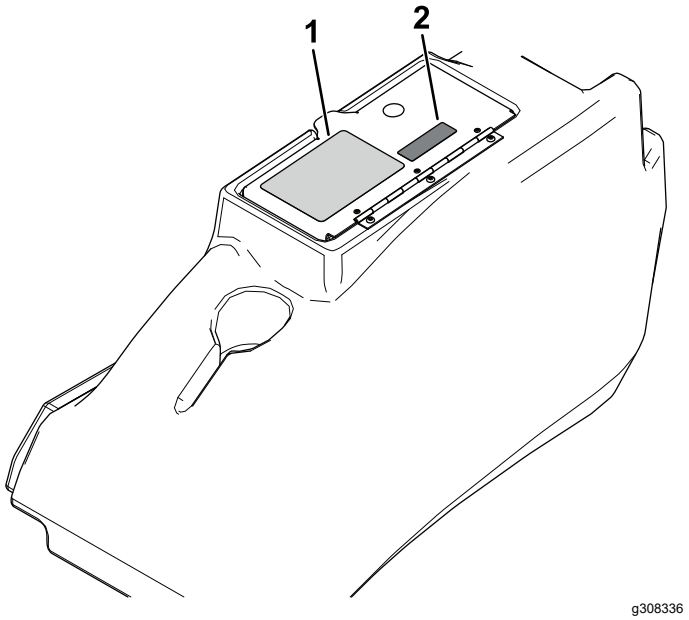

Figure 2

1. Machine-stability decal
2. Slope-sensor decal

3

Installing the Fuse

Parts needed for this procedure:

1	Fuse (2 A)

Procedure

1. Open the lid on the left pod.
2. Remove the 3 knobs inside the storage pod (Figure 3).

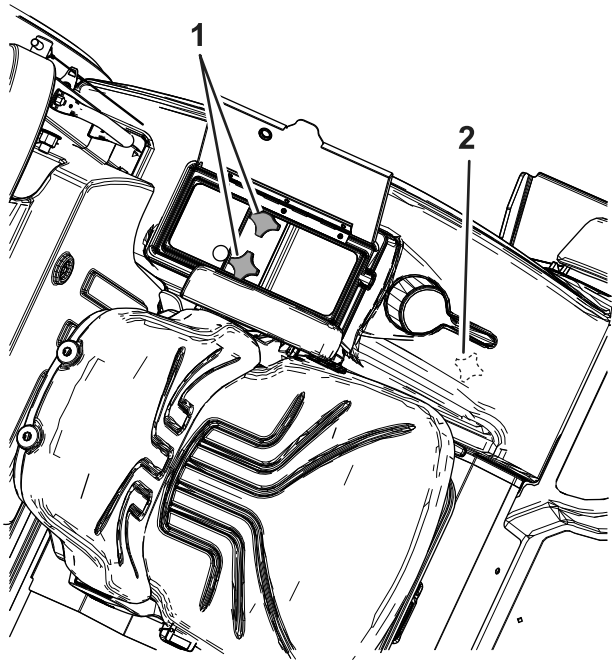

g338478

Figure 3

1. Knobs
2. Front knob

3. Remove the storage pod and locate the fuse block.
4. Remove the fuse-block cover and install the fuse in the location shown in Figure 4.

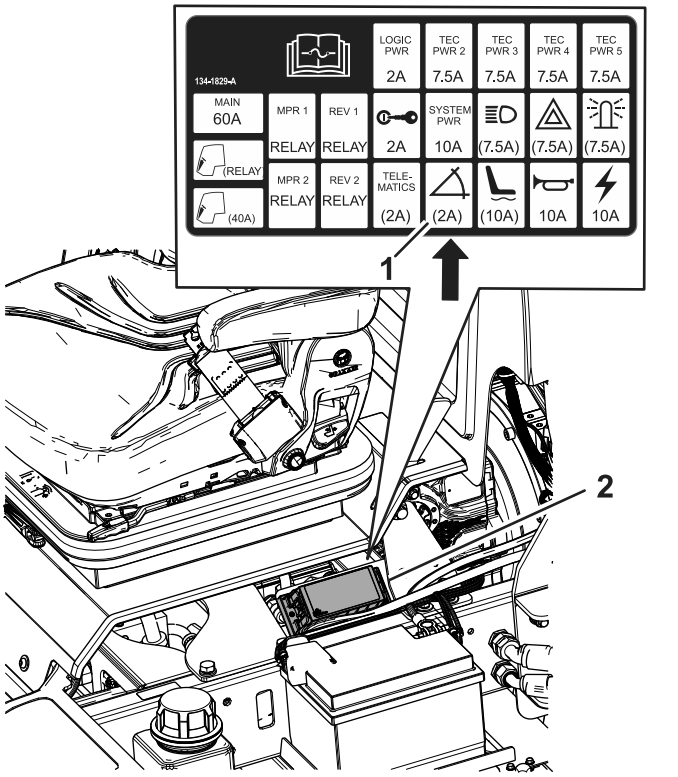

g338477

Figure 4

1. Install the fuse in this location
2. Fuse block

5. Install the fuse-block cover and install the storage pod with the 3 knobs.

4

Calibrating the Sensor

No Parts Required

Procedure

Note: When you first turn the ignition key to on, the InfoCenter shows advisory B2710, Calibrate Slope Sensor.

1. While on a flat surface, remove the plug from the calibration connectors (Figure 5).
2. Plug the calibration connectors together as shown in Figure 5.

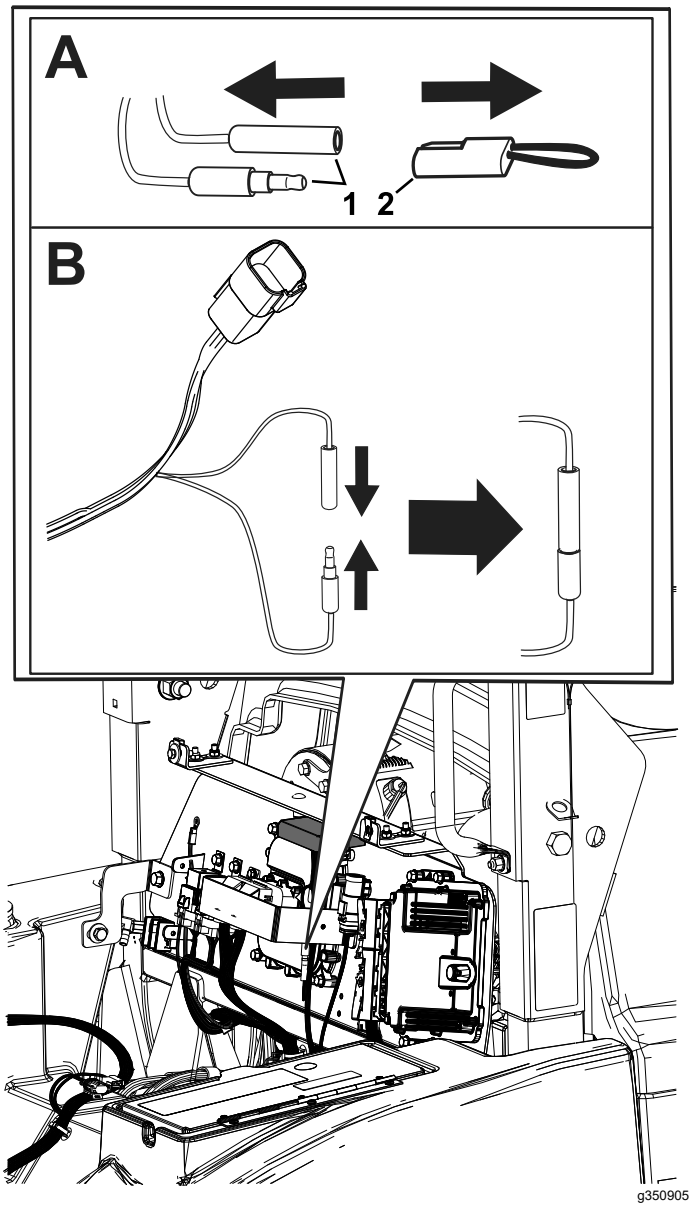

Figure 5

1. Calibration connectors 2. Plug

3. Turn the ignition key to the ON position, but do not start the engine.
4. The InfoCenter shows Message 600, Slope Sensor Calibrating.

   Note: The LED light at the top of the display screen blinks as the sensor calibrates.

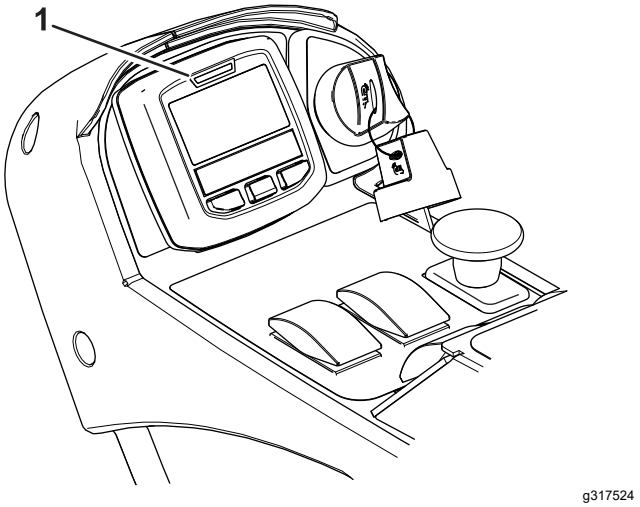

Figure 6

1. LED light

5. When the InfoCenter shows Message 601, Slope Sensor Calibrated, Cycle keyswitch, and the light no longer blinks, turn the ignition key to the OFF position.
6. Disconnect the calibration connectors and install the plug onto the connectors.

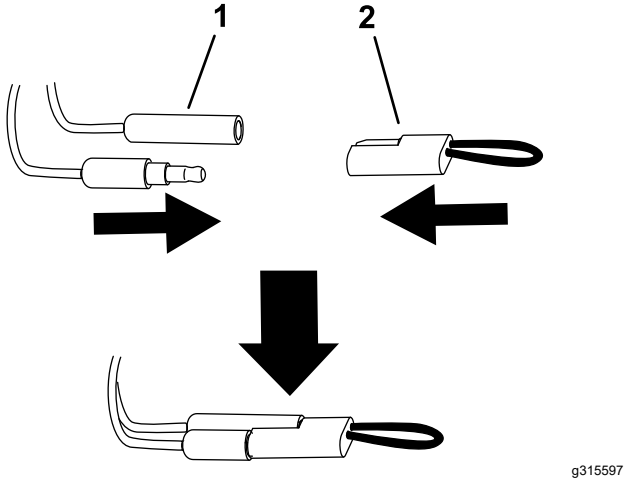

Figure 7

1. Calibration connectors 2. Plug

7. Install the plastic cover.
8. Lower the seat platform and ensure it is latched.

Operation

Using the Slope Sensor

The light and alarm indicates the severity of the slope:

- Red light—normal operating conditions
- Slow, flashing red light and Advisory B2713 displaying on the screen—moderate slope

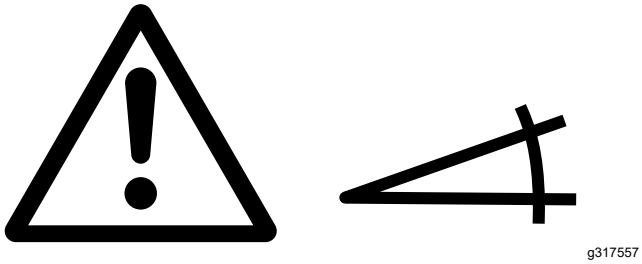

g317557

Figure 8
Advisory B2713

- Fast, flashing red light, audible alarm, and Advisory B2714 displaying on the screen—steep slope; proceed to a more shallow slope.

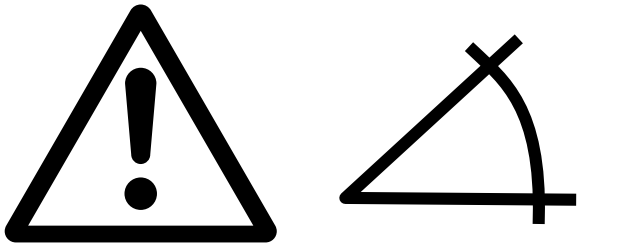

g317558

Figure 9
Advisory B2714

⚠ WARNING

Slopes are a major factor related to loss-of-control and tip-over accidents, which can result in severe injury or death.

Use extreme caution when operating the machine on a slope.

Notes:



Count on it.