Form No. 3441-114 Rev A

TORO®

Count on it.

Parts Catalog

# Workman® MDX

## Utility Vehicle

**Model No. 07235TC—Serial No. 407300000 and Up**

Register at www.Toro.com.
Original Instructions (EN)

*3441-114* A

# Ordering Replacement Parts

To order replacement parts, please supply the part number, the quantity, and the description of each part desired.

### Understanding Reference Numbers

Each identified part in an illustration has a reference number. The reference number for a part also appears in the parts list, along with other information about the part.

This catalog uses two special reference number formats, one to indicate parts in a service assembly and another to indicate the quantity of a given part in an illustration.

### Service Assembly Reference Numbers

Parts in service assemblies have reference numbers in the form a:b. The a represents the reference number of the entire service assembly and the b represents a sequential number unique to each part within the service assembly.

For example, a wheel assembly might be identified by reference number 6, the tire by 6:1, the valve by 6:2, and the wheel by 6:3. When you order the assembly identified by reference number 6, you receive all parts identified by reference numbers 6:1,6:2, and 6:3. However, you may also order any part individually. Reference numbers of this type appear in illustration and in parts lists.

### Reference Numbers Indicating Quantity

In an illustration, if a reference number indicates more than one part, the reference number has the form nX y. The n represents the quantity of the part, the X is the multiplication symbol, and the y represents the reference number.

For example, in an illustration, the reference number 2X 37 means that two of the parts identified by reference number 37 are indicated.

# Contents

Front Frame and Suspension Assembly . . . 4
Rear Frame and Suspension Assembly . . . 6
Front Brake Assembly . . . 7
Master Cylinder Assembly No. 104-6782 . . . 8
Brake Caliper Assembly No. 127-7424 . . . 9
Rear Brake Assembly . . . 10
RH Rear Brake Assembly No. 114-8331 . . . 11
LH Rear Brake Assembly No. 114-8332 . . . 12
Steering Assembly . . . 13
Pedal Assembly . . . 14
Shifter Assembly . . . 15
Hood and Fender Assembly . . . 16
Dash Assembly . . . 17
Control Panel Assembly . . . 18
Seatbase Assembly . . . 19
Cargo Bed Assembly . . . 20
Cargo Bed and Tailgate Service Assembly No. 133-0560 . . . 21
Engine, Clutch and Air Cleaner Assembly . . . 22
Primary Clutch Assembly No. 138-0094 . . . 24
Air Cleaner Assembly No. 99-7120 . . . 25
Rear Axle Drive System Assembly . . . 26
Secondary Clutch Assembly No. 136-6289 . . . 27
Transaxle Assembly No. 119-0760 . . . 28
Battery Assembly . . . 30
Electrical Assembly . . . 31
Starter Generator Assembly No. 131-8444 . . . 32
Fuel Tank Assembly . . . 33
Attachments and Accessories . . . 34

**© 2020—The Toro® Company**
**8111 Lyndale Avenue South**
**Bloomington, MN 55420**



**Contact us at www.Toro.com.**
**Printed in the USA.**
**All Rights Reserved**

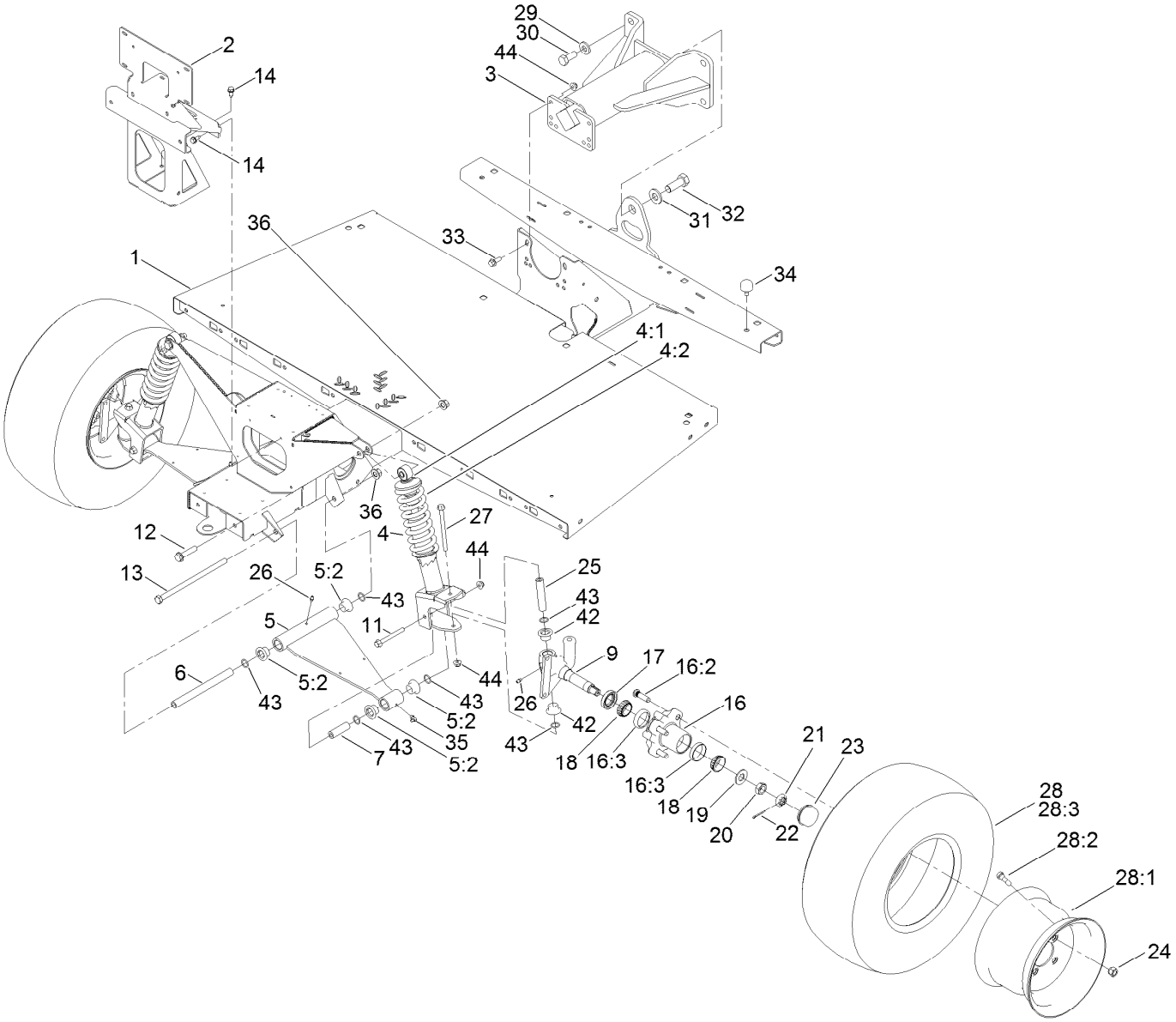


# Front Frame and Suspension Assembly

| Ref. | Part Number | Qty. | Description |
|---|---|---|---|
| 1 | 132-6735-03 | 1 | Frame-Front |
| 2 | 132-6736-03 | 1 | Support-Bumper |
| 3 | 99-7700 | 1 | Yoke-Pivot |
| 4 | 132-6791 | 2 | Strut ASM |
| 4:1 | 133-0556 | 1 | Spring-Coil |
| 4:2 | 131-8574 | 1 | Isolator-Shock |
| 5 | 138-3583 | 2 | Control Arm ASM |
| 5:2 | 133-0643 | 4 | Bushing-Flange, O-Ring |
| 6 | 133-0595 | 2 | Sleeve-Control Arm, Inner |
| 7 | 131-8583 | 2 | Sleeve-Control Arm, Outer |
| 9 | 127-8825-03 | 1 | Spindle-LH |
| 10 | 127-8826-03 | 1 | Spindle-RH ● |
| 11 | 139-3370 | 2 | Screw-HF |
| 12 | 3234-46 | 2 | Screw-HHF |
| 13 | 325-39 | 2 | Screw-HH |
| 14 | 32144-70 | 6 | Screw-HWHTF |
| 16 | 127-8851 | 2 | Front Hub ASM |
| 16:2 | 10-6830 | 4 | Stud-Type, Drive |

| Ref. | Part Number | Qty. | Description |
|---|---|---|---|
| 16:3 | 254-72 | 2 | Bearing-Cup, Tapered |
| 17 | 112-1690 | 2 | Seal-Oil |
| 18 | 254-94 | 4 | Bearing-Cone, Tapered |
| 19 | 93-0309 | 2 | Washer-Tab |
| 20 | 3220-7 | 2 | Nut-Jam |
| 21 | 93-0307 | 2 | Nut-Lock, Retainer |
| 22 | 3272-12 | 2 | Pin-Cotter |
| 23 | 241-119 | 2 | Cap-Dust |
| 24 | 242-50 | 8 | Nut-Lug |
| 25 | 131-8582 | 2 | Sleeve-Kingpin |
| 26 | 302-5 | 4 | Fitting-Grease |
| 27 | 139-3350 | 2 | Screw-HF |
| 28 | 133-0579 | 2 | Wheel And Tire ASM |
| 28:1 | 133-0590 | 1 | Wheel |
| 28:2 | 127-7435 | 1 | Tire (22 X 9.50-10) 4-Ply |
| 28:3 | 232-27 | 1 | Stem-Valve |
| 29 | 99-7667 | 4 | Washer-Flat |
| 30 | 327-4 | 4 | Screw-HH |

● Not illustrated

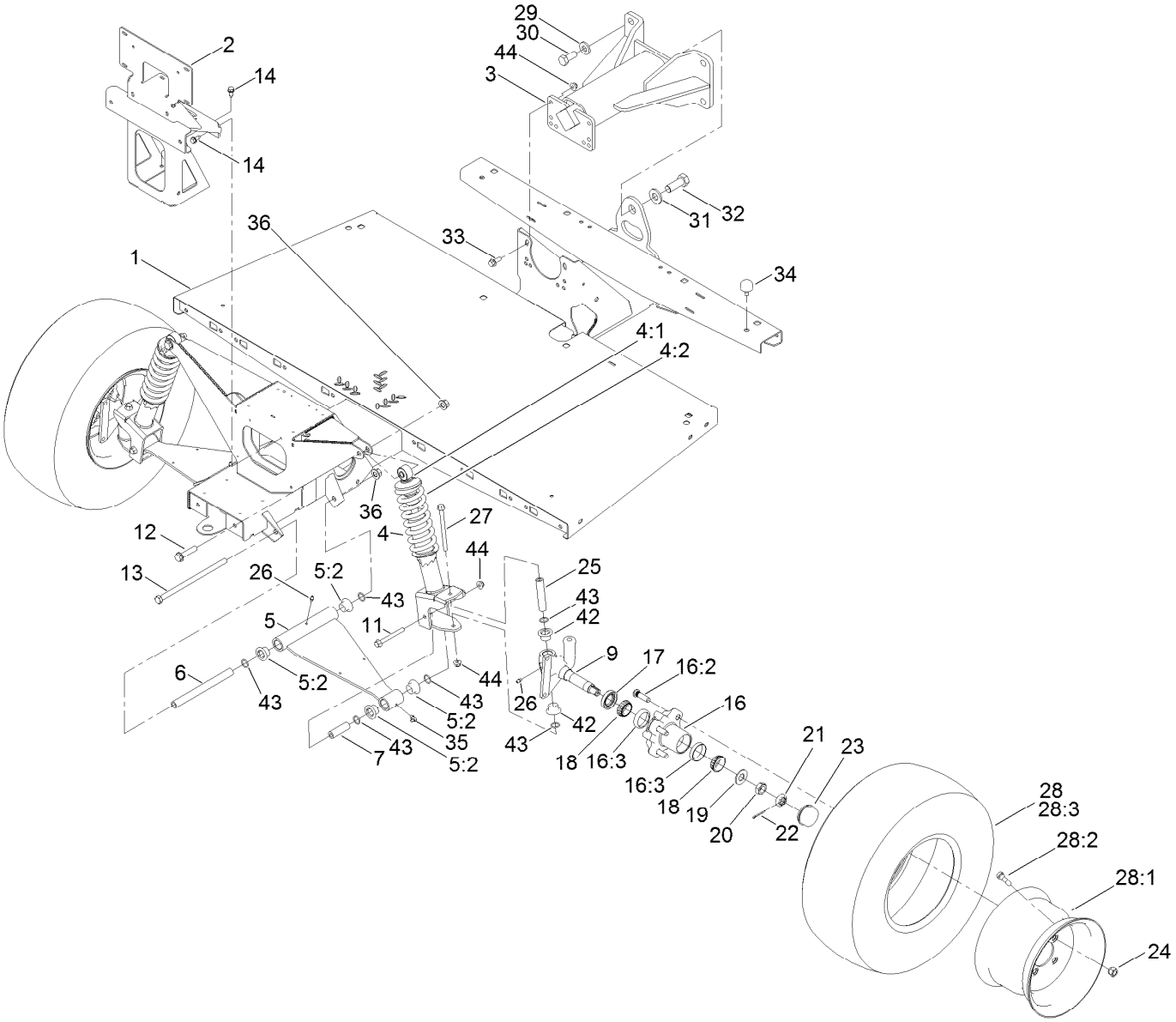


# Front Frame and Suspension Assembly (continued)

| Ref. | Part Number | Qty. | Description |
|---|---|---|---|
| 31 | 87-3060 | 1 | Washer-Hardened |
| 32 | 328-24 | 1 | Screw-HH |
| 33 | 131-2220 | 4 | Screw-HHF |
| 34 | 87-2440 | 1 | Bumper-Rubber |
| 35 | 302-60 | 2 | Fitting-Grease |

| Ref. | Part Number | Qty. | Description |
|---|---|---|---|
| 36 | 99-5107 | 4 | Nut-Lock |
| 42 | 133-0643 | 4 | Bushing-Flange, O-Ring |
| 43 | 237-54 | 12 | O-Ring |
| 44 | 139-3380 | 8 | Nut-HF |

● Not illustrated

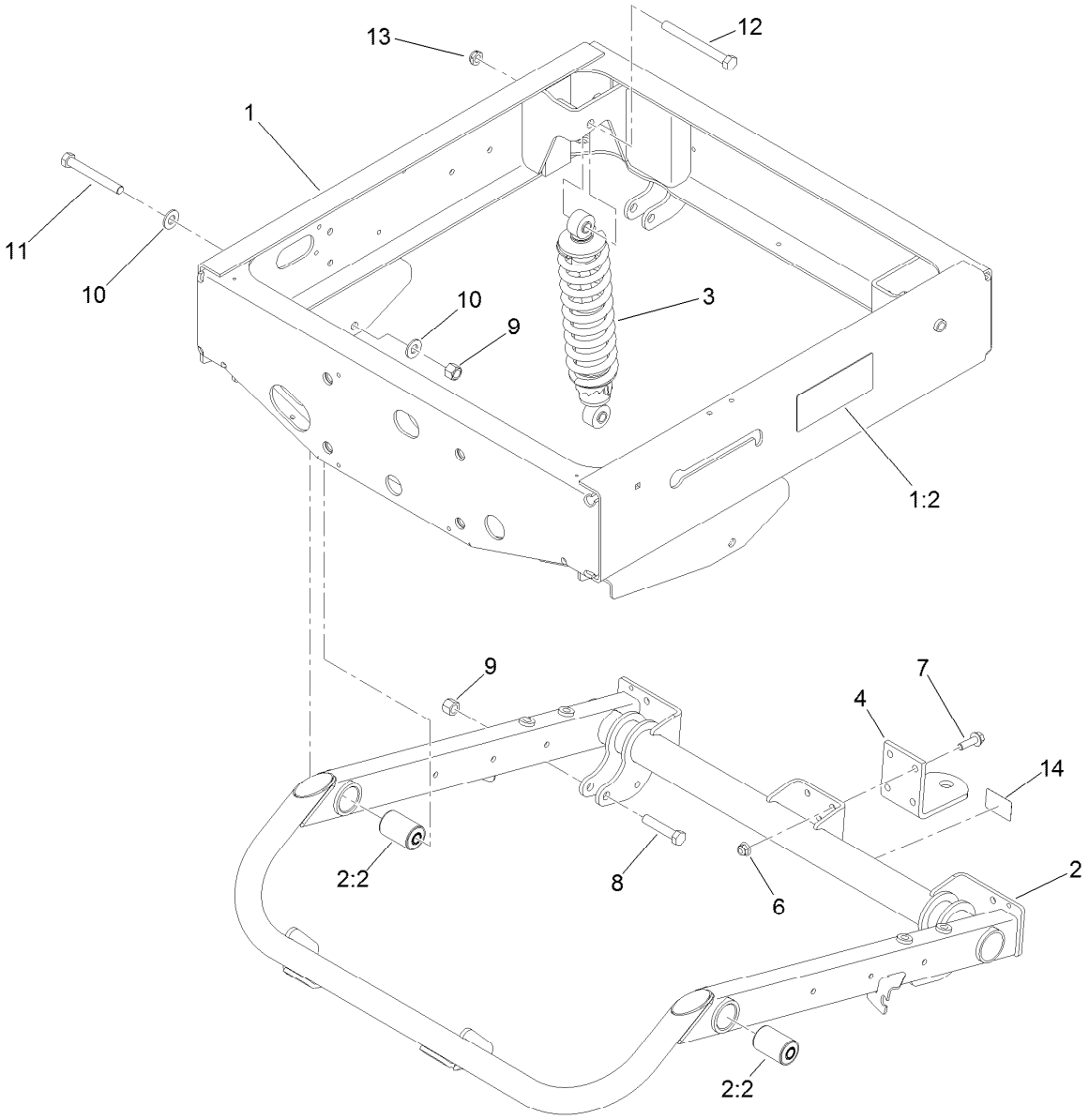


# Rear Frame and Suspension Assembly

| *Ref.* | *Part Number* | *Qty.* | *Description* |
|---|---|---|---|
| 1 | 133-0610 | 1 | Frame-Rear |
| 1:2 | 99-7345 | 2 | Decal-Warning |
| 2 | 140-2596 | 1 | Swing Arm ASM |
| 2:2 | 112-3377 | 2 | Bushing-Arm, Control |
| 3 | 133-0553 | 2 | Shock And Spring ASM |
| 4 | 99-7654-03 | 1 | Hitch-Duty, Light |
| 6 | 104-8301 | 4 | Nut-HF, NI |
| 7 | 3234-24 | 4 | Screw-HHF |
| 8 | 325-10 | 2 | Screw-HH |
| 9 | 3296-23 | 4 | Nut-Lock, NI |
| 10 | 87-7270 | 4 | Washer-Thrust |
| 11 | 325-17 | 2 | Screw-HH |
| 12 | 325-19 | 2 | Screw-HH |
| 13 | 3296-45 | 2 | Nut-Hex |
| 14 | 136-1164 | 1 | Decal-Load, Towing |

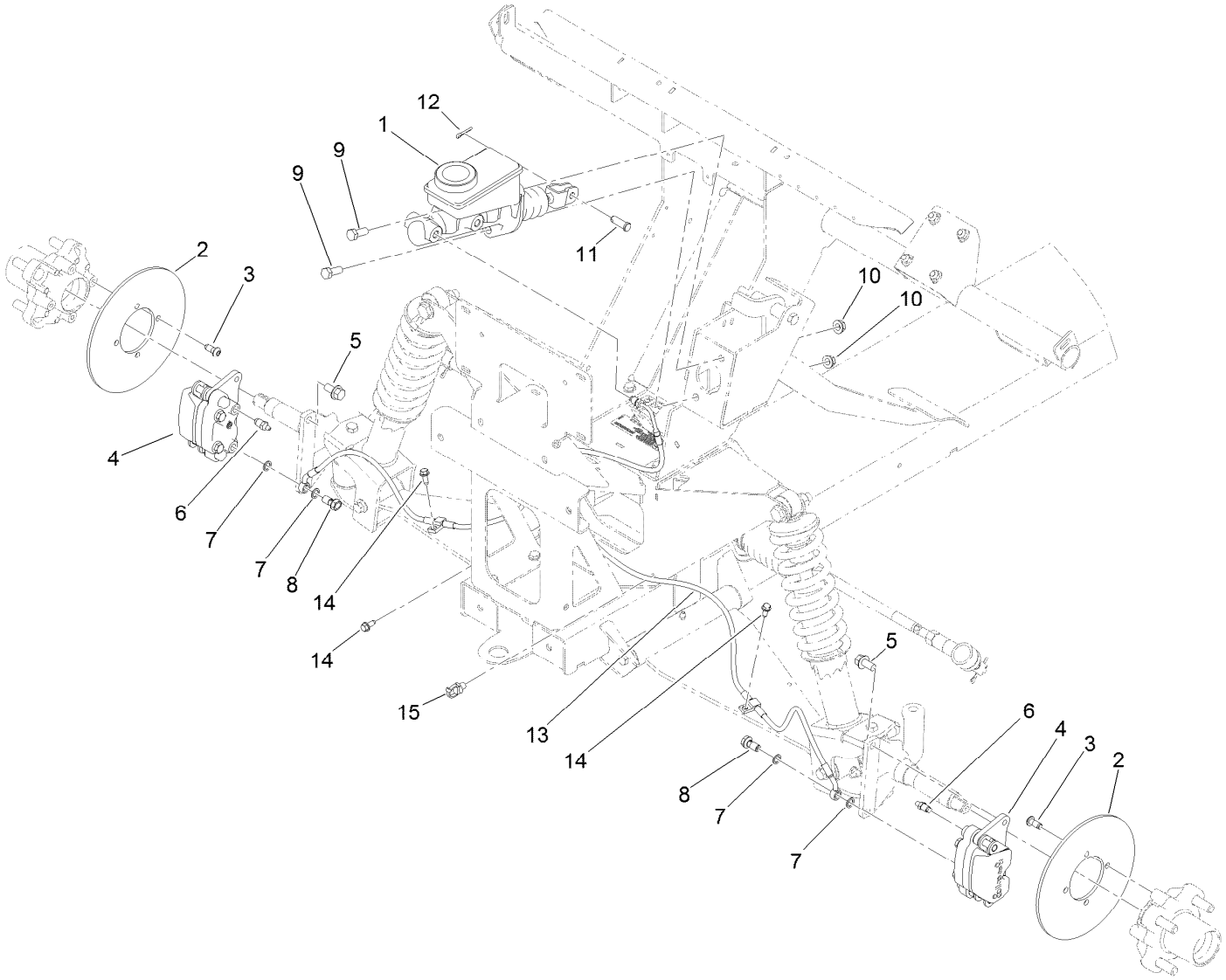


# Front Brake Assembly

| Ref. | Part Number | Qty. | Description |
|---|---|---|---|
| 1 | 104-6782 | 1 | Master Cylinder ASM |
| 2 | 136-6295 | 2 | Rotor-Brake |
| 3 | 121-9671 | 8 | Screw-HSBH |
| 4 | 127-7424 | 2 | Brake Caliper ASM |
| 5 | 3234-1 | 4 | Screw-HHF |
| 6 | 119-9509 | 2 | Screw-Bleed |
| 7 | 115-2341 | 4 | Washer-Banjo |
| 8 | 120-4875 | 2 | Bolt-Flange, Banjo |
| 9 | 323-6 | 2 | Screw-HH |
| 10 | 3290-357 | 2 | Nut-HHF, Whiz |
| 11 | 283-2 | 1 | Pin-Clevis |
| 12 | 3272-10 | 1 | Pin-Cotter |
| 13 | 132-6793 | 1 | Line-Brake, Front |
| 14 | 32144-10 | 3 | Screw-HWH |
| 15 | 32180-030 | 1 | Clip-Tie |

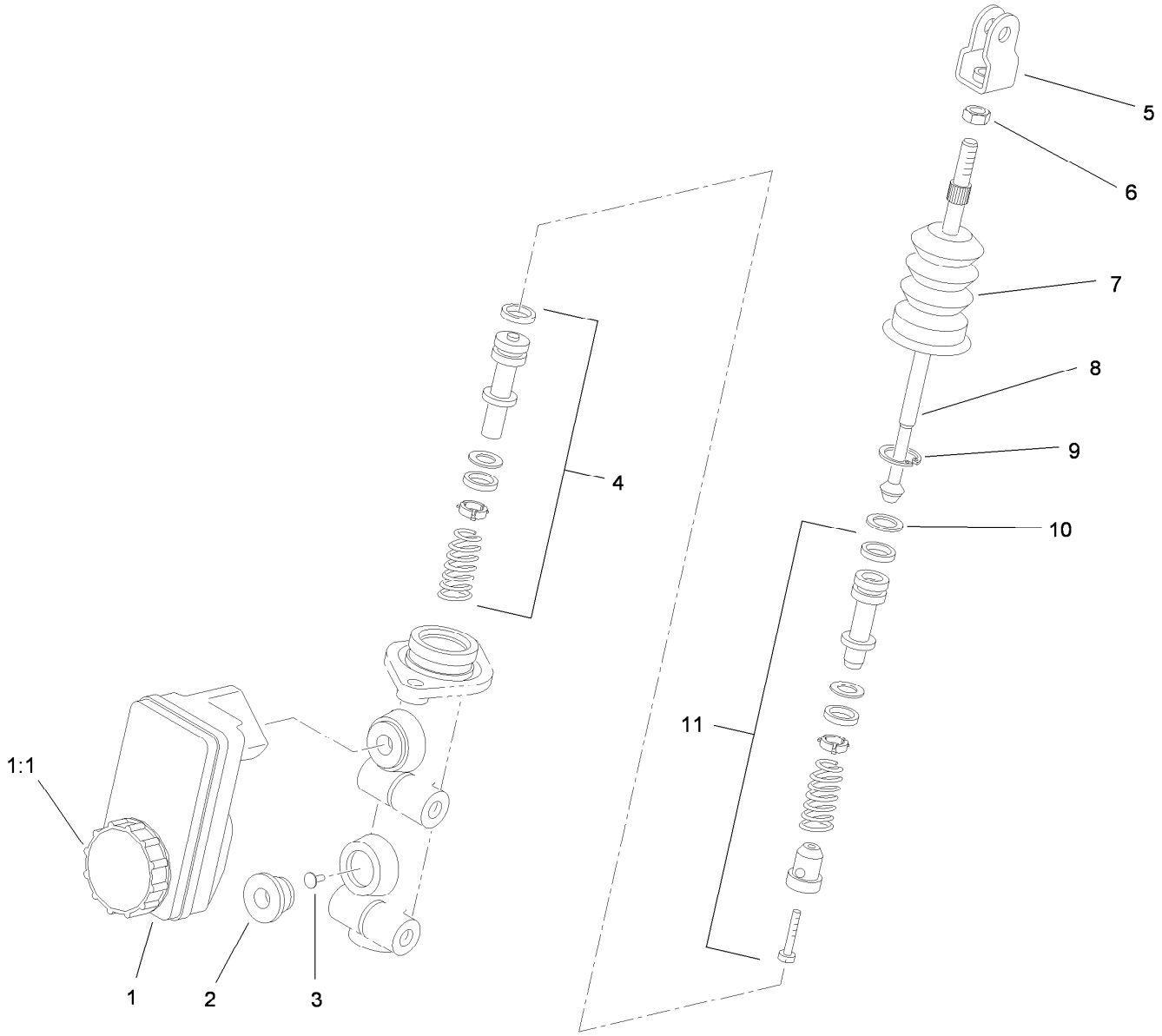


# Master Cylinder Assembly No. 104-6782

| *Ref.* | *Part Number* | *Qty.* | *Description* |
|---|---|---|---|
| 1 | 104-6845 | 1 | Reservoir ASM |
| 1:1 | 92-4112 | 1 | Cap ASM |
| 2 | 93-8971 | 2 | Seal-Port, Flange |
| 3 | 92-4103 | 1 | Pin-Stop |
| 4 | 92-4102 | 1 | Secondary Piston ASM |
| 5 | 92-4110 | 1 | Clevis |
| 6 | 21-0360 | 1 | Nut-Hex |
| 7 | 94-5209 | 1 | Cover-Dust |
| 8 | 94-5210 | 1 | Rod-Push |
| 9 | 92-4109 | 1 | Ring-Snap |
| 10 | 92-4108 | 1 | Retainer-Washer |
| 11 | 92-4101 | 1 | Primary Piston ASM |

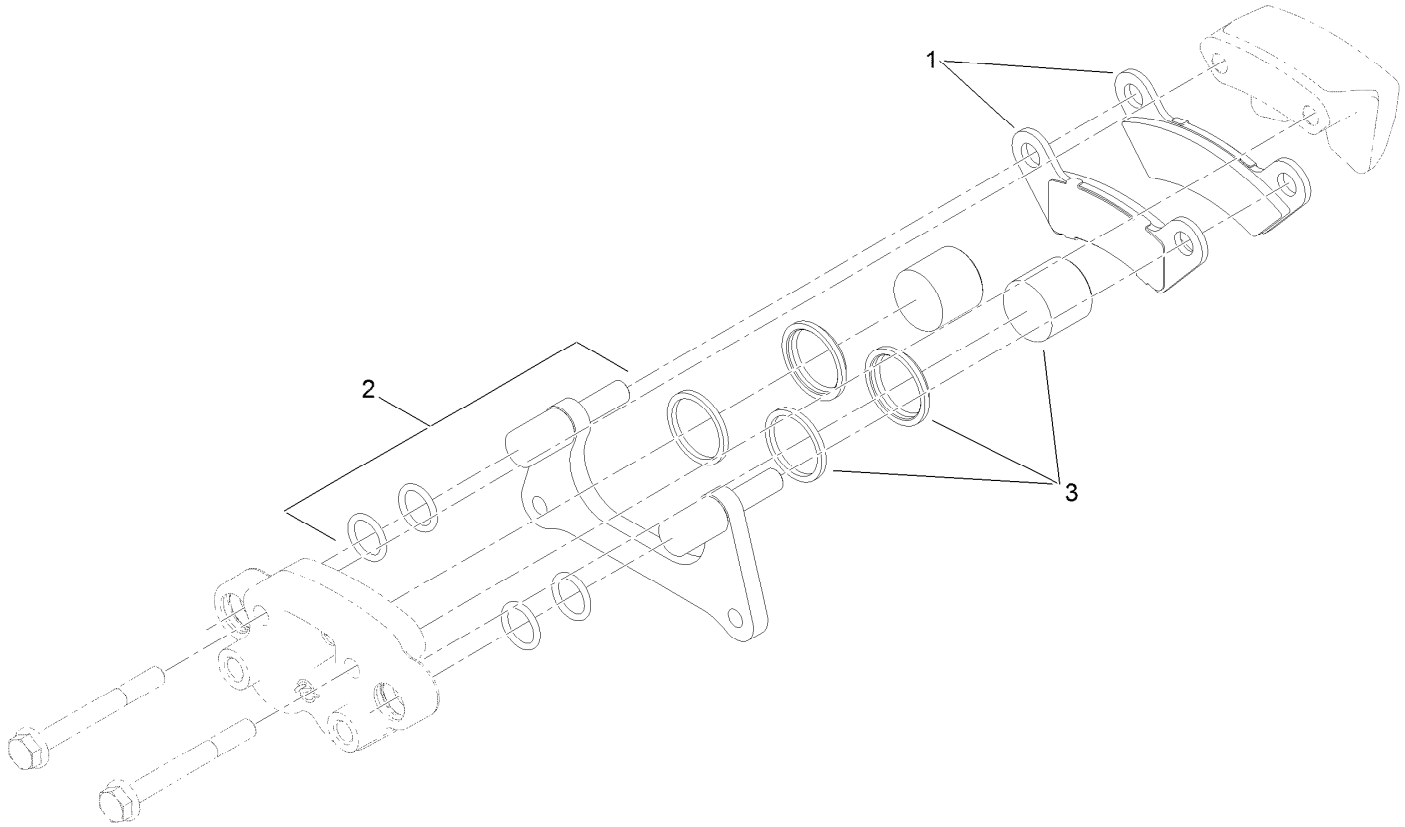


# Brake Caliper Assembly No. 127-7424

| *Ref.* | *Part Number* | *Qty.* | *Description* |
|---|---|---|---|
| 1 | 133-0628 | 1 | Brake Pad Kit |
| 2 | 119-9511 | 1 | Bracket Kit |
| 3 | 133-0614 | 1 | Piston Kit |

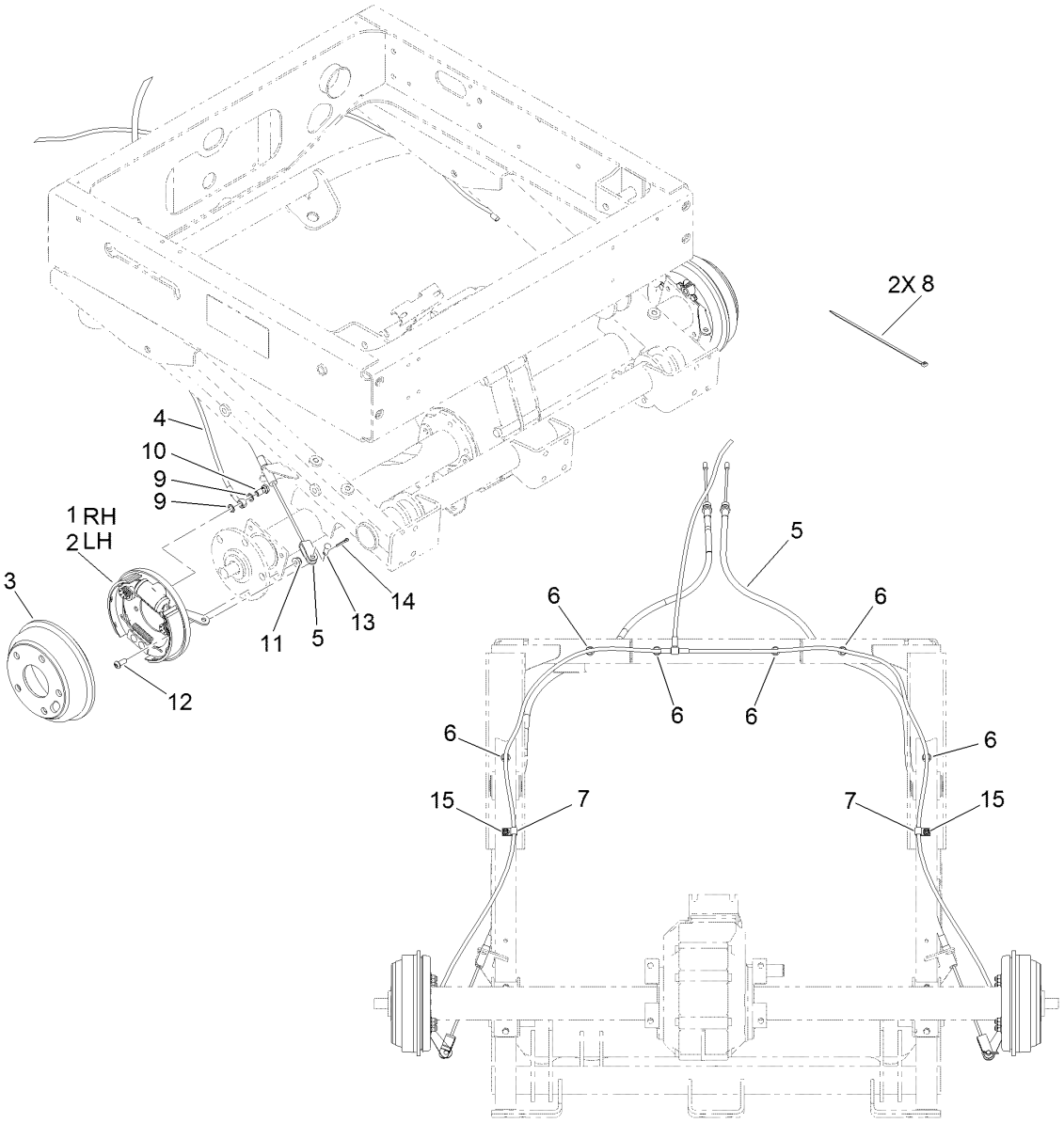


# Rear Brake Assembly

| Ref. | Part Number | Qty. | Description |
|---|---|---|---|
| 1 | 114-8331 | 1 | RH Brake ASM |
| 2 | 114-8332 | 1 | LH Brake ASM |
| 3 | 104-6500 | 2 | Drum-Brake |
| 4 | 112-2926 | 1 | Rear Brake Line ASM |
| 5 | 127-8684 | 2 | Cable-Brake, Adjustable |
| 6 | 32180-030 | 6 | Clip-Tie |
| 7 | 2412-89 | 2 | Clamp-R |
| 8 | 3290-378 | 2 | Tie-Cable |
| 9 | 115-2341 | 4 | Washer-Banjo |
| 10 | 115-2340 | 2 | Bolt-Banjo |
| 11 | 104-8300 | 8 | Nut-HF, NI |
| 12 | 3274-55 | 8 | Screw-HSBH |
| 13 | 283-62 | 2 | Pin-Clevis |
| 14 | 3272-10 | 2 | Pin-Cotter |
| 15 | 32104-17 | 2 | Screw-HWH |

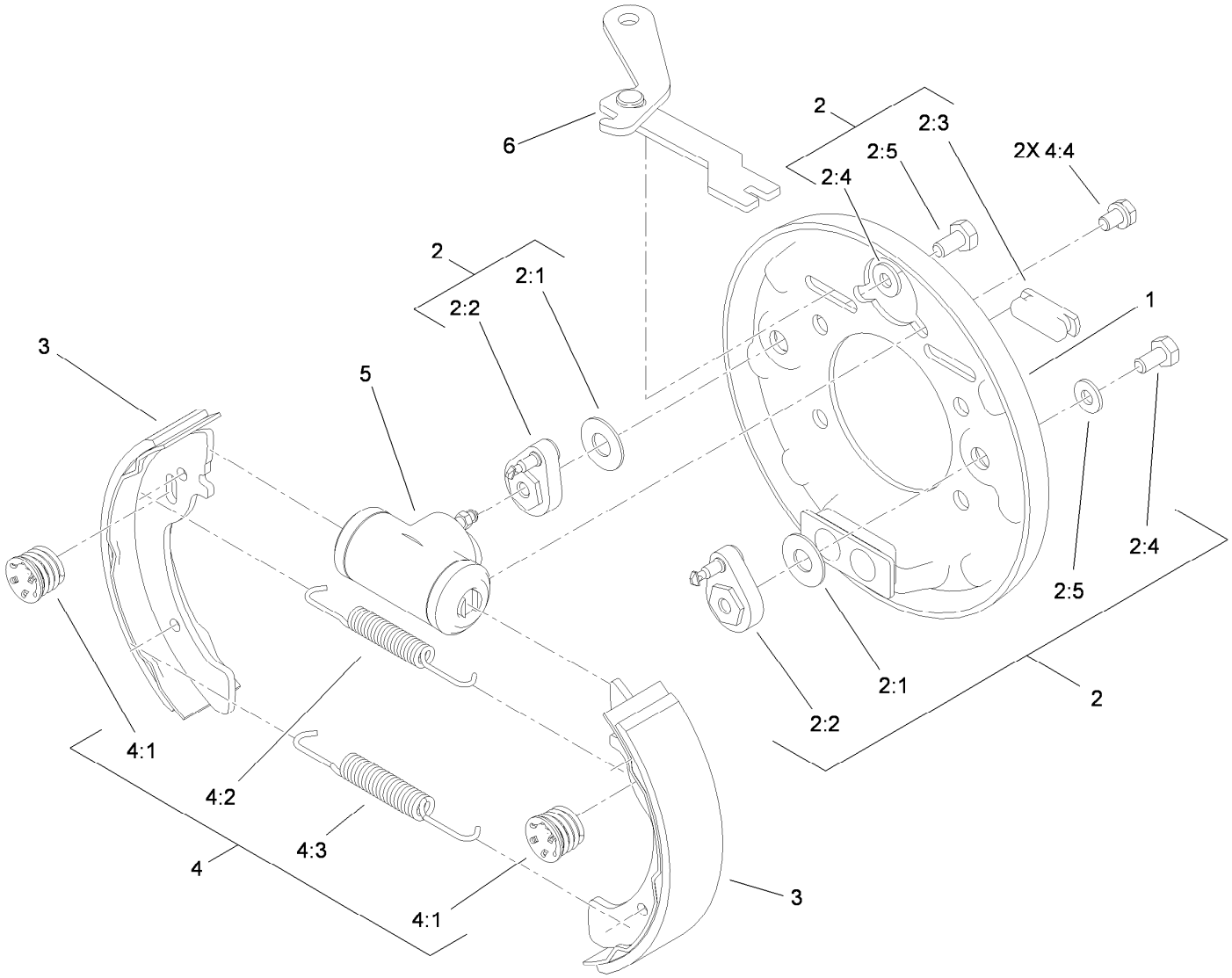


# RH Rear Brake Assembly No. 114-8331

| Ref. | Part Number | Qty. | Description |
|---|---|---|---|
| 1 | 100-8586 | 1 | Backing Plate ASM |
| 2 | 104-6820 | 1 | Adjuster Kit |
| 2:1 | 100-8585 | 2 | Washer-Bellville |
| 2:2 | 100-8588 | 2 | Adjuster Lever ASM |
| 2:3 | 100-8584 | 2 | Cover-Dust |
| 2:4 | | 2 | Washer ● |
| 2:5 | | 2 | Bolt ● |
| 3 | 104-6818 | 4 | Shoe And Lining Kit |
| 4 | 104-6819 | 1 | Hardware Kit |
| 4:1 | 100-8583 | 4 | Shoe Hold Down Spring ASM |
| 4:2 | 100-8581 | 2 | Spring-Upper |
| 4:3 | 100-8582 | 2 | Spring-Lower |
| 4:4 | 139-4494 | 4 | Bolt And Washer ASM |
| 5 | 114-8333 | 1 | Wheel Cylinder ASM |
| 6 | 104-6826 | 1 | RH Park Brake Lever ASM |

● Not serviced separately

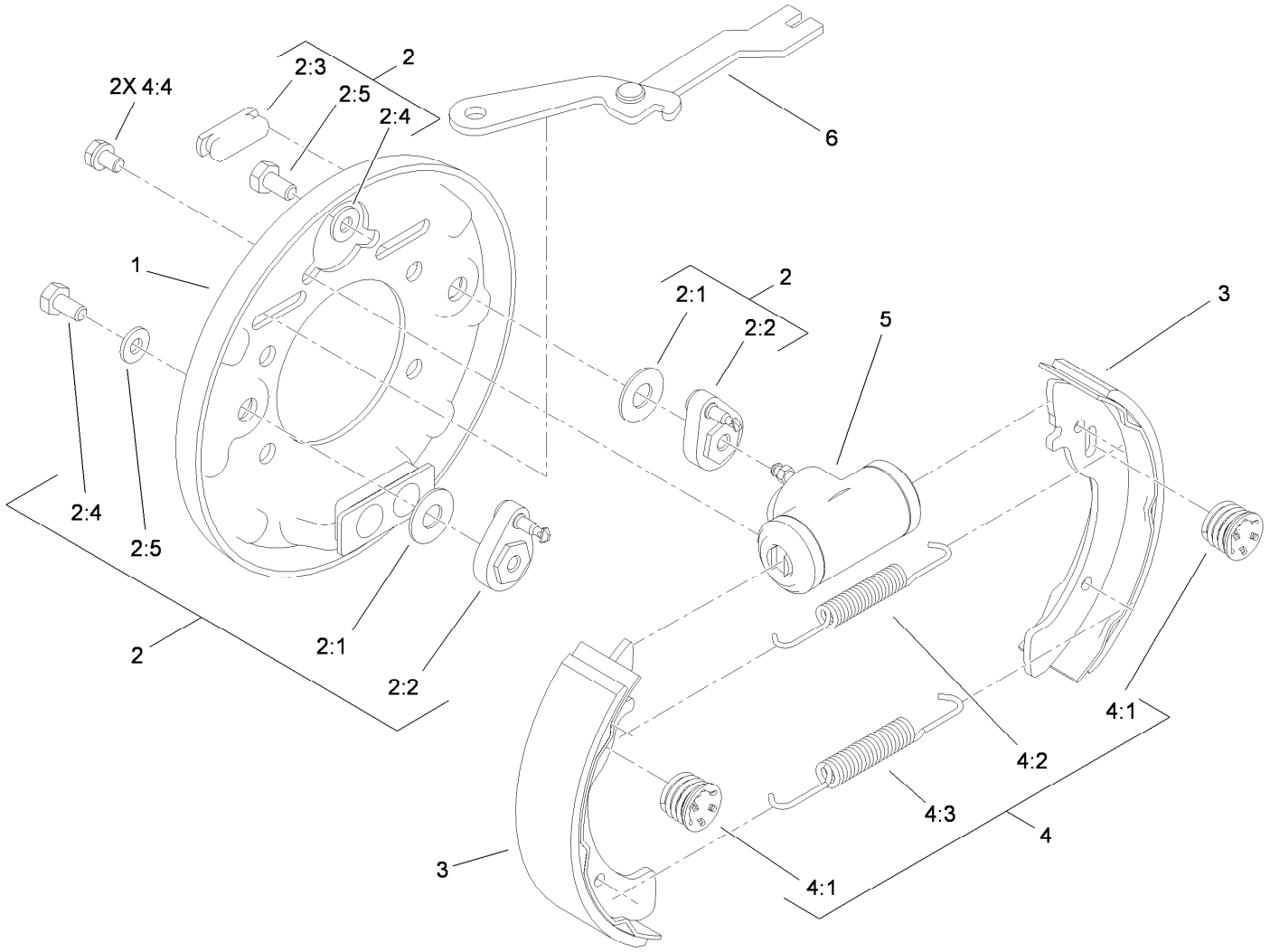


# LH Rear Brake Assembly No. 114-8332

| Ref. | Part Number | Qty. | Description |
|---|---|---|---|
| 1 | 100-8586 | 1 | Backing Plate ASM |
| 2 | 104-6820 | 1 | Adjuster Kit |
| 2:1 | 100-8585 | 2 | Washer-Bellville |
| 2:2 | 100-8588 | 2 | Adjuster Lever ASM |
| 2:3 | 100-8584 | 2 | Cover-Dust |
| 2:4 | | 2 | Washer ● |
| 2:5 | | 2 | Bolt ● |
| 3 | 104-6818 | 4 | Shoe And Lining Kit |
| 4 | 104-6819 | 1 | Hardware Kit |
| 4:1 | 100-8583 | 4 | Shoe Hold Down Spring ASM |
| 4:2 | 100-8581 | 2 | Spring-Upper |
| 4:3 | 100-8582 | 2 | Spring-Lower |
| 4:4 | 139-4494 | 4 | Bolt And Washer ASM |
| 5 | 114-8333 | 1 | Wheel Cylinder ASM |
| 6 | 104-6825 | 1 | LH Park Brake Lever ASM |

● Not serviced separately

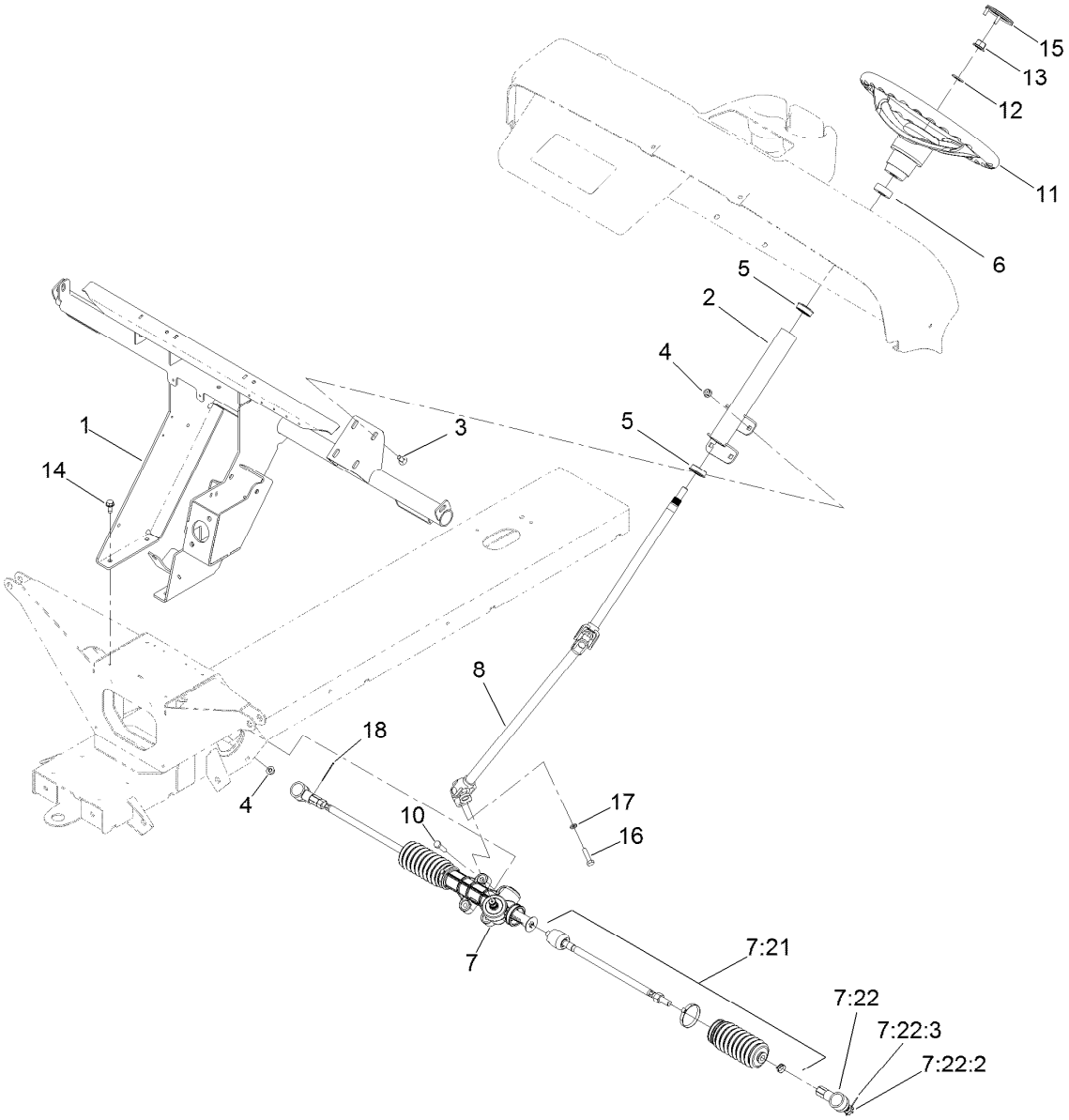


# Steering Assembly

| Ref. | Part Number | Qty. | Description |
|---|---|---|---|
| 1 | 132-6740-03 | 1 | Support-Dash |
| 2 | 139-4635 | 1 | Steering Column ASM, MDX |
| 3 | 3230-1 | 4 | Bolt-CARR |
| 4 | 104-8300 | 8 | Nut-HF, NI |
| 5 | 112-3262 | 2 | Bearing |
| 6 | 21-9260 | 1 | Cover-Dust |
| 7 | 140-4560 | 1 | Steering Rack ASM |
| 7:21 | 140-4594 | 1 | Kit-Tie Rod ASM, MDX |
| 7:22 | 140-4592 | 1 | Kit-Rod End ASM |
| 7:22:2 | 3272-42 | 1 | Pin-Cotter |
| 7:22:3 | 140-2493 | 1 | Nut-Hex, Slotted |

| Ref. | Part Number | Qty. | Description |
|---|---|---|---|
| 8 | 132-6763 | 1 | Shaft-Steering |
| 10 | 322-6 | 4 | Screw-HH |
| 11 | 131-0957 | 1 | Wheel-Steering |
| 12 | 3256-26 | 1 | Washer-Flat |
| 13 | 99-5107 | 1 | Nut-Lock |
| 14 | 32144-70 | 4 | Screw-HWHTF |
| 15 | 131-3630 | 1 | Cap-Wheel, Steering |
| 16 | 116-3515 | 1 | Screw-HH, Special |
| 17 | 3253-4 | 1 | Washer-Lock |
| 18 | 3272-42 | 2 | Pin-Cotter |

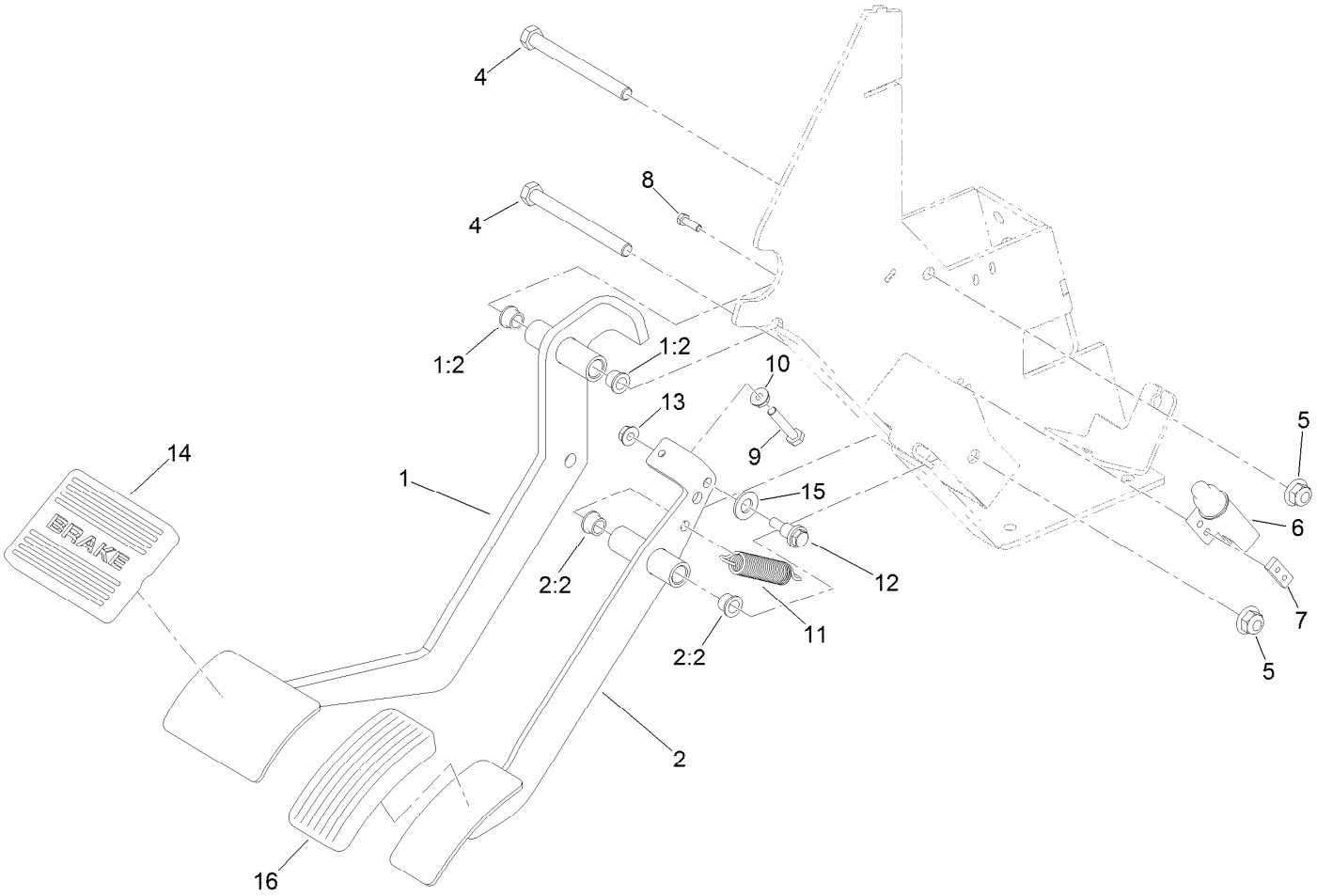


# Pedal Assembly

| Ref. | Part Number | Qty. | Description |
|---|---|---|---|
| 1 | 138-3581 | 1 | Brake Pedal ASM |
| 1:2 | 256-116 | 2 | Bushing-Flange |
| 2 | 138-3582 | 1 | Throttle Pedal ASM, MDX |
| 2:2 | 256-116 | 2 | Bushing-Flange |
| 4 | 323-16 | 2 | Screw-HH |
| 5 | 104-8301 | 2 | Nut-HF, NI |
| 6 | 99-7407 | 1 | Switch |
| 7 | 1-633181 | 1 | Plate-Tapped |
| 8 | 3290-134 | 2 | Screw |

| Ref. | Part Number | Qty. | Description |
|---|---|---|---|
| 9 | 321-13 | 1 | Screw-HH |
| 10 | 32149-2 | 1 | Nut-Keps |
| 11 | 104-6415 | 1 | Spring-Return, Pedal |
| 12 | 104-0858 | 1 | Bolt-Shoulder |
| 13 | 32128-33 | 1 | Nut-HF |
| 14 | 7-3900 | 1 | Pad-Brake |
| 15 | 3256-24 | 1 | Washer-Flat |
| 16 | 140-4572 | 1 | Pedal Pad-Throttle |

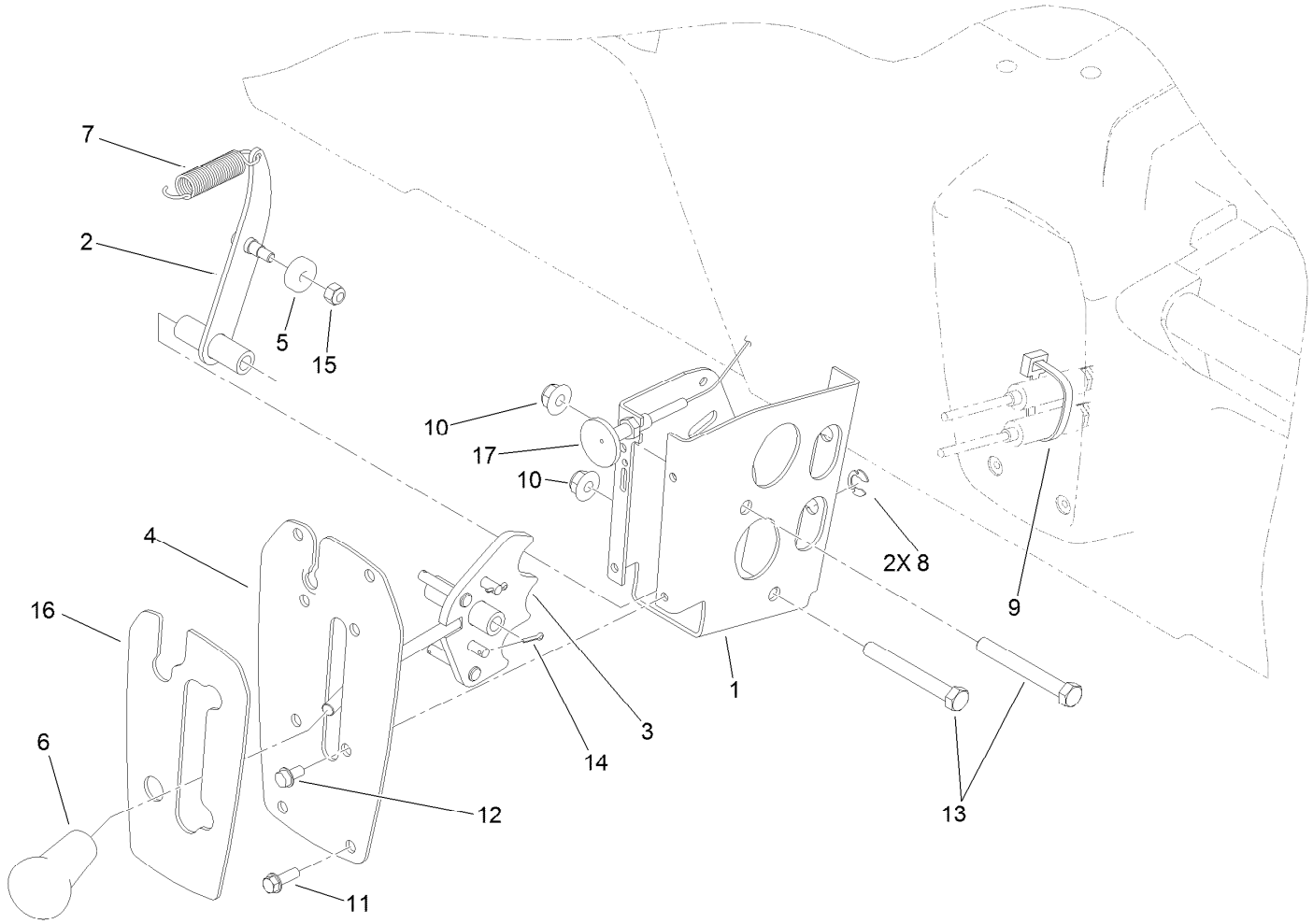


# Shifter Assembly

| Ref. | Part Number | Qty. | Description |
|---|---|---|---|
| 1 | 108-3141-03 | 1 | Bracket-Shift |
| 2 | 108-3138 | 1 | Arm-Detent |
| 3 | 114-2719 | 1 | Plate-Detent |
| 4 | 99-7887-03 | 1 | Plate-Shifter |
| 5 | 251-307 | 1 | Bearing-Ball |
| 6 | 99-7981 | 1 | Knob-Grip, Soft |
| 7 | 104-6415 | 1 | Spring-Return, Pedal |
| 8 | 32151-101 | 2 | E-Ring |
| 9 | 3290-378 | 1 | Tie-Cable |

| Ref. | Part Number | Qty. | Description |
|---|---|---|---|
| 10 | 104-8301 | 2 | Nut-HF, NI |
| 11 | 32105-15 | 4 | Screw-HWH |
| 12 | 32144-4 | 4 | Screw-HWH |
| 13 | 323-14 | 2 | Screw-HH |
| 14 | 3272-5 | 2 | Pin-Cotter |
| 15 | 3296-42 | 1 | Nut-Lock, NI |
| 16 | 99-7952 | 1 | Decal-Shifter |
| 17 | 99-7111 | 1 | Cable-Choke |

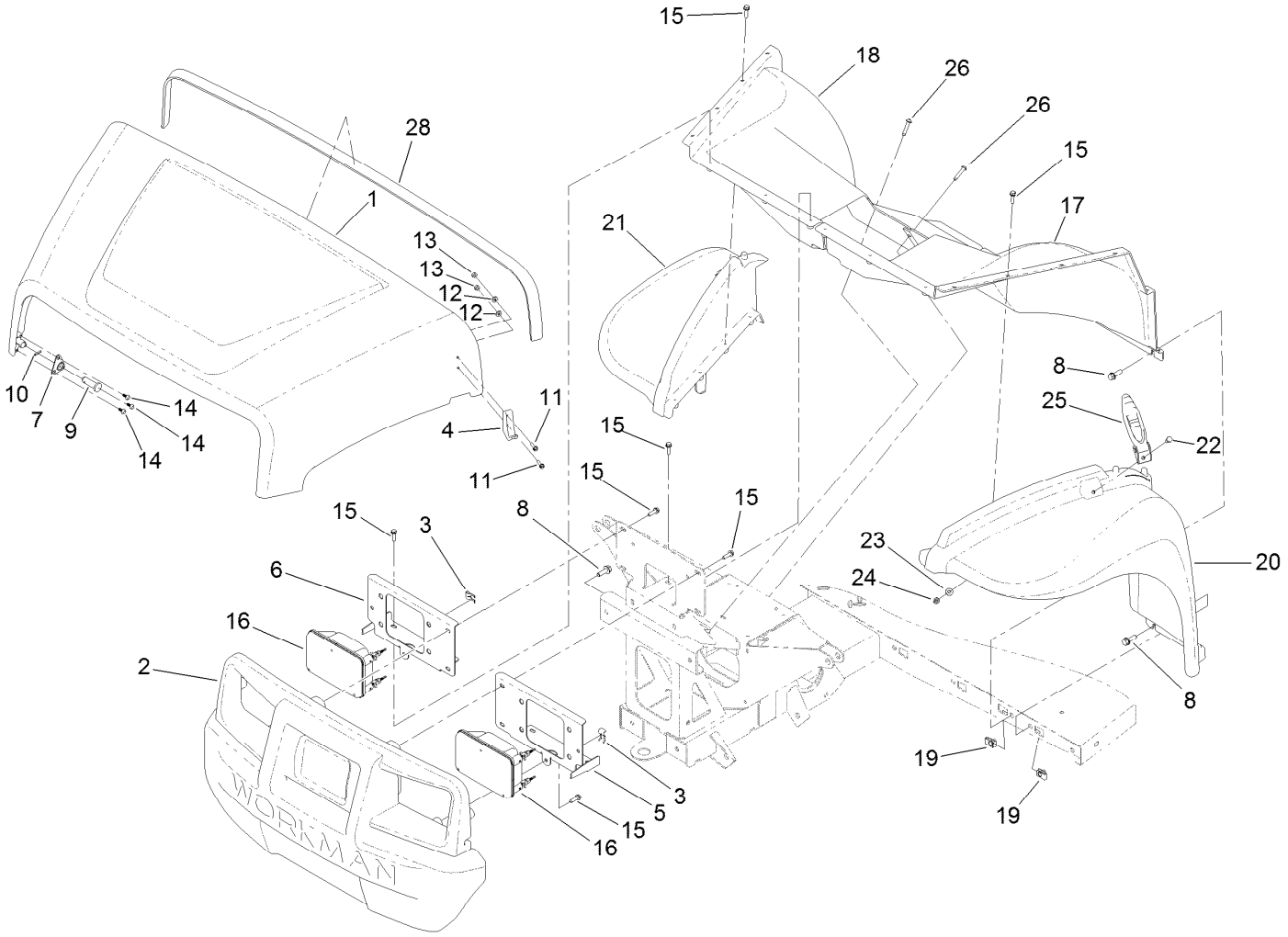


# Hood and Fender Assembly

| Ref. | Part Number | Qty. | Description |
|---|---|---|---|
| 1 | 136-6281 | 1 | Hood |
| 2 | 132-8530 | 1 | Bumper |
| 3 | 115-2408 | 6 | Clip-Speed |
| 4 | 103-2897 | 2 | Latch-Catch |
| 5 | 140-4780-03 | 1 | Bracket-Headlight, LH |
| 6 | 140-4781-03 | 1 | Bracket-Headlight, RH |
| 7 | 112-3308 | 2 | Retainer-Pin |
| 8 | 3234-29 | 12 | Screw-HHF |
| 9 | 117-5094 | 2 | Pin-Clevis |
| 10 | 32121-50 | 2 | Pin-Spring |
| 11 | 32105-13 | 4 | Screw-HWH |
| 12 | 3256-14 | 4 | Washer-Flat |
| 13 | 3296-2 | 4 | Nut-Lock, NI |
| 14 | 121-9605 | 6 | Screw-HWH |

| Ref. | Part Number | Qty. | Description |
|---|---|---|---|
| 15 | 46-8091 | 24 | Screw-HWH |
| 16 | 138-9260 | 2 | Headlight ASM |
| 17 | 132-6775 | 1 | Fender-Inner, LH |
| 18 | 132-6776 | 1 | Fender-Inner, RH |
| 19 | 112-3306 | 10 | Nut |
| 20 | 112-3371 | 1 | Fender-LH |
| 21 | 112-3370 | 1 | Fender-RH |
| 22 | 321-39 | 2 | Screw-HH |
| 23 | 3256-22 | 2 | Washer-Flat |
| 24 | 3296-42 | 2 | Nut-Lock, NI |
| 25 | 115-2416 | 2 | Latch-Rubber |
| 26 | 132-6777 | 4 | Screw-TTH |
| 28 | 115-7635 | 1 | Seal-Foam |

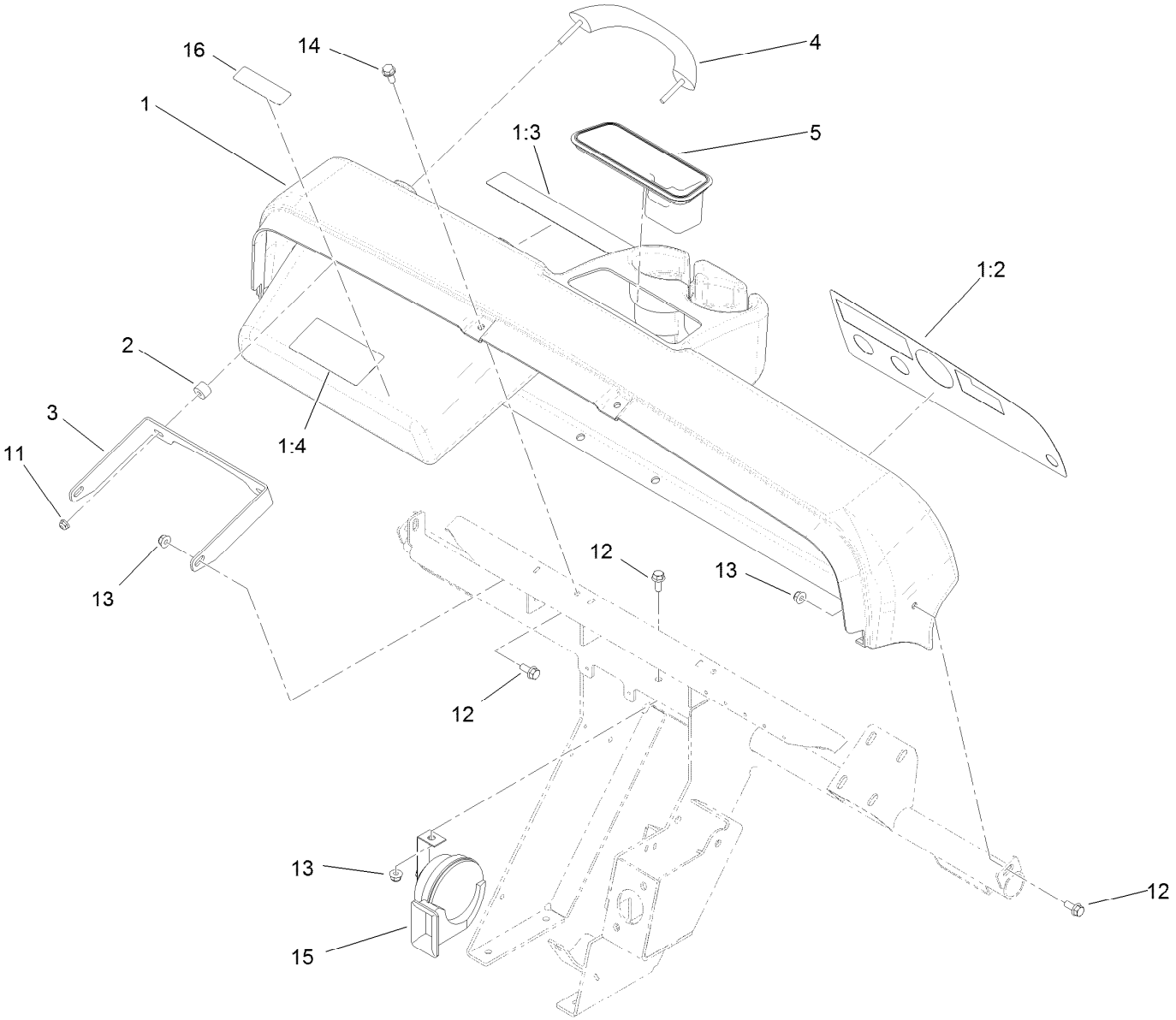


# Dash Assembly

| Ref. | Part Number | Qty. | Description |
|---|---|---|---|
| 1 | 114-8310 | 1 | Dash ASM |
| 1:2 | 138-3521 | 1 | Decal-Panel, Control |
| 1:3 | 121-9775 | 1 | Decal-Danger |
| 1:4 | 115-2412 | 1 | Decal-No Storage |
| 2 | 114-8301 | 2 | Spacer |
| 3 | 112-3391-03 | 1 | Bracket-Grip, Handle |
| 4 | 112-3320 | 1 | Handle-Grip |
| 5 | 104-6930 | 1 | Plug-Rubber |
| 11 | 104-7201 | 2 | Nut-HF |
| 12 | 110-5053 | 4 | Screw-HHF |
| 13 | 104-8300 | 4 | Nut-HF, NI |
| 14 | 32144-70 | 6 | Screw-HWHTF |
| 15 | 110-2594 | 1 | Horn |
| 16 | 136-6313 | 1 | Decal-Block, Fuse |

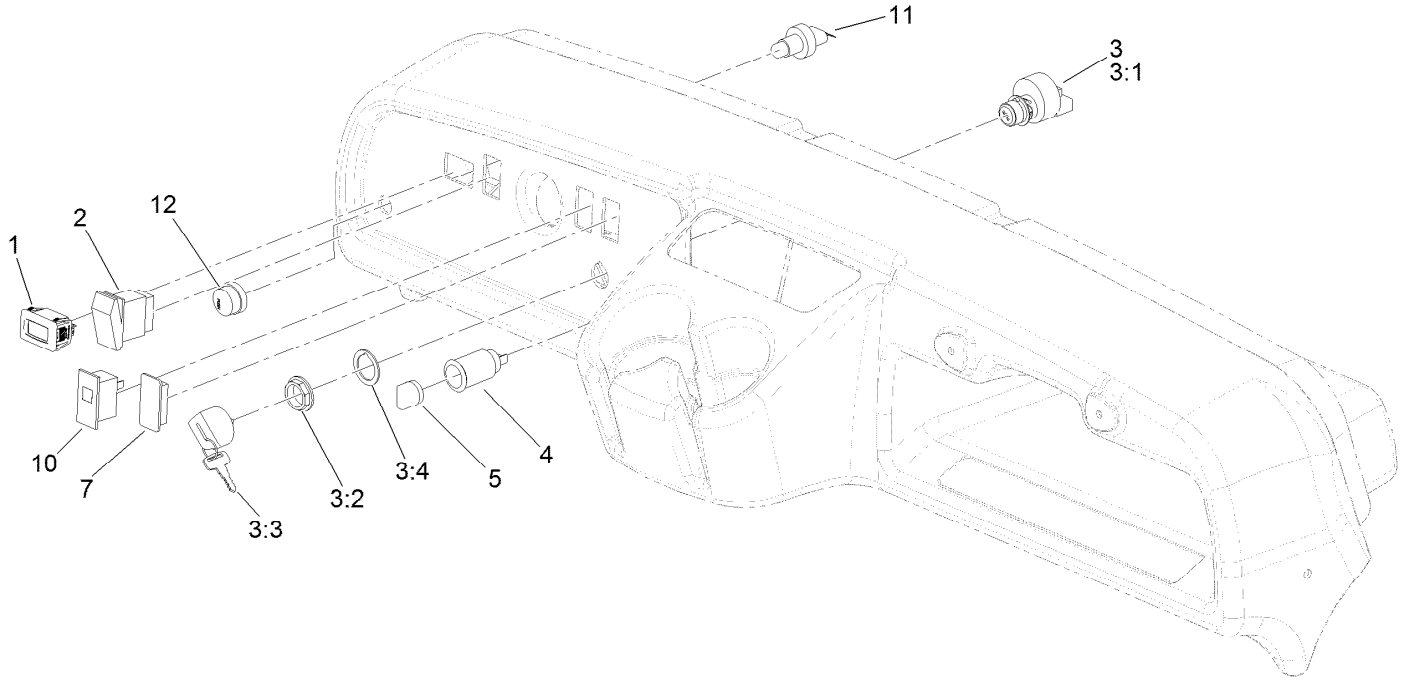


# Control Panel Assembly

| Ref. | Part Number | Qty. | Description |
|---|---|---|---|
| 1 | 120-2244 | 1 | Hourmeter |
| 2 | 95-8999 | 1 | Switch |
| 3 | 122-1145 | 1 | Ignition Switch ASM |
| 3:1 | | 1 | Switch-Ignition ● |
| 3:2 | 108-8660 | 1 | Nut-Mounting |
| 3:3 | 106-5270 | 1 | Ignition Key Set |
| 3:4 | 108-8659 | 1 | Washer-Backup |
| 4 | 99-7411 | 1 | Point-Power |
| 5 | 99-7416 | 1 | Cap |
| 7 | 99-7420 | 1 | Plug-Hole |
| 10 | 99-7410 | 1 | Indicator-Light, Low-Oil Pressure |
| 11 | 112-3324 | 1 | Switch-Horn |
| 12 | 112-3313 | 1 | Nut-Weatherproof |

● Not serviced separately

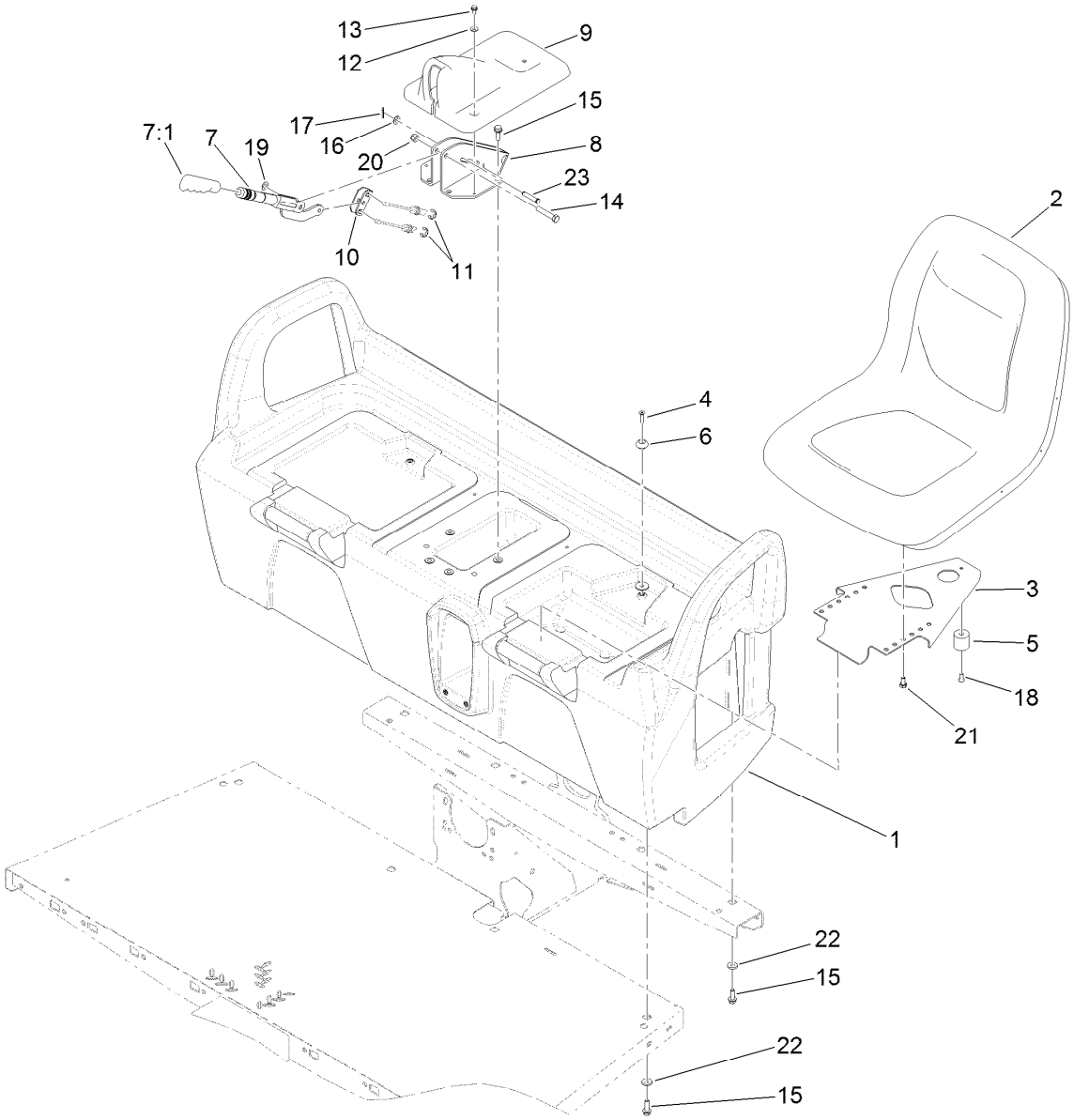


# Seatbase Assembly

| Ref. | Part Number | Qty. | Description |
|---|---|---|---|
| 1 | 104-6847 | 1 | Base-Seat |
| 2 | 133-0577 | 2 | Seat ASM |
| 3 | 99-7829 | 2 | Bracket-Seat |
| 4 | 32108-5 | 2 | Screw-FH |
| 5 | 99-7830 | 2 | Receptical-Rubber |
| 6 | 99-7833 | 2 | Post-Holding |
| 7 | 127-8863 | 1 | Lever-Brake, Park |
| 7:1 | 127-8864 | 1 | Grip-Handle |
| 8 | 104-6844-0P | 1 | Support-Park Brake, Wa |
| 9 | 104-7014 | 1 | Cover-Brake, Parking |
| 10 | 87-3480 | 1 | Bracket-Equalizer, Cable |
| 11 | 32120-47 | 2 | Ring-Retaining, External |

| Ref. | Part Number | Qty. | Description |
|---|---|---|---|
| 12 | 3256-1 | 4 | Washer-Flat |
| 13 | 32144-4 | 2 | Screw-HWH |
| 14 | 323-10 | 1 | Screw-HH |
| 15 | 3234-17 | 12 | Screw-HHF |
| 16 | 3256-23 | 1 | Washer-Plain |
| 17 | 3272-6 | 1 | Pin-Cotter |
| 18 | 3290-412 | 2 | Rivet-Blind |
| 19 | 3290-477 | 1 | Washer-Curved |
| 20 | 3296-39 | 1 | Nut-Lock, NI |
| 21 | 33114-016 | 8 | Screw-HH |
| 22 | 88-7200 | 8 | Washer-Flat |
| 23 | 94-3829 | 1 | Pin-Clevis |

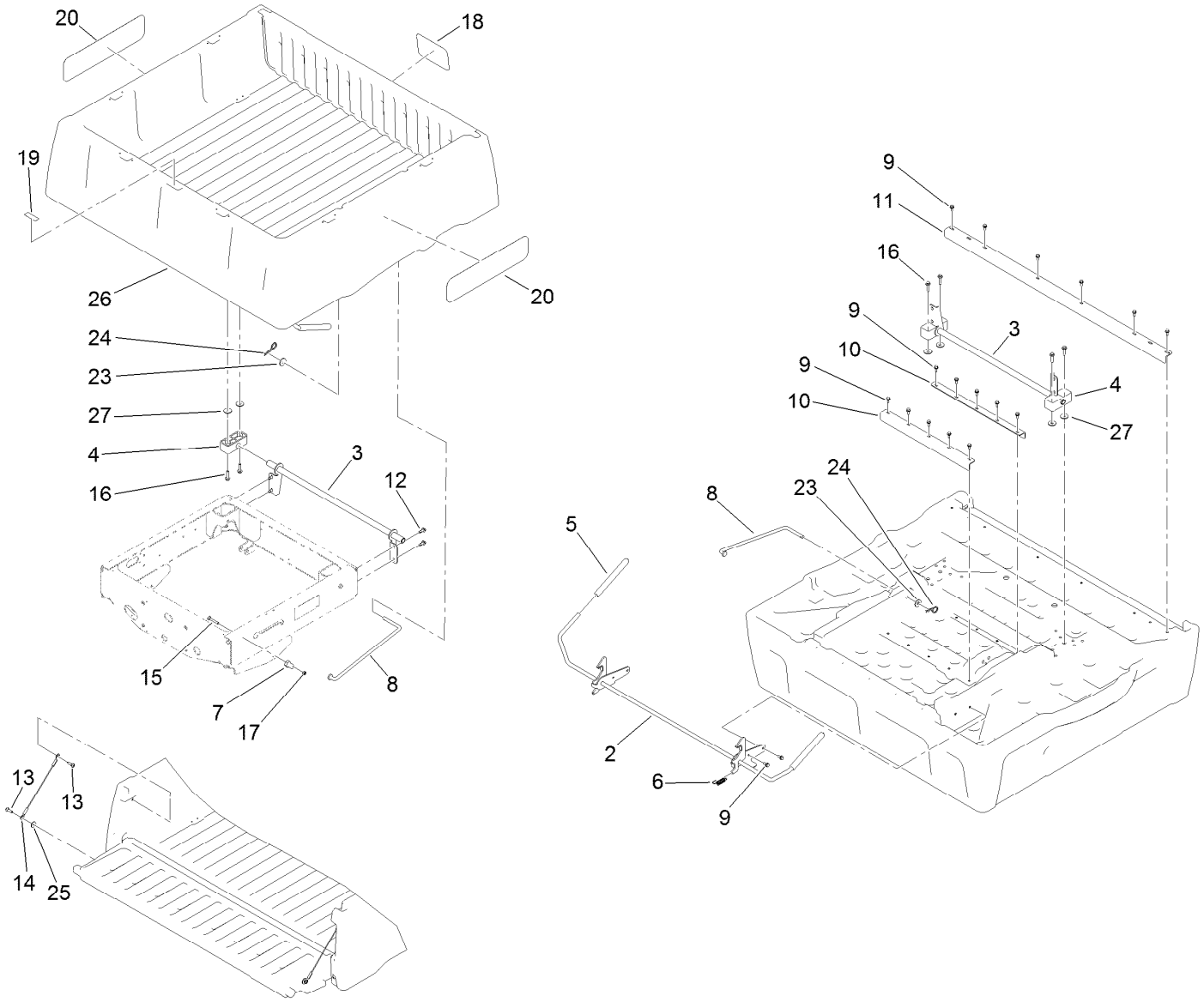


# Cargo Bed Assembly

| Ref. | Part Number | Qty. | Description |
|---|---|---|---|
| 2 | 121-6344 | 1 | Latch |
| 3 | 133-0625-03 | 1 | Bracket-Pivot |
| 4 | 121-6342 | 2 | Bushing-Pivot |
| 5 | 119-9627 | 2 | Grip-Handle |
| 6 | 5-7290 | 2 | Spring-Tension |
| 7 | 104-7248 | 2 | Pin-Latch |
| 8 | 121-6316 | 1 | Rod-Prop |
| 9 | 3234-5 | 20 | Screw-HHF |
| 10 | 121-6314-03 | 2 | Brace-Bed, Middle |
| 11 | 121-6315-03 | 1 | Brace-Bed, Rear |
| 12 | 105-6245 | 4 | Screw-Tapping |
| 13 | 119-2267 | 4 | Screw-Shoulder, BHTF |

| Ref. | Part Number | Qty. | Description |
|---|---|---|---|
| 14 | 121-6343 | 2 | Lanyard-Tailgate |
| 15 | 3230-7 | 2 | Bolt-CARR |
| 16 | 3234-18 | 4 | Screw-HHF |
| 17 | 3296-29 | 2 | Nut-Lock, NI |
| 18 | 104-7213 | 1 | Decal |
| 19 | 115-7739 | 1 | Decal-No Riders |
| 20 | 119-9450 | 2 | Decal |
| 23 | 110-6147 | 1 | Washer-Flat |
| 24 | 107-3155 | 1 | Hairpin |
| 25 | 115-7109 | 2 | Washer-Flat |
| 26 | 133-0560 | 1 | Cargo Bed/Tailgate ASM |
| 27 | 87-5330 | 4 | Washer |

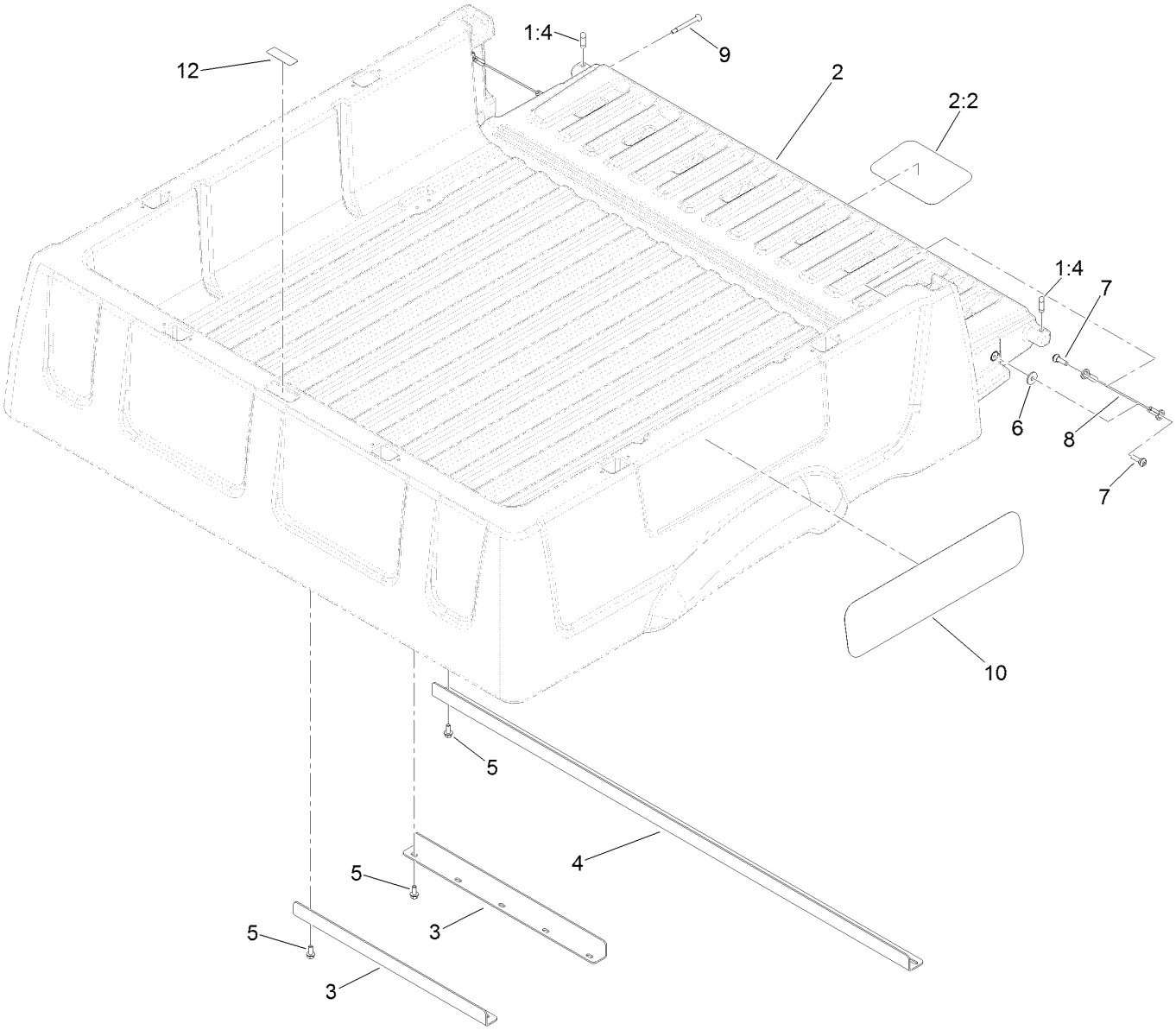


# Cargo Bed and Tailgate Service Assembly No. 133-0560

| Ref. | Part Number | Qty. | Description |
|---|---|---|---|
| 1 | | 1 | Cargo Bed/Tailgate ASM ●■ |
| 1:4 | 133-7146 | 2 | Plug-Tailgate, Anti-Rattle |
| 2 | 133-0561 | 1 | Tailgate ASM W/Decals |
| 2:2 | 104-7213 | 1 | Decal |
| 3 | 121-6314-03 | 2 | Brace-Bed, Middle |
| 4 | 121-6315-03 | 1 | Brace-Bed, Rear |
| 5 | 3234-5 | 16 | Screw-HHF |
| 6 | 115-7109 | 2 | Washer-Flat |
| 7 | 119-2267 | 4 | Screw-Shoulder, BHTF |
| 8 | 121-6343 | 2 | Lanyard-Tailgate |
| 9 | 127-7383 | 2 | Screw-Shoulder, Bh (Torx) |
| 10 | 120-4825 | 2 | Decal |
| 12 | 115-7739 | 1 | Decal-No Riders |

● Not illustrated

■ Not serviced separately

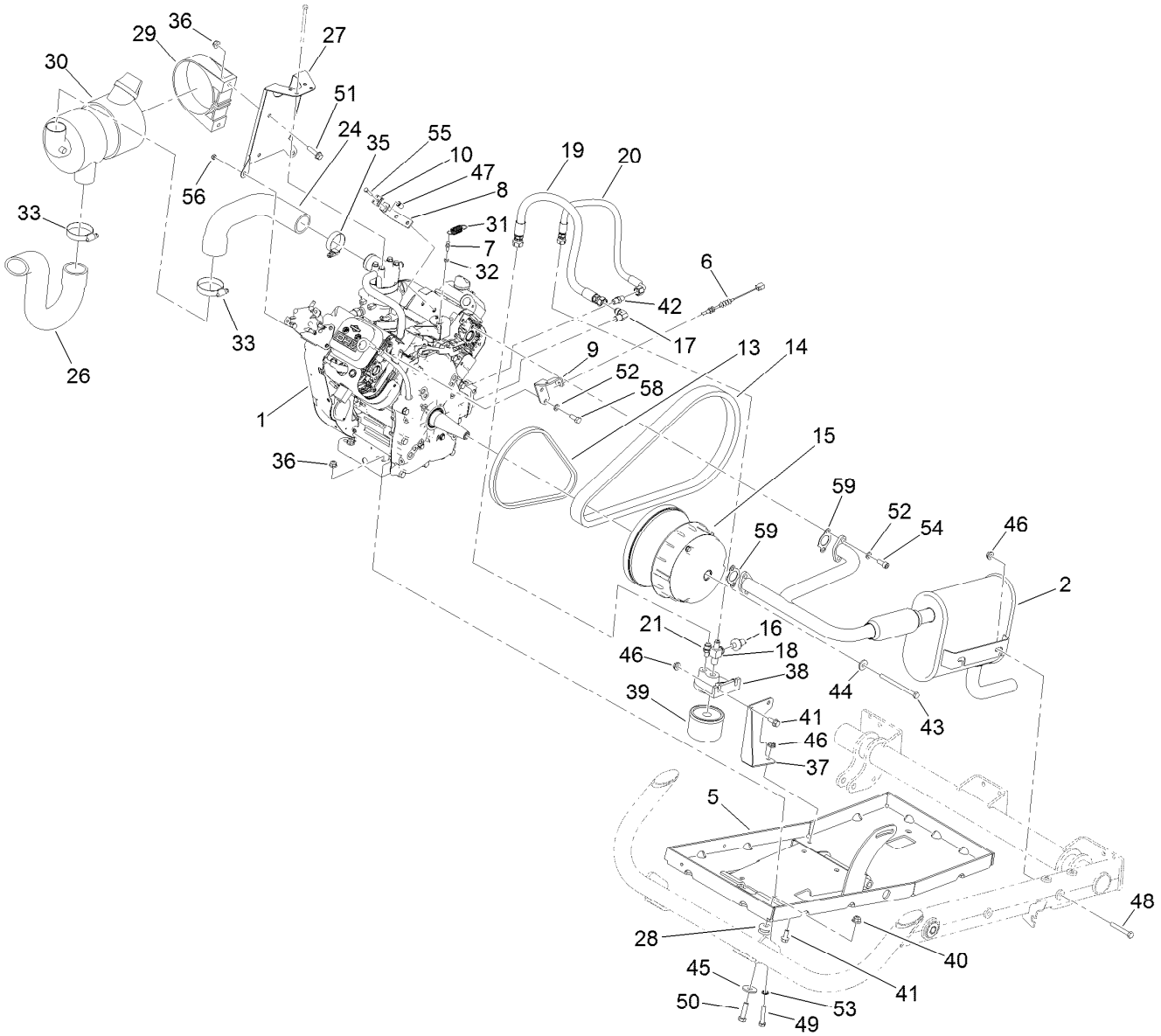


# Engine, Clutch and Air Cleaner Assembly

| Ref. | Part Number | Qty. | Description |
|---|---|---|---|
| 1 | 140-2599 | 1 | Engine-Briggs And Stratton ● |
| 2 | 139-3399 | 1 | MDX Exhaust ASM |
| 5 | 119-0709-03 | 1 | Tray-Engine |
| 6 | 115-7612 | 1 | Cable-Accelerator |
| 7 | 99-7847 | 1 | Ball-Stud |
| 8 | 107-0319 | 1 | Bracket-Cable |
| 9 | 115-2393 | 1 | Bracket-Cable |
| 10 | 81-1690 | 1 | Clamp-Cable |
| 13 | 121-9778 | 1 | Belt-V |
| 14 | 136-6296 | 1 | Belt-Variable |
| 15 | 138-0094 | 1 | Clutch-Primary |
| 16 | 115-2316 | 1 | Switch-Pressure F/W |
| 17 | 115-2317 | 1 | Fitting-Elbow |
| 18 | 119-0826 | 1 | Fitting-Tee |
| 19 | 119-0831 | 1 | Hose-HYD |
| 20 | 119-0832 | 1 | Hose-HYD |
| 21 | 119-0833 | 1 | Fitting-Straight |

| Ref. | Part Number | Qty. | Description |
|---|---|---|---|
| 24 | 131-6696 | 1 | Hose-Air Intake |
| 26 | 115-7623 | 1 | Hose-Intake |
| 27 | 132-6796-03 | 1 | Bracket-Cleaner, Air |
| 28 | 63-9750 | 2 | Mount |
| 29 | 95-5806 | 1 | Bracket-Mounting, Air Cleaner |
| 30 | 99-7120 | 1 | Air Cleaner ASM |
| 31 | 71-5470 | 1 | Spring-Brake |
| 32 | 110-2619 | 1 | Keeper-Spring |
| 33 | 2412-130 | 2 | Clamp-Hose |
| 35 | 2412-3 | 1 | Clamp-Hose |
| 36 | 104-8300 | 6 | Nut-HF, NI |
| 37 | 112-3240-03 | 1 | Bracket-Filter, Oil |
| 38 | 115-2314 | 1 | Adapter-Filter, Oil |
| 39 | 107-7817 | 1 | Filter-Oil, Engine |
| 40 | 104-8301 | 2 | Nut-HF, NI |
| 41 | 110-5053 | 4 | Screw-HHF |
| 42 | 112-3282 | 1 | Fitting-Straight |

● Obtain parts from www.briggsandstratton.com

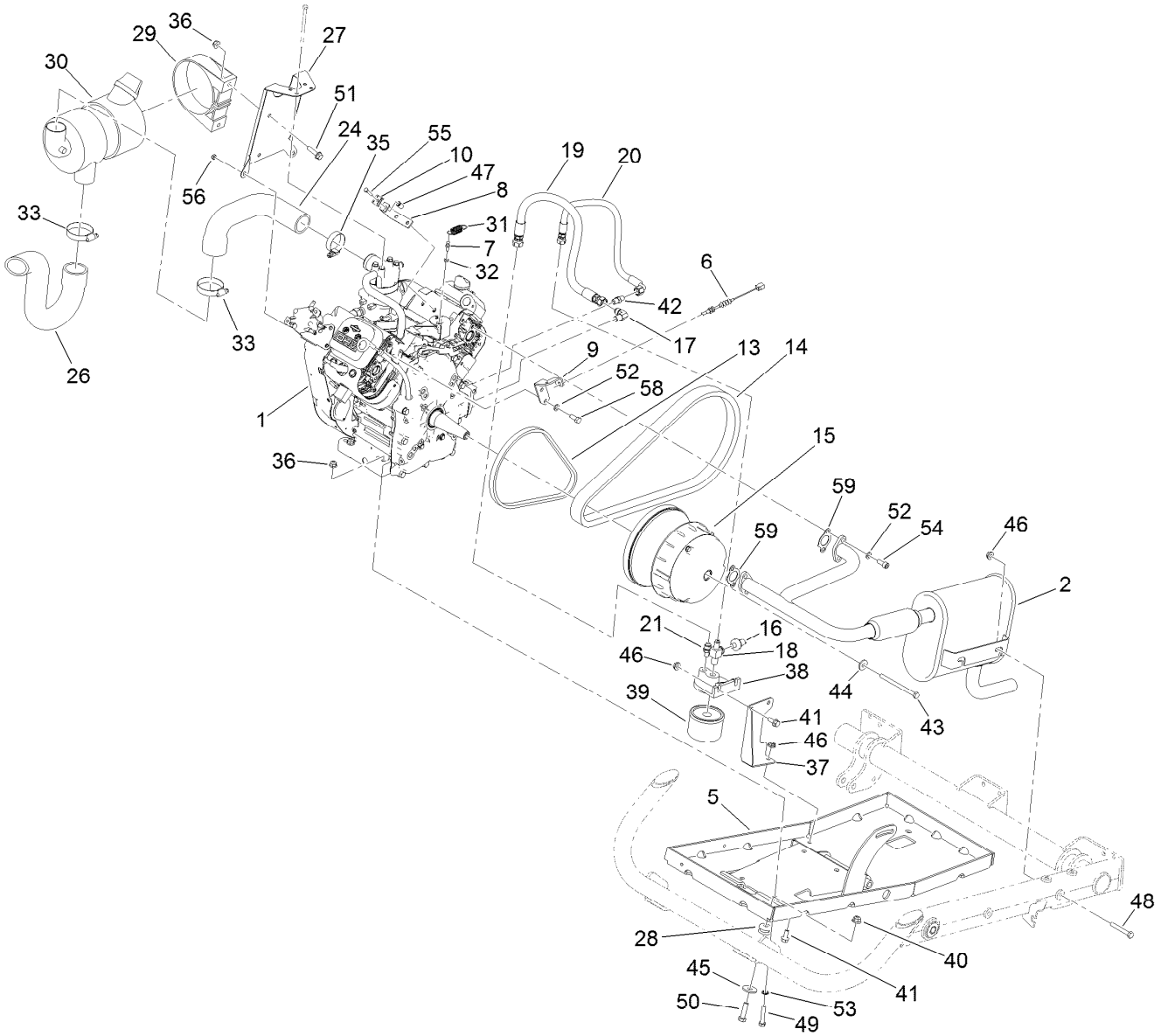


# Engine, Clutch and Air Cleaner Assembly (continued)

| Ref. | Part Number | Qty. | Description |
|---|---|---|---|
| 43 | 119-0722 | 1 | Screw-HH |
| 44 | 119-0724 | 1 | Washer-Flange |
| 45 | 2844 | 2 | Washer |
| 46 | 32128-20 | 6 | Nut-HF |
| 47 | 32148-14 | 1 | Nut-Clinch |
| 48 | 139-4479 | 2 | Screw-HHF |
| 49 | 322-9 | 4 | Screw-HH |
| 50 | 323-8 | 2 | Screw-HH |

| Ref. | Part Number | Qty. | Description |
|---|---|---|---|
| 51 | 3234-36 | 2 | Screw-HHF |
| 52 | 3253-4 | 6 | Washer-Lock |
| 53 | 3254-2 | 2 | Washer-Lock, Internal |
| 54 | 108-6343 | 4 | Screw-Cap, HSH |
| 55 | 3290-432 | 1 | Screw-HH |
| 56 | 33023-00 | 2 | Nut-Lock |
| 58 | 66-3160 | 2 | Screw-Cap |
| 59 | 140-2557 | 2 | Gasket-Exhaust, MDX |

● Obtain parts from www.briggsandstratton.com

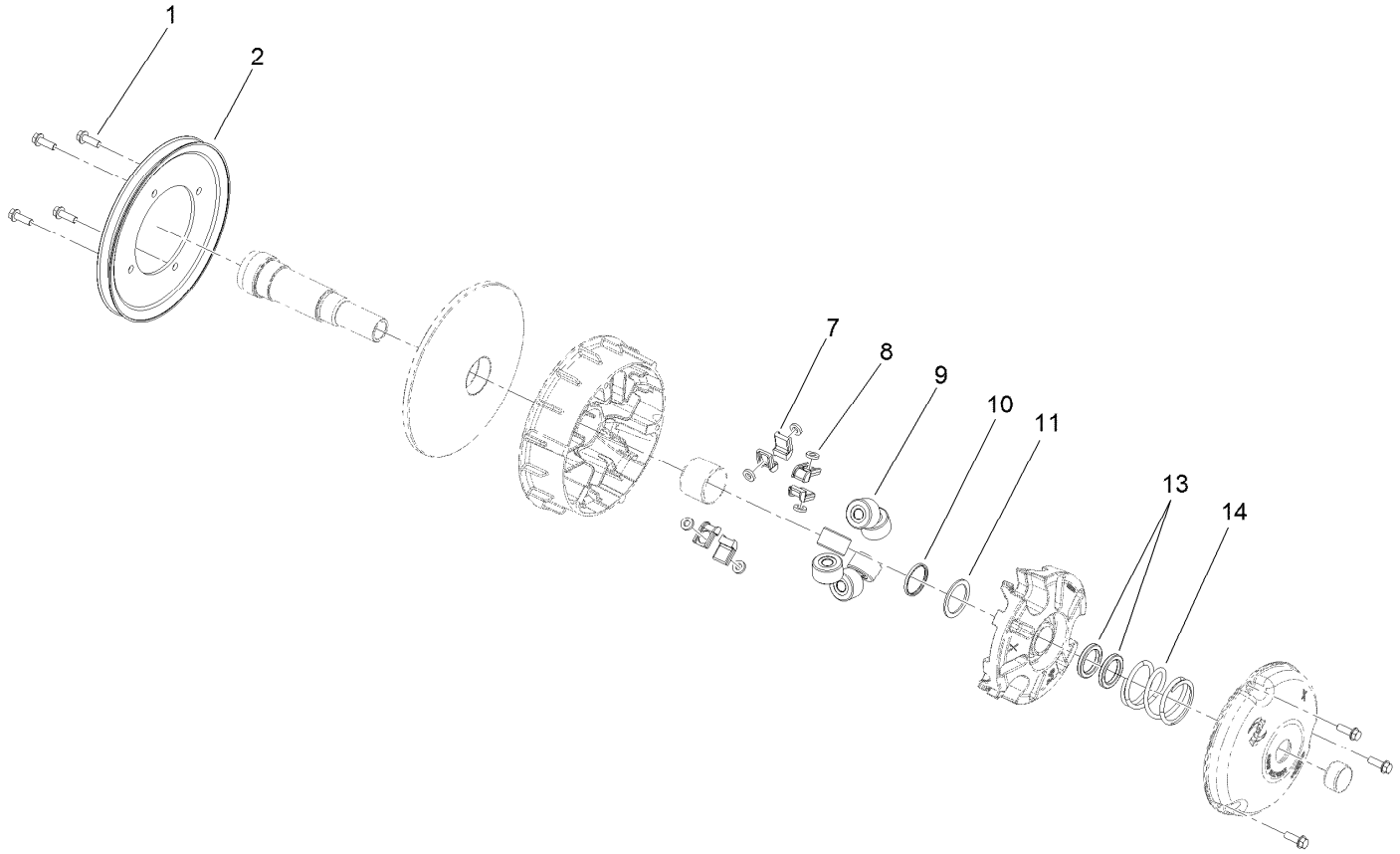


# Primary Clutch Assembly No. 138-0094

| *Ref.* | *Part Number* | *Qty.* | *Description* |
|---|---|---|---|
| 1 | 49-2040 | 7 | Screw-HWHTF |
| 2 | 119-0813 | 1 | Pulley-Primary |
| 7 | 127-8689 | 6 | Button-Primary, Torque |
| 8 | 127-8690 | 6 | Plug-Button, Torque |
| 9 | 119-0804 | 6 | Weight-Roller |
| 10 | 119-0815 | 1 | Shim-Spider |
| 11 | 119-0812 | 1 | Shim-Spider |
| 13 | 119-0807 | 2 | Shim-Limiter |
| 14 | 119-9532 | 1 | Spring-Red/White |

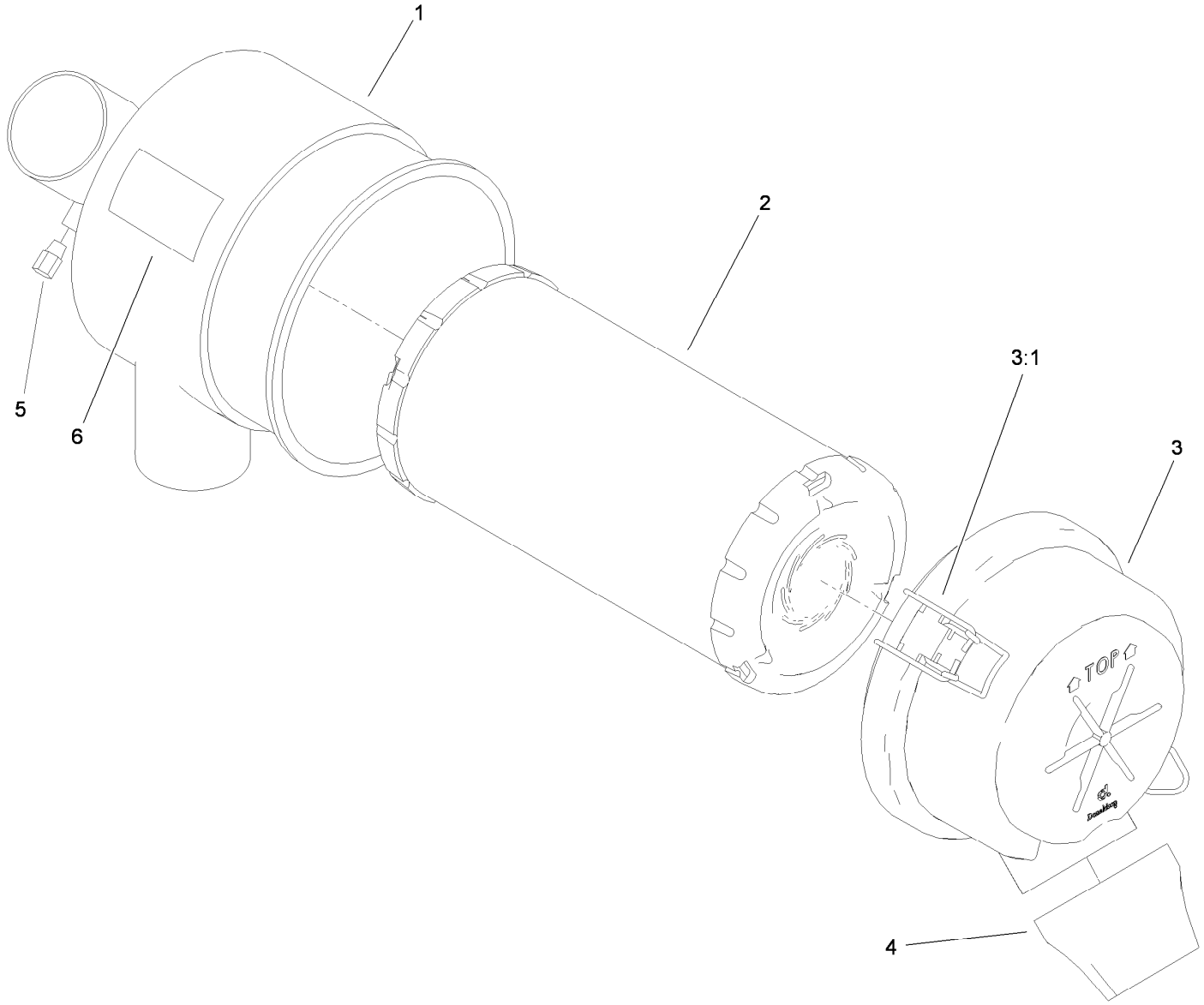


# Air Cleaner Assembly No. 99-7120

| Ref. | Part Number | Qty. | Description |
|---|---|---|---|
| 1 | | 1 | Body ● |
| 2 | 108-3811 | 1 | Filter-Air |
| 3 | 94-3652 | 1 | Cover ASM |
| 3:1 | 1-643283 | 2 | Latch-Cleaner, Air |
| 4 | 87-9400 | 1 | Valve-Vacuator |
| 5 | | 1 | Plug ● |
| 6 | | 1 | Marking ● |

● Not serviced separately

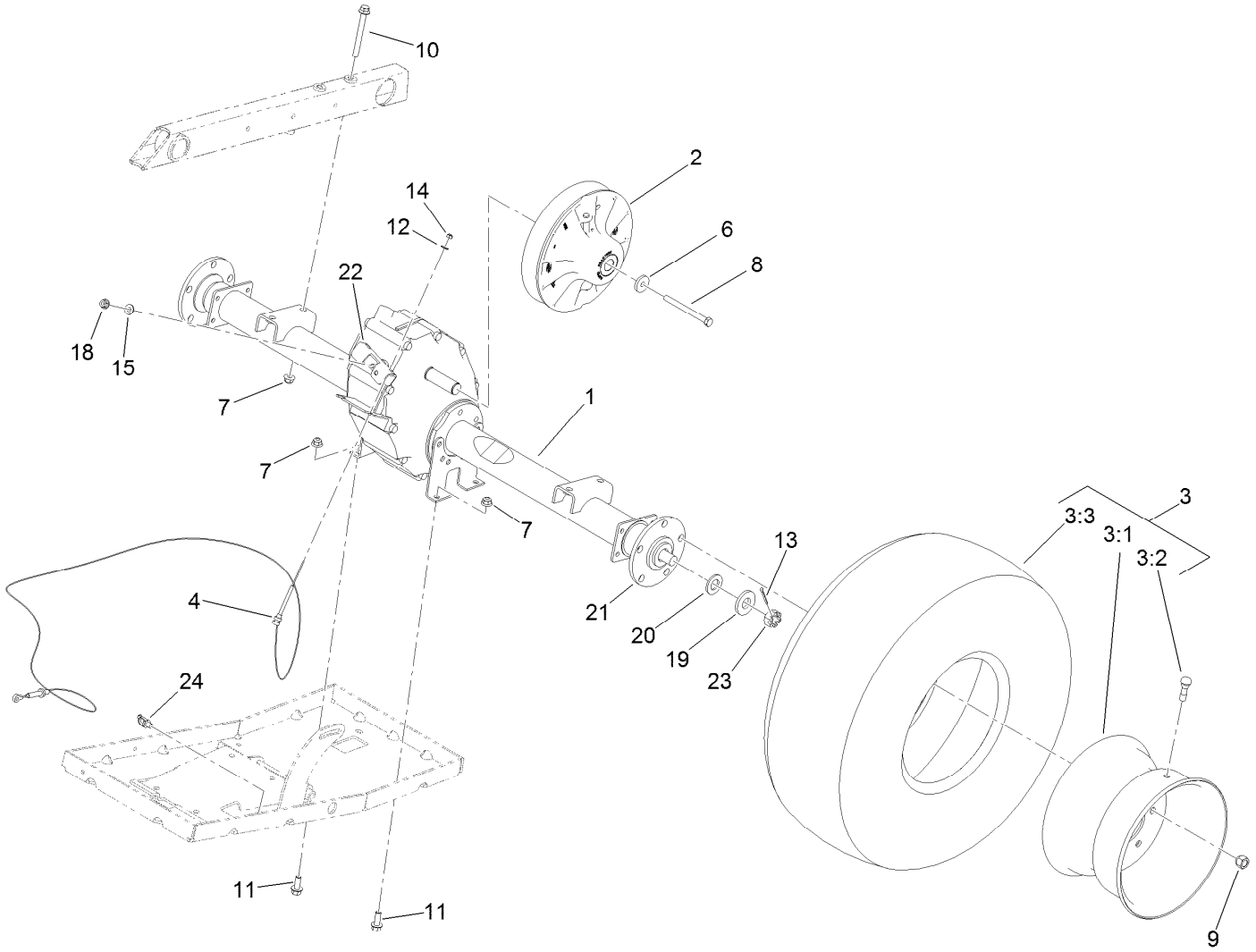


# Rear Axle Drive System Assembly

| Ref. | Part Number | Qty. | Description |
|---|---|---|---|
| 1 | 119-0760 | 1 | Transaxle ASM |
| 2 | 136-6289 | 1 | Clutch-Secondary |
| 3 | 131-8434 | 2 | Tire And Wheel ASM |
| 3:1 | 131-8435 | 1 | Wheel |
| 3:2 | 232-27 | 1 | Stem-Valve |
| 3:3 | 131-6667 | 1 | Tire (24 X 12.00-10) 4P K506 |
| 4 | 115-7679 | 2 | Cable-Control, Tension |
| 6 | 104-6563 | 1 | Washer-Stepped |
| 7 | 104-8301 | 8 | Nut-HF, NI |
| 8 | 119-0723 | 1 | Screw-HH, Lock |
| 9 | 242-50 | 10 | Nut-Lug |
| 10 | 116-4701 | 4 | Screw-HHF |
| 11 | 3234-11 | 4 | Screw-HHF |
| 12 | 3256-49 | 2 | Washer-Plain |
| 13 | 3272-12 | 2 | Pin-Cotter |
| 14 | 3296-2 | 2 | Nut-Lock, NI |
| 15 | 87-8640 | 1 | Washer-Flat |
| 18 | 104-1672 | 1 | Nut-Lock |
| 19 | 133-0632 | 2 | Spacer |
| 20 | 104-1674 | 2 | Washer |
| 21 | 104-1675 | 2 | Hub |
| 22 | 104-6860 | 1 | Lever-Select |
| 23 | 104-1656 | 2 | Nut-Castle |
| 24 | 32180-030 | 1 | Clip-Tie |

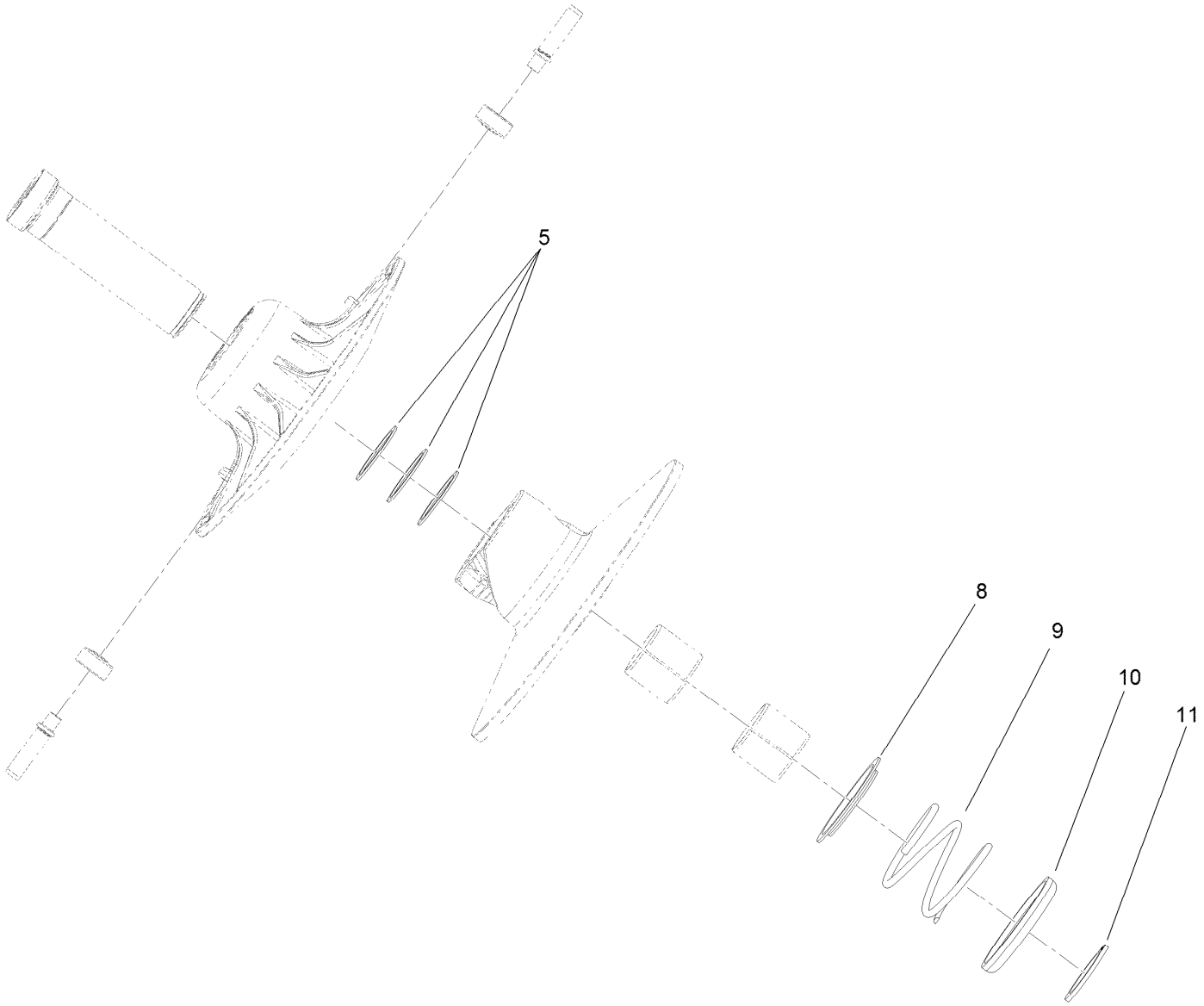


# Secondary Clutch Assembly No. 136-6289

| *Ref.* | *Part Number* | *Qty.* | *Description* |
|---|---|---|---|
| 5 | 119-6018 | 3 | Shim-Thrust |
| 8 | 119-0809 | 1 | Cup-Spring Retainer, Inner |
| 9 | 119-9360 | 1 | Spring-Compression, Black/Almond |
| 10 | 119-0810 | 1 | Cup-Spring Retainer, Outer |
| 11 | 119-0811 | 1 | Ring-Retaining |

# Transaxle Assembly No. 119-0760

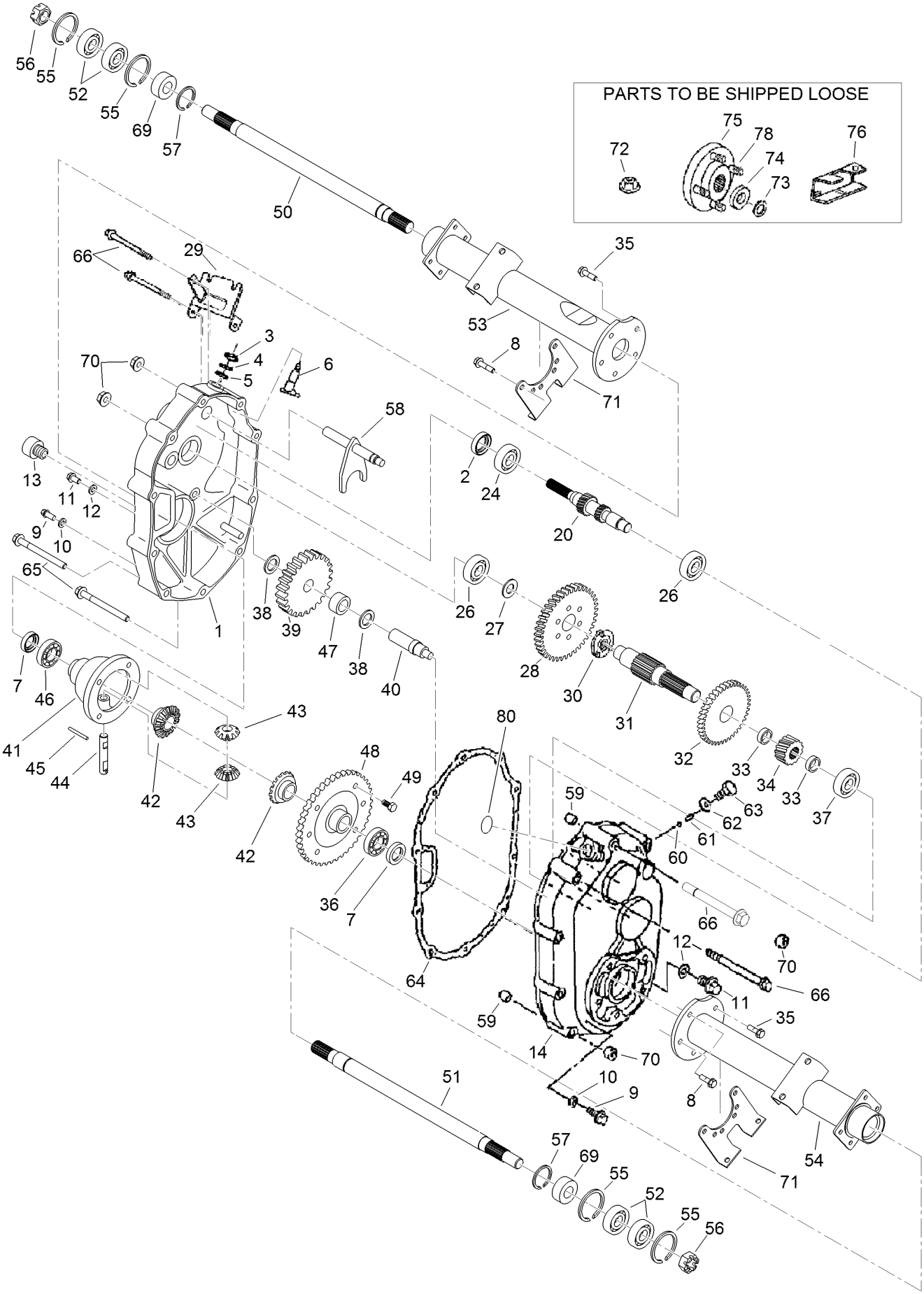

# Transaxle Assembly No. 119-0760 (continued)

| Ref. | Part Number | Qty. | Description |
|---|---|---|---|
| 1 | 104-1601 | 1 | Case-LH, Complete |
| 2 | 104-1602 | 1 | Seal-Oil |
| 3 | 104-1603 | 1 | Seal-Oil |
| 4 | 104-1604 | 1 | Ring-Snap |
| 5 | 104-1605 | 1 | Spacer |
| 6 | 104-1606 | 1 | Shaft-Selector |
| 7 | 104-1607 | 2 | Seal-Oil |
| 8 | 104-1608 | 4 | Bolt-Flange |
| 9 | 104-1609 | 2 | Plug-Check, Oil |
| 10 | 104-1610 | 2 | Gasket |
| 11 | 104-1611 | 2 | Plug-Drain, Oil |
| 12 | 104-1612 | 2 | Gasket |
| 13 | 104-1613 | 1 | Plug-Filler, Oil |
| 14 | 104-1614 | 1 | Case-Complete, RH |
| 20 | 104-7002 | 1 | Shaft-Input, Complete |
| 24 | 104-1624 | 1 | Bearing-Ball |
| 26 | 104-1626 | 2 | Bearing-Ball |
| 27 | 104-1627 | 1 | Spacer |
| 28 | 104-1628 | 1 | Gear |
| 29 | 104-1629 | 1 | Bracket-Wire, Change |
| 30 | 104-1630 | 1 | Clutch-Pin |
| 31 | 104-1631 | 1 | Shaft-Center |
| 32 | 104-1632 | 1 | Gear |
| 33 | 104-1633 | 2 | Collar |
| 34 | 104-1634 | 1 | Gear |
| 35 | 104-1635 | 6 | Bolt-Flange |
| 36 | 104-1636 | 1 | Bearing-Ball |
| 37 | 104-1637 | 1 | Bearing-Ball |
| 38 | 104-1638 | 2 | Spacer |
| 39 | 104-1639 | 1 | Gear |
| 40 | 104-1640 | 1 | Shaft-Counter |
| 41 | 104-1641 | 1 | Case-Differential |
| 42 | 104-1642 | 2 | Gear-Side, Differential |
| 43 | 104-1643 | 2 | Pinion-Differential |
| 44 | 104-1644 | 1 | Shaft-Differential |
| 45 | 104-1645 | 1 | Pin |
| 46 | 104-1646 | 1 | Bearing-Ball |
| 47 | 104-1647 | 1 | Bearing-Needle |
| 48 | 104-1648 | 1 | Gear |
| 49 | 104-1649 | 6 | Bolt |
| 50 | 104-1650 | 1 | Shaft-Axle, LH |
| 51 | 104-1651 | 1 | Shaft-Axle, RH |
| 52 | 104-1652 | 4 | Bearing-Ball |
| 53 | 104-1653 | 1 | Case-Axle, LH |
| 54 | 104-1654 | 1 | Case-Axle, RH |
| 55 | 104-1655 | 4 | Ring-Snap |
| 56 | 104-1656 | 2 | Nut-Castle |
| 57 | 104-1657 | 2 | Ring-Snap |
| 58 | 104-6870 | 1 | Shaft-Shift, Complete |
| 59 | 104-1659 | 2 | Knock-Pipe |
| 60 | 104-1660 | 1 | Ball-Steel |
| 61 | 104-1661 | 1 | Spring |
| 62 | 104-1662 | 1 | Gasket |
| 63 | 104-1663 | 1 | Bolt |
| 64 | 104-1664 | 1 | Gasket |
| 65 | 104-1665 | 6 | Bolt-Flange |
| 66 | 104-1666 | 4 | Bolt-Flange |
| 69 | 104-6867 | 2 | Collar |
| 70 | 33004-00 | 10 | Nut-HF |
| 71 | 104-1671 | 2 | Bracket-Axle |
| 72 | 104-1672 | 1 | Nut-Lock |
| 73 | 104-1673 | 2 | Washer-Spring |
| 74 | 104-1674 | 2 | Washer |
| 75 | 104-1675 | 2 | Hub |
| 76 | 104-6860 | 1 | Lever-Select |
| 78 | 104-8649 | 10 | Stud |
| 80 | 121-9718 | 1 | Cap-Seal |

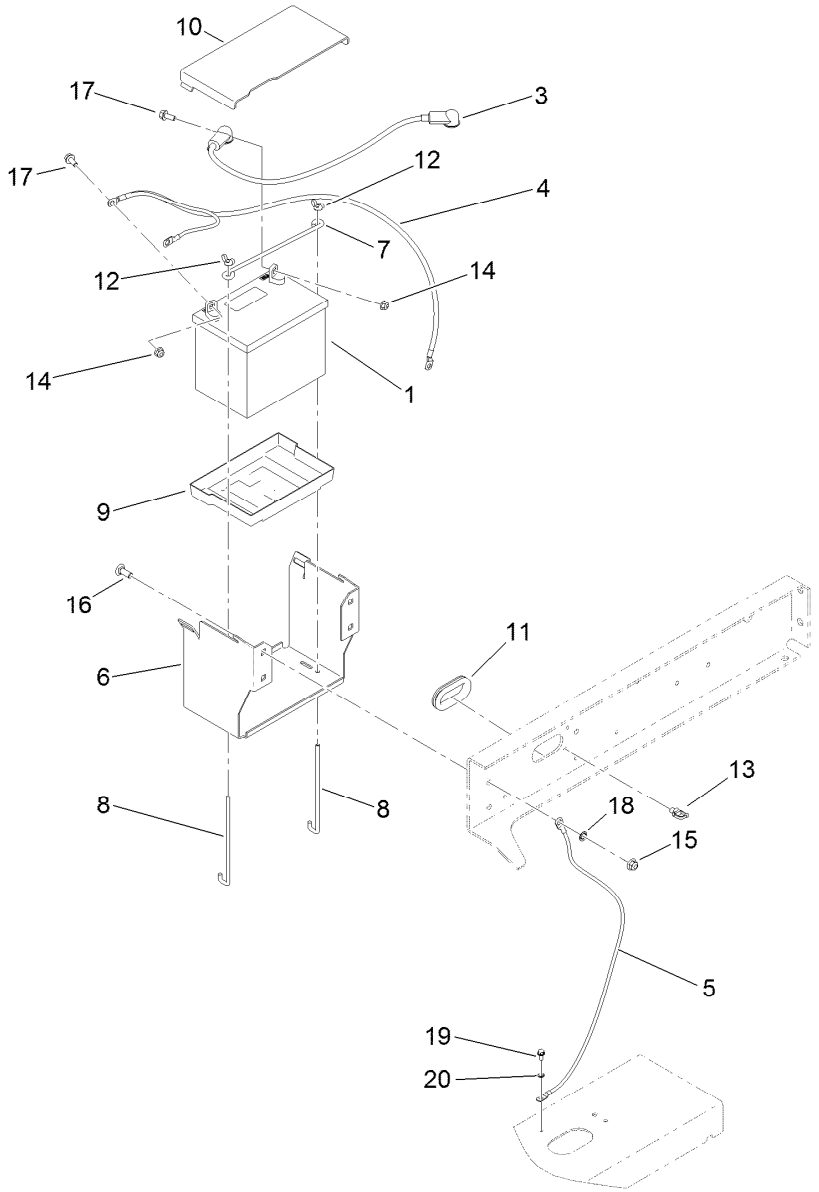


# Battery Assembly

| Ref. | Part Number | Qty. | Description |
|---|---|---|---|
| 1 | 104-8162 | 1 | Battery, 300CCA W/O Electrolyte |
| 3 | 114-9404 | 1 | Cable-Battery, Positive |
| 4 | 115-8107 | 1 | Cable-Battery, Negative |
| 5 | 115-8108 | 1 | Cable-Battery, Negative |
| 6 | 115-2302-03 | 1 | Base-Battery |
| 7 | 100-6434 | 1 | Rod-Hold Down, Battery |
| 8 | 100-6435 | 2 | Post-Battery |
| 9 | 106948 | 1 | Tray-Battery |
| 10 | 115-2394 | 1 | Cover-Battery |

| Ref. | Part Number | Qty. | Description |
|---|---|---|---|
| 11 | 240-12 | 1 | Grommet-Rubber |
| 12 | 32103-22 | 2 | Nut-Wing |
| 13 | 32180-030 | 2 | Clip-Tie |
| 14 | 104-8300 | 2 | Nut-HF, NI |
| 15 | 104-8301 | 4 | Nut-HF, NI |
| 16 | 3231-22 | 4 | Screw-CARR |
| 17 | 3234-5 | 2 | Screw-HHF |
| 18 | 3254-6 | 1 | Washer-Lock, Internal |
| 19 | 32144-4 | 1 | Screw-HWH |
| 20 | 3254-16 | 1 | Washer-Lock/Int |

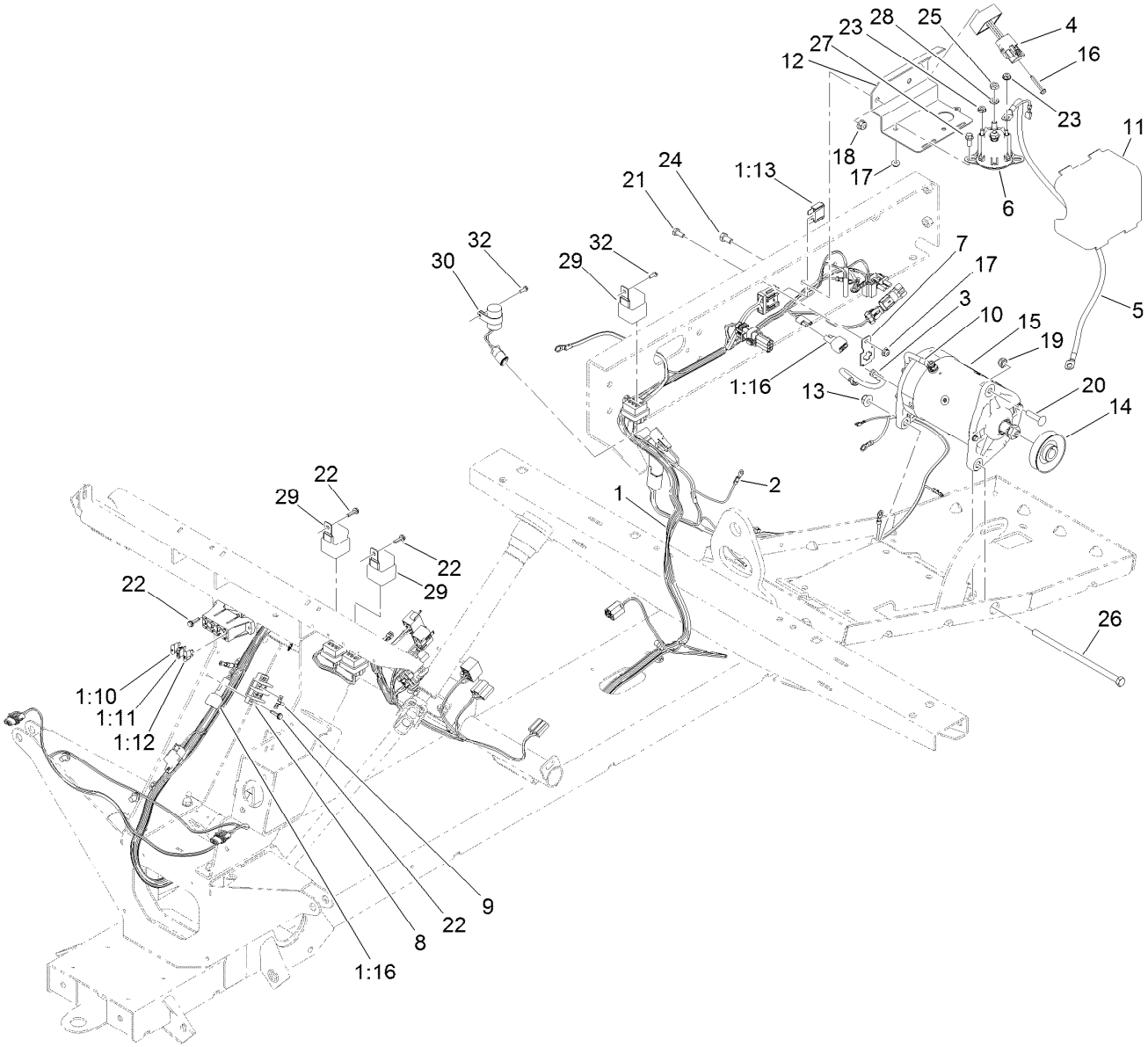


# Electrical Assembly

| Ref. | Part Number | Qty. | Description |
|---|---|---|---|
| 1 | 122-1429 | 1 | Harness-Wire, Main |
| 1:10 | 218-578 | 1 | Fuse-Blade, 10 Amp |
| 1:11 | 109355 | 1 | Fuse-Blade, 15 Amp |
| 1:12 | 109101 | 1 | Fuse-Blade, 20 Amp |
| 1:13 | 114-3342 | 1 | Fuse-Maxi, 60 Amp |
| 1:16 | 100-4918 | 2 | Diode |
| 2 | 122-1140 | 1 | Harness-Wire, Engine |
| 3 | 94-2777 | 1 | Wire-Ground |
| 4 | 119-9492 | 1 | Regulator-Voltage |
| 5 | 112-3537 | 1 | Cable-Battery, Positive |
| 6 | 114-3315 | 1 | Solenoid |
| 7 | 114-5502 | 1 | Clip-Fuse |
| 8 | 42862 | 1 | Block-Terminal, Ground |
| 9 | 42863 | 1 | Strip-Jumper |
| 10 | 122-1176 | 1 | Cable-Battery, Negative |
| 11 | 112-3027 | 1 | Cover-Controller |
| 12 | 119-0752-03 | 1 | Mount-Component |
| 13 | 104-8301 | 1 | Nut-HF, NI |

| Ref. | Part Number | Qty. | Description |
|---|---|---|---|
| 14 | 121-6277 | 1 | Pulley-Drive |
| 15 | 131-8444 | 1 | Starter/Generator ASM |
| 16 | 100-4352 | 1 | Screw-HWH |
| 17 | 104-7201 | 3 | Nut-HF |
| 18 | 104-8300 | 2 | Nut-HF, NI |
| 19 | 3296-69 | 1 | Nut-Lock, NI |
| 20 | 112-6950 | 1 | Screw-CARR |
| 21 | 321-3 | 1 | Screw-HH |
| 22 | 100-4351 | 6 | Screw-HWH |
| 23 | 32149-8 | 2 | Nut-Keps |
| 24 | 322-4 | 2 | Screw-HH |
| 25 | 3220-2 | 2 | Nut-Jam |
| 26 | 323-30 | 1 | Screw-HH |
| 27 | 3234-33 | 2 | Screw-HHF |
| 28 | 3255-8 | 2 | Washer-Lock |
| 29 | 99-7430 | 3 | Relay-Mini |
| 30 | 122-1128 | 1 | Module-Delay, Timer |
| 32 | 32144-87 | 2 | Screw-HWHTF |

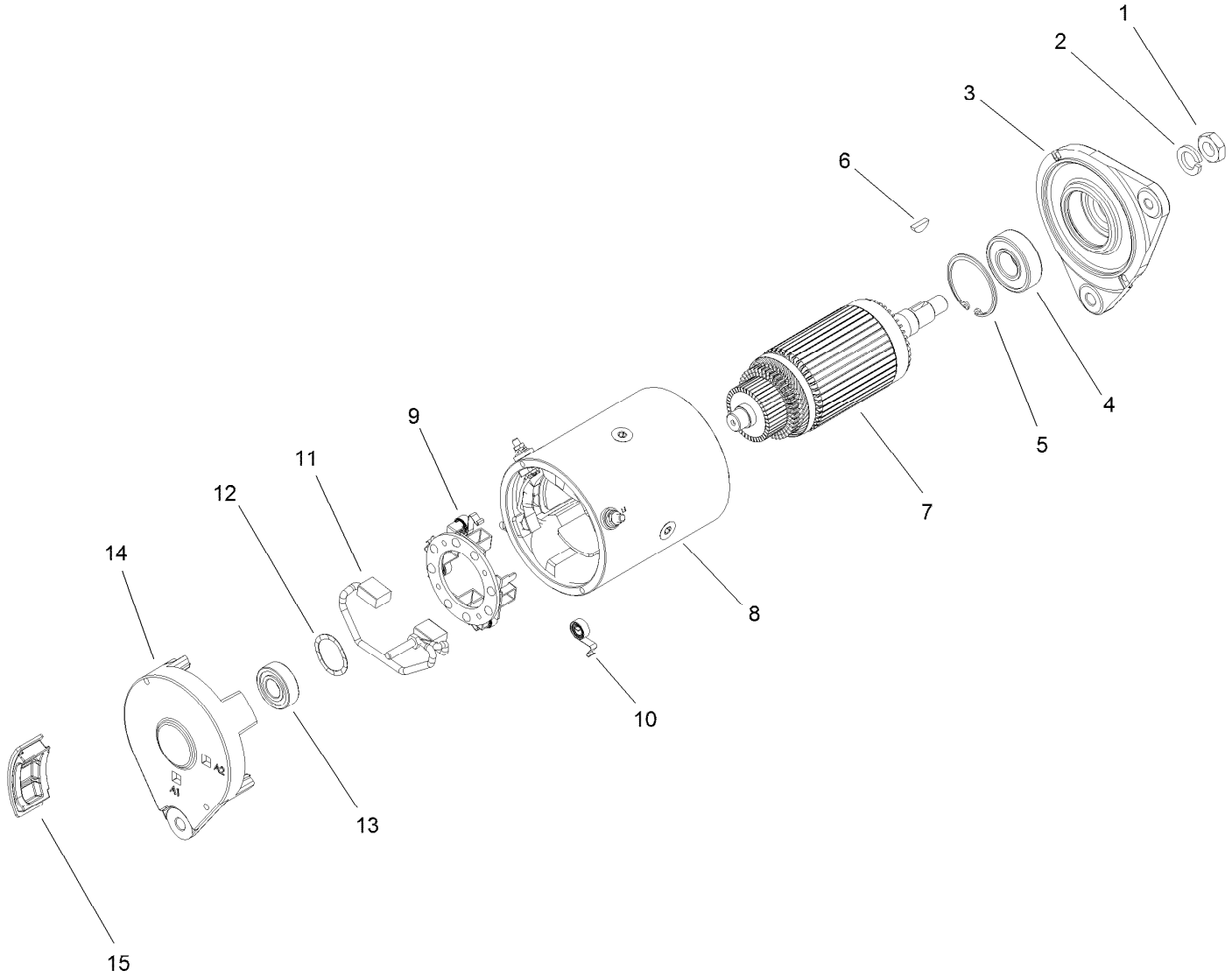


# Starter Generator Assembly No. 131-8444

| Ref. | Part Number | Qty. | Description |
|---|---|---|---|
| 1 | 119-9651 | 1 | Nut |
| 2 | 119-9652 | 1 | Washer-Lock |
| 3 | 133-0599 | 1 | Head-Drive End |
| 4 | 119-9655 | 1 | Bearing |
| 5 | 119-9656 | 1 | Ring-Retaining |
| 6 | 119-9657 | 1 | Key-Woodruff |
| 7 | 119-9658 | 1 | Armature ASM |
| 8 | | 1 | Frame And Field Assembly ● |
| 9 | 119-9661 | 1 | Brush Box ASM |
| 10 | 119-9660 | 4 | Spring-Brush |
| 11 | 119-9659 | 1 | Brush Lead And Terminal Service Kit |
| 12 | 119-9662 | 1 | Washer-Wave |
| 13 | 119-9663 | 1 | Bearing |
| 14 | | 1 | Head-End, Cummutator ● |
| 15 | 133-0600 | 4 | Plug-Rubber |

● Not serviced separately

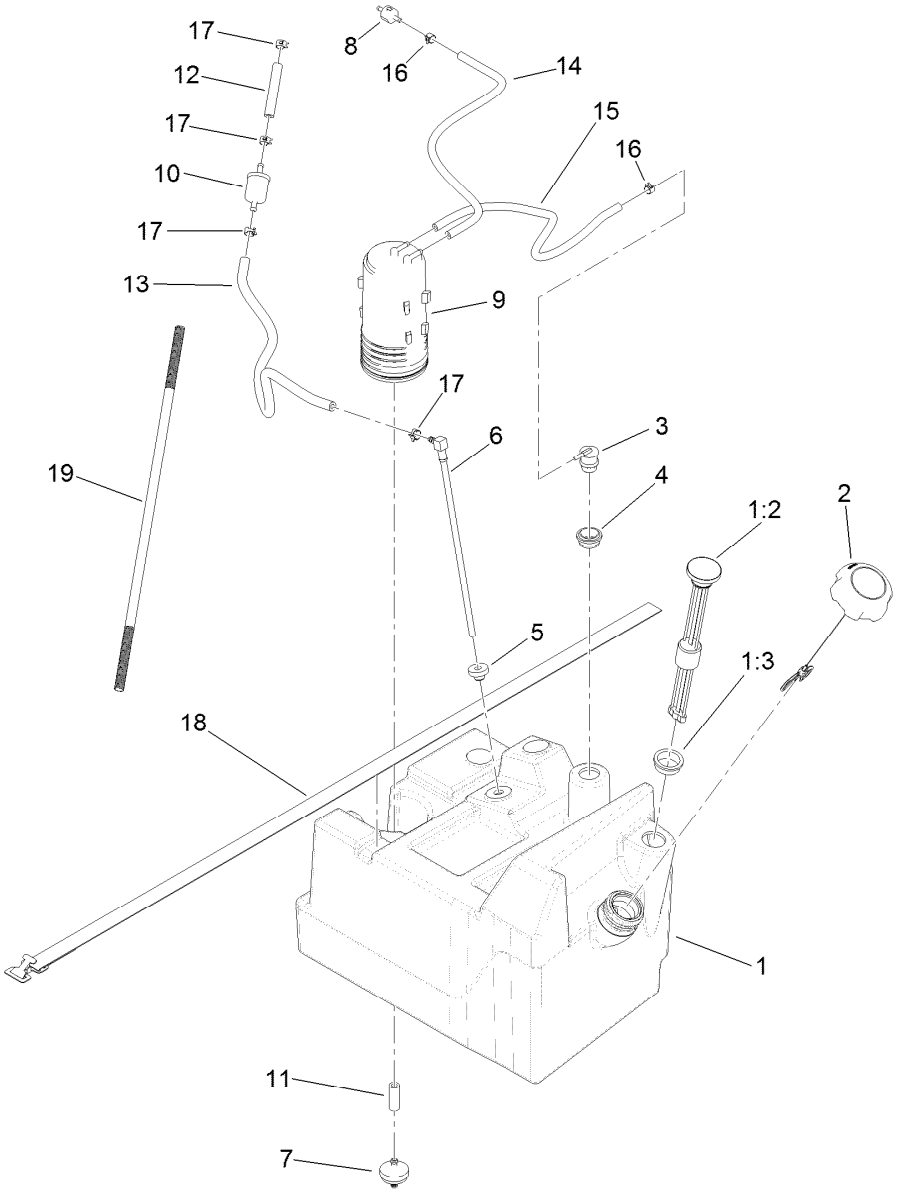


# Fuel Tank Assembly

| Ref. | Part Number | Qty. | Description |
|---|---|---|---|
| 1 | 121-9769 | 1 | Fuel Tank ASM |
| 1:2 | 99-7262 | 1 | Gauge-Fuel |
| 1:3 | 95-8972 | 1 | Grommet |
| 2 | 137-4127 | 1 | Cap-Fuel |
| 3 | 114-0285 | 1 | Valve-Rollover |
| 4 | 114-0284 | 1 | Grommet |
| 5 | 46-6560 | 1 | Bushing |
| 6 | 99-7264 | 1 | Pipe-Stand |
| 7 | 115-7854 | 1 | Filter-Fuel, Inline |
| 8 | 133-8499 | 1 | Valve-Check, Vacuum |
| 9 | 117-1221 | 1 | Canister-Carbon, 800Cc |
| 10 | 94-2690 | 1 | Filter-Fuel |
| 11 | 106-5317 | 1 | Hose-Fuel |
| 12 | 109-0303 | 1 | Hose-Fuel |
| 13 | 110-4103 | 1 | Hose-Fuel |
| 14 | 75-4701 | 1 | Hose-Fuel |
| 15 | 110-8751 | 1 | Hose-Fuel |
| 16 | 2412-146 | 2 | Clamp-Hose |
| 17 | 2412-98 | 4 | Clamp-Hose |
| 18 | 3339-175 | 1 | Strapping-Web |
| 19 | 99-7129 | 1 | Conduit-Line, Fuel |

# Attachments and Accessories

## For 07235TC Workman MDX Utility Vehicle

| Product Name | Model/Part |
|---|---|
| Electric Bed Lift Kit, 2014 and After Workman MD/MDX/MDX-D Utility Vehicle | 07389 |
| Receiver Hitch Kit | 07278 |
| Roll-Over Protection System | 07276 |
| Spark Arrestor Screen | 94-8157 |
| Canopy Kit | 07324 |
| Folding Windshield Kit | 07326 |
| Solid Windshield Kit | 07325 |
| Cab Kit | 07320 |
| Work Light Kit | 130-5485 |
| Beacon Kit | 130-5484 |
| Exterior Mirror Kit | 130-5448 |
| Interior Mirror Kit | 130-5449 |
| Door Kit with Sliding Window | 07356 |
| Windshield Washer Fluid Kit, 2015 and after Workman MD/HD Series Utility Vehicle | 130-5615 |
| Lift Wire Harness Kit | 115-7823 |
| Backup Alarm Kit | 115-7824 |
| Tire-AT 489, 24x10.5-10 | 104-7061 |
| Tire-AT 489, 22x9.5-10 | 104-7062 |
| Battery Kit | 119-9680 |
| Stake Pocket Adapter Kit, 2011 and After Workman MD Series Utility Vehicle | 119-9604 |
| Tie-Down Kit, 2011 and After Workman MD Series Utility Vehicle | 119-9605 |
| Hitch ASM | 131-3462 |
| Road Light and Homologation Kit | 120-5031 |
| Brake and Signal Light Kit | 120-5044 |
| Cargo Bed Installation Kit with Manual Dump, 2011 to 2013 Workman MD Series Utility Vehicle | 127-7385 |
| Cargo Bed Installation Kit with Electric Lift, 2011 to 2013 Workman MD Series Utility Vehicle | 127-7386 |
| Horn Kit | 115-7825 |
| Key Start Kit | 121-6338 |
| LED Worklight Kit | 133-0554 |
| ROPS Beacon Kit | 133-0609 |
| Front Spring Kit, 2016 and After MDX or MDX-D Series Utility Vehicle | 133-0630 |
| Spanner Wrench | 132-5069 |
| Brush Guard Kit | 07145 |
| Side Mirror Kit | 119-9546 |
| Service Hood ASM | 133-7209 |
| Wireless Hour Meter Finish Kit | 138-5698 |
| Door Mount Mirror Kit | 136-1997 |
| Hose Reel Mounting Kit | 07027 |
| Trash Can Mounting Kit | 07028 |
| Walk Spreader Mounting Kit | 07029 |
| Front Hitch Kit, Workman GTX Series Utility Vehicles with Brush Guard | 07146 |
| Front Hitch Kit, Workman GTX or MDX Series Utility Vehicles without Brush Guard | 07147 |
| Shim-Limiter | 119-0807 |
| Small Seat Cover | 131-6690 |

# Attachments and Accessories (continued)

Tire (22 X 9.50-10) 4-PLY ..... 127-7435
Tire (24 X 12.00-10) 4P K506 ..... 131-6667
Aggressive Tire Kit, Workman MDX Series Utility Vehicle ..... 136-1135
MVP Filter Kit, Mid-Duty Workman Utility Vehicle ..... 30004
External Antenna Kit, Wireless Hourmeter System ..... 115-9524
Base Station Kit, Wireless Hourmeter System ..... 115-9542
Wireless Hourmeter ..... 115-4754
Repeater Kit, Wireless Hourmeter System ..... 115-9543

TORO®

Count on it.