FORM NO. 3324-956

TORO®

Rear Roller Scraper Kit

For Reelmaster ® 5000 Series Cutting Unit

Part No. 104-3395

Installation Instructions

1. Place mower on a level surface.
2. Remove capscrew and flange nut securing each end of rear roller to roller brackets. Discard capscrews and flange nuts.
3. Mount appropriate scraper bracket (R.H. or L.H.) to each roller bracket with new capscrew and flange nut. Position brackets as shown in figure. Make sure roller is secure and centered in roller brackets.
4. Thread a flange locknut onto each end of scraper rod as shown in figure.
5. Insert scraper rod into scraper brackets and loosely secure with locknuts as shown in figure.
6. Adjust locknuts to attain .030"-.060" clearance between scraper bar and roller. Distance between bottom of bar and level surface should be slightly higher than height-of-cut.
7. Assure scraper bar is parallel to roller and level surface.

Note: When scraper is properly installed, bottom of bar should just brush the turf.

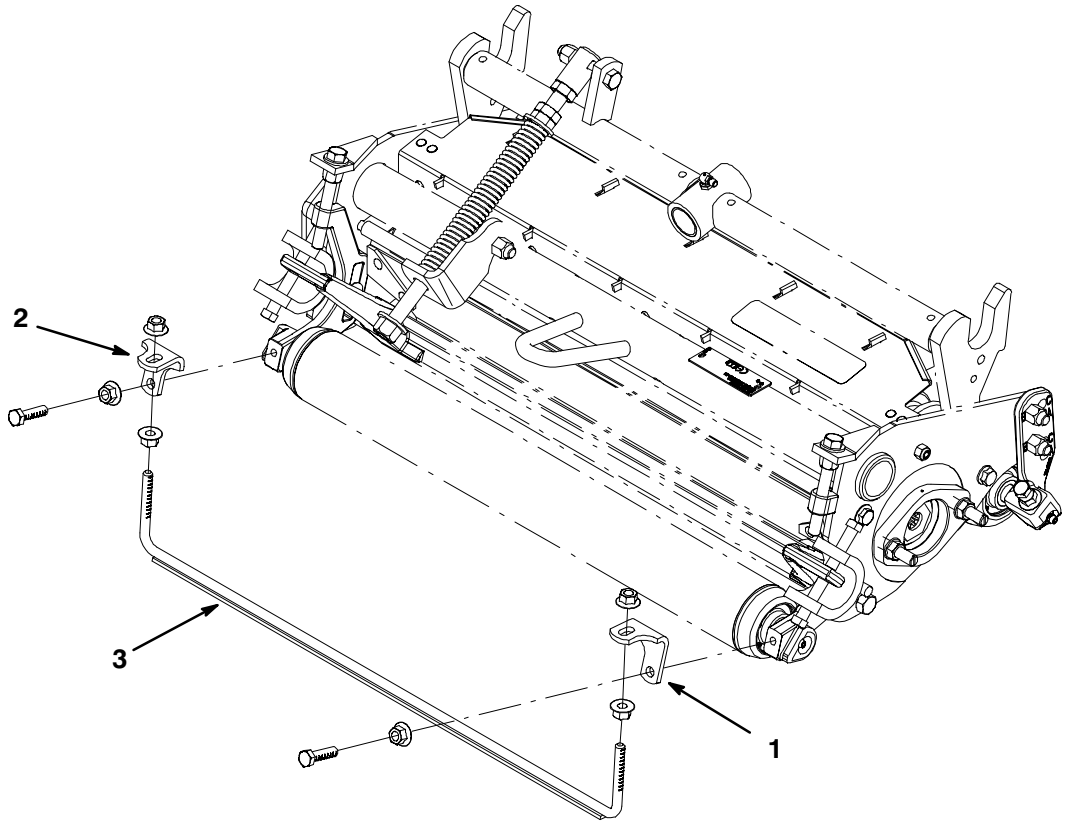

Figure 1

1. Scraper bracket (R.H.)
2. Scraper bracket (L.H.)
3. Scraper rod

©The Toro Company - 2000
All Rights Reserved