FORM NO. 3324–958

TORO®

PART NO. 100–9945

INSTALLATION INSTRUCTIONS

BASKET TIPPER KIT

REELMASTER© 5500

NOTE: Install Basket Kit, Model 03882, onto cutting units before installing Basket Tipper Kit.

1. Park the traction unit on a level surface, lower the cutting units to the ground and engage the parking brake.

2. Turn engine off and remove the key.

3. Remove snap rings and cylinder pin securing lift cylinder to left front lift arm (Fig.1). Retain snap rings for installation of new components.

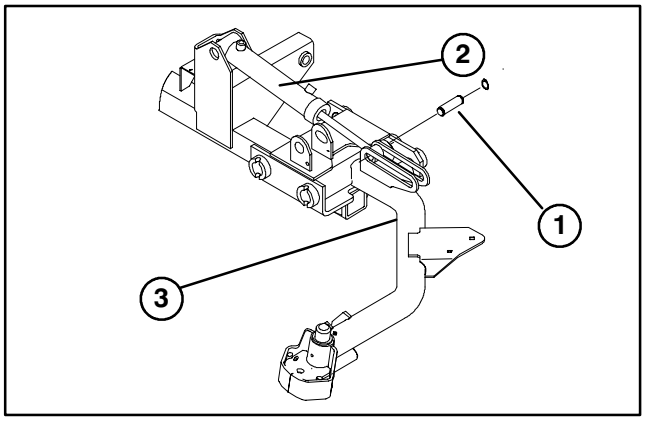

Figure 1
1. Cylinder pin
2. Lift cylinder
3. Lift arm

4. Install cylinder stop and lift cylinder to lift arm with new cylinder pin, (2) thrust washers and previously removed snap rings. Position a washer between each side of cylinder stop and lift arm slides. Make sure stop is positioned as shown in figure 2.

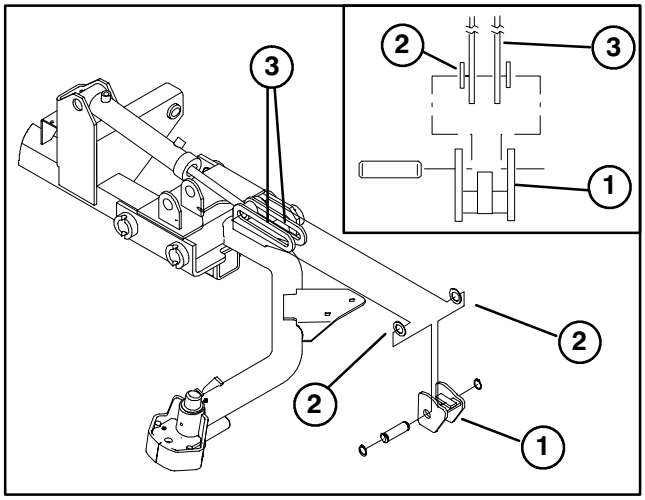

Figure 2
1. Cylinder stop
2. Thrust washers (2)
3. Lift arm slides

5. Repeat procedure on right front lift arm.

6. Disconnect hose and fitting from front of reel motor on front center cutting unit.

7. Install new 45° fitting to reel motor. Orientate fitting as shown in figure 3, insert. Fitting to be orientated so hoses do not contact basket bracket

NOTE: Make sure O–rings are in position when connecting fittings.

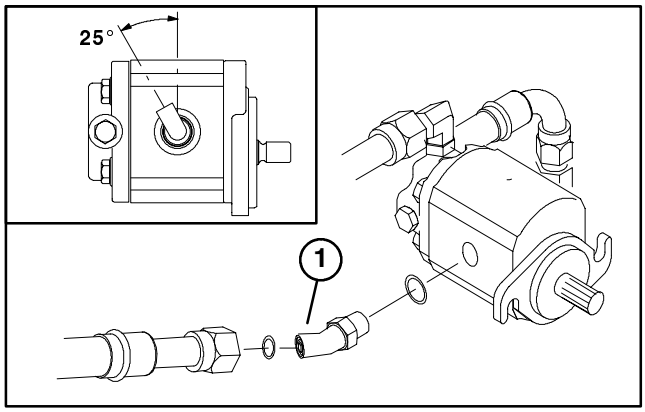

Figure 3
1. Front reel motor fitting

<u>Steps 8 thru 14 apply to 2 wheel drive machines only</u>

8. Remove capscrew and washers securing hose clamp to left side of machine (Fig. 4). Support hoses so they do not drop. Retain clamp for installation of new components.

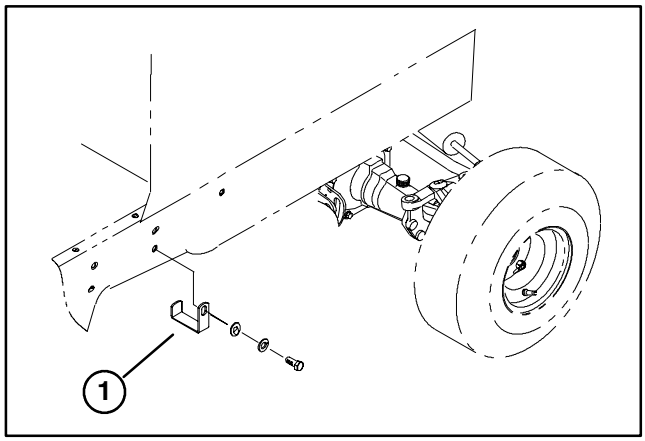

Figure 4
1. Hose clamp

© The TORO Company – 2000

9. Loosely mount a spacer, front of L.H. tipper bracket and a hose clamp to left side of traction unit frame with **(**2**)** 1/2−13 x 1.50" lg. capscrews and flat washers (Fig. 5).

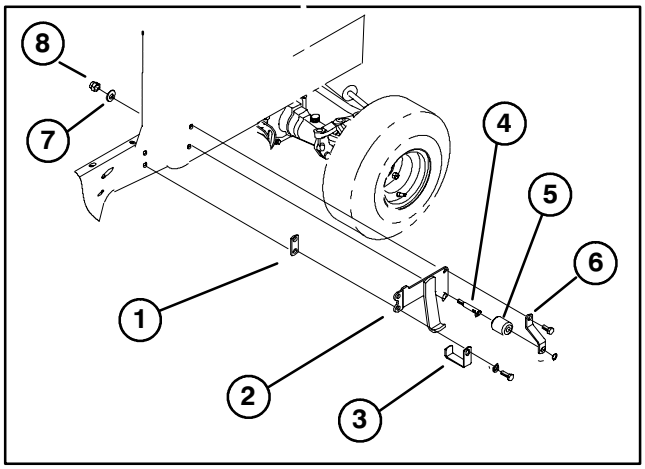

Figure 5

1. Spacer
2. L.H. Tipper bracket
3. Hose clamp
4. Roller pin
5. Reel roller
6. Roller bracket
7. Flatwasher
8. Locknut

10. Using bottom right hole, mount roller pin and L.H. tipper bracket to frame with flat washer and lock nut (Fig. 5).

11. Insert reel roller and roller bracket end onto roller pin. Secure with snap ring (Fig. 5).

12. Using top hole, loosely mount roller bracket and L.H. tipper bracket to frame with a 1/2−13 x 1.50" lg. capscrew (Fig. 5).

13. Tighten all fasteners**.**

14. Repeat procedure on right side of machine.

Steps 15 thru 19 apply to 4 wheel drive machines only

15. Remove capscrews and washers securing hose clamp and rear of ROPS to left side of machine (Fig. 6). Support ROPS with a hoist or equivalent so it does not tip or fall. Also, support hoses so they do not drop. Retain clamp for installation of components.

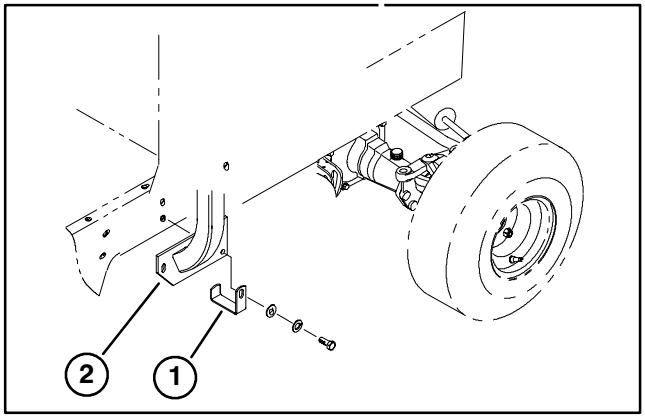

Figure 6

1. Hose clamp
2. ROPS

16. Loosely mount the rear of ROPS, front of L.H. tipper bracket and the hose clamp to left side of traction unit frame with **(**2**)** 1/2−13 x 1.50" lg. capscrews and flat washers (Fig. 7).

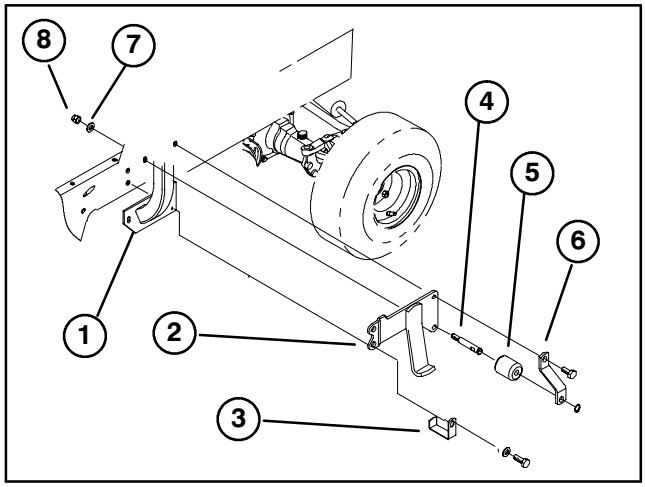

Figure 7

1. ROPS
2. L.H. Tipper bracket
3. Hose clamp
4. Roller pin
5. Reel roller
6. Roller bracket
7. Washer
8. Locknut

17. Using bottom right hole, mount roller pin and tipper bracket to frame with flat washer and lock nut (Fig. 7).

18. Insert reel roller and roller bracket end onto roller pin. Secure with snap ring (Fig. 7).

19. Using top hole, loosely mount roller bracket and tipper bracket to frame with capscrew (Fig. 7).

20. Tighten all fasteners**.**

21. Repeat procedure on right side of machine.

2 and 4 wheel drive machine

22. Mount a lift chain to each pivot rod with a flat washer and lock nut (Fig. 8).

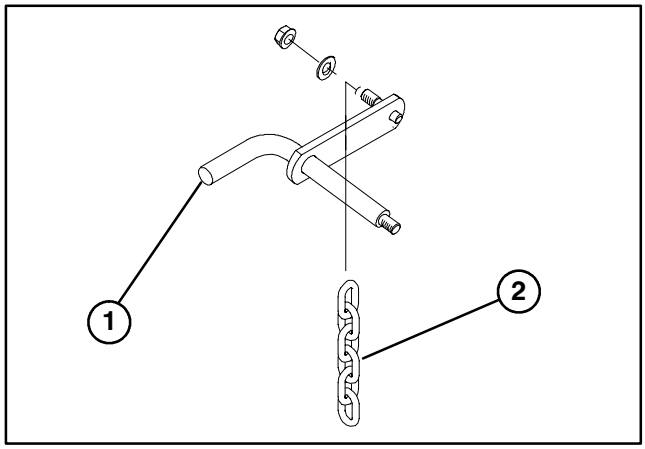

Figure 8

1. Pivot rod
2 Lift chain

23. Mount a bushing to each hole in both rear lift arms (Fig. 9).

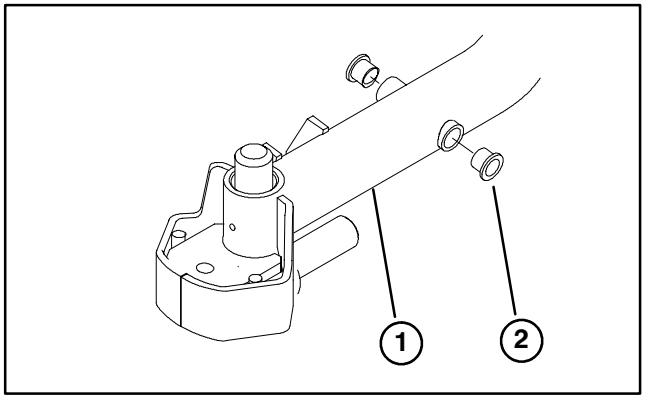

Figure 9
1. Rear lift arm
2. Bushing

24. Slide appropriate spring (R.H. or L.H.) onto each pivot rod and chain assembly (Fig. 10). Small loop end of spring hooks over pivot rod plate.

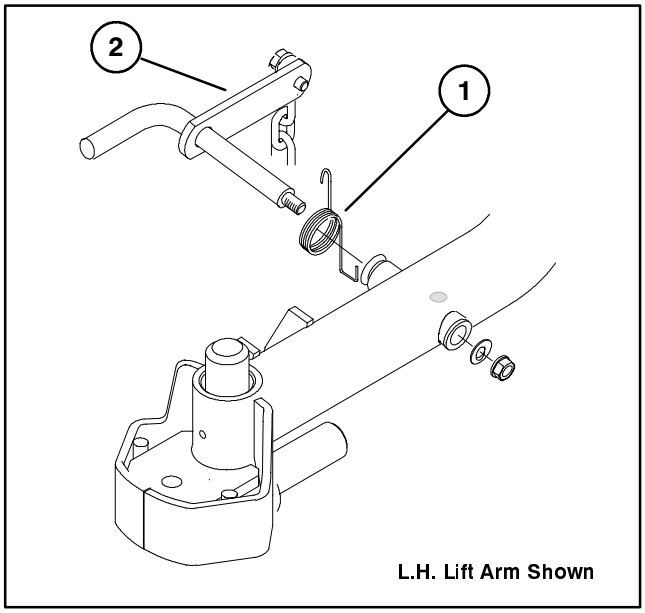

Figure 10
1. L.H. Spring
2. Pivot rod plate

25. Loosely mount pivot rod/chain assembly and spring to each rear lift arm with a flat washer and lock nut (Fig. 10). Large loop end of spring hooks into hole in bottom of lift arm. Tighten nut.

Note: The spring forces pivot rod arm upward to take up slack in chain.

26. Mount left lift chain to cutting unit bracket with a capscrew flat washer and lock nut (Fig. 11).

27. On back right cutting unit, turf compensation spring assembly (Fig. 11) must be removed and installed on right side of cutting unit before lift chain can be mounted.

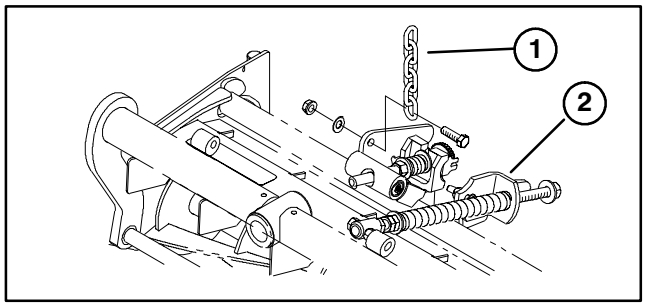

Figure 11
1. Lift chain
2. Turf compensation spring assembly

28. Disconnect hoses from each rear cutting unit motor.

29. Slide a protective sleeve over hoses and secure with (2) cable ties (Fig. 12).

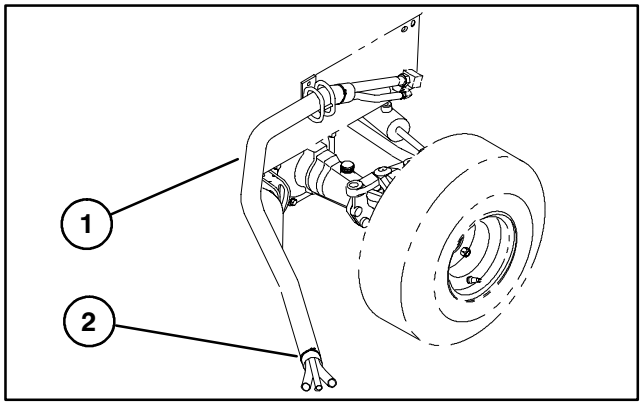

Figure 12
1. Protective sleeve
2. Cable tie

30. Connect hoses to each rear cutting unit motor.

31. Disconnect hose from rear of hydrostat (next to filter) (Fig.13).

32. Slide a protective sleeve over hose and secure with (2) cable ties.

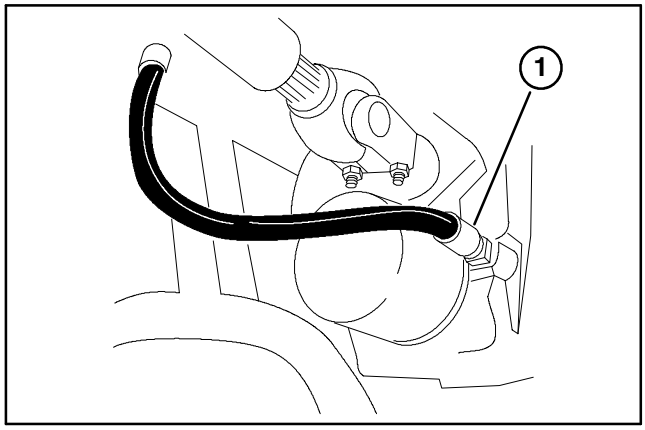

Figure 13
1. Hydraulic hose

33. Connect hose to hydrostat. Before tightening hose fitting to hydrostat, make sure it is positioned for optimum clearance above basket.

34. Check hydraulic fluid levels and replentish as required.


TORO®