Form No. 3324–984

Z253

Z–Master® with 62” Side Discharge Mower

Model No. 74225—210000001 and Up

Parts Catalog

Ordering Replacement Parts

To order replacement parts, please supply: the part number, the quantity, and the description of each part desired.

Understanding Reference Numbers

Each identified part in an illustration has a reference number. The reference number for a part also appears in the parts list, along with other information about the part.

This catalog uses two special reference number formats, one to indicate parts in a service assembly and another to indicate the quantity of a given part in an illustration.

Service Assembly Reference Numbers

Parts in service assemblies have reference numbers in the form **a:b.** The **a** represents the reference number of the entire service assembly and the **b** represents a sequential number unique to each part within the service assembly.

For example, a wheel assembly might be identified by reference number **6**, the tire by **6:1**, the valve by **6:2**, and the wheel by **6:3**. When you order the assembly identified by reference number 6, you receive all parts identified by reference numbers 6:1, 6:2, and 6:3. However, you may also order any part individually.

Reference numbers of this type appear in illustrations and in part lists.

Reference Numbers Indicating Quantity

In an illustration, if a reference number indicates more than one part, the reference number has the form **nX y.** The **n** represents the quantity of the part, the **X** is the multiplication symbol, and the **y** represents the reference number.

For example, in an illustration, the reference number **2X 37** means that two of the parts identified by reference number 37 are indicated.

© The TORO Company — 2000
All Rights Reserved

Contents

Description	Page
Front Frame Assembly	3
Caster and Wheel Assembly	4
Rear Frame and Wheel Assembly	5
Brake and Wheel Hub Assembly	6
Control Panel Assembly	7
Hydraulic System Assembly	8
Tank and Fuel Lines Assembly	10
Shields and Clutch Assembly	11
Idler Assembly	13
Electrical System Assembly	14
Frame and Deck Assembly	15
Deck, Deflector and Roller Assembly	16
Spindle and Pulley Assembly	17
Belts and Idler Arm Assembly	18
Stand Assembly	19
Group 1 – Crankshaft (CH22S PS–76513 Kohler)	20
Group 2 – Crankcase (CH22S PS–76513 Kohler)	21
Group 3 – Oil Pan/Lubrication (CH22S PS–76513 Kohler)	22
Group 4 – Head/Valve/Breather (CH22S PS–76513 Kohler)	23
Group 5 – Ignition/Electrical (CH22S PS–76513 Kohler)	24
Group 6 – Blower Housing & Baffles (CH22S PS–76513 Kohler)	25
Group 7 – Starting System (CH22S PS–76513 Kohler)	26
Group 8 – Fuel System (CH22S PS–76513 Kohler)	27
Group 9 – Engine Controls (CH22S PS–76513 Kohler)	28
Group 10 – Air Intake/Filtration (CH22S PS–76513 Kohler)	29
Group 11 – Exhaust (CH22S PS–76513 Kohler)	30

Accessories

Description	Model / Part No.
Deck Lift Assist Kit	78473
Roll–Over Protection System	78480
Hitch Kit	99–8925
Atomic Blade Assembly	104–1303
62”/72” Stripping Kit	30163

Part Description Abbreviations

Part descriptions in this catalog may include the following abbreviations.

Abbreviation	Meaning
AR	as required
ASM	assembly
CARR	carriage
DEG	degrees
FH	flat head
GA	gauge
HF	hex flange
HH	hex head
HHF	hex head flange
HLH	hex lag head
HJ	hex jam
HOC	height-of-cut
HS	hex socket
HSBH	hex socket button head
HSFH	hex socket flat head
HSH	hex socket head
HWH	hex washer head
HWHTF	hex washer head thread forming
INC	incorporated
LH	left hand
NI	nylon insert
PPH	Phillips pan head
PTH	Phillips truss head
PTO	power take off
RH	right hand
SFH	slotted fillister head
SHH	slotted hex head
SQH	square head
SHWH	slotted hex washer head
SPH	slotted pan head
SRH	slotted round head
STD	standard
TAP	self tapping
TTH	Torx truss head
WH	wing head

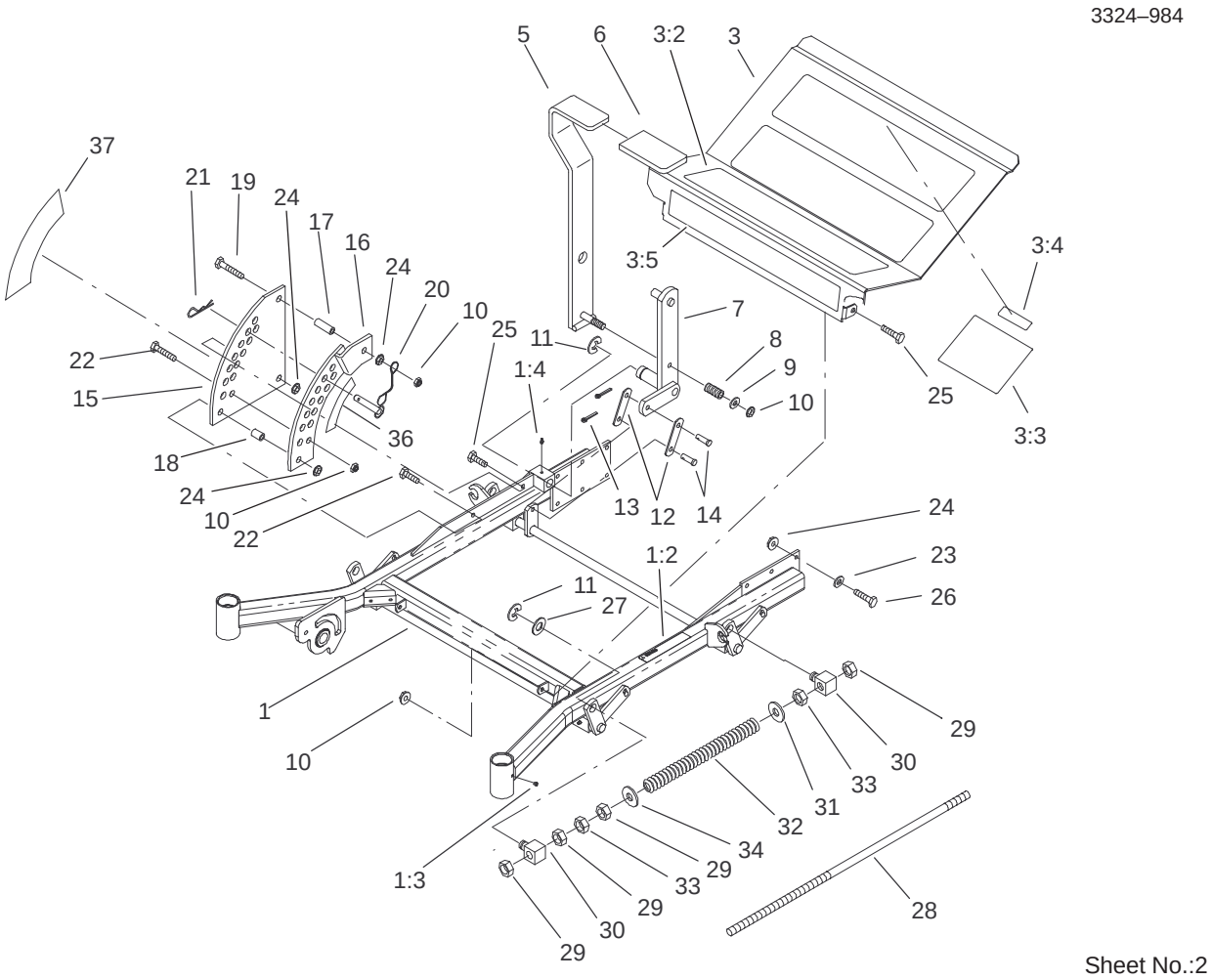

Sheet No.:2

Front Frame Assembly

Ref. No.	Part No.	Qty.	Description
1	104–5132	1	Frame ASM
1:2	1–633818	1	Decal–Warning
1:3	1–811010	2	Plug
1:4	302–19	5	Fitting–Grease
3	100–6509	1	Floorpan ASM
3:2	1–633553	3	Pad–Antiskid
3:3	1–633766	1	Decal–Check
3:4	98–5954	1	Decal–Missing, Cover
3:5	1–633737	1	Decal–Z–Master
5	1–632324–03	1	Lever–Lift
6	1–633295	1	Grip–Lever, Lift
7	1–632219–03	1	Arm–Lift, Deck
8	1–633325	1	Spring–Compression
9	3256–24	1	Washer–Flat
10	3296–39	5	Nut–Lock, NI
11	32151–103	5	Ring–Snap
12	1–633068	2	Arm–Lift, Deck
13	3272–10	2	Pin–Cotter
14	283–2	2	Pin–Clevis
15	1–633889–01	1	Plate–Lift, Deck
16	1–632899–01	1	Plate–Lift, Deck
17	1–633082	1	Bushing–Lever, Lift
18	1–633080	1	Bushing–Lever, Lift
19	323–13	1	Screw–HH
20	1–633097	1	Pin–Hitch w/Lanyard
21	1–806005	1	Pin–Hair

Ref. No.	Part No.	Qty.	Description
22	323–9	2	Screw–HH
23	98–5975	12	Washer–Belleville
24	3290–357	15	Nut–Flange, Lock
25	323–6	3	Screw–HH
26	323–7	12	Screw–HH
27	3256–29	4	Washer–Flat
28	1–633096	2	Rod–Lift, Deck
29	3217–11	8	Nut–Hex
30	1–633441	4	Swivel–Deck Mount, Rear
31	3256–7	2	Washer–Flat
32	1–633064	2	Spring–Support, Deck
33	3218–6	4	Nut–Jam
34	3256–7	2	Washer–Flat
36	1–633706	1	Decal–Height, Deck
37	1–633345	1	Decal–Height, Deck

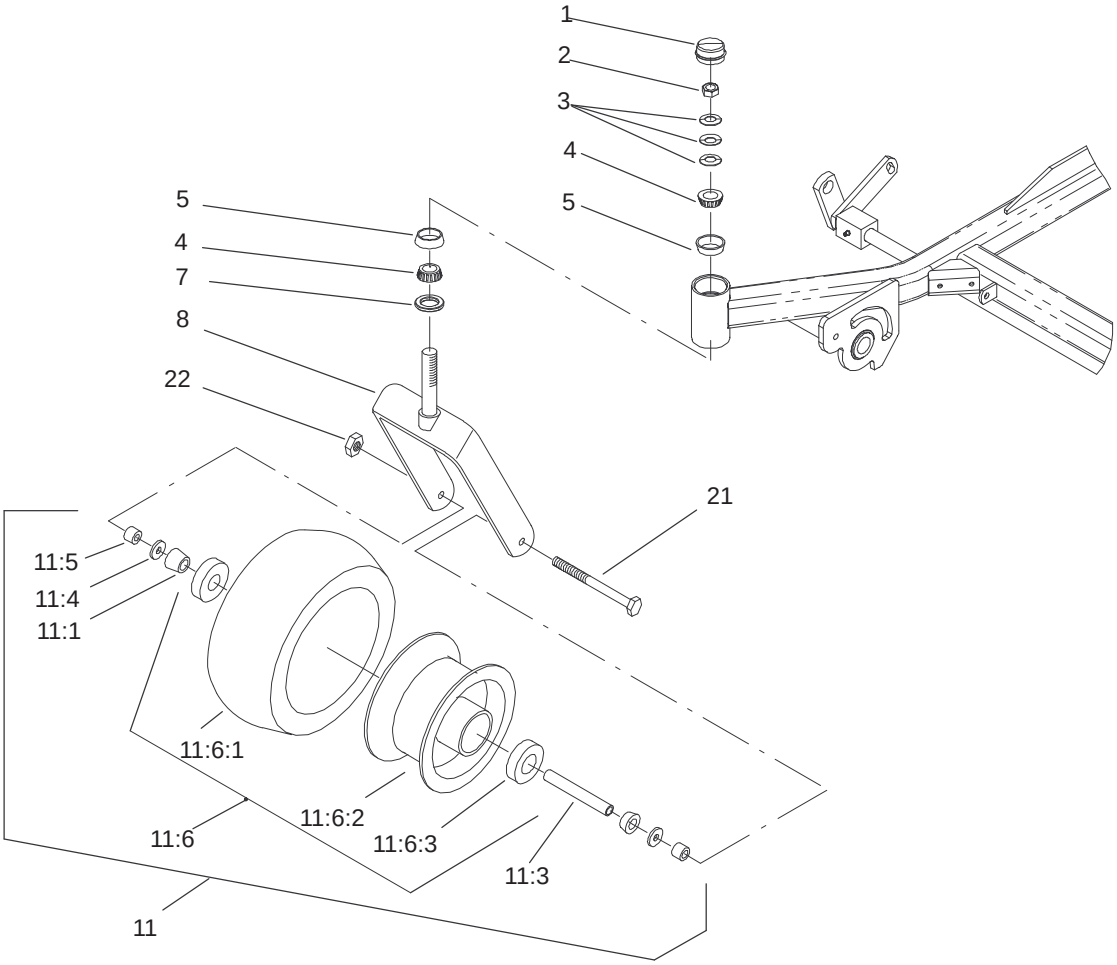

Sheet No.:3

Caster and Wheel Assembly

Ref. No.	Part No.	Qty.	Description
1	1–543513	2	Cap–Grease
2	3296–51	2	Nut–Lock, NI
3	1–633508	6	Washer–Bellville
4	254–94	4	Bearing–Taper/Cone
5	254–72	4	Bearing–Taper/Cup
7	1–543511	2	Seal–Grease
8	1–642111–01	2	Caster
11	1–644251	2	Caster Wheel ASM
11:1	1–633585	2	Bearing–Cone, Tapered
11:3	1–633959	1	Spacer–Caster, Front
11:4	1–633580	2	Seal–Bearing
11:5	1–633581	2	Spacer–Bearing
11:6		1	Wheel & Tire ASM
11:6:1	1–523009	1	Tire
11:6:2	1–633987	1	Wheel
11:6:3	1–633584	2	Bearing–Cup
21	325–24	2	Screw–HH
22	3296–45	2	Nut–Lock, NI

Ref. No.	Part No.	Qty.	Description

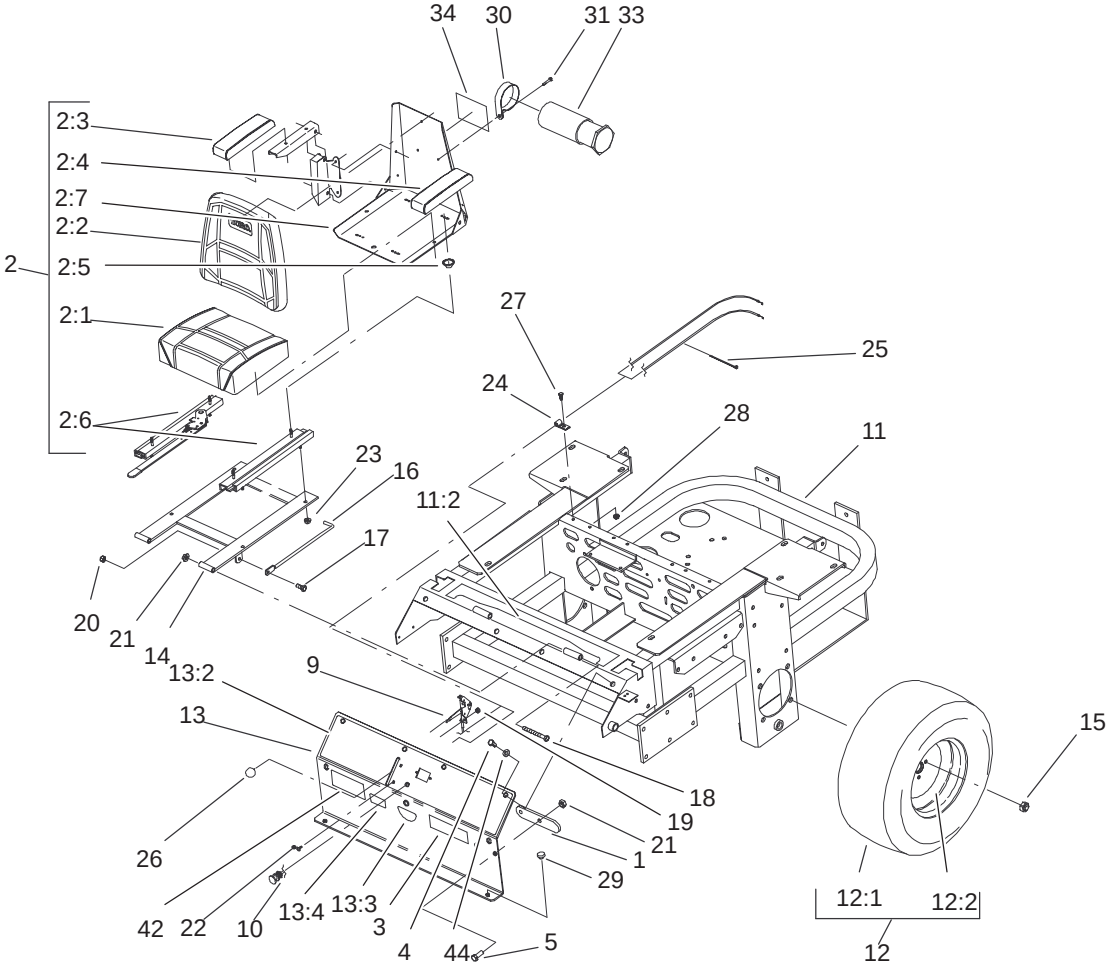

Sheet No.:4

Rear Frame and Wheel Assembly

Ref. No.	Part No.	Qty.	Description
1	1–633964–03	1	Stop–Brake, Park
2	1–633705	1	Seat w/Tracks
2:1	103–0290	1	Cushion–Bottom, Seat
2:2	104–7754	1	Cushion – Back, Seat
2:3	1–633710	1	Cushion–Armrest, RH
2:4	1–633711	1	Cushion–Armrest, LH
2:5	1–543401	4	Spacer–Track
2:6	1–643255	1	Track–Seat, 4”
2:7	1–633859	1	Frame–Seat
4	322–3	6	Screw–HH
5	323–6	2	Screw–HH
9	1–633696	1	Cable–Throttle
10	1–603336	1	Control–Choke
11	100–4261	1	Rear Frame ASM
11:2	103–0245	1	Decal–Console, Top
12	1–633970	2	Wheel & Tire ASM
12:1	1–633993	1	Tire
12:2	1–633992	1	Wheel
13	99–4623	1	Console ASM
13:2	100–4311	1	Decal–Panel, Control
13:3	103–0262	1	Decal–Valve, Fuel
13:4	98–4387	1	Decal–Protection, Ear
14	1–632187–03	1	Frame – Seat
15	242–50	8	Nut – Lug
16	1–633293	1	Rod–Holdup, Seat
17	322–5	1	Screw–HH

Ref. No.	Part No.	Qty.	Description
18	323–21	2	Screw–HH
19	3296–2	2	Nut–Lock
20	3296–29	1	Nut–Lock
21	3296–39	4	Nut–Lock, NI
22	1–807513	2	Bolt–CARR
23	32128–20	4	Nut–HF
24	1–513762	1	Clip–Loom
25	1–303335	1	Tie–Plastic
26	1–513592	1	Knob–Ball, Red
27	321–4	1	Screw–HH
28	32128–33	1	Nut–HF
29	1–513658	2	Bumper–Catcher, Grass
30	2412–120	2	R–Clamp
31	32104–76	2	Screw
33	74–0720	1	Tube–Manual
34	99–4693	1	Decal–Toro
42	99–4628	1	Decal–Z253
44	3256–23	6	Washer–Flat

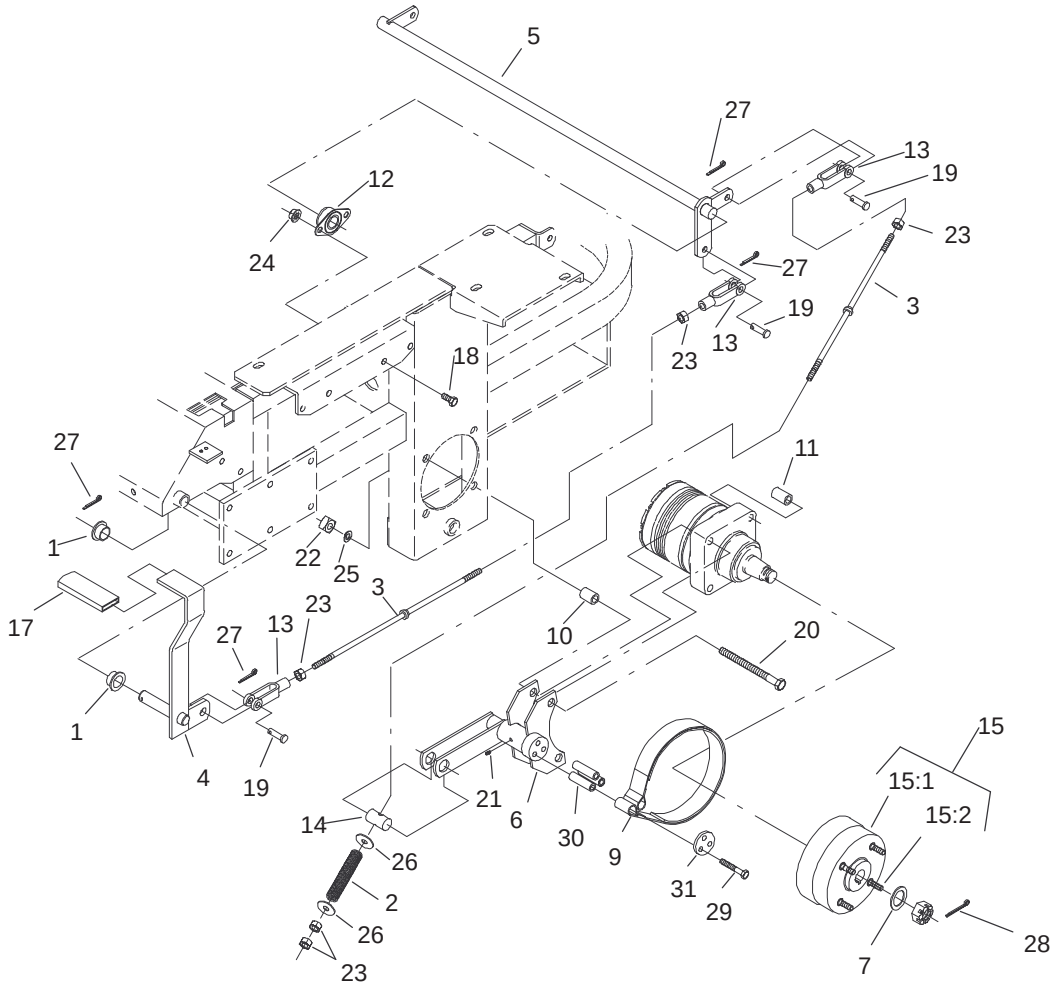

Sheet No.:5

Brake and Wheel Hub Assembly

Ref. No.	Part No.	Qty.	Description
1	1–513140	2	Bearing–Control
2	1–633454	2	Spring–Brake
3	1–633477	3	Rod–Brake
4	1–634500	1	Brake Lever/Grip ASM
5	1–632217–03	1	Shaft–Brake
6	103–0352–03	2	Bracket–Brake
7	1–523157	2	Washer–Spacer
9	103–0355	2	Band–Brake
10	1–633380	4	Spacer–Wheel, Short
11	1–633382	4	Spacer–Wheel, Long
12	1–633102	2	Bearing–Flange, Side
13	1–633131	4	Yoke–Linkage, Brake
14	1–633144	2	Pin–Trunion
15	103–0590	2	Hub–Wheel w/Studs
15:1	103–0589	1	Hub–Wheel
15:2	1–633926	4	Stud–Heel
17	1–633268	1	Grip–Lever, Brake
18	323–4	4	Screw–HH
19	1–808285	4	Pin–Clevis
20	325–17	8	Screw–HH
21	1481	2	Fitting–Grease
22	103–0131	8	Nut–Square
23	3219–3	8	Nut–HH
24	3290–357	4	Nut–Flange, Lock
25	3253–7	8	Washer–Lock
26	3256–4	4	Washer–Flat

Ref. No.	Part No.	Qty.	Description
27	3272–10	7	Pin–Cotter
28	1–806800	2	Pin–Cotter
29	322–9	6	Screw–HH
30	103–0384	6	Spacer
31	103–0374	2	Retainer–Band, Brake

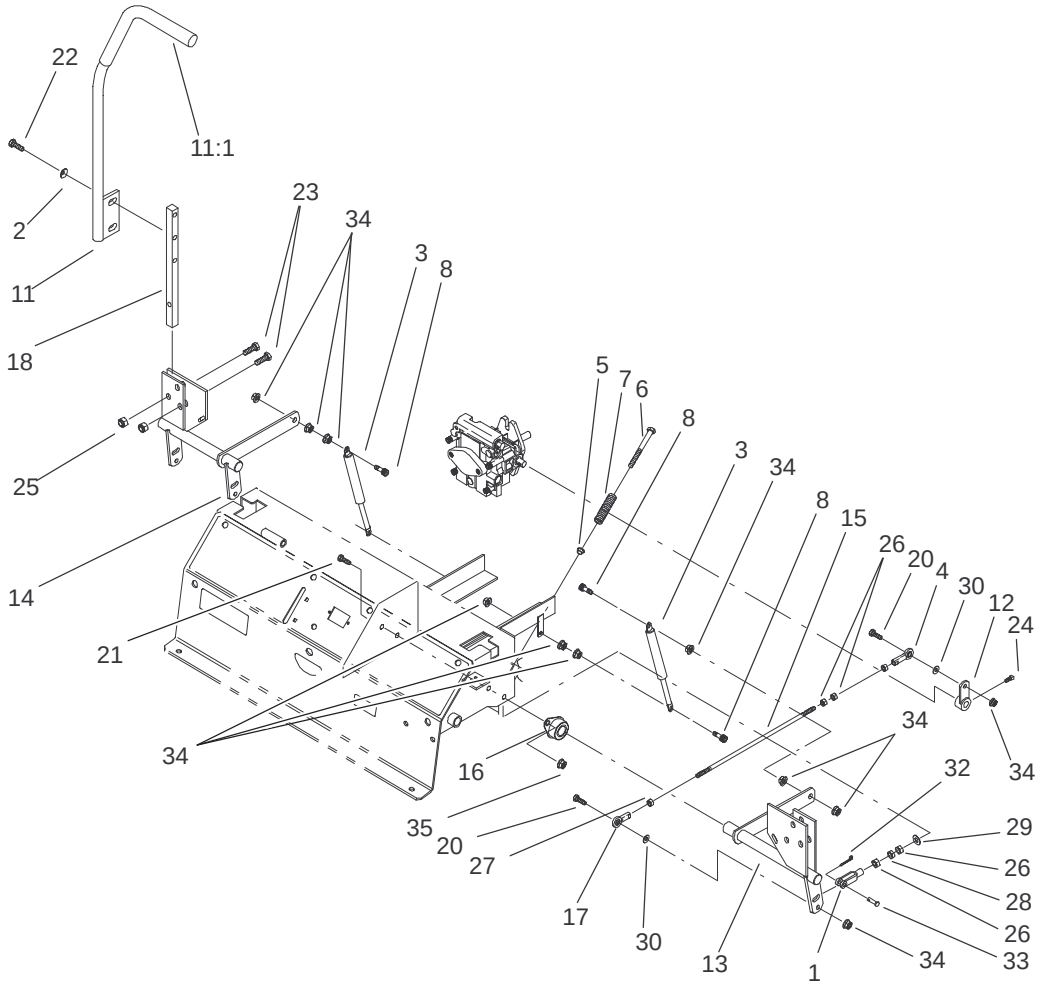

Sheet No.:6

Control Panel Assembly

Ref. No.	Part No.	Qty.	Description
1	1–303105	2	Yoke–Adjustable
2	98–5975	4	Washer–Belleville
3	1–523027	2	Damper–Control
4	1–543017	2	Balljoint–RH
5	1–603735	2	Bushing–Flanged, Nylon
6	1–603737	2	Bolt–Return, Neutral
7	1–603807	2	Spring–Return, Neutral
8	1–403180	4	Screw–HH
11	103–0632	1	RH Lever/Grip ASM
11:1	1–633257	1	Grip–Control, Motion
12	1–632208–03	2	Arm–Control, Pump
13	1–642319	1	Control–Motion, LH
14	1–642320	1	Control–Motion, RH
15	1–633153	2	Linkage–Pump/Lever
16	1–633102	4	Bearing–Flange, Side
17	1–633152	2	Balljoint–Thread, LH
18	103–0407	2	Arm–Shaft, Control
20	322–6	4	Screw–HH
21	323–4	8	Screw–HH
22	323–6	4	Screw–HH
23	323–9	6	Screw–HH
24	1–803022	2	Screw
25	3296–39	6	Nut–Lock, NI
26	3219–2	10	Nut–Hex

Ref. No.	Part No.	Qty.	Description
27	3220–20	2	Nut–Jam
28	3220–2	2	Nut
29	3256–2	2	Washer–Flat
30	3256–3	4	Washer–Flat
32	3272–5	2	Pin–Cotter
33	1–808280	2	Pin–Clevis
34	32128–20	16	Nut–HF
35	3290–357	8	Nut–Flange, Lock
*37	103–0631	1	LH Lever/Grip ASM

* Not illustrated

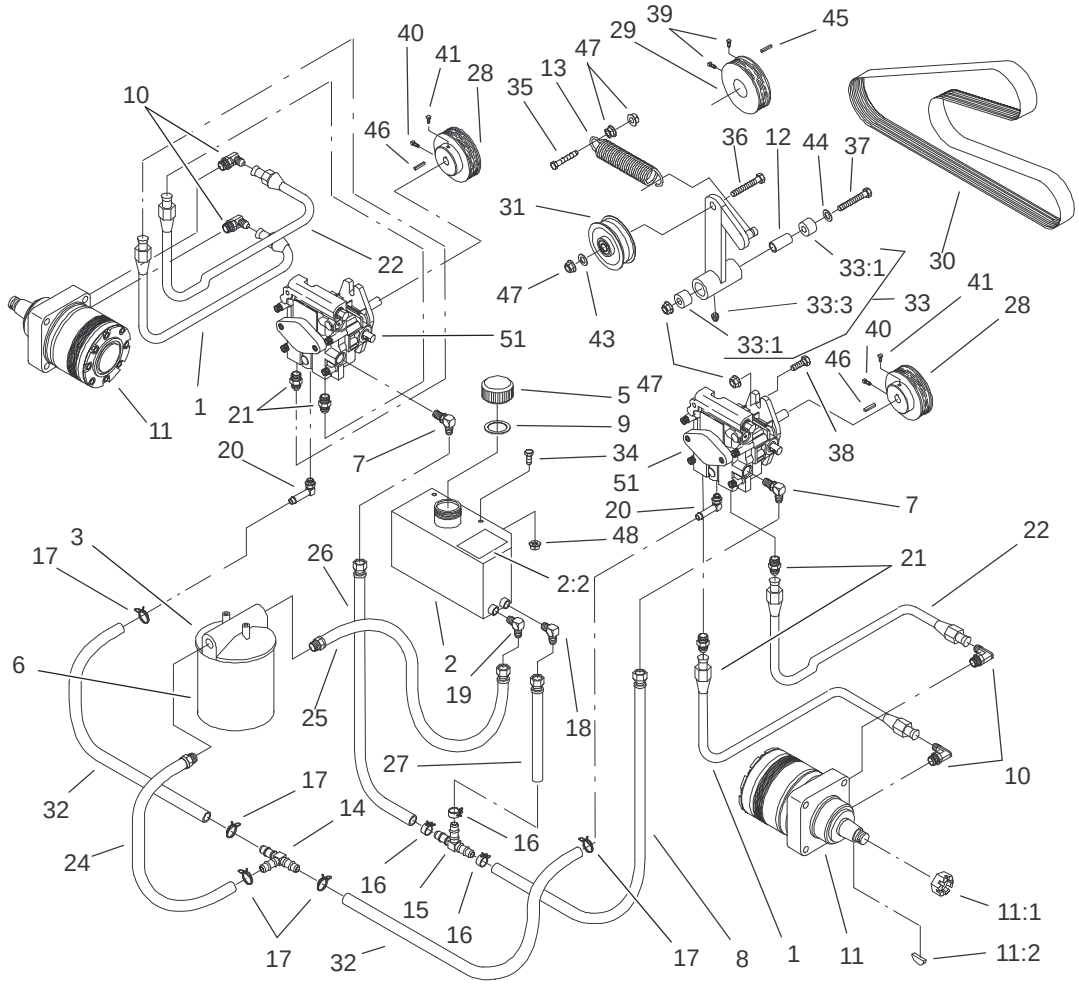

Sheet No.:7

Hydraulic System Assembly

Ref. No.	Part No.	Qty.	Description
1	1–633774	2	Hose–Upper
2	99–4625	1	Hydraulic Tank ASM
2:2	1–523552	1	Decal–Tank, Hydraulic
3	1–513006	1	Filter–Head
5	1–513167	1	Cap–Reservoir, Hydraulic
6	1–633750	1	Filter–Hydraulic
6	1–633752	1	Filter–Winter, Hydraulic
7	1–513840	2	Fitting–90°
8	1–522217	1	Low Pressure Hose ASM
9	1–523103	1	Gasket–Cap, Tank
10	1–633786	4	Fitting–90°
11	1–523328	2	Motor–Wheel
11:1	1–809036	1	Nut–HH
11:2	1–807020	1	Key–Woodruff
*11:99	1–000099	1	Kit–Seal
*11:99	1–000139	1	Kit–Bearing
12	1–603384	1	Bushing–Pivot, Idler
13	1–603413	1	Spring–Extension
14	1–603721	1	Fitting–Tee, Hose
15	1–603722	1	Fitting–Tee, Hose
16	1–603826	3	Clamp–Hose
17	1–603827	5	Clamp–Hose
18	1–603987	1	Fitting–Elbow

Ref. No.	Part No.	Qty.	Description
19	1–603988	1	Fitting–Elbow
20	1–603989	2	Fitting–Elbow
21	1–603990	4	Fitting–Straight
22	1–633775	2	Hose–Lower
24	1–632281	1	Hose ASM
25	1–632282	1	Hose ASM
26	1–632285	1	Hose ASM
27	1–632286	1	Hose ASM
28	1–633568	2	Sheave
29	1–633567	1	Sheave
30	1–633749	1	Belt–Drive, Pump
31	1–633167	1	Sheave–Idler
32	1–633335	2	Hose–Pressure, Low
33	1–634277	1	Bearing Arm ASM
33:1	1–513034	2	Sleeve–Bearing
33:3	302–40	1	Fitting–Grease
34	321–4	2	Screw–HH
35	323–8	1	Screw–HH
36	323–9	1	Screw–HH
37	1–800805	1	Screw–HH
38	323–7	4	Screw–HH
39	1–803022	2	Screw
40	3242–6	2	Screw–Set, SQH
41	3242–4	2	Screw–Set, SQH
43	3256–3	1	Washer–Flat
44	3256–4	1	Washer–Flat

* Not illustrated

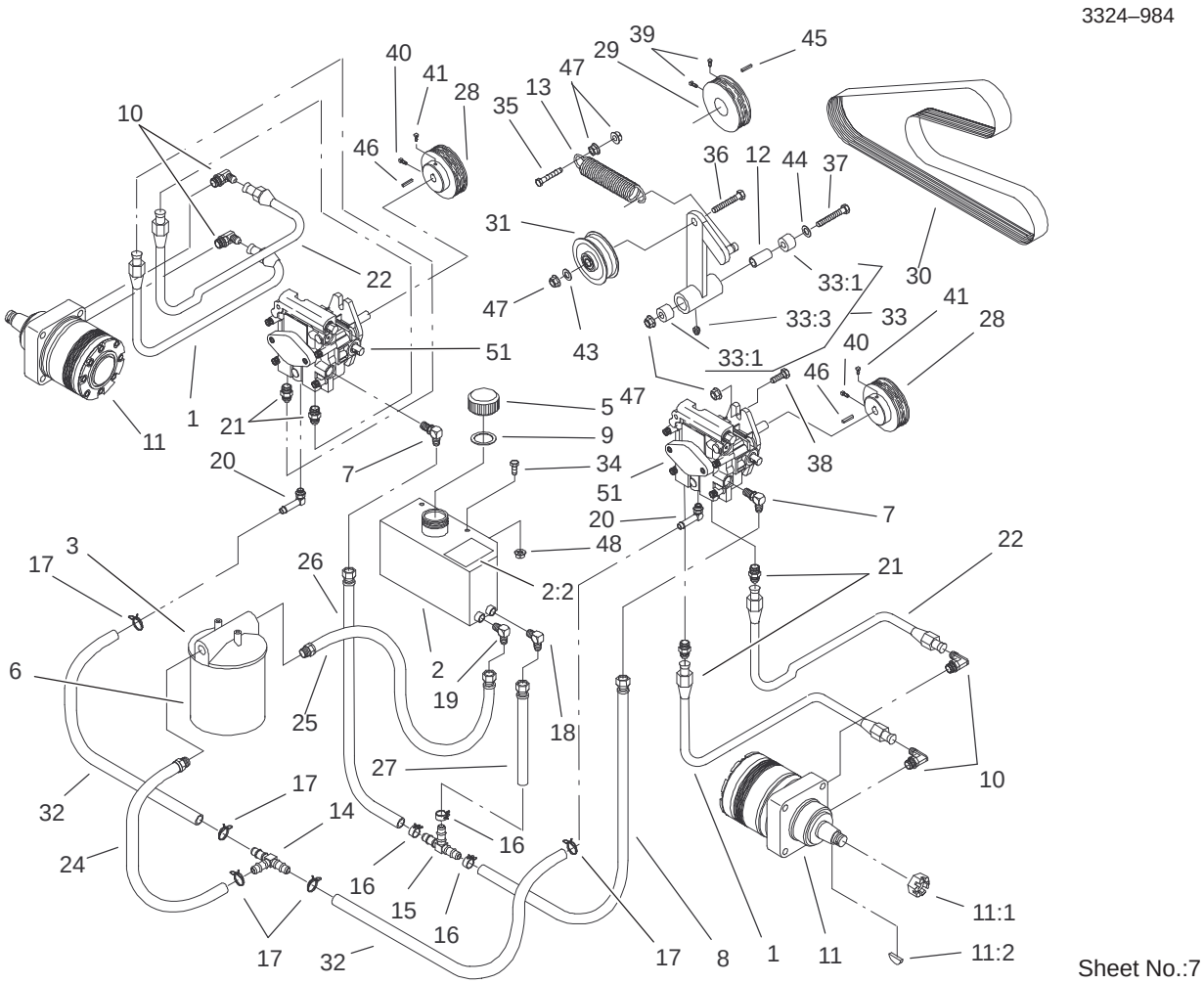

Hydraulic System Assembly (Continued)

Ref. No.	Part No.	Qty.	Description
45	13–2840	1	Key–Square
46	1–807272	2	Key–Machine
47	3290–357	8	Nut–Flange, Lock
48	32128–33	2	Nut–HF
51	1–603841	2	Pump–Hydraulic, RH
*51	80–6130	1	Kit–Seal, Overhaul

Ref. No.	Part No.	Qty.	Description

* Not illustrated

3324–984

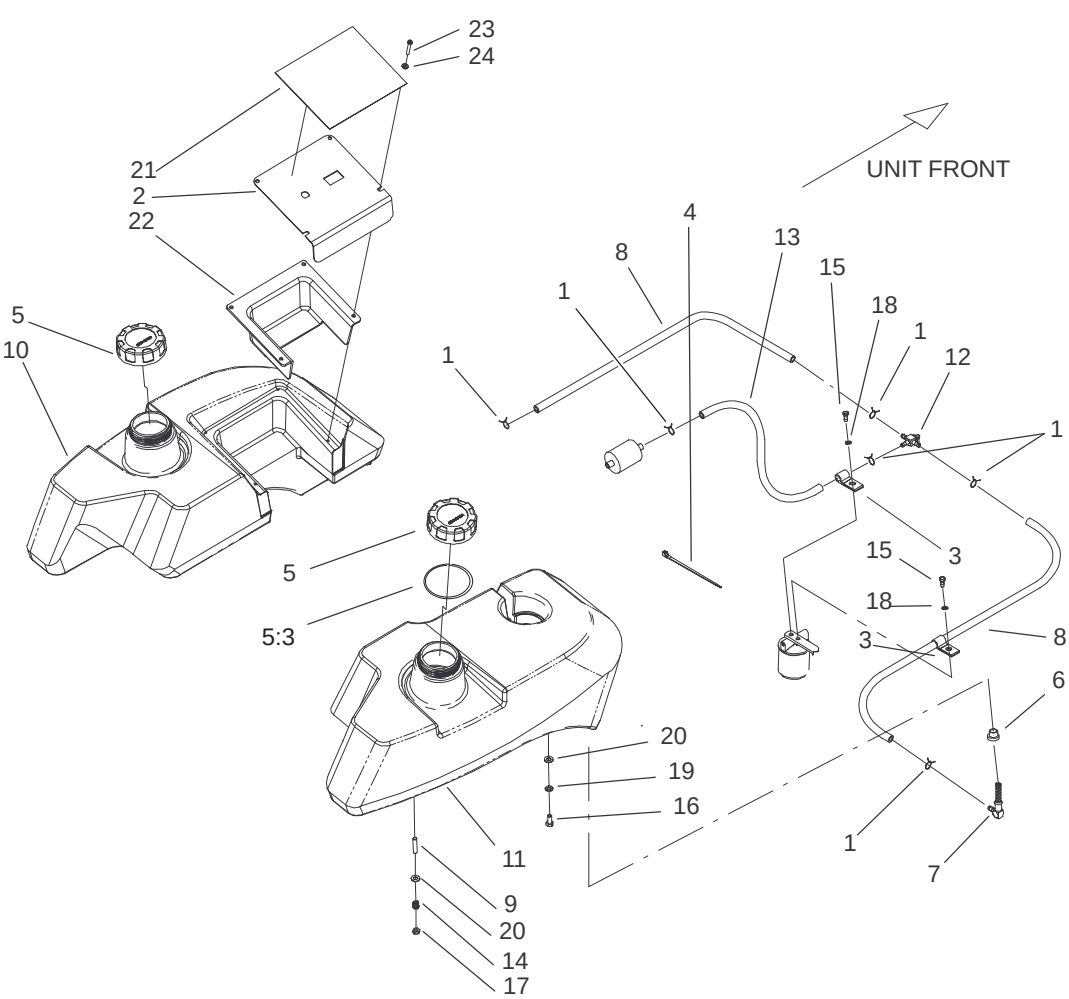

Sheet No.:8

Tank and Fuel Lines Assembly

Ref. No.	Part No.	Qty.	Description
1	1–303077	6	Clamp–Line, Fuel
2	99–4656–03	1	Panel–Control
3	1–513762	2	Clip–Loom
4	1–303335	1	Tie–Plastic
5	88–3980	2	Gas Cap ASM
5:3	88–4010	1	Gasket–Cap, Gas
6	1–513645	2	Bushing–Valve, Fuel
7	1–543277	2	Elbow–Tank, Fuel
8	1–543456	2	Hose–Fuel
9	1–633023	6	Stud
10	104–5100	1	Tank–Fuel, LH
11	104–5101	1	Tank–Fuel, RH
12	1–633347	1	Valve–Fuel
13	103–0216	1	Hose–Fuel
14	1–633349	6	Spring–Tank, Fuel
15	321–3	2	Screw–HH
16	322–3	2	Screw–HH
17	3296–47	6	Nut–Lock, NI
18	3253–3	2	Washer–Lock
19	3253–4	2	Washer–Lock
20	3256–23	8	Washer–Flat
21	99–4632	1	Decal–Panel, Control
22	99–4940	1	Shield–Panel, Control
23	1–803071	4	Screw
24	1–303435	4	Washer–Spring

Ref. No.	Part No.	Qty.	Description

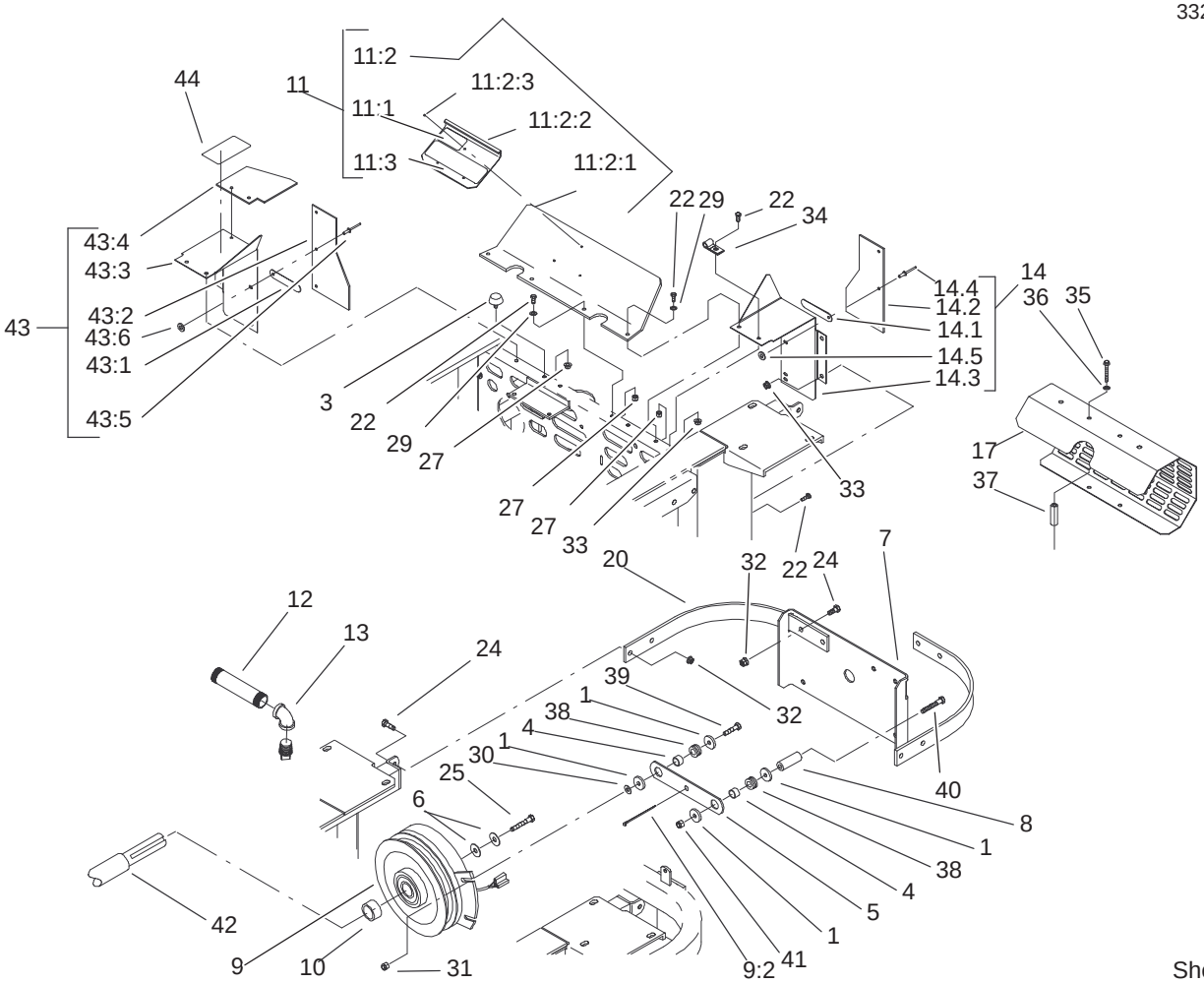

Sheet No.:9

Shields and Clutch Assembly

Ref. No.	Part No.	Qty.	Description
1	1–613235	4	Washer
3	1–523420	2	Bumper
4	1–633545	2	Spacer–Grommet
5	1–633543–03	1	Strap–Clutch, Brake
6	1–603610	2	Washer–Spring
7	1–633615–03	1	Guard–Clutch
8	1–633988	1	Spacer–Anchor, Clutch
9	103–0662	1	Clutch ASM
10	1–633453	1	Spacer,Clutch
11	1–644276	1	Shield ASM
11:1	1–633462	1	Decal–Important
11:2	1–634308	1	Shield/Lift ASM
11:2:1	1–633298	1	Shield–Engine
11:2:2	1–633300–03	1	Lift–Shield
11:2:3	1–803035	3	Rivet–Pop
11:3	103–0368	1	Decal–Devices, Rotating
12	1–543232	1	Nipple
13	1–303428	1	Elbow–90°
14	1–634796	1	LH Shield ASM
14:1	1–523285	1	Clip–Baffle, Rear
14:2	1–633301	1	Shield–Engine
14:3	1–633795–03	1	Baffle–Engine Shield, LH
14:4	1–803035	3	Rivet–Pop

Ref. No.	Part No.	Qty.	Description
14:5	3256–63	3	Washer–Flat
17	1–643313–03	1	Guard–Muffler
20	1–643264–03	2	Bracket–Guard, Top
22	321–4	10	Screw–HH
24	323–6	6	Screw–HH
25	3212–10	1	Screw–HH
27	3296–42	6	Nut–Lock NI
29	3256–2	4	Washer–Flat
30	3256–3	1	Washer–Flat
31	32128–20	1	Nut–HF
32	3290–357	4	Nut–Flange, Lock
33	32128–33	5	Nut–HF
34	1–633396	1	Clip–Loom
35	1–809076	2	Screw
36	1–323235	2	Washer–Spring
37	1–323236	2	Spacer
38	1–633630	2	Grommet–Brake
39	322–6	1	Screw–HH
40	322–19	1	Screw–HH
41	3296–29	1	Nut–Lock
42	1–643026	1	Engine–Kohler, 23hp
43	1–644316	1	RH Shield ASM
43:1	1–523285	1	Clip–Baffle, Rear
43:2	1–633301	1	Shield–Engine
43:3	1–633794–03	1	Baffle–Engine Shield, RH

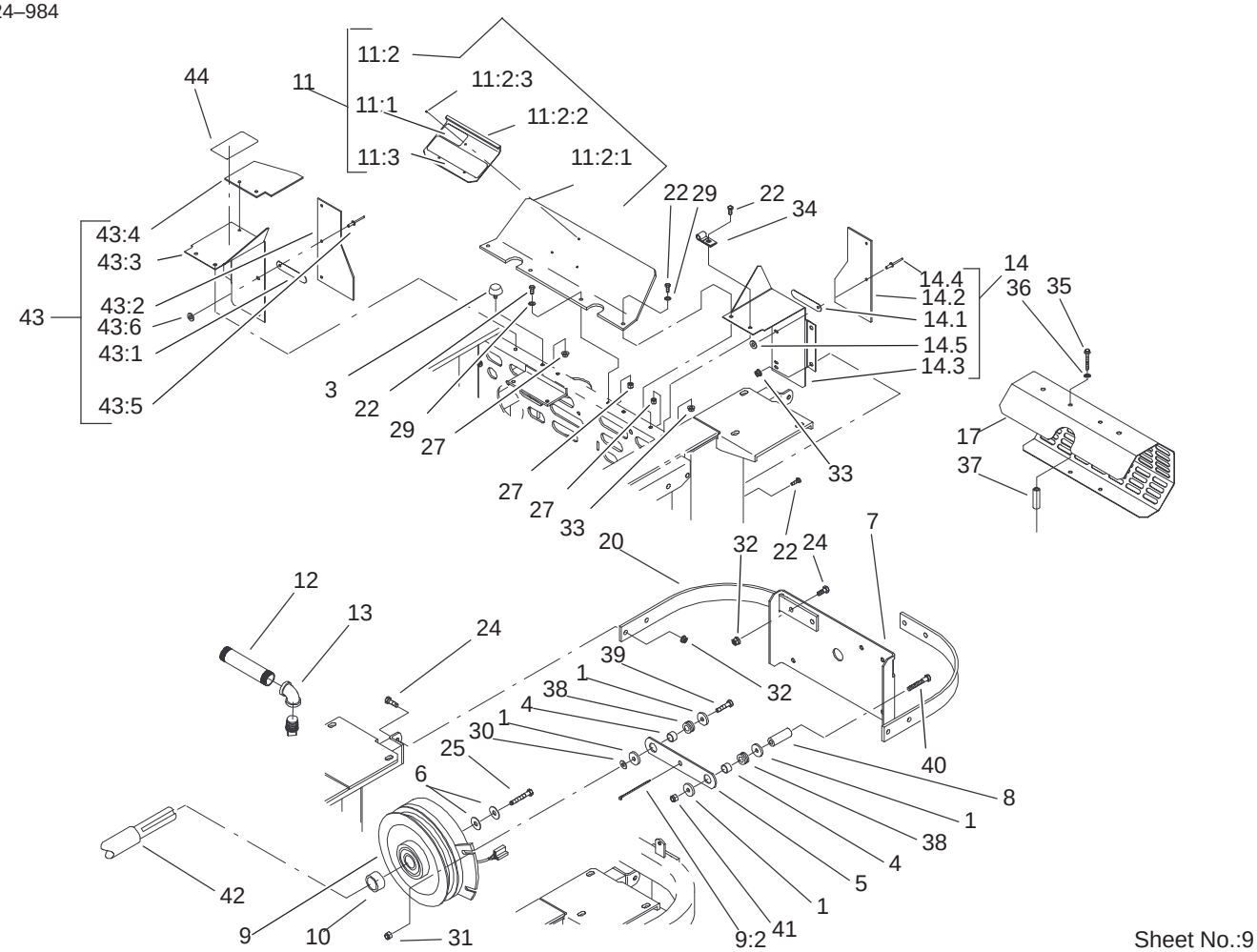

Sheet No.:9

Shields and Clutch Assembly (Continued)

Ref. No.	Part No.	Qty.	Description
43:4	1–643315	1	Baffle–Cooler, Engine
43:5	1–803035	5	Rivet–Pop
43:6	3256–63	5	Washer–Flat
44	1–643339	1	Decal–Routing, Belt

Ref. No.	Part No.	Qty.	Description

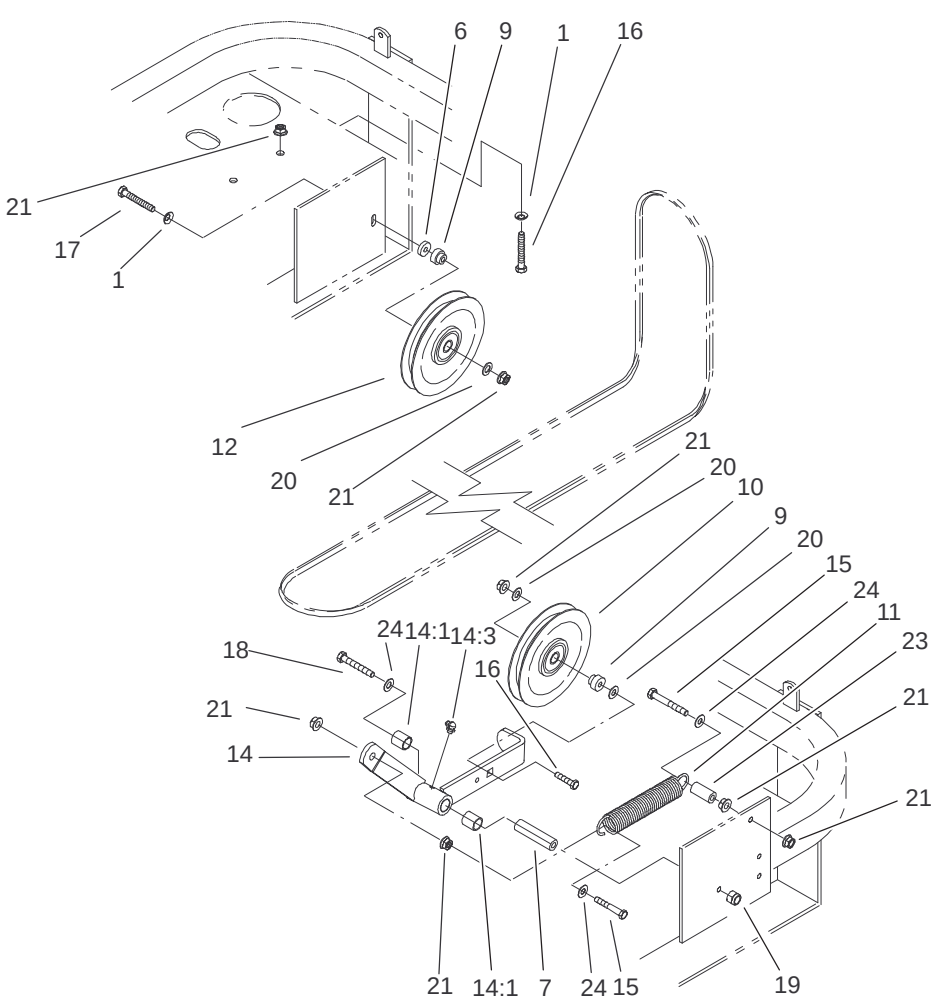

Sheet No.:10

Idler Assembly

Ref. No.	Part No.	Qty.	Description
1	98–5975	5	Washer–Belleville
6	1–603050	1	Spacer
7	1–603384	1	Bushing–Pivot, Idler
9	1–603496	2	Bushing–Idler
10	99–4638	1	Idler
11	1–603402	1	Spring–Extension
12	1–633166	1	V–Belt–Idler
14	99–4677	1	Idler Arm ASM
14:1	1–513034	2	Sleeve–Bearing
14:3	302–40	1	Fitting–Grease
15	323–11	2	Screw–HH
16	323–9	5	Screw–HH
17	323–13	1	Screw–HH
18	1–800805	1	Screw–HH
19	3296–39	1	Nut–Lock, NI
20	3256–24	3	Washer–Flat
21	3290–357	10	Nut–Flange, Lock
23	1–603401	1	Spacer–Fender
24	3256–4	3	Washer–Flat

Ref. No.	Part No.	Qty.	Description

3324–984

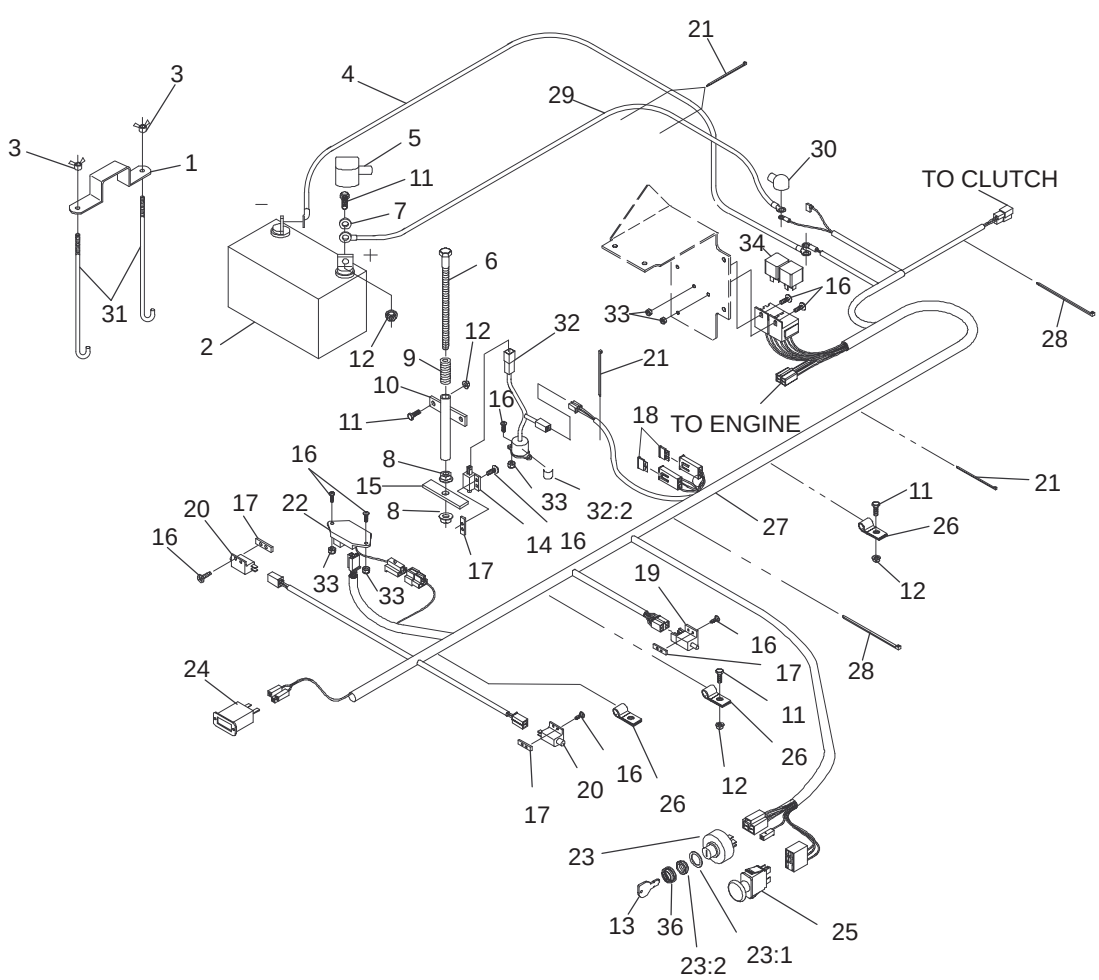

Sheet No.:11

Electrical System Assembly

Ref. No.	Part No.	Qty.	Description
1	1–633652–03	1	Strap–Holddown, Battery
2	1–603479	1	Battery
3	1–543792	2	Wingnut
4	1–633307	1	Wire–Ground
5	1–543391	1	Insulator–Battery
6	1–800282	1	Screw–HH
7	3256–2	2	Washer–Flat
8	32128–20	2	Nut–HF
9	1–523415	1	Spring–Switch, Seat
10	1–522424–03	1	Mount–Spring, Seat
11	321–4	6	Screw–HH
12	32128–33	6	Nut–HF
13	63–8360	2	Key–Ignition
14	1–513152	1	Switch–Closed, Normally
15	1–513180	1	Plate–Switch, Seat
16	3290–500	14	Screw–PPH
17	1–633181	4	Plate–Tapped
18	1–816001	2	Fuse–Type, Blade
19	1–633111	1	Switch
20	1–513051	2	Switch–Open, Normally
21	1–303287	5	Tie–Plastic
22	100–6186	1	Module–Delay, Seat
23	88–9830	1	Switch–Ignition

Ref. No.	Part No.	Qty.	Description
23:1	3254–5	1	Washer–Lock, Internal
23:2	218–461	1	Nut–HH
24	1–513374	1	Meter–Hours
25	1–633673	1	Switch–Delta
26	1–633396	3	Clip–Loom
27	100–4340	1	Harness–Wire
28	1–303335	2	Tie–Plastic
29	1–523281	1	Wire–Starter
30	1–543393	1	Insulator–Solenoid
31	1–633651	2	Bolt–Holddown
32	1–644427	1	Tilt Switch ASM
32:2	1–643401	1	Decal–Switch, Mercury
33	3296–2	6	Nut–Lock
34	1–643275	2	Relay
36	103–0499	1	Seal–Switch, Ignition

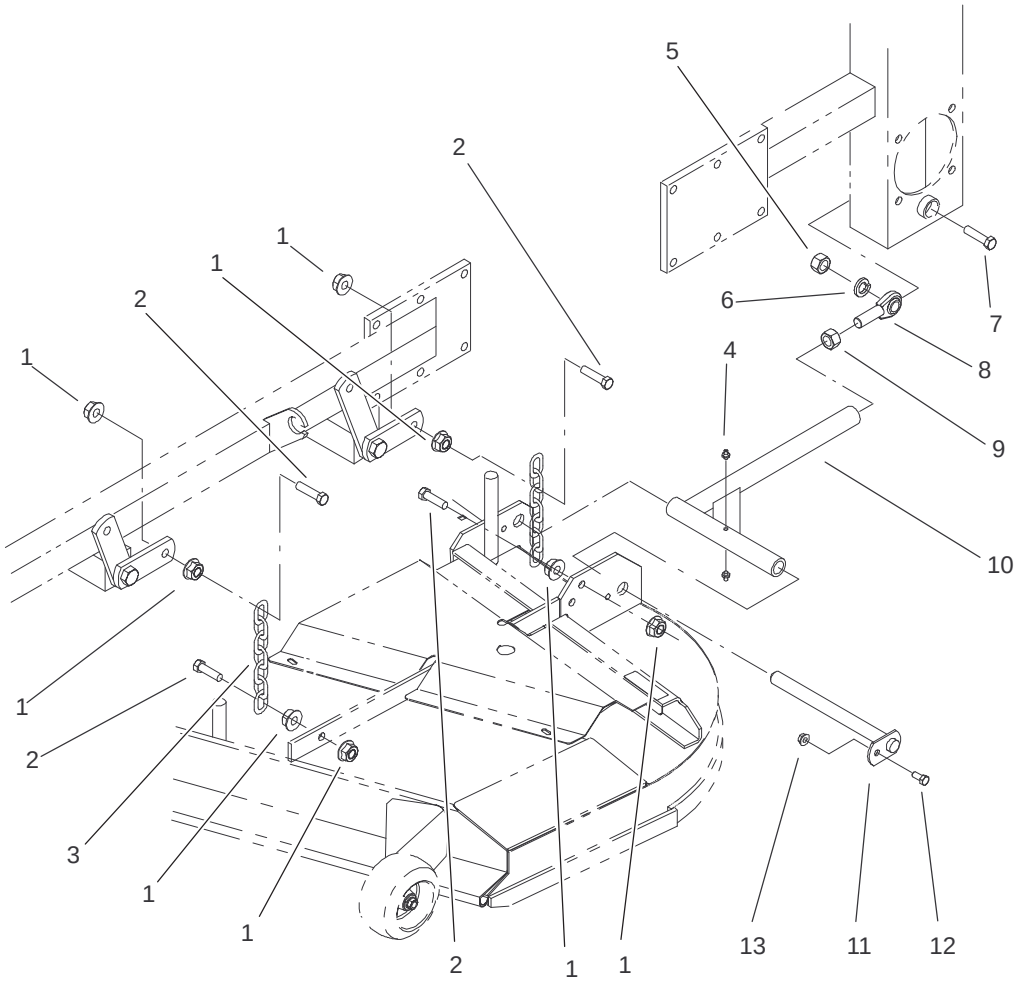

Sheet No.:12

Frame and Deck Assembly

Ref. No.	Part No.	Qty.	Description
1	32128–37	16	Nut–HF
2	324–6	8	Screw–HH
3	1–633447	4	Chain–Lift, Deck
4	302–19	4	Fitting–Grease
5	3217–11	2	Nut–Hex
6	3253–8	2	Washer–Lock
7	327–11	2	Screw–HH
8	1–633029	2	Balljoint–Spherical
9	3219–6	2	Nut–Hex
10	103–1072–01	2	Strut–Deck
11	1–632199–01	2	Pin–Strut, Deck
12	322–3	2	Screw–HH
13	3296–29	2	Nut–Lock

Ref. No.	Part No.	Qty.	Description

3324–984

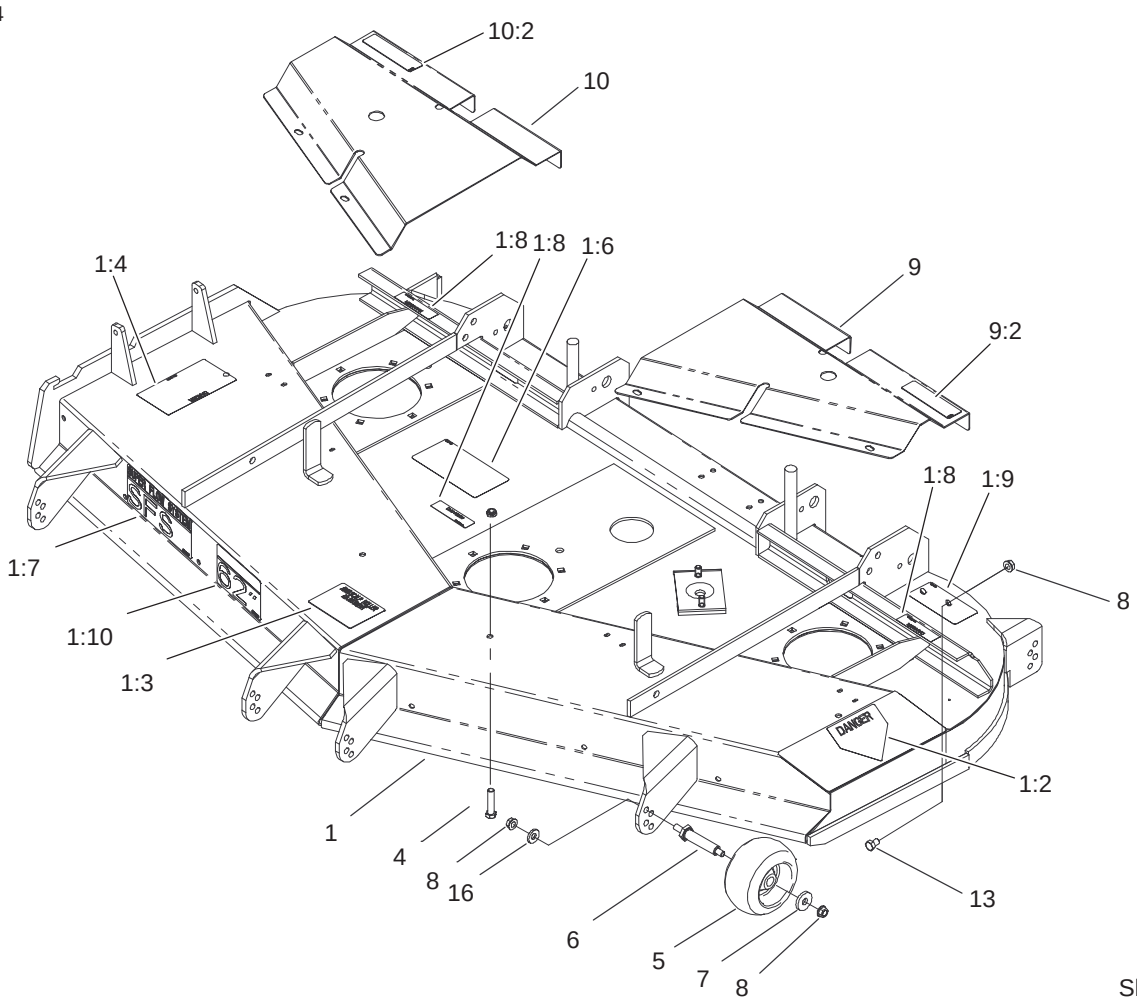

Sheet No.:32

Deck, Deflector and Roller Assembly

Ref. No.	Part No.	Qty.	Description
1	104–7762	1	Deck ASM
1:2	43–8480	1	Decal–Danger
1:3	98–3798	1	Decal–Wheel, Gage
1:4	66–1340	1	Decal–Danger
1:6	99–4686	1	Decal–Routing, Belt
1:7	99–4619	1	Decal–Sfs
1:8	98–5954	3	Decal–Missing, Cover
1:9	93–7818	1	Decal–Torque, Blade
1:10	99–4620	1	Decal–Deck
4	323–4	4	Screw–HH
5	68–2730	6	Gage–Wheel
6	99–2842	6	Spacer–Wheel
7	1–373034	6	Washer–Swivel
8	3290–357	18	Nut–Flange, Lock
9	98–5955	1	LH Cover ASM
9:2	67–5360	1	Decal–Danger
10	98–5956	1	RH Cover ASM
10:2	67–5360	1	Decal–Danger
13	323–2	2	Screw–HH
16	98–5975	6	Washer–Belleville

Ref. No.	Part No.	Qty.	Description

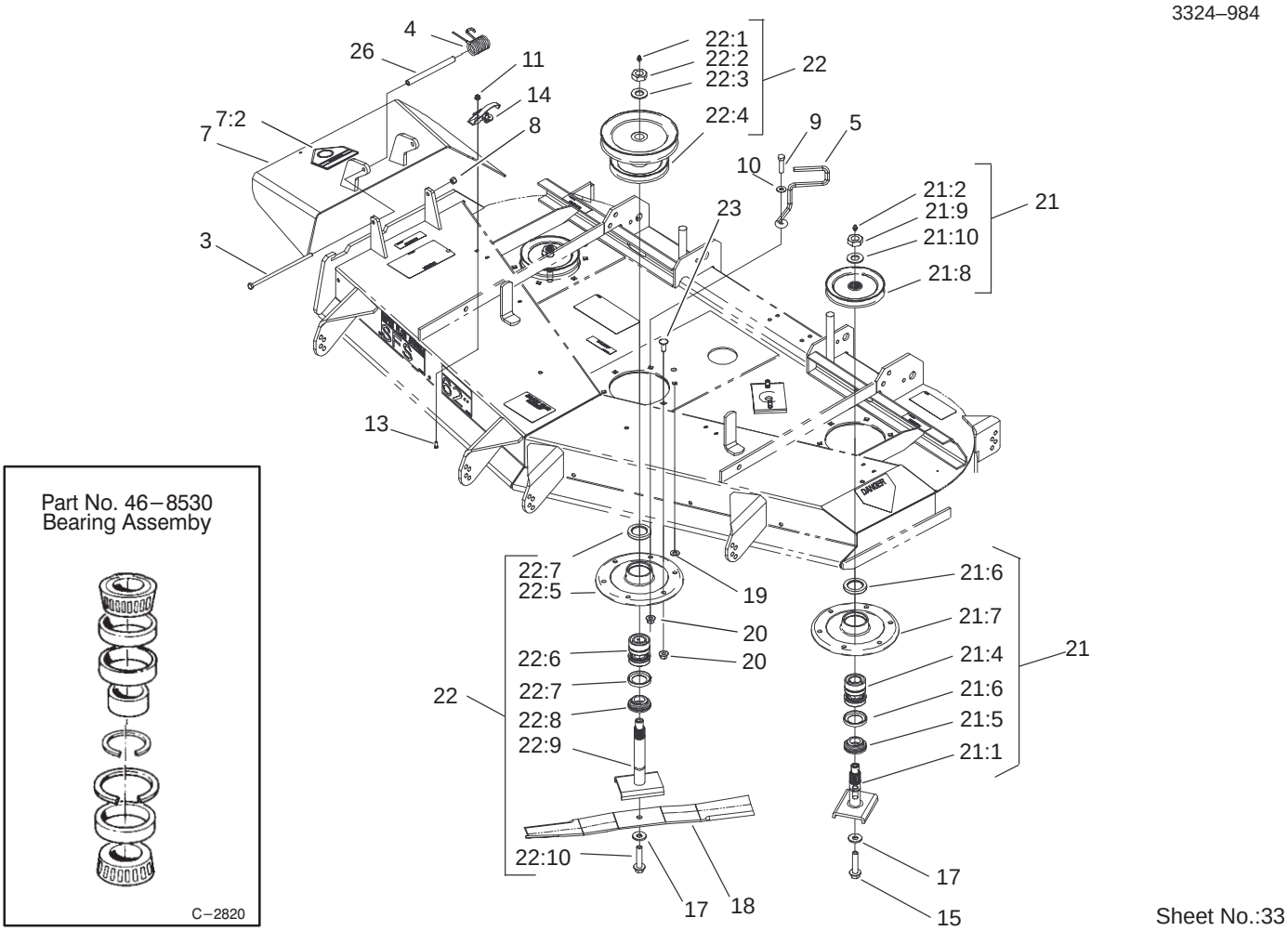

Sheet No.:33

Spindle and Pulley Assembly

Ref. No.	Part No.	Qty.	Description
3	322–50	1	Screw–Cap
4	104–8554	1	Spring–Torsion
5	99–8933	1	Guide–Belt
7	104–7763	1	Deflector ASM
7:2	54–9220	1	Decal–Danger
8	3296–29	1	Nut–Lock
9	323–8	1	Screw–HH
10	3256–3	1	Washer–Flat
11	32128–17	8	Nut–Lock, Flange
13	3290–321	8	Screw–HWH
14	249–21	4	Clamp–Slotted
15	92–5816	2	Bolt–Blade
17	1–513435	3	Washer–Spring
18	44–6250	3	Blade
19	3256–24	1	Washer–Flat
20	32128–21	18	Nut–HF
21	99–4640	2	Outer Spindle ASM
21:1	27–0920	1	Shaft–Spindle
21:2	302–2	1	Fitting–Grease
21:4	46–8530	1	Bearing ASM
21:5	27–0950	1	Spacer–Bearing, Spindle
21:6	253–139	2	Seal–Oil
21:7	61–4160	1	Housing–Spindle
21:8	99–4614	1	Pulley & Hub
21:9	32146–20	1	Nut–Jam

Ref. No.	Part No.	Qty.	Description
21:10	7–4150	1	Washer–Pinion
22	99–4944	1	Middle Spindle ASM
22:1	302–2	1	Fitting–Grease
22:2	32146–20	1	Nut–Jam
22:3	92–5836	1	Washer–Axle
22:4	99–4939	1	Pulley & Hub ASM
22:5	61–4160	1	Housing–Spindle
22:6	46–8530	1	Bearing ASM
22:7	253–139	2	Seal–Oil
22:8	27–0950	1	Spacer–Bearing, Spindle
22:9	51–3551	1	Shaft–Spindle
22:10	92–5816	1	Bolt–Blade
23	3231–22	17	Screw–CARR
26	104–8555	1	Spacer–Deflector, Mounting

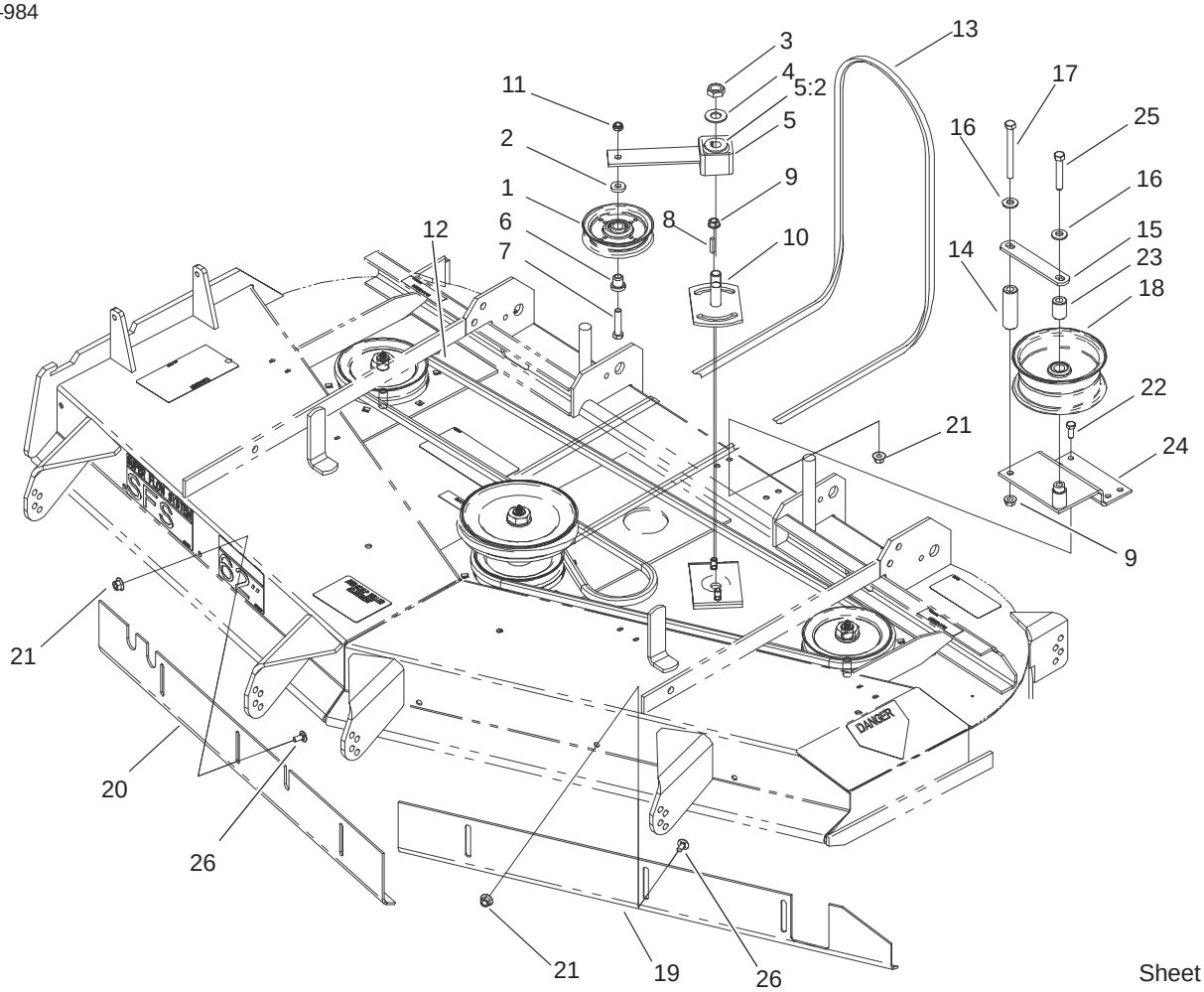

Sheet No.:34

Belts and Idler Arm Assembly

Ref. No.	Part No.	Qty.	Description
1	65–5940	1	Pulley–Idler
2	7–0081	1	Washer–Flat
3	3296–71	1	Nut–Lock NI
4	3256–27	1	Washer–Flat
5	27–8580	1	Idler Socket & Bushing ASM
5:2	27–8490	1	Bushing–Rubber, Idler
6	65–5950	1	Bushing–Pulley
7	3211–8	1	Screw–HH
8	5–1077	1	Key–Square
9	3290–357	3	Nut–Flange, Lock
10	44–6301	1	Plate–Idler, LH
11	3296–5	1	Nut–Lock, NI
12	44–6260	1	V–Belt
13	99–4647	1	V–Belt–Drive, Deck
14	99–4659	1	Spacer–Bracket
15	1–653189	1	Plate–Guide, Belt
16	98–5975	2	Washer–Belleville
17	323–42	1	Screw–HH
18	1–413099	1	Pulley–Idler
19	99–2833–03	1	Baffle–Front, LH
20	99–2834–03	1	Baffle–Front, RH
21	32128–20	10	Nut–HF
22	322–3	4	Screw–HH
23	1–653190	1	Spacer
24	99–4684–01	1	Bracket–Pulley

Ref. No.	Part No.	Qty.	Description
25	323–11	1	Screw–HH
26	3230–18	6	Screw–CARR

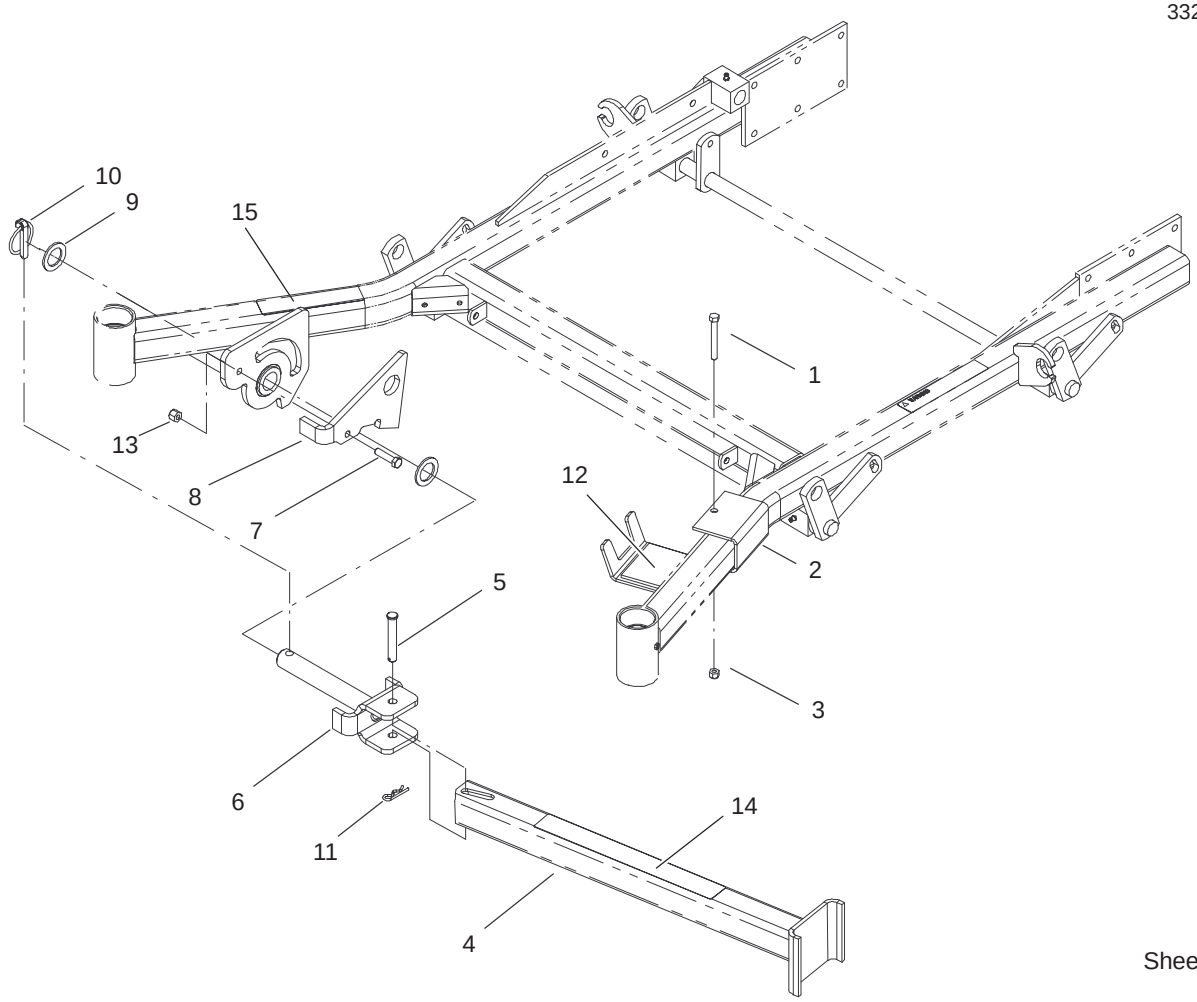

Sheet No.: 51

Stand Assembly

Ref. No.	Part No.	Qty.	Description
1	322–13	1	Screw–HH
2	100–9699–01	1	Bracket–Cradle
3	3296–29	1	Nut–Lock
4	100–9695–01	1	Leg ASM
5	283–55	1	Pin–Clevis
6	100–9692–01	1	Pivot Pin ASM
7	323–8	1	Screw–HH
8	100–9686–01	1	Bracket–Latch
9	3–6781	2	Washer–Thrust
10	283–71	1	Pin–Lynch
11	3290–355	1	Pin–Hair
12	104–7765	1	Cushion–Rubber
13	3296–39	1	Nut–Lock, NI
14	104–7758	1	Decal–Z Stand
15	104–7759	1	Decal–warning

Ref. No.	Part No.	Qty.	Description

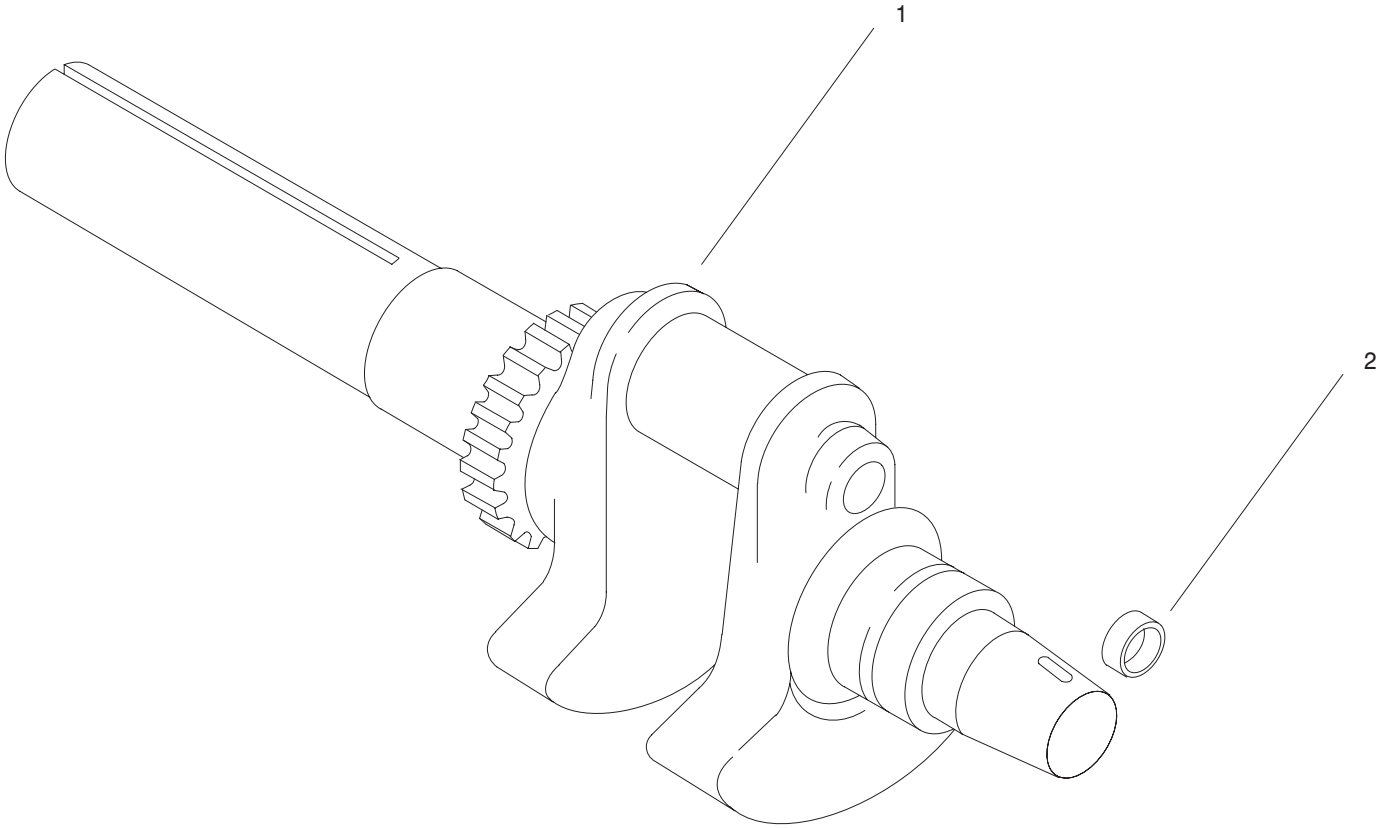

Group 1 – Crankshaft (CH22S PS–76513 Kohler)

Ref. No.	Part No.	Qty.	Description
1	24 014 84	1	Crankshaft
2	52 139 09	1	Plug, cup

Ref. No.	Part No.	Qty.	Description

Obtain Parts From Kohler

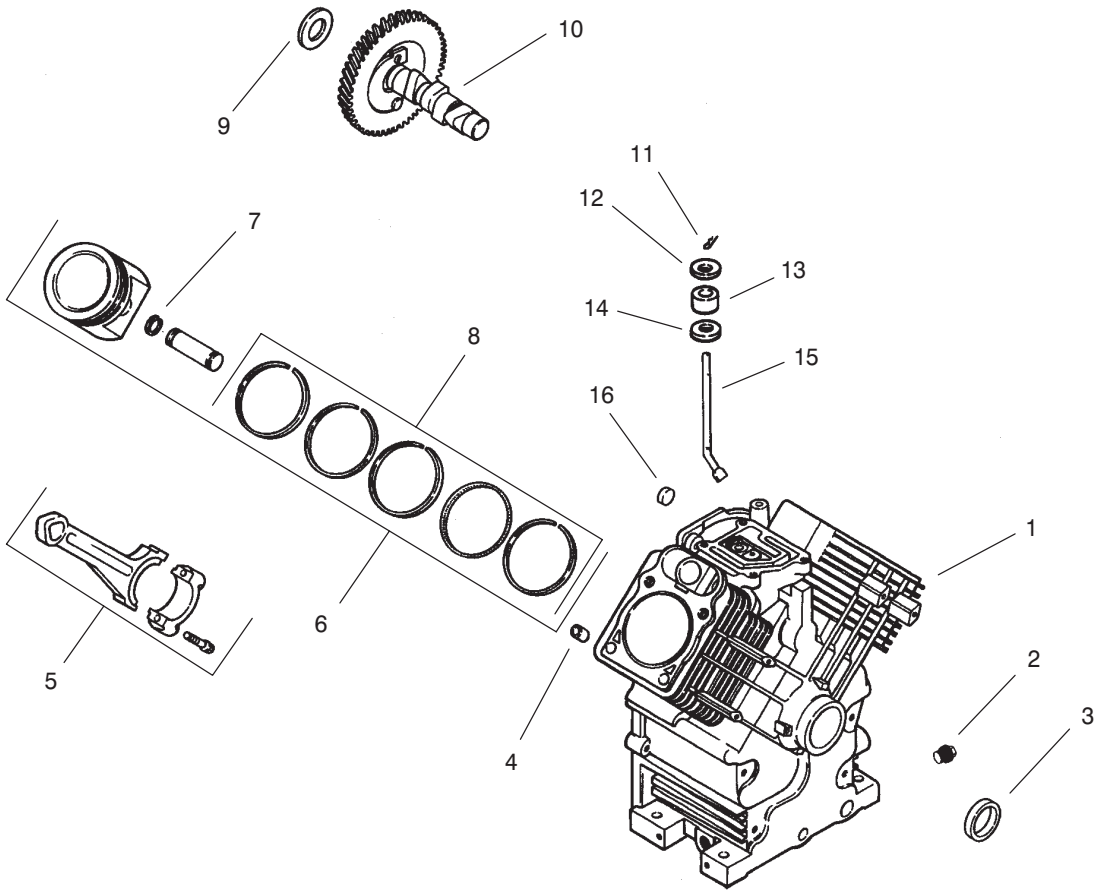

Group 2 – Crankcase (CH22S PS–76513 Kohler)

Ref. No.	Part No.	Qty.	Description
1			Crankcase
2	X–75–10	2	Plug, pipe
3	24 032 01	1	Seal, oil front
4	12 380 17	6	Pin, dowel locating
5	24 067 13	2	Connecting Rod (Std.)
	24 067 14	2	Connecting Rod (.25)
6	24 874 09	2	Piston w/Ring Set (Std.)
	24 874 10	2	Piston w/Ring Set (.25)
	24 874 11	2	Piston w/Ring Set (.50)
7	24 018 01	4	Retainer, piston pin
8	24 108 08	2	Ring Set (Std.)
	24 108 09	2	Ring Set (.25)
	24 108 10	2	Ring Set (.50)
9	12 422 09	A/R	Shim, camshaft – red
	12 422 13	A/R	Shim, camshaft – black
	12 422 07	A/R	Shim, camshaft – white
	12 422 08	A/R	Shim, camshaft – blue
	12 422 10	A/R	Shim, camshaft – yellow
	12 422 11	A/R	Shim, camshaft – green
	12 422 12	A/R	Shim, camshaft – gray
10	24 012 10	1	Camshaft
11	12 380 04	1	Pin, hitch
12	M–0631005	1	Washer, flat

Ref. No.	Part No.	Qty.	Description
13	12 032 01	1	Seal, governor cross shaft
14	X–25–102	1	Washer, plain
15	24 144 01	1	Shaft, governor cross
16	52 139 09	1	Plug, cup

Obtain Parts From Kohler

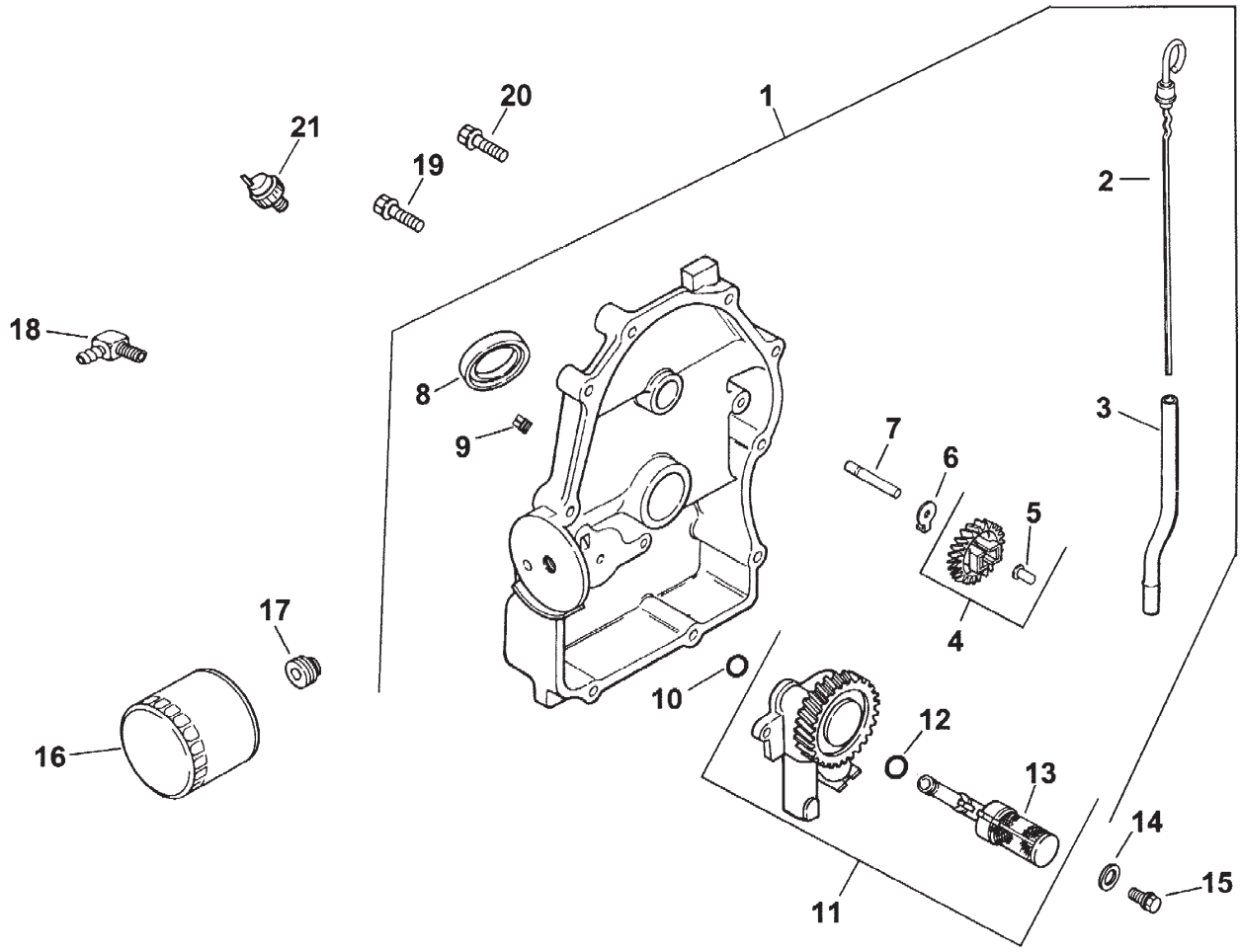

Group 3 – Oil Pan/Lubrication (CH22S PS–76513 Kohler)

Ref. No.	Part No.	Qty.	Description
1	24 009 83	1	Plate, closure assembly (Includes 2–12)
2	24 038 06	1	Dipstick
3	24 123 08	1	Tube, dipstick
4	24 043 12	1	Kit, governor gear (Includes 5)
5	12 380 01	1	Pin, governor regulating
6	52 448 02	1	Tab, locking
7	12 144 02	1	Shaft, governor gear
8	52 032 08	1	Seal, oil (PTO end)
9	X–75–23	2	Plug,pipe 1/8”
10	24 153 08	1	O–Ring
11	24 393 10	1	Oil pump assembly (Includes 12,13)
12	24 153 01	1	O–Ring, oil pick–up
13	24 381 04	1	Pick–up, oil
14	M–0631005	2	Washer, plain 6 mm
15	M–0645025	2	Screw, hex flange
16	52 050 02	1	Filter, oil
17	24 136 01	1	Nipple,oil filter
18	25 155 02	1	Connector
19	24 086 16	9	Screw, hex flange
20	24 086 17	1	Screw, hex flange

Ref. No.	Part No.	Qty.	Description
21	24 099 03	1	Switch, pressure

Obtain Parts From Kohler

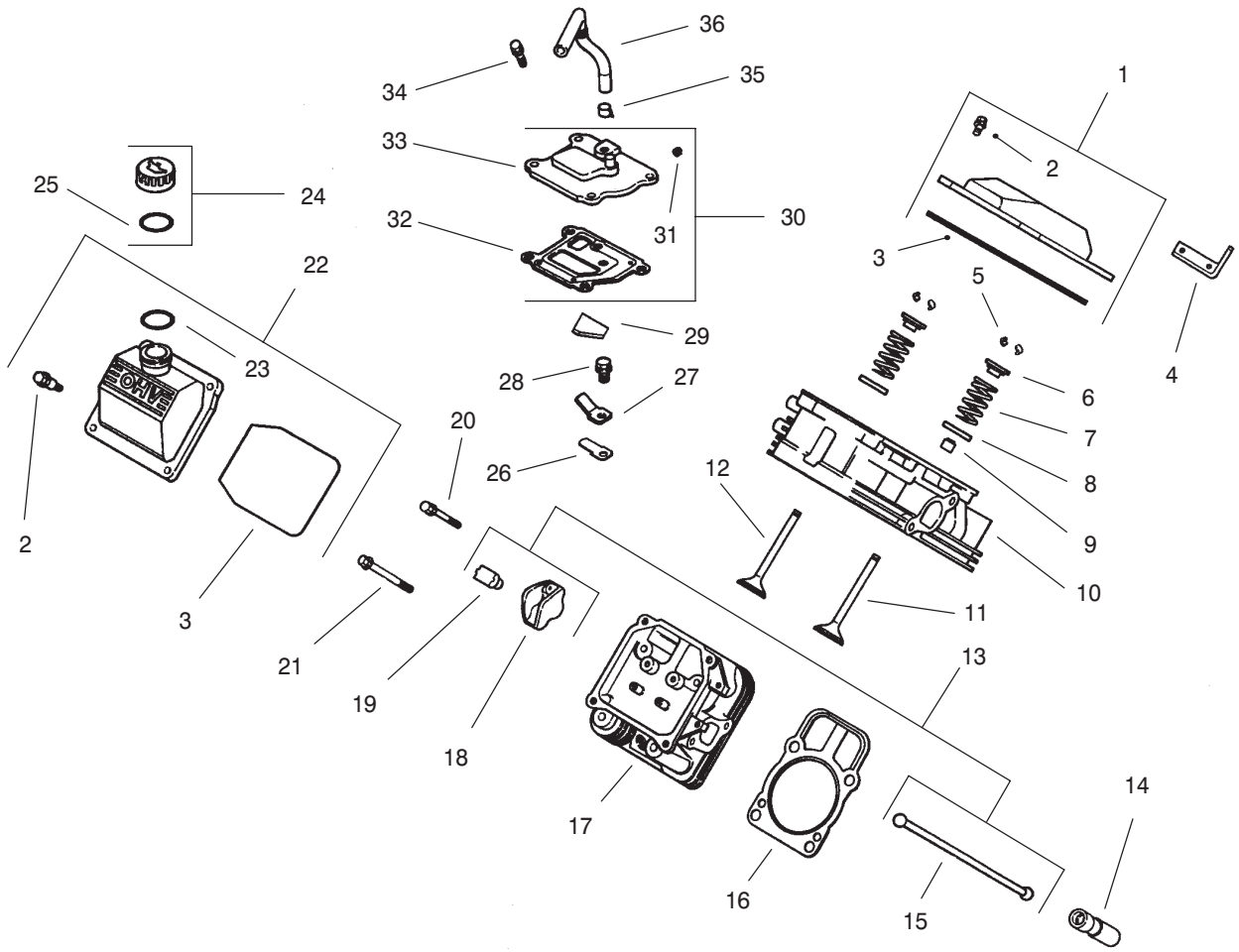

Group 4 – Head/Valve/Breather (CH22S PS–76513 Kohler)

Ref. No.	Part No.	Qty.	Description
1	24 755 74	1	Kit, valve cover – plain (Includes 2–3)
2	24 086 32	4	Screw, shoulder
3	24 153 16	1	O–Ring, valve cover
4	24 445 01	1	Strap, lifting
5	12 755 03	4	Kit, retainer
6	12 173 01	4	Cap, valve spring
7	24 089 02	4	Spring, valve
8	235011	4	Retainer, spring
9	24 032 05	2	Seal, valve stem
10	24 318 13	1	Head assembly, #1 cylinder
11	24 017 01	2	Valve, intake (Std.)
	24 017 02	2	Valve, intake (.25)
12	24 016 01	2	Valve, exhaust (Std.)
	24 016 02	2	Valve, exhaust (.25)
13	24 755 66	1	Kit, valve train (Includes 15,18,19)
14	12 351 02	4	Lifter, valve
15	24 411 05	4	Rod, push
16	24 041 40	2	Gasket, cylinder head
17	24 318 10	1	Head assembly, #2 cylinder
18	25 186 01	4	Arm, rocker
19	24 599 01	4	Pivot, rocker arm
20	M–0640034	4	Screw, hex. flange

Ref. No.	Part No.	Qty.	Description
21	24 086 44	8	Screw, hex. flange
22	24 755 75	1	Kit, valve cover – oil fill (Includes 2,3,23)
23	24 153 09	1	O–Ring
24	24 755 46	1	Kit, oil fill cap (Includes 25)
25	12 153 03	1	O–Ring, oil fill cap
26	24 402 03	1	Reed, breather
27	12 018 01	1	Retainer, breather reed
28	M–0545010	1	Screw, hex. flange
29	24 050 01	1	Filter, breather
30	24 033 01	1	Kit, breather (Includes 31–33)
31	X–75–23	1	Plug, allen head pipe
32	24 041 23	1	Gasket, breather
33	24 096 02	1	Cover, breather
34	M–0645020	4	Screw, hex. flange
35	X–426–9	1	Clamp, breather
36	24 326 06	1	Hose, breather

Obtain Parts From Kohler

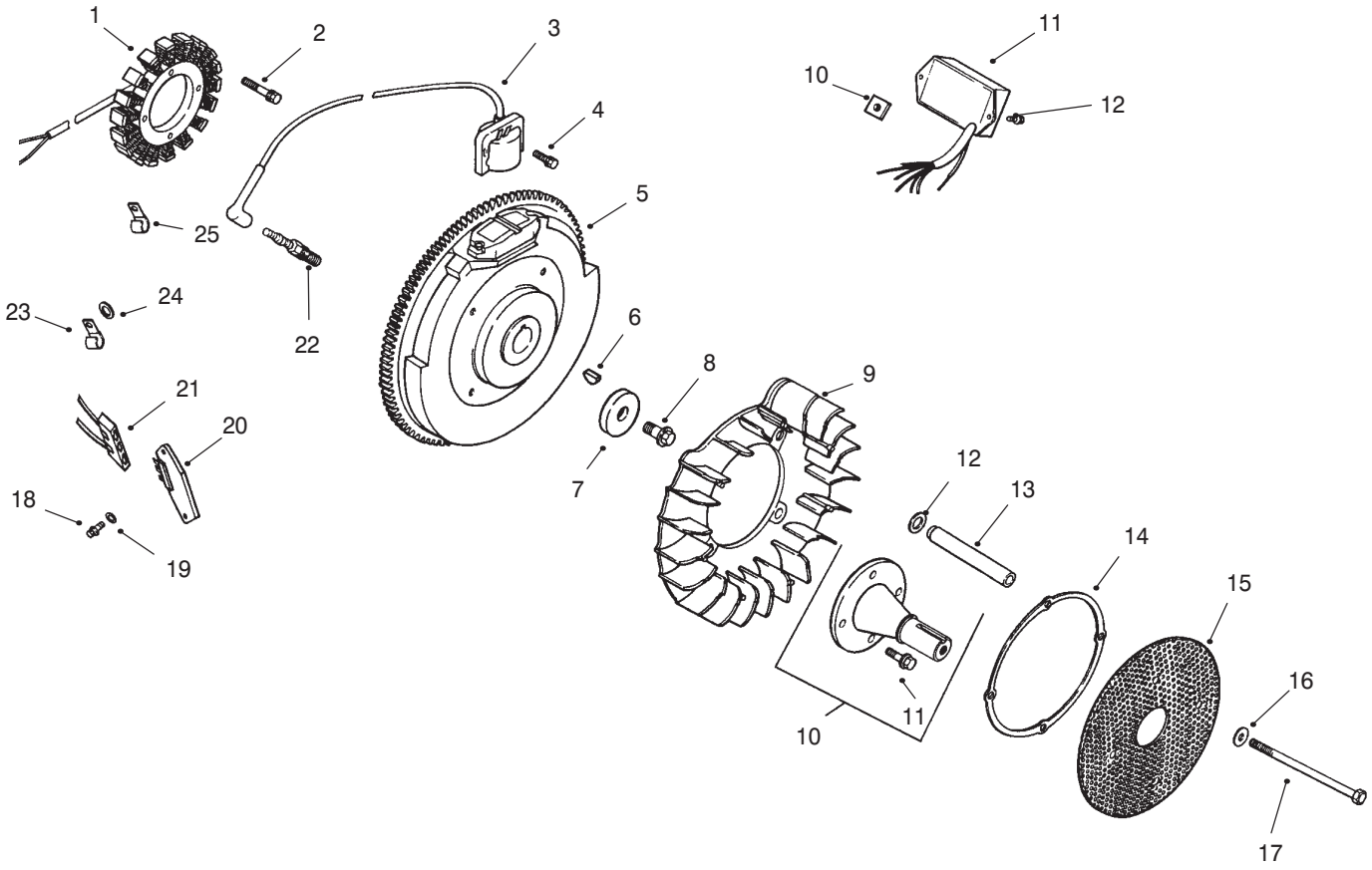

Group 5 – Ignition/Electrical (CH22S PS–76513 Kohler)

Ref. No.	Part No.	Qty.	Description
1	54 755 09	1	Kit, 15 amp stator (Incl. 24 126 71 bracket)
2	M–0548025	2	Screw, hex. cap
3	24 584 01	2	Module, ignition
4	M–0545020	4	Screw, hex. socket hd.
5	24 025 11	1	Flywheel
6	X–42–15	1	Key
7	12 468 03	1	Washer, plain 3/8”
8	12 086 14	1	Screw, hex flange
9	24 157 03	1	Fan
10	24 755 08	1	Kit, front drive shaft (Includes 14)
11	M–0839025	4	Screw, hex flange
12	24 468 11	4	Washer, spring 10mm
13	24 112 14	4	Spacer
14	24 141 06	1	Ring, support
15	24 162 22	1	Screen, grass
16	X–25–53	4	Washer, plain 1/4”
17	M–0603100	4	Screw, hex
18	24 086 18	2	Screw, phillips hd.
19	X–25–92	2	Washer, plain 3/16
20	25 403 03	1	Rectifier–regulator, 15 amp
21	236602	1	Connector
22	12 132 06	2	Spark Plug

Ref. No.	Part No.	Qty.	Description
23	48 154 02	1	Clip, cable
24	X–25–63	1	Washer, plain 1/4”
25	235173	1	Clip, cable
			Not Illustrated
	25 518 28	1	Lead, black, (4” – 18 gauge – insulated grip barrel eyelet terminals)
	24 176 07	1	Harness, wiring
	24 126 71	1	Bracket, stator wire
	X–22–11	1	Washer, lock

Obtain Parts From Kohler

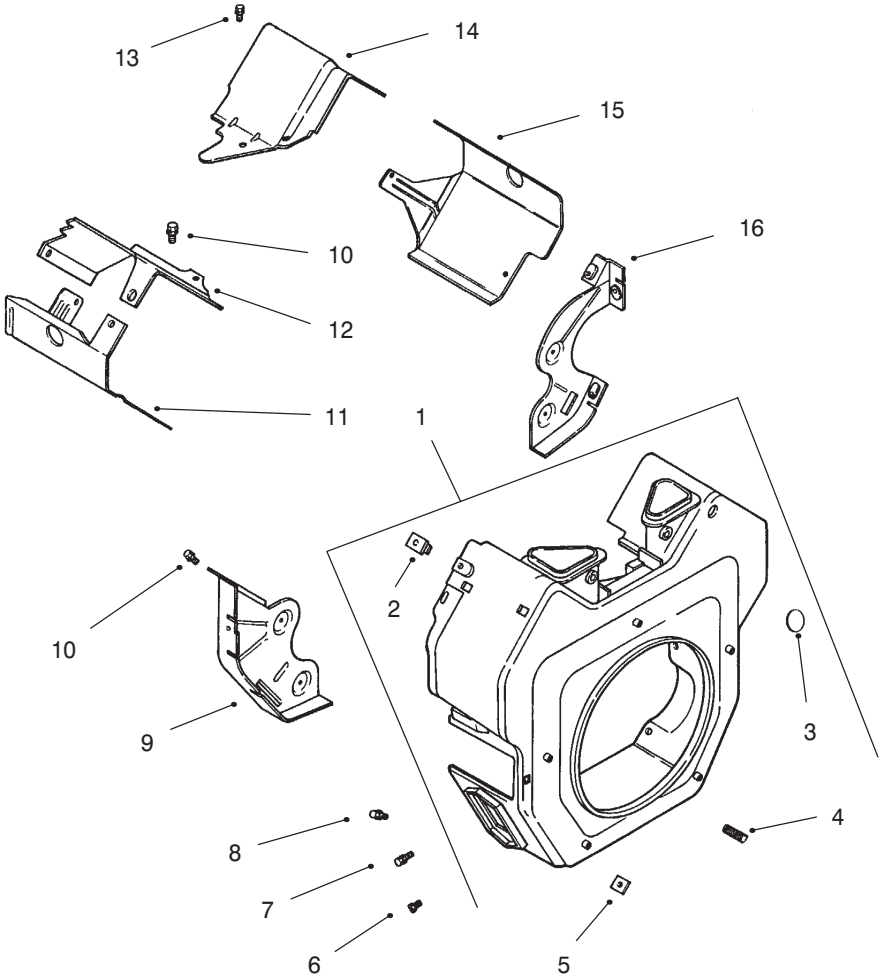

Sheet No.:
T–xxxx

Group 6 – Blower Housing & Baffles (CH22S PS–76513 Kohler)

Ref. No.	Part No.	Qty.	Description
1	24 027 83	1	Housing, blower (Includes 2–5)
2	24 100 02	2	Nut, plastic
3	24 755 90	1	Kit, access hole plug
4	25 086 43	1	Screw, set
5	24 100 01	2	Nut, plastic
6	M–0551016	1	Screw, hex. flange
7	M–0545016	5	Screw, hex. flange
8	M–0567020	2	Screw, hex. flange
9	24 146 02	1	Plate, backing – #2 side
10	M–0645016	6	Screw, hex. flange
11	24 063 20	1	Baffle, cyl. barrel–#2 side
12	24 063 17	1	Baffle, valley – #2 side
13	M–0545010	2	Screw, hex. flange
14	24 063 24	1	Baffle, valley – #1 side
15	24 063 30	1	Baffle, cyl. barrel–#1 side
16	24 146 08	1	Plate, backing – #1 side
	24 113 62	1	Decal, HP

Ref. No.	Part No.	Qty.	Description

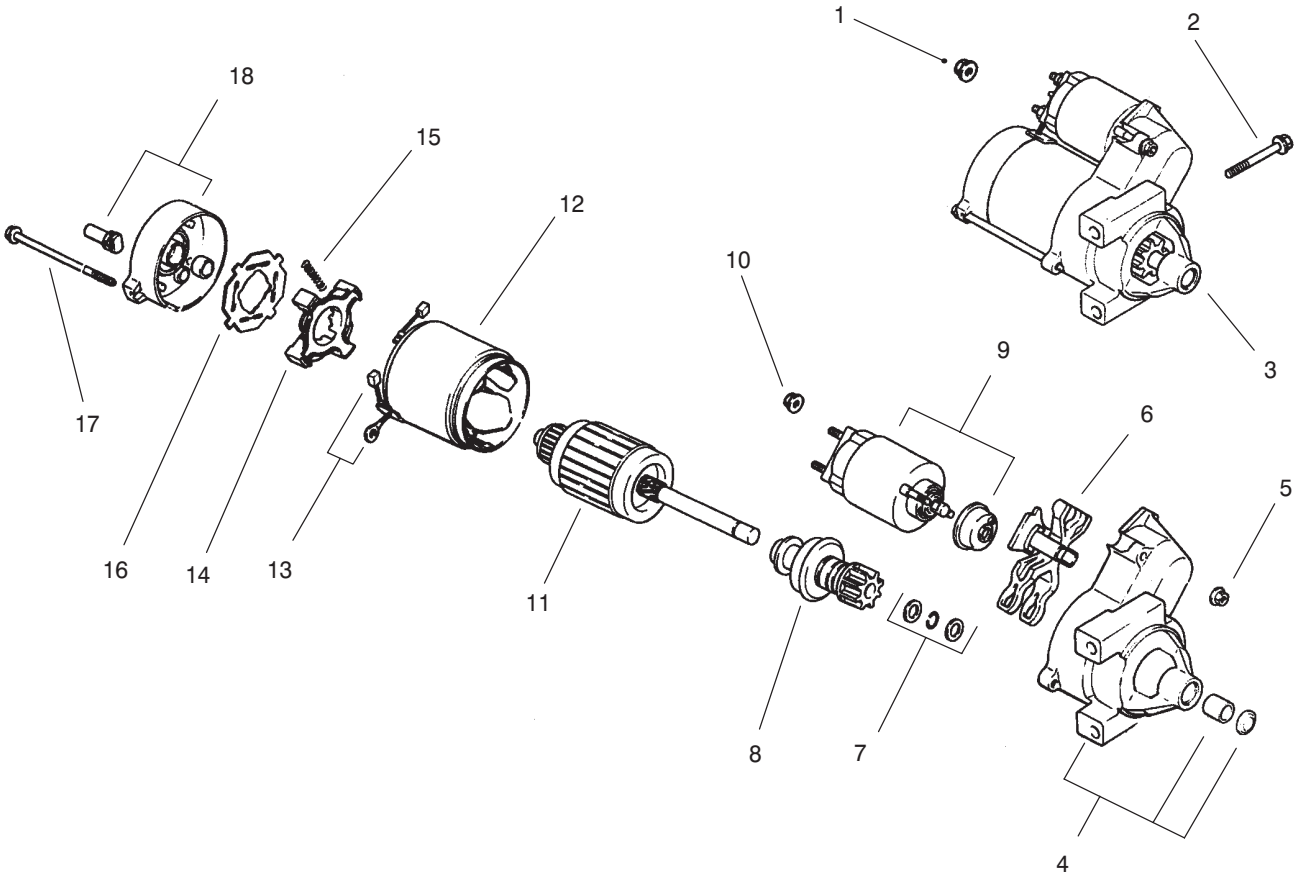

Group 7 – Starting System (CH22S PS–76513 Kohler)

Ref. No.	Part No.	Qty.	Description
1	M–0841080	1	Nut, hex flange
2	M–0839080	2	Screw, hex. flange
3	24 098 01	1	Starter, solenoid shift assembly (Incl. 4–18)
4	24 081 04	1	Drive, end cap
5	52 100 10	2	Nut, starter
6	12 090 10	1	Lever, starter drive
7	24 755 84	1	Kit, starter repair
8	12 239 01	1	Drive, pinion
9	52 435 02	1	Solenoid
10	52 100 09	1	Nut, starter
11	12 170 04	1	Armature, starter
12	12 471 01	1	Frame
13	52 221 01	1	Kit, brush & spring (Includes 15)
14	52 323 03	1	Holder, brush
15	52 089 09	4	Spring, brush
16	52 168 01	1	Insulator
17	52 211 05	2	Bolt, thru
18	24 301 01	1	Commutator, end cap

Ref. No.	Part No.	Qty.	Description

Obtain Parts From Kohler

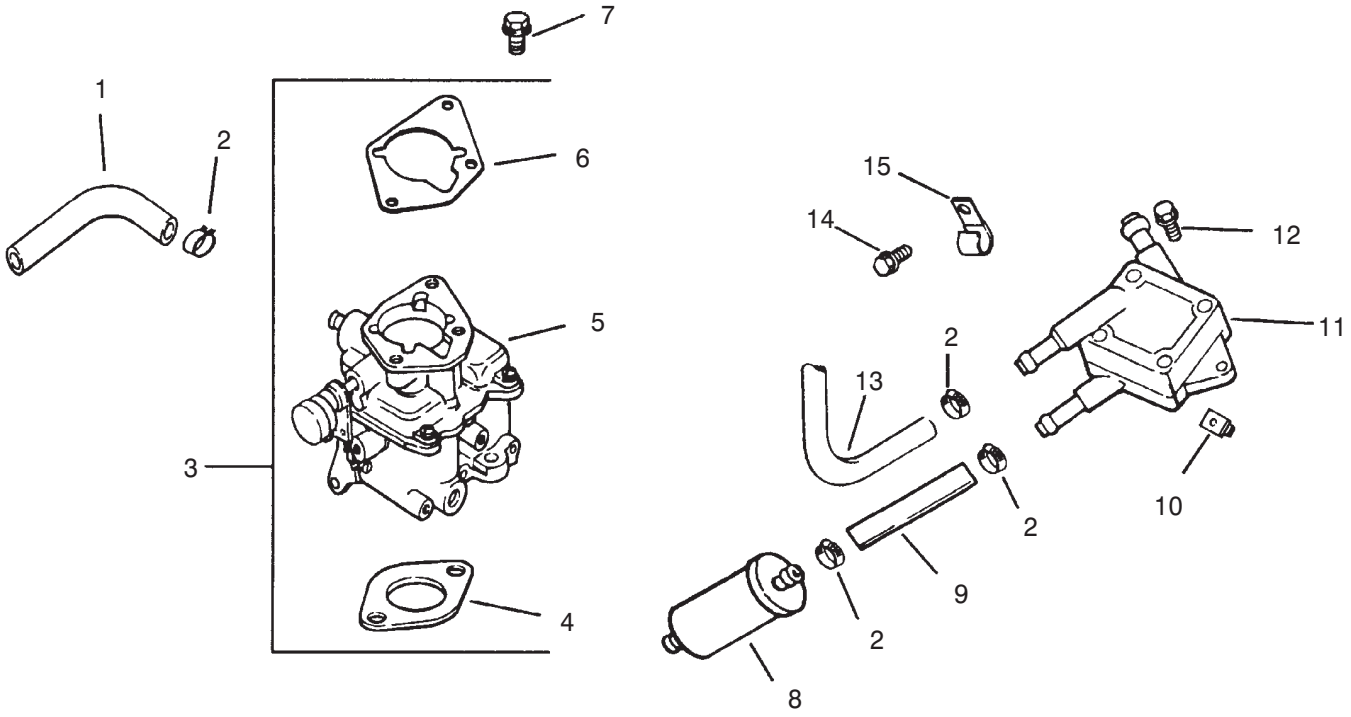

Group 8 – Fuel System (CH22S PS–76513 Kohler)

Ref. No.	Part No.	Qty.	Description
1	25 353 10	2	Line, fuel – 9”
2	X–426–9	6	Clamp, hose
3	24 853 34	1	Kit, carburetor w/gasket (Includes 4–6)
4	24 041 06	1	Gasket, air cleaner base
*5	24 053 34	1	Carburetor assembly
6	24 041 17	1	Gasket, carburetor
7	M–0651030	2	Screw, hex. flange
8	24 050 02	1	Filter, fuel
9	25 353 15	1	Line, fuel
10	24 100 01	2	Nut, plastic
11	24 393 04	1	Pump, fuel–pulse
12	24 086 12	2	Screw, hex
13	24 353 02	1	Line, fuel 15–1/2”
14	M–0650012	1	Screw, hex flange
15	47 154 01	1	Clip, cable

Ref. No.	Part No.	Qty.	Description

Obtain Parts From Kohler
*For Information Only – Not Available Separately

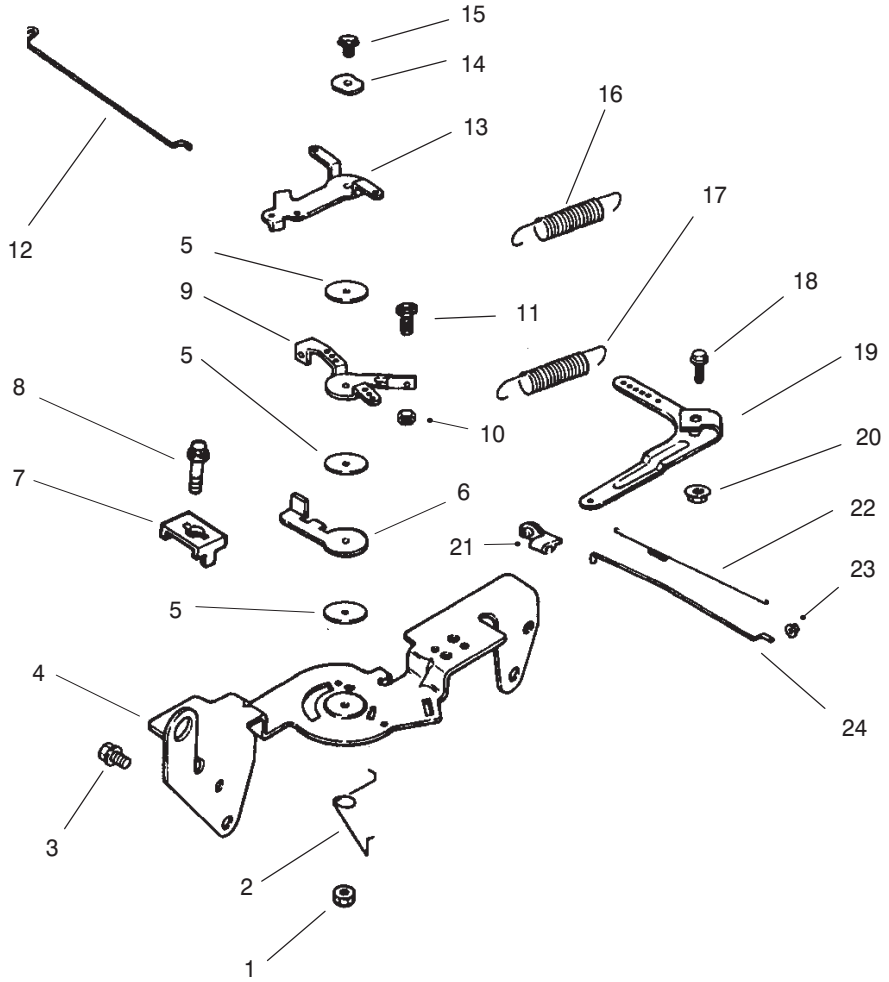

Group 9 – Engine Controls (CH22S PS–76513 Kohler)

Ref. No.	Part No.	Qty.	Description
1	M–0547050	1	Nut, hex. lock
2	24 089 03	1	Spring, choke return
3	M–0645016	4	Screw, hex. flange
4	24 126 56	1	Bracket, control
5	24 468 01	3	Washer, plain
6	24 090 07	1	Lever, throttle actuator
7	12 237 01	2	Clamp, cable
8	M–0545016	2	Screw, hex. flange
9	24 090 03	1	Lever, throttle control
10	M–0446030	1	Nut, hex
11	M–0401030	1	Screw, hex. cap
12	24 079 02	1	Linkage, choke
13	24 090 05	1	Lever, choke
14	41 468 03	1	Washer, spring
15	M–0545020	1	Screw, hex. flange
16	24 089 38	1	Spring, throttle limiter
17	24 089 15	1	Spring, governor
18	SM–0642025	1	Screw, hex. flange
19	24 090 14	1	Lever, governor
20	M–0641060	1	Nut, hex. flange
21	25 158 11	1	Bushing, linkage retaining
22	24 089 01	1	Spring, linkage
23	25 158 08	1	Bushing, linkage retaining

Ref. No.	Part No.	Qty.	Description
24	24 079 01	1	Linkage, throttle

Obtain Parts From Kohler

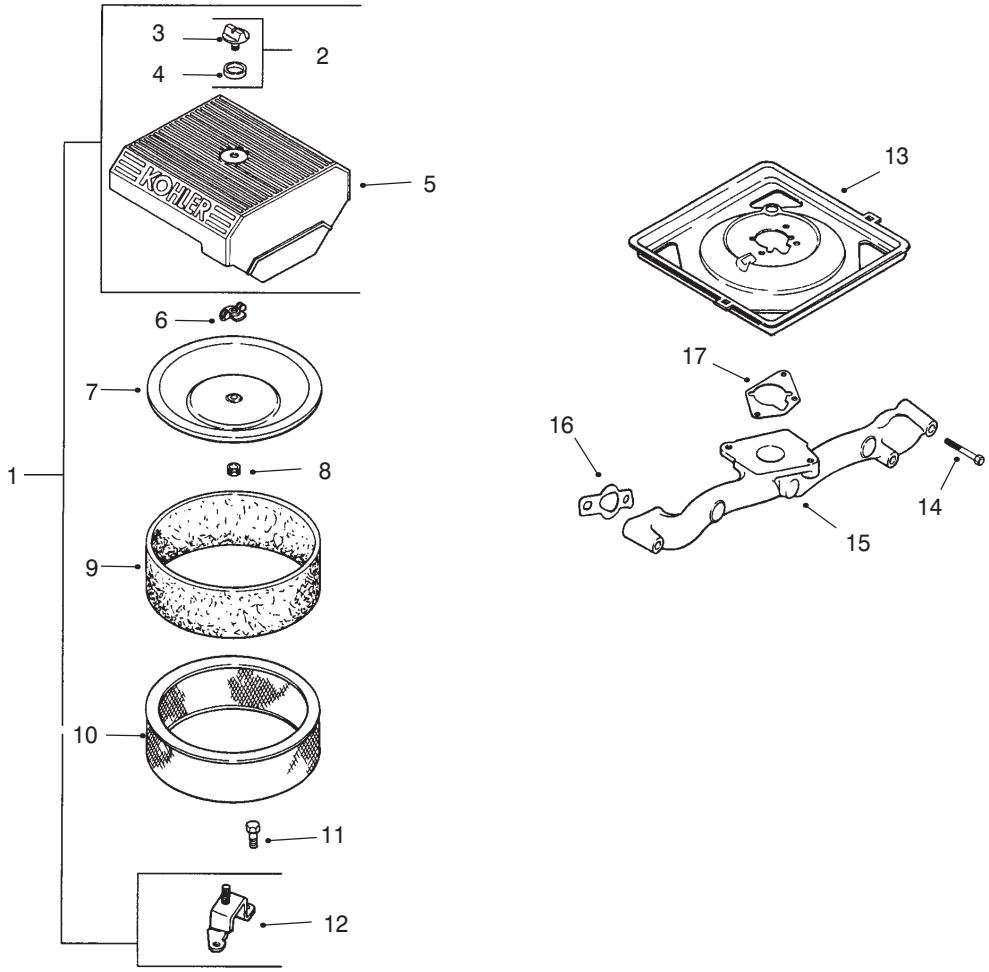

Group 10 – Air Intake/Filtration (CH22S PS–76513 Kohler)

Ref. No.	Part No.	Qty.	Description
1	24 753 05	1	Kit, air cleaner (Includes 2–5, 12)
2	54 755 01	1	Kit, air cleaner knob (Includes 3,4)
3	25 341 03	1	Knob, cover
4	24 153 15	1	O–Ring
5	24 096 24	1	Cover, air cleaner
6	12 100 01	2	Wing Nut
7	24 096 01	1	Cover, inner air cleaner
8	230046	1	Seal, inner air cleaner
9	24 083 05	1	Precleaner, element
10	24 083 03	1	Element, air cleaner
11	M–0645016	3	Screw, hex flange
12	24 126 43	1	Bracket, air cleaner base
13	24 094 11	1	Base, air cleaner
14	M–0651055	4	Screw, hex flange
15	24 164 14	1	Manifold, intake
16	24 041 01	2	Gasket, intake manifold
17	24 041 06	1	Gasket, air cleaner base

Ref. No.	Part No.	Qty.	Description

Obtain Parts From Kohler

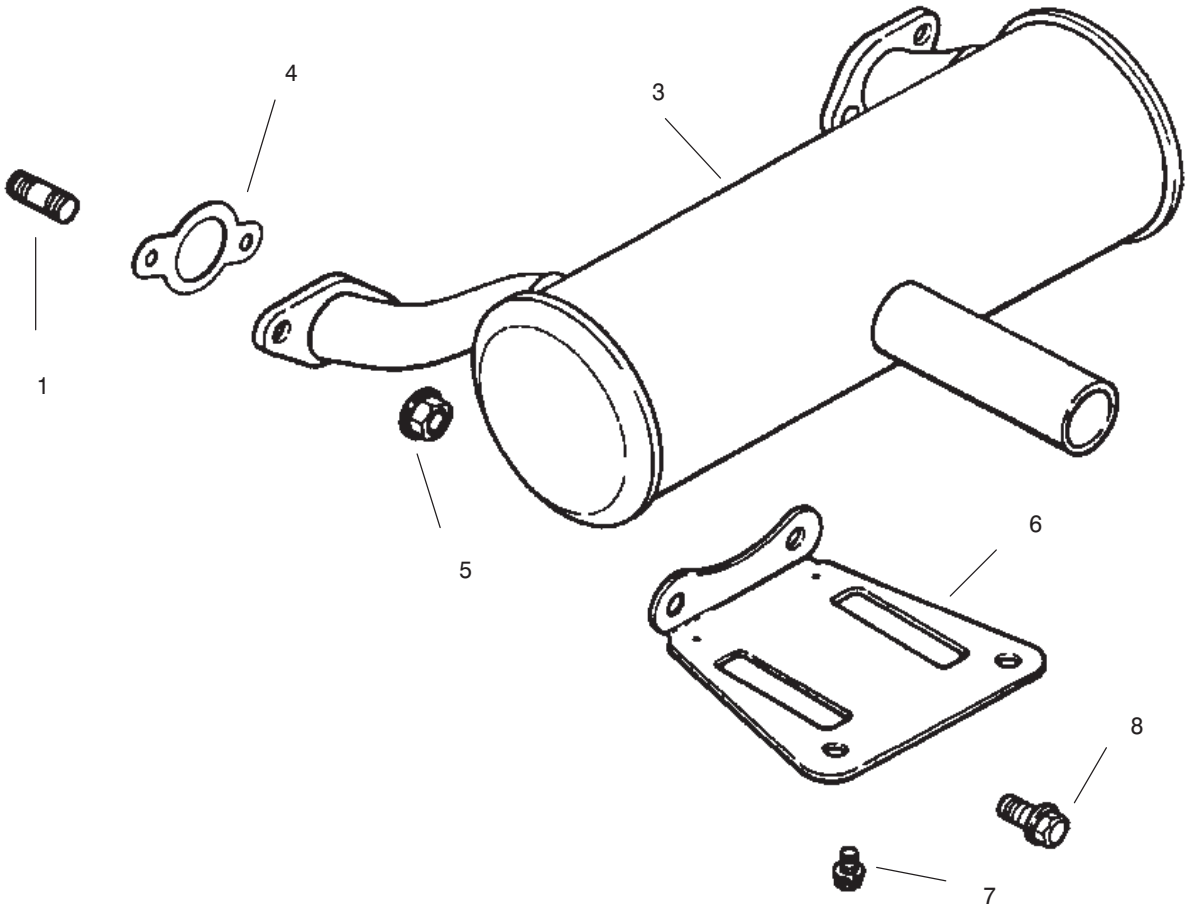

Group 11 – Exhaust (CH22S PS–76513 Kohler)

Ref. No.	Part No.	Qty.	Description
1	25 072 04	4	Stud
3	24 068 17	1	Muffler Canister – Center Outlet
4	24 041 02	2	Gasket, exhaust
5	M–0841080	4	Nut, hex flange
6	24 126 12	1	Bracket, muffler
7	M–0650012	4	Screw, hex. flange
8	M–0839020	2	Screw

Ref. No.	Part No.	Qty.	Description

Obtain Parts From Kohler

Maintenance Record

Date								

TORO®