Form No. 3324–984

# Z253

## Z–Master® with 62” Side Discharge Mower

**Model No. 74225—210000001 and Up**

# Parts Catalog

### Ordering Replacement Parts

To order replacement parts, please supply: the part number, the quantity, and the description of each part desired.

### Understanding Reference Numbers

Each identified part in an illustration has a reference number. The reference number for a part also appears in the parts list, along with other information about the part.

This catalog uses two special reference number formats, one to indicate parts in a service assembly and another to indicate the quantity of a given part in an illustration.

#### Service Assembly Reference Numbers

Parts in service assemblies have reference numbers in the form **a:b.** The **a** represents the reference number of the entire service assembly and the **b** represents a sequential number unique to each part within the service assembly.

For example, a wheel assembly might be identified by reference number **6**, the tire by **6:1**, the valve by **6:2**, and the wheel by **6:3**. When you order the assembly identified by reference number 6, you receive all parts identified by reference numbers 6:1, 6:2, and 6:3. However, you may also order any part individually.

Reference numbers of this type appear in illustrations and in part lists.

#### Reference Numbers Indicating Quantity

In an illustration, if a reference number indicates more than one part, the reference number has the form **nX y.** The **n** represents the quantity of the part, the **X** is the multiplication symbol, and the **y** represents the reference number.

For example, in an illustration, the reference number **2X 37** means that two of the parts identified by reference number 37 are indicated.

© The TORO Company — 2000
All Rights Reserved

## Contents


| Description | Page |
|---|---|
| Front Frame Assembly | 3 |
| Caster and Wheel Assembly | 4 |
| Rear Frame and Wheel Assembly | 5 |
| Brake and Wheel Hub Assembly | 6 |
| Control Panel Assembly | 7 |
| Hydraulic System Assembly | 8 |
| Tank and Fuel Lines Assembly | 10 |
| Shields and Clutch Assembly | 11 |
| Idler Assembly | 13 |
| Electrical System Assembly | 14 |
| Frame and Deck Assembly | 15 |
| Deck, Deflector and Roller Assembly | 16 |
| Spindle and Pulley Assembly | 17 |
| Belts and Idler Arm Assembly | 18 |
| Stand Assembly | 19 |
| Group 1 – Crankshaft (CH22S PS–76513 Kohler) | 20 |
| Group 2 – Crankcase (CH22S PS–76513 Kohler) | 21 |
| Group 3 – Oil Pan/Lubrication (CH22S PS–76513 Kohler) | 22 |
| Group 4 – Head/Valve/Breather (CH22S PS–76513 Kohler) | 23 |
| Group 5 – Ignition/Electrical (CH22S PS–76513 Kohler) | 24 |
| Group 6 – Blower Housing & Baffles (CH22S PS–76513 Kohler) | 25 |
| Group 7 – Starting System (CH22S PS–76513 Kohler) | 26 |
| Group 8 – Fuel System (CH22S PS–76513 Kohler) | 27 |
| Group 9 – Engine Controls (CH22S PS–76513 Kohler) | 28 |
| Group 10 – Air Intake/Filtration (CH22S PS–76513 Kohler) | 29 |
| Group 11 – Exhaust (CH22S PS–76513 Kohler) | 30 |


## Accessories

| Description | Model / Part No. |
|---|---|
| Deck Lift Assist Kit | 78473 |
| Roll–Over Protection System | 78480 |
| Hitch Kit | 99–8925 |
| Atomic Blade Assembly | 104–1303 |
| 62”/72” Stripping Kit | 30163 |

## Part Description Abbreviations

Part descriptions in this catalog may include the following abbreviations.

| Abbreviation | Meaning |
|---|---|
| AR | as required |
| ASM | assembly |
| CARR | carriage |
| DEG | degrees |
| FH | flat head |
| GA | gauge |
| HF | hex flange |
| HH | hex head |
| HHF | hex head flange |
| HLH | hex lag head |
| HJ | hex jam |
| HOC | height-of-cut |
| HS | hex socket |
| HSBH | hex socket button head |
| HSFH | hex socket flat head |
| HSH | hex socket head |
| HWH | hex washer head |
| HWHTF | hex washer head thread forming |
| INC | incorporated |
| LH | left hand |
| NI | nylon insert |
| PPH | Phillips pan head |
| PTH | Phillips truss head |
| PTO | power take off |
| RH | right hand |
| SFH | slotted fillister head |
| SHH | slotted hex head |
| SQH | square head |
| SHWH | slotted hex washer head |
| SPH | slotted pan head |
| SRH | slotted round head |
| STD | standard |
| TAP | self tapping |
| TTH | Torx truss head |
| WH | wing head |

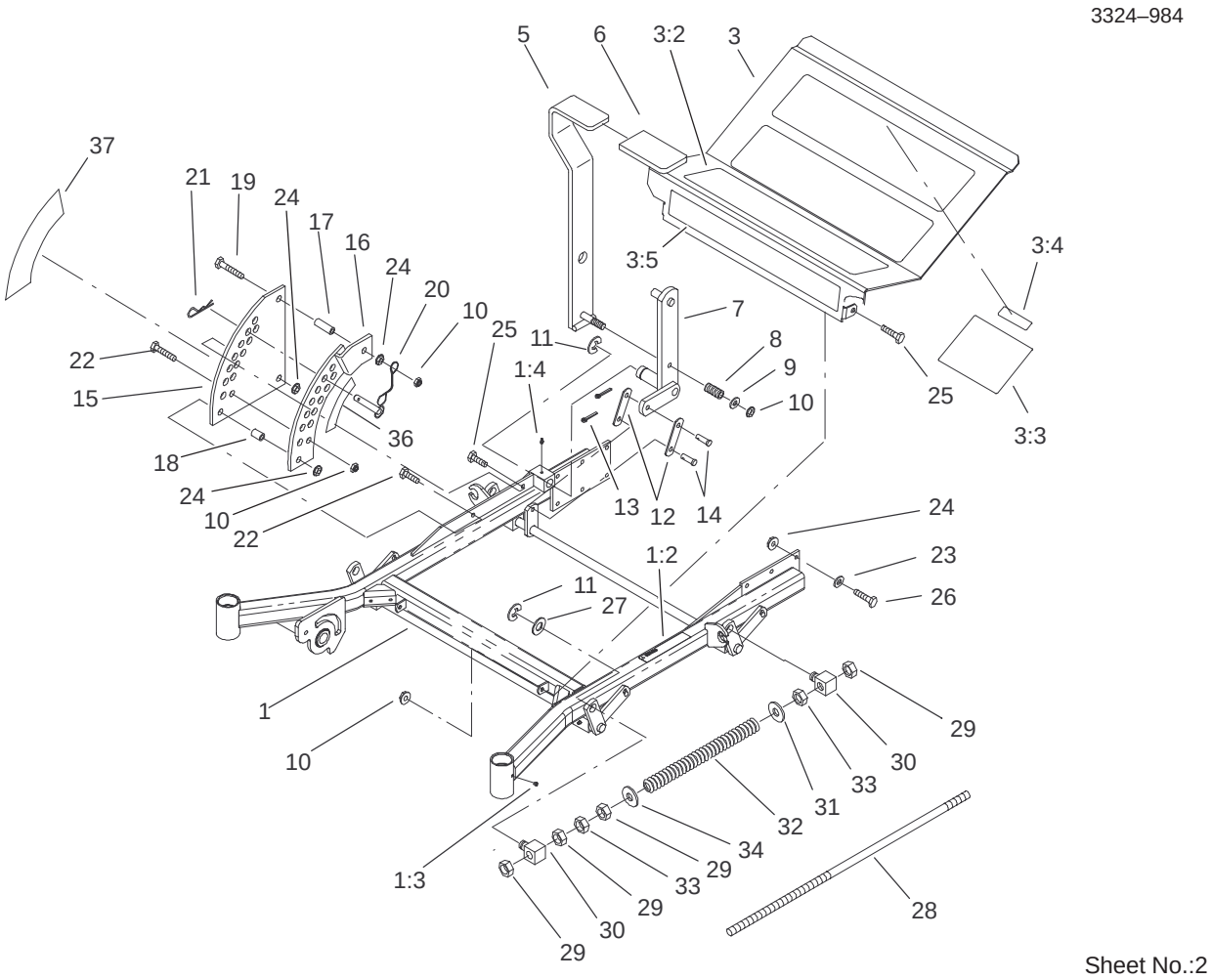


Sheet No.:2

# Front Frame Assembly

| Ref. No. | Part No. | Qty. | Description |
|---|---|---|---|
| 1 | 104–5132 | 1 | Frame ASM |
| 1:2 | 1–633818 | 1 | Decal–Warning |
| 1:3 | 1–811010 | 2 | Plug |
| 1:4 | 302–19 | 5 | Fitting–Grease |
| 3 | 100–6509 | 1 | Floorpan ASM |
| 3:2 | 1–633553 | 3 | Pad–Antiskid |
| 3:3 | 1–633766 | 1 | Decal–Check |
| 3:4 | 98–5954 | 1 | Decal–Missing, Cover |
| 3:5 | 1–633737 | 1 | Decal–Z–Master |
| 5 | 1–632324–03 | 1 | Lever–Lift |
| 6 | 1–633295 | 1 | Grip–Lever, Lift |
| 7 | 1–632219–03 | 1 | Arm–Lift, Deck |
| 8 | 1–633325 | 1 | Spring–Compression |
| 9 | 3256–24 | 1 | Washer–Flat |
| 10 | 3296–39 | 5 | Nut–Lock, NI |
| 11 | 32151–103 | 5 | Ring–Snap |
| 12 | 1–633068 | 2 | Arm–Lift, Deck |
| 13 | 3272–10 | 2 | Pin–Cotter |
| 14 | 283–2 | 2 | Pin–Clevis |
| 15 | 1–633889–01 | 1 | Plate–Lift, Deck |
| 16 | 1–632899–01 | 1 | Plate–Lift, Deck |
| 17 | 1–633082 | 1 | Bushing–Lever, Lift |
| 18 | 1–633080 | 1 | Bushing–Lever, Lift |
| 19 | 323–13 | 1 | Screw–HH |
| 20 | 1–633097 | 1 | Pin–Hitch w/Lanyard |
| 21 | 1–806005 | 1 | Pin–Hair |

| Ref. No. | Part No. | Qty. | Description |
|---|---|---|---|
| 22 | 323–9 | 2 | Screw–HH |
| 23 | 98–5975 | 12 | Washer–Belleville |
| 24 | 3290–357 | 15 | Nut–Flange, Lock |
| 25 | 323–6 | 3 | Screw–HH |
| 26 | 323–7 | 12 | Screw–HH |
| 27 | 3256–29 | 4 | Washer–Flat |
| 28 | 1–633096 | 2 | Rod–Lift, Deck |
| 29 | 3217–11 | 8 | Nut–Hex |
| 30 | 1–633441 | 4 | Swivel–Deck Mount, Rear |
| 31 | 3256–7 | 2 | Washer–Flat |
| 32 | 1–633064 | 2 | Spring–Support, Deck |
| 33 | 3218–6 | 4 | Nut–Jam |
| 34 | 3256–7 | 2 | Washer–Flat |
| 36 | 1–633706 | 1 | Decal–Height, Deck |
| 37 | 1–633345 | 1 | Decal–Height, Deck |

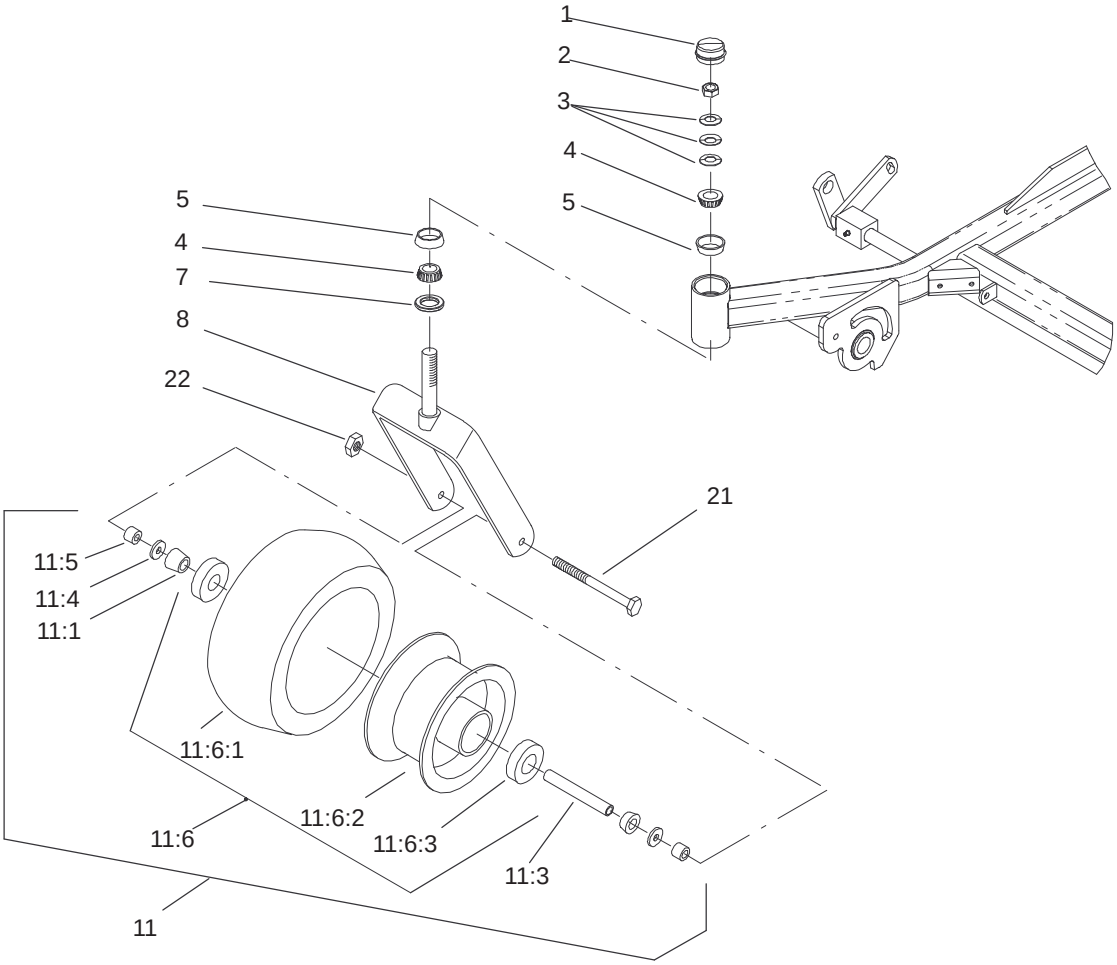


Sheet No.:3

# Caster and Wheel Assembly

| Ref. No. | Part No. | Qty. | Description |
|---|---|---|---|
| 1 | 1–543513 | 2 | Cap–Grease |
| 2 | 3296–51 | 2 | Nut–Lock, NI |
| 3 | 1–633508 | 6 | Washer–Bellville |
| 4 | 254–94 | 4 | Bearing–Taper/Cone |
| 5 | 254–72 | 4 | Bearing–Taper/Cup |
| 7 | 1–543511 | 2 | Seal–Grease |
| 8 | 1–642111–01 | 2 | Caster |
| 11 | 1–644251 | 2 | Caster Wheel ASM |
| 11:1 | 1–633585 | 2 | Bearing–Cone, Tapered |
| 11:3 | 1–633959 | 1 | Spacer–Caster, Front |
| 11:4 | 1–633580 | 2 | Seal–Bearing |
| 11:5 | 1–633581 | 2 | Spacer–Bearing |
| 11:6 | | 1 | Wheel & Tire ASM |
| 11:6:1 | 1–523009 | 1 | Tire |
| 11:6:2 | 1–633987 | 1 | Wheel |
| 11:6:3 | 1–633584 | 2 | Bearing–Cup |
| 21 | 325–24 | 2 | Screw–HH |
| 22 | 3296–45 | 2 | Nut–Lock, NI |

| Ref. No. | Part No. | Qty. | Description |
|---|---|---|---|
| | | | |

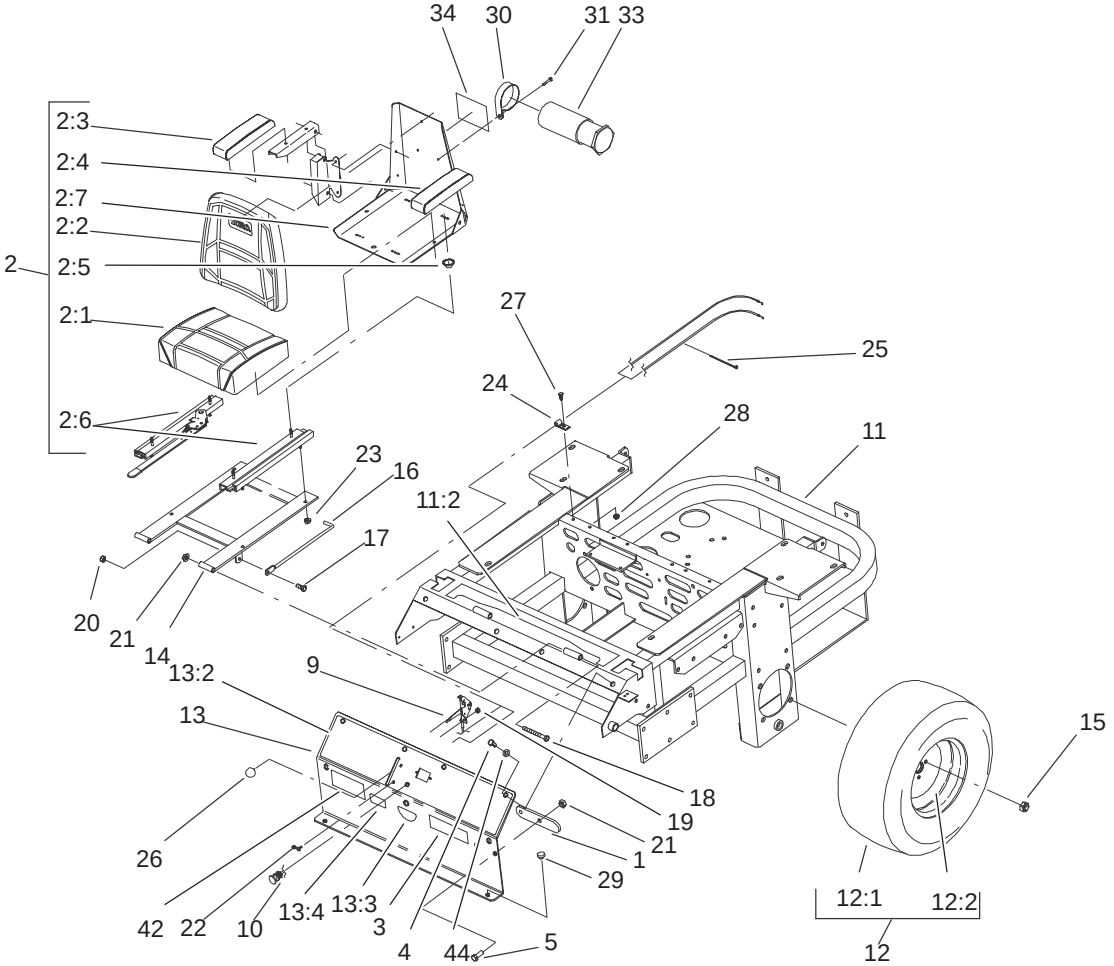


Sheet No.:4

# Rear Frame and Wheel Assembly

| Ref. No. | Part No. | Qty. | Description |
|---|---|---|---|
| 1 | 1–633964–03 | 1 | Stop–Brake, Park |
| 2 | 1–633705 | 1 | Seat w/Tracks |
| 2:1 | 103–0290 | 1 | Cushion–Bottom, Seat |
| 2:2 | 104–7754 | 1 | Cushion – Back, Seat |
| 2:3 | 1–633710 | 1 | Cushion–Armrest, RH |
| 2:4 | 1–633711 | 1 | Cushion–Armrest, LH |
| 2:5 | 1–543401 | 4 | Spacer–Track |
| 2:6 | 1–643255 | 1 | Track–Seat, 4” |
| 2:7 | 1–633859 | 1 | Frame–Seat |
| 4 | 322–3 | 6 | Screw–HH |
| 5 | 323–6 | 2 | Screw–HH |
| 9 | 1–633696 | 1 | Cable–Throttle |
| 10 | 1–603336 | 1 | Control–Choke |
| 11 | 100–4261 | 1 | Rear Frame ASM |
| 11:2 | 103–0245 | 1 | Decal–Console, Top |
| 12 | 1–633970 | 2 | Wheel & Tire ASM |
| 12:1 | 1–633993 | 1 | Tire |
| 12:2 | 1–633992 | 1 | Wheel |
| 13 | 99–4623 | 1 | Console ASM |
| 13:2 | 100–4311 | 1 | Decal–Panel, Control |
| 13:3 | 103–0262 | 1 | Decal–Valve, Fuel |
| 13:4 | 98–4387 | 1 | Decal–Protection, Ear |
| 14 | 1–632187–03 | 1 | Frame – Seat |
| 15 | 242–50 | 8 | Nut – Lug |
| 16 | 1–633293 | 1 | Rod–Holdup, Seat |
| 17 | 322–5 | 1 | Screw–HH |

| Ref. No. | Part No. | Qty. | Description |
|---|---|---|---|
| 18 | 323–21 | 2 | Screw–HH |
| 19 | 3296–2 | 2 | Nut–Lock |
| 20 | 3296–29 | 1 | Nut–Lock |
| 21 | 3296–39 | 4 | Nut–Lock, NI |
| 22 | 1–807513 | 2 | Bolt–CARR |
| 23 | 32128–20 | 4 | Nut–HF |
| 24 | 1–513762 | 1 | Clip–Loom |
| 25 | 1–303335 | 1 | Tie–Plastic |
| 26 | 1–513592 | 1 | Knob–Ball, Red |
| 27 | 321–4 | 1 | Screw–HH |
| 28 | 32128–33 | 1 | Nut–HF |
| 29 | 1–513658 | 2 | Bumper–Catcher, Grass |
| 30 | 2412–120 | 2 | R–Clamp |
| 31 | 32104–76 | 2 | Screw |
| 33 | 74–0720 | 1 | Tube–Manual |
| 34 | 99–4693 | 1 | Decal–Toro |
| 42 | 99–4628 | 1 | Decal–Z253 |
| 44 | 3256–23 | 6 | Washer–Flat |

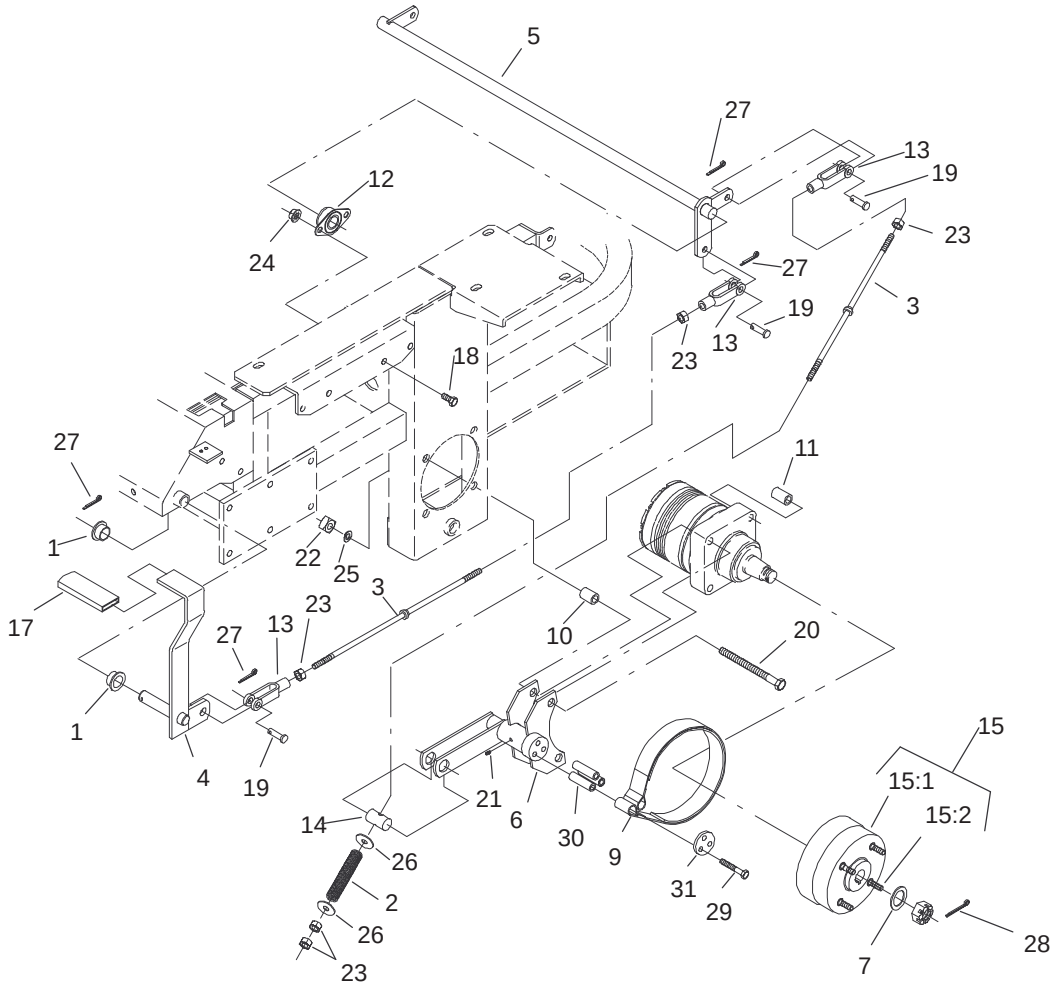


Sheet No.:5

# Brake and Wheel Hub Assembly

| Ref. No. | Part No. | Qty. | Description |
|---|---|---|---|
| 1 | 1–513140 | 2 | Bearing–Control |
| 2 | 1–633454 | 2 | Spring–Brake |
| 3 | 1–633477 | 3 | Rod–Brake |
| 4 | 1–634500 | 1 | Brake Lever/Grip ASM |
| 5 | 1–632217–03 | 1 | Shaft–Brake |
| 6 | 103–0352–03 | 2 | Bracket–Brake |
| 7 | 1–523157 | 2 | Washer–Spacer |
| 9 | 103–0355 | 2 | Band–Brake |
| 10 | 1–633380 | 4 | Spacer–Wheel, Short |
| 11 | 1–633382 | 4 | Spacer–Wheel, Long |
| 12 | 1–633102 | 2 | Bearing–Flange, Side |
| 13 | 1–633131 | 4 | Yoke–Linkage, Brake |
| 14 | 1–633144 | 2 | Pin–Trunion |
| 15 | 103–0590 | 2 | Hub–Wheel w/Studs |
| 15:1 | 103–0589 | 1 | Hub–Wheel |
| 15:2 | 1–633926 | 4 | Stud–Heel |
| 17 | 1–633268 | 1 | Grip–Lever, Brake |
| 18 | 323–4 | 4 | Screw–HH |
| 19 | 1–808285 | 4 | Pin–Clevis |
| 20 | 325–17 | 8 | Screw–HH |
| 21 | 1481 | 2 | Fitting–Grease |
| 22 | 103–0131 | 8 | Nut–Square |
| 23 | 3219–3 | 8 | Nut–HH |
| 24 | 3290–357 | 4 | Nut–Flange, Lock |
| 25 | 3253–7 | 8 | Washer–Lock |
| 26 | 3256–4 | 4 | Washer–Flat |

| Ref. No. | Part No. | Qty. | Description |
|---|---|---|---|
| 27 | 3272–10 | 7 | Pin–Cotter |
| 28 | 1–806800 | 2 | Pin–Cotter |
| 29 | 322–9 | 6 | Screw–HH |
| 30 | 103–0384 | 6 | Spacer |
| 31 | 103–0374 | 2 | Retainer–Band, Brake |

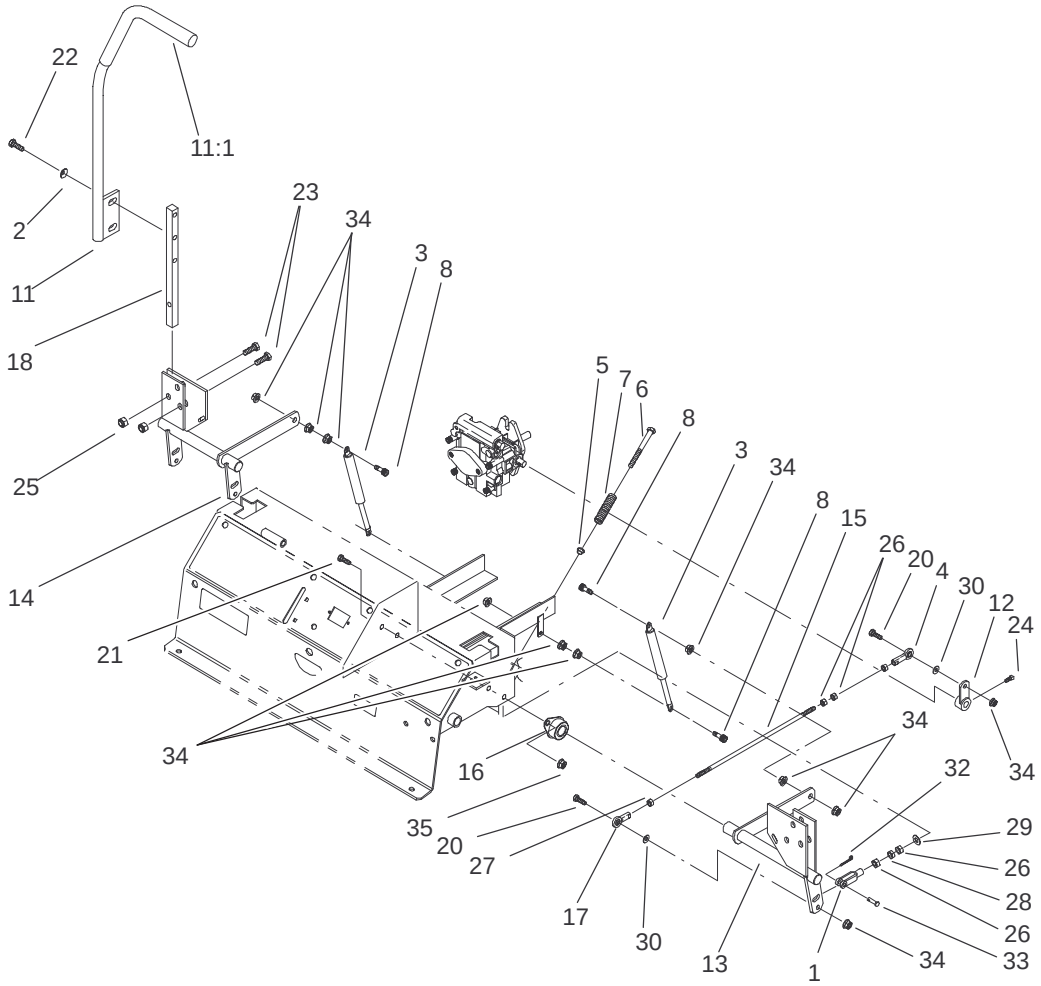


Sheet No.:6

# Control Panel Assembly

| Ref. No. | Part No. | Qty. | Description |
|---|---|---|---|
| 1 | 1–303105 | 2 | Yoke–Adjustable |
| 2 | 98–5975 | 4 | Washer–Belleville |
| 3 | 1–523027 | 2 | Damper–Control |
| 4 | 1–543017 | 2 | Balljoint–RH |
| 5 | 1–603735 | 2 | Bushing–Flanged, Nylon |
| 6 | 1–603737 | 2 | Bolt–Return, Neutral |
| 7 | 1–603807 | 2 | Spring–Return, Neutral |
| 8 | 1–403180 | 4 | Screw–HH |
| 11 | 103–0632 | 1 | RH Lever/Grip ASM |
| 11:1 | 1–633257 | 1 | Grip–Control, Motion |
| 12 | 1–632208–03 | 2 | Arm–Control, Pump |
| 13 | 1–642319 | 1 | Control–Motion, LH |
| 14 | 1–642320 | 1 | Control–Motion, RH |
| 15 | 1–633153 | 2 | Linkage–Pump/Lever |
| 16 | 1–633102 | 4 | Bearing–Flange, Side |
| 17 | 1–633152 | 2 | Balljoint–Thread, LH |
| 18 | 103–0407 | 2 | Arm–Shaft, Control |
| 20 | 322–6 | 4 | Screw–HH |
| 21 | 323–4 | 8 | Screw–HH |
| 22 | 323–6 | 4 | Screw–HH |
| 23 | 323–9 | 6 | Screw–HH |
| 24 | 1–803022 | 2 | Screw |
| 25 | 3296–39 | 6 | Nut–Lock, NI |
| 26 | 3219–2 | 10 | Nut–Hex |

| Ref. No. | Part No. | Qty. | Description |
|---|---|---|---|
| 27 | 3220–20 | 2 | Nut–Jam |
| 28 | 3220–2 | 2 | Nut |
| 29 | 3256–2 | 2 | Washer–Flat |
| 30 | 3256–3 | 4 | Washer–Flat |
| 32 | 3272–5 | 2 | Pin–Cotter |
| 33 | 1–808280 | 2 | Pin–Clevis |
| 34 | 32128–20 | 16 | Nut–HF |
| 35 | 3290–357 | 8 | Nut–Flange, Lock |
| *37 | 103–0631 | 1 | LH Lever/Grip ASM |

* Not illustrated

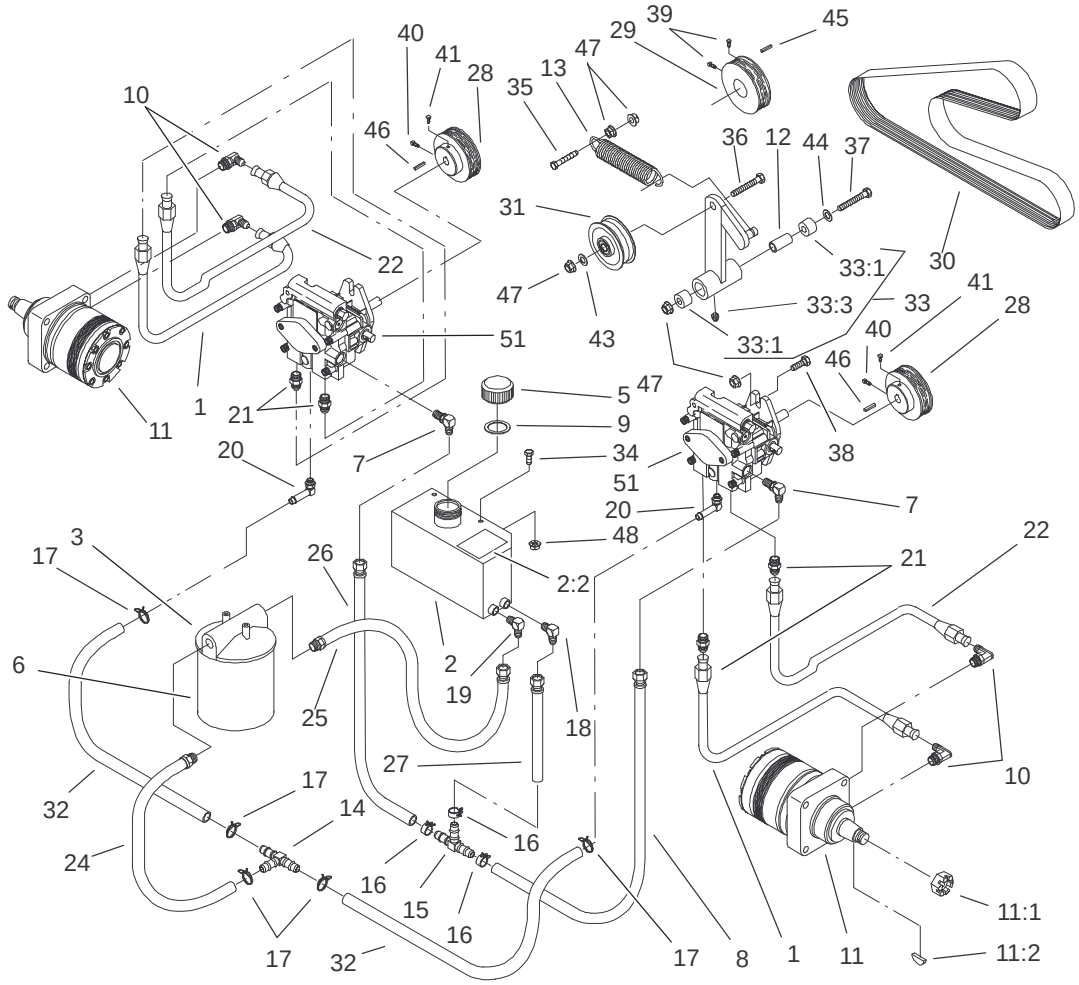


Sheet No.:7

# Hydraulic System Assembly

| Ref. No. | Part No. | Qty. | Description |
|---|---|---|---|
| 1 | 1–633774 | 2 | Hose–Upper |
| 2 | 99–4625 | 1 | Hydraulic Tank ASM |
| 2:2 | 1–523552 | 1 | Decal–Tank, Hydraulic |
| 3 | 1–513006 | 1 | Filter–Head |
| 5 | 1–513167 | 1 | Cap–Reservoir, Hydraulic |
| 6 | 1–633750 | 1 | Filter–Hydraulic |
| 6 | 1–633752 | 1 | Filter–Winter, Hydraulic |
| 7 | 1–513840 | 2 | Fitting–90° |
| 8 | 1–522217 | 1 | Low Pressure Hose ASM |
| 9 | 1–523103 | 1 | Gasket–Cap, Tank |
| 10 | 1–633786 | 4 | Fitting–90° |
| 11 | 1–523328 | 2 | Motor–Wheel |
| 11:1 | 1–809036 | 1 | Nut–HH |
| 11:2 | 1–807020 | 1 | Key–Woodruff |
| *11:99 | 1–000099 | 1 | Kit–Seal |
| *11:99 | 1–000139 | 1 | Kit–Bearing |
| 12 | 1–603384 | 1 | Bushing–Pivot, Idler |
| 13 | 1–603413 | 1 | Spring–Extension |
| 14 | 1–603721 | 1 | Fitting–Tee, Hose |
| 15 | 1–603722 | 1 | Fitting–Tee, Hose |
| 16 | 1–603826 | 3 | Clamp–Hose |
| 17 | 1–603827 | 5 | Clamp–Hose |
| 18 | 1–603987 | 1 | Fitting–Elbow |

| Ref. No. | Part No. | Qty. | Description |
|---|---|---|---|
| 19 | 1–603988 | 1 | Fitting–Elbow |
| 20 | 1–603989 | 2 | Fitting–Elbow |
| 21 | 1–603990 | 4 | Fitting–Straight |
| 22 | 1–633775 | 2 | Hose–Lower |
| 24 | 1–632281 | 1 | Hose ASM |
| 25 | 1–632282 | 1 | Hose ASM |
| 26 | 1–632285 | 1 | Hose ASM |
| 27 | 1–632286 | 1 | Hose ASM |
| 28 | 1–633568 | 2 | Sheave |
| 29 | 1–633567 | 1 | Sheave |
| 30 | 1–633749 | 1 | Belt–Drive, Pump |
| 31 | 1–633167 | 1 | Sheave–Idler |
| 32 | 1–633335 | 2 | Hose–Pressure, Low |
| 33 | 1–634277 | 1 | Bearing Arm ASM |
| 33:1 | 1–513034 | 2 | Sleeve–Bearing |
| 33:3 | 302–40 | 1 | Fitting–Grease |
| 34 | 321–4 | 2 | Screw–HH |
| 35 | 323–8 | 1 | Screw–HH |
| 36 | 323–9 | 1 | Screw–HH |
| 37 | 1–800805 | 1 | Screw–HH |
| 38 | 323–7 | 4 | Screw–HH |
| 39 | 1–803022 | 2 | Screw |
| 40 | 3242–6 | 2 | Screw–Set, SQH |
| 41 | 3242–4 | 2 | Screw–Set, SQH |
| 43 | 3256–3 | 1 | Washer–Flat |
| 44 | 3256–4 | 1 | Washer–Flat |

* Not illustrated

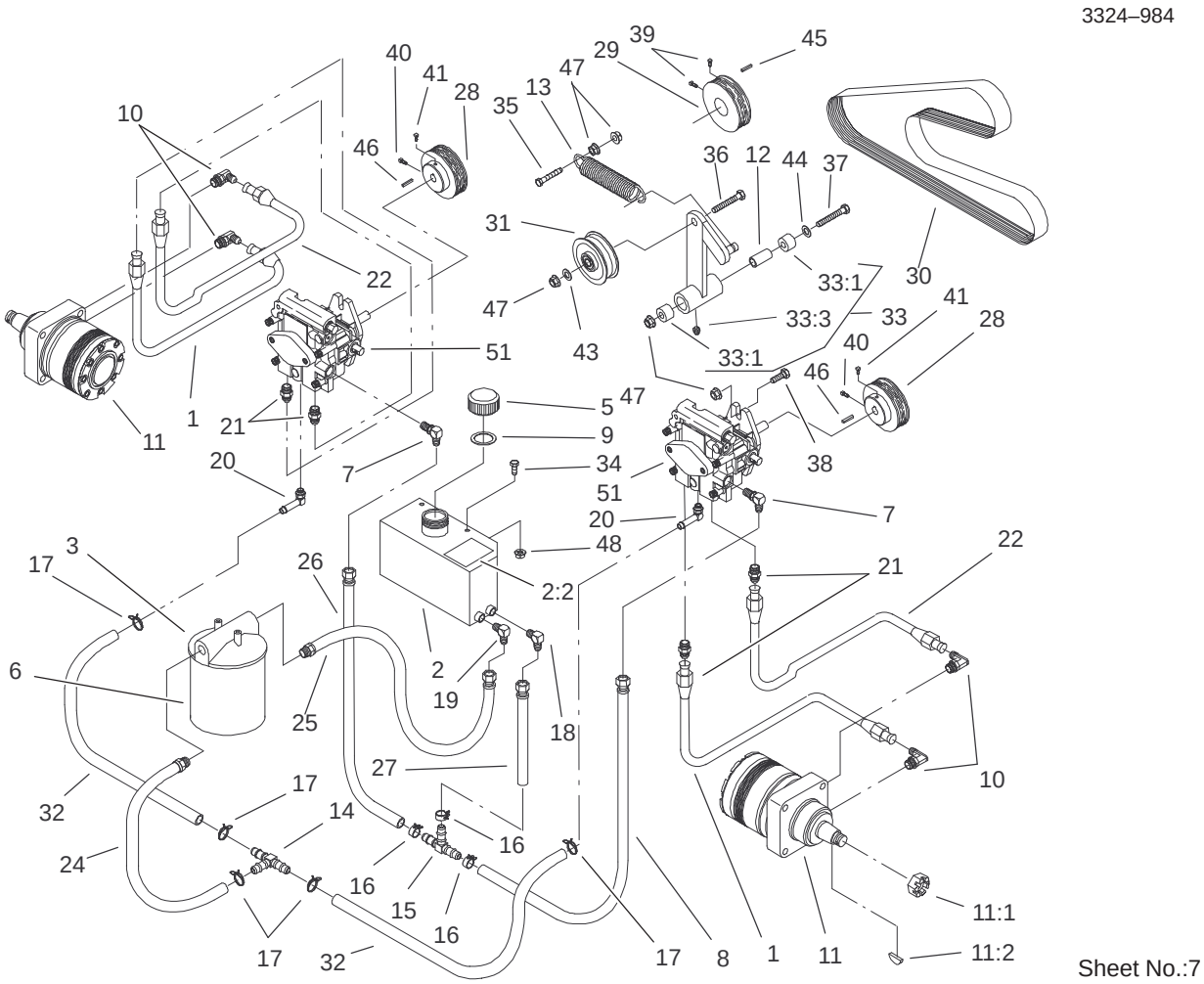


# Hydraulic System Assembly (Continued)

| Ref. No. | Part No. | Qty. | Description |
|---|---|---|---|
| 45 | 13–2840 | 1 | Key–Square |
| 46 | 1–807272 | 2 | Key–Machine |
| 47 | 3290–357 | 8 | Nut–Flange, Lock |
| 48 | 32128–33 | 2 | Nut–HF |
| 51 | 1–603841 | 2 | Pump–Hydraulic, RH |
| *51 | 80–6130 | 1 | Kit–Seal, Overhaul |

| Ref. No. | Part No. | Qty. | Description |
|---|---|---|---|
| | | | |

* Not illustrated

3324–984

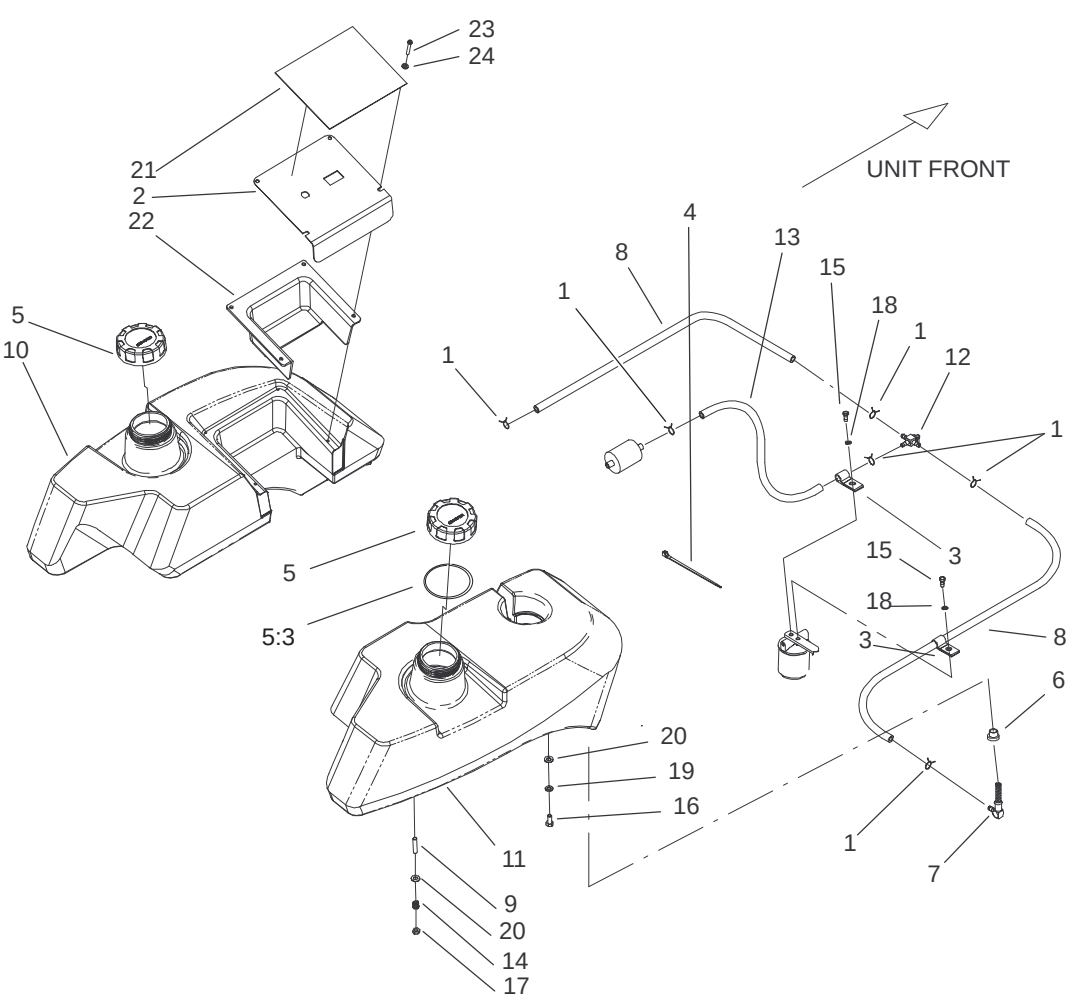


Sheet No.:8

# Tank and Fuel Lines Assembly

| Ref. No. | Part No. | Qty. | Description |
|---|---|---|---|
| 1 | 1–303077 | 6 | Clamp–Line, Fuel |
| 2 | 99–4656–03 | 1 | Panel–Control |
| 3 | 1–513762 | 2 | Clip–Loom |
| 4 | 1–303335 | 1 | Tie–Plastic |
| 5 | 88–3980 | 2 | Gas Cap ASM |
| 5:3 | 88–4010 | 1 | Gasket–Cap, Gas |
| 6 | 1–513645 | 2 | Bushing–Valve, Fuel |
| 7 | 1–543277 | 2 | Elbow–Tank, Fuel |
| 8 | 1–543456 | 2 | Hose–Fuel |
| 9 | 1–633023 | 6 | Stud |
| 10 | 104–5100 | 1 | Tank–Fuel, LH |
| 11 | 104–5101 | 1 | Tank–Fuel, RH |
| 12 | 1–633347 | 1 | Valve–Fuel |
| 13 | 103–0216 | 1 | Hose–Fuel |
| 14 | 1–633349 | 6 | Spring–Tank, Fuel |
| 15 | 321–3 | 2 | Screw–HH |
| 16 | 322–3 | 2 | Screw–HH |
| 17 | 3296–47 | 6 | Nut–Lock, NI |
| 18 | 3253–3 | 2 | Washer–Lock |
| 19 | 3253–4 | 2 | Washer–Lock |
| 20 | 3256–23 | 8 | Washer–Flat |
| 21 | 99–4632 | 1 | Decal–Panel, Control |
| 22 | 99–4940 | 1 | Shield–Panel, Control |
| 23 | 1–803071 | 4 | Screw |
| 24 | 1–303435 | 4 | Washer–Spring |

| Ref. No. | Part No. | Qty. | Description |
|---|---|---|---|
| | | | |

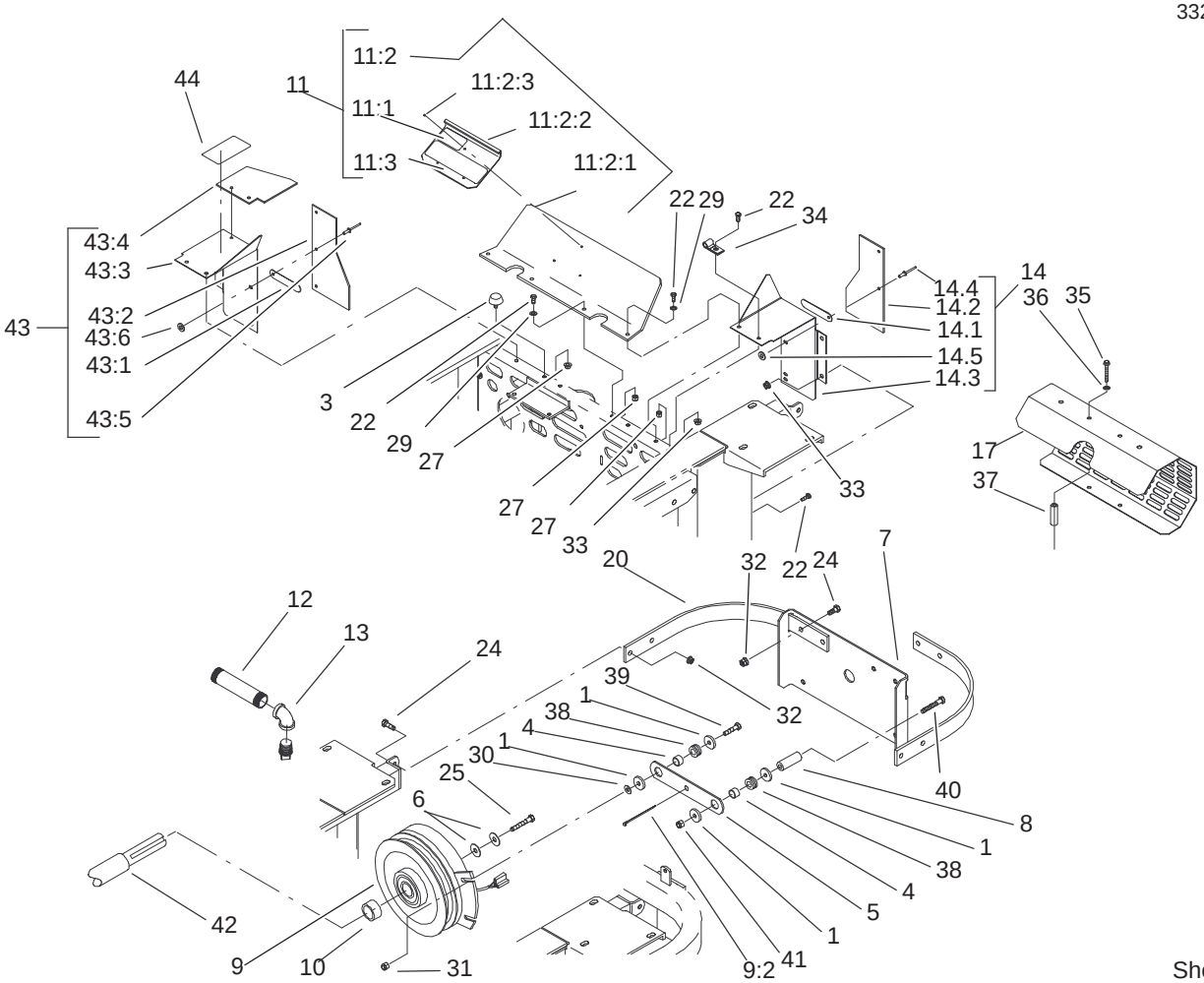


Sheet No.:9

# Shields and Clutch Assembly

| Ref. No. | Part No. | Qty. | Description |
|---|---|---|---|
| 1 | 1–613235 | 4 | Washer |
| 3 | 1–523420 | 2 | Bumper |
| 4 | 1–633545 | 2 | Spacer–Grommet |
| 5 | 1–633543–03 | 1 | Strap–Clutch, Brake |
| 6 | 1–603610 | 2 | Washer–Spring |
| 7 | 1–633615–03 | 1 | Guard–Clutch |
| 8 | 1–633988 | 1 | Spacer–Anchor, Clutch |
| 9 | 103–0662 | 1 | Clutch ASM |
| 10 | 1–633453 | 1 | Spacer,Clutch |
| 11 | 1–644276 | 1 | Shield ASM |
| 11:1 | 1–633462 | 1 | Decal–Important |
| 11:2 | 1–634308 | 1 | Shield/Lift ASM |
| 11:2:1 | 1–633298 | 1 | Shield–Engine |
| 11:2:2 | 1–633300–03 | 1 | Lift–Shield |
| 11:2:3 | 1–803035 | 3 | Rivet–Pop |
| 11:3 | 103–0368 | 1 | Decal–Devices, Rotating |
| 12 | 1–543232 | 1 | Nipple |
| 13 | 1–303428 | 1 | Elbow–90° |
| 14 | 1–634796 | 1 | LH Shield ASM |
| 14:1 | 1–523285 | 1 | Clip–Baffle, Rear |
| 14:2 | 1–633301 | 1 | Shield–Engine |
| 14:3 | 1–633795–03 | 1 | Baffle–Engine Shield, LH |
| 14:4 | 1–803035 | 3 | Rivet–Pop |

| Ref. No. | Part No. | Qty. | Description |
|---|---|---|---|
| 14:5 | 3256–63 | 3 | Washer–Flat |
| 17 | 1–643313–03 | 1 | Guard–Muffler |
| 20 | 1–643264–03 | 2 | Bracket–Guard, Top |
| 22 | 321–4 | 10 | Screw–HH |
| 24 | 323–6 | 6 | Screw–HH |
| 25 | 3212–10 | 1 | Screw–HH |
| 27 | 3296–42 | 6 | Nut–Lock NI |
| 29 | 3256–2 | 4 | Washer–Flat |
| 30 | 3256–3 | 1 | Washer–Flat |
| 31 | 32128–20 | 1 | Nut–HF |
| 32 | 3290–357 | 4 | Nut–Flange, Lock |
| 33 | 32128–33 | 5 | Nut–HF |
| 34 | 1–633396 | 1 | Clip–Loom |
| 35 | 1–809076 | 2 | Screw |
| 36 | 1–323235 | 2 | Washer–Spring |
| 37 | 1–323236 | 2 | Spacer |
| 38 | 1–633630 | 2 | Grommet–Brake |
| 39 | 322–6 | 1 | Screw–HH |
| 40 | 322–19 | 1 | Screw–HH |
| 41 | 3296–29 | 1 | Nut–Lock |
| 42 | 1–643026 | 1 | Engine–Kohler, 23hp |
| 43 | 1–644316 | 1 | RH Shield ASM |
| 43:1 | 1–523285 | 1 | Clip–Baffle, Rear |
| 43:2 | 1–633301 | 1 | Shield–Engine |
| 43:3 | 1–633794–03 | 1 | Baffle–Engine Shield, RH |

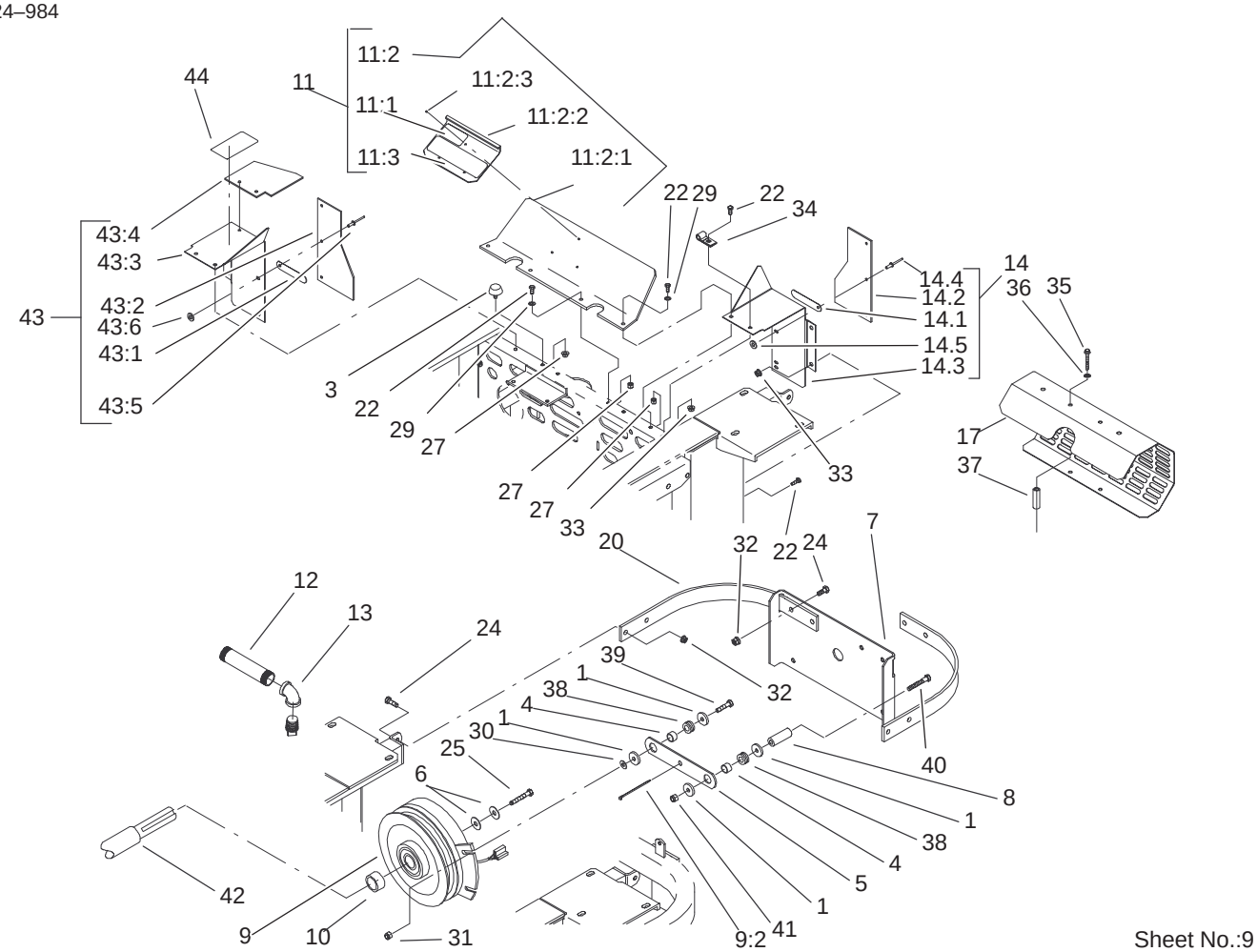


Sheet No.:9

# Shields and Clutch Assembly (Continued)

| Ref. No. | Part No. | Qty. | Description |
|---|---|---|---|
| 43:4 | 1–643315 | 1 | Baffle–Cooler, Engine |
| 43:5 | 1–803035 | 5 | Rivet–Pop |
| 43:6 | 3256–63 | 5 | Washer–Flat |
| 44 | 1–643339 | 1 | Decal–Routing, Belt |

| Ref. No. | Part No. | Qty. | Description |
|---|---|---|---|

3324–984

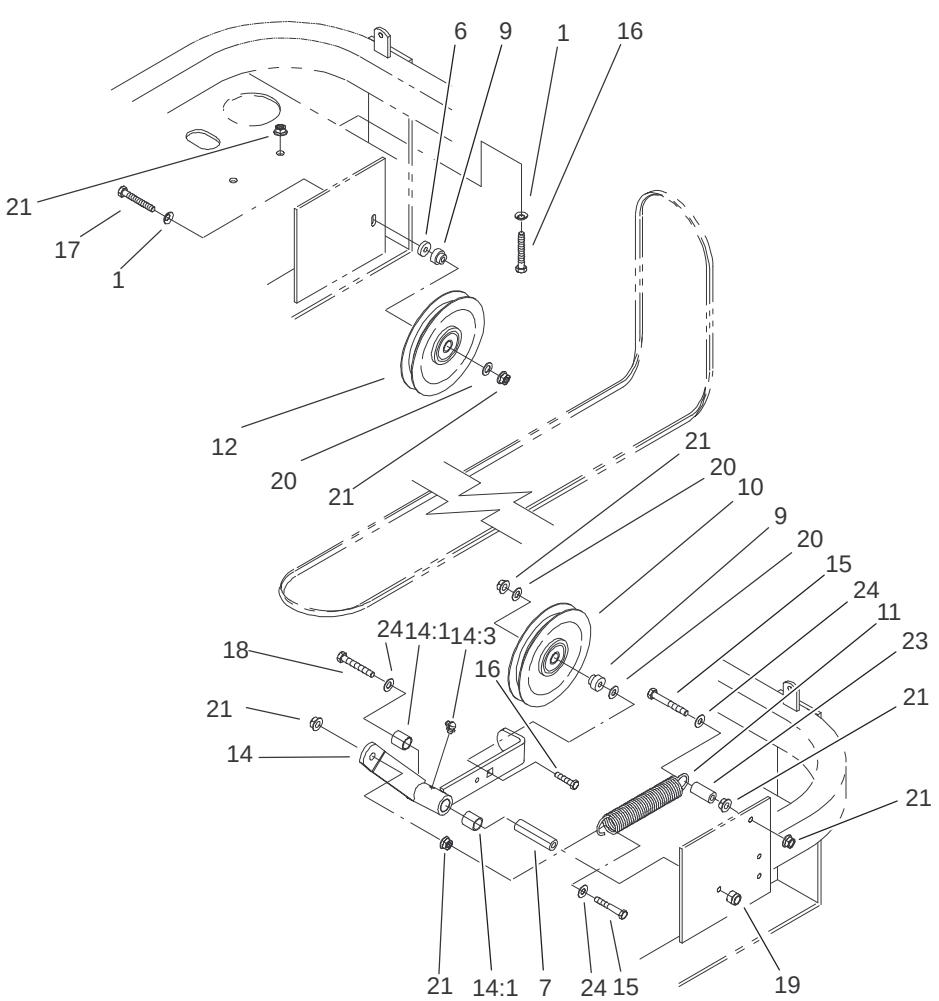


Sheet No.:10

# Idler Assembly

| Ref. No. | Part No. | Qty. | Description |
|---|---|---|---|
| 1 | 98–5975 | 5 | Washer–Belleville |
| 6 | 1–603050 | 1 | Spacer |
| 7 | 1–603384 | 1 | Bushing–Pivot, Idler |
| 9 | 1–603496 | 2 | Bushing–Idler |
| 10 | 99–4638 | 1 | Idler |
| 11 | 1–603402 | 1 | Spring–Extension |
| 12 | 1–633166 | 1 | V–Belt–Idler |
| 14 | 99–4677 | 1 | Idler Arm ASM |
| 14:1 | 1–513034 | 2 | Sleeve–Bearing |
| 14:3 | 302–40 | 1 | Fitting–Grease |
| 15 | 323–11 | 2 | Screw–HH |
| 16 | 323–9 | 5 | Screw–HH |
| 17 | 323–13 | 1 | Screw–HH |
| 18 | 1–800805 | 1 | Screw–HH |
| 19 | 3296–39 | 1 | Nut–Lock, NI |
| 20 | 3256–24 | 3 | Washer–Flat |
| 21 | 3290–357 | 10 | Nut–Flange, Lock |
| 23 | 1–603401 | 1 | Spacer–Fender |
| 24 | 3256–4 | 3 | Washer–Flat |

| Ref. No. | Part No. | Qty. | Description |
|---|---|---|---|

3324–984

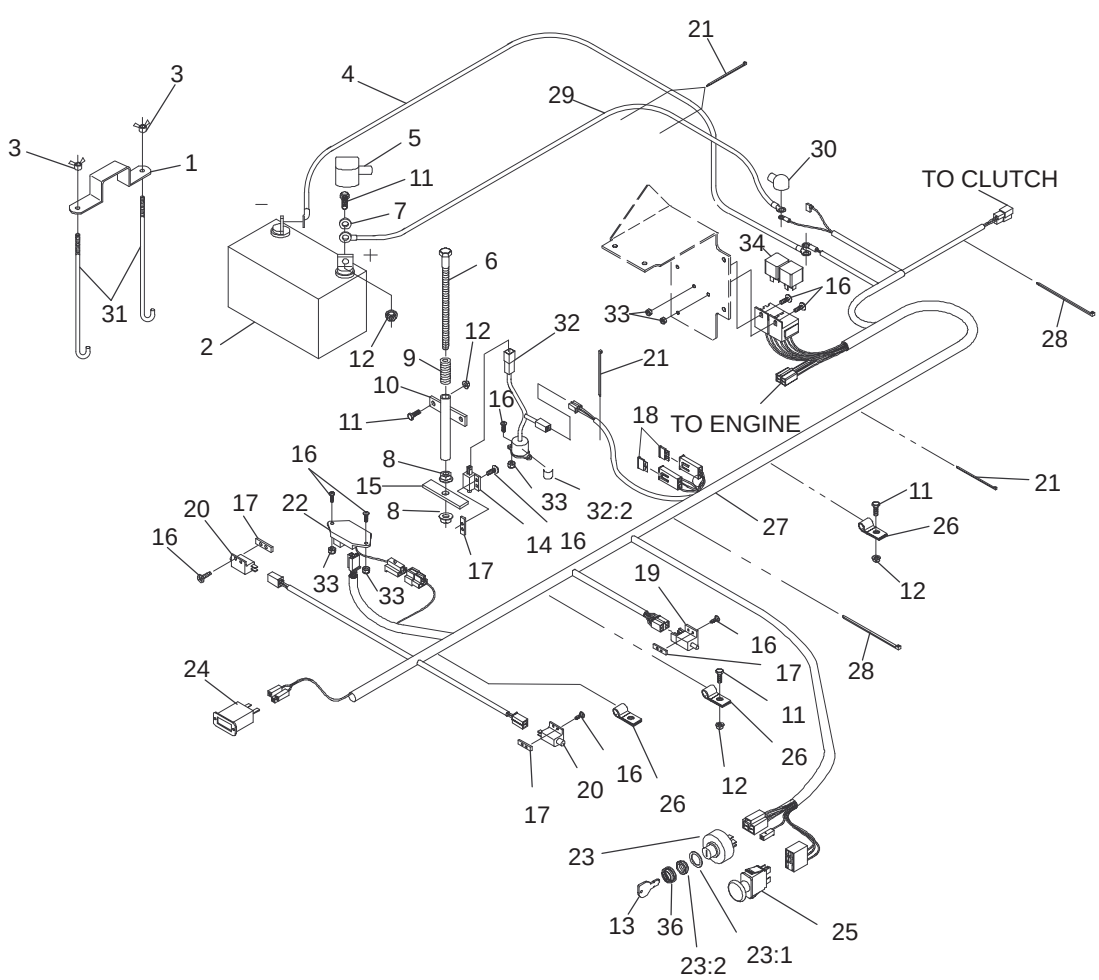


Sheet No.:11

# Electrical System Assembly

| Ref. No. | Part No. | Qty. | Description |
|---|---|---|---|
| 1 | 1–633652–03 | 1 | Strap–Holddown, Battery |
| 2 | 1–603479 | 1 | Battery |
| 3 | 1–543792 | 2 | Wingnut |
| 4 | 1–633307 | 1 | Wire–Ground |
| 5 | 1–543391 | 1 | Insulator–Battery |
| 6 | 1–800282 | 1 | Screw–HH |
| 7 | 3256–2 | 2 | Washer–Flat |
| 8 | 32128–20 | 2 | Nut–HF |
| 9 | 1–523415 | 1 | Spring–Switch, Seat |
| 10 | 1–522424–03 | 1 | Mount–Spring, Seat |
| 11 | 321–4 | 6 | Screw–HH |
| 12 | 32128–33 | 6 | Nut–HF |
| 13 | 63–8360 | 2 | Key–Ignition |
| 14 | 1–513152 | 1 | Switch–Closed, Normally |
| 15 | 1–513180 | 1 | Plate–Switch, Seat |
| 16 | 3290–500 | 14 | Screw–PPH |
| 17 | 1–633181 | 4 | Plate–Tapped |
| 18 | 1–816001 | 2 | Fuse–Type, Blade |
| 19 | 1–633111 | 1 | Switch |
| 20 | 1–513051 | 2 | Switch–Open, Normally |
| 21 | 1–303287 | 5 | Tie–Plastic |
| 22 | 100–6186 | 1 | Module–Delay, Seat |
| 23 | 88–9830 | 1 | Switch–Ignition |

| Ref. No. | Part No. | Qty. | Description |
|---|---|---|---|
| 23:1 | 3254–5 | 1 | Washer–Lock, Internal |
| 23:2 | 218–461 | 1 | Nut–HH |
| 24 | 1–513374 | 1 | Meter–Hours |
| 25 | 1–633673 | 1 | Switch–Delta |
| 26 | 1–633396 | 3 | Clip–Loom |
| 27 | 100–4340 | 1 | Harness–Wire |
| 28 | 1–303335 | 2 | Tie–Plastic |
| 29 | 1–523281 | 1 | Wire–Starter |
| 30 | 1–543393 | 1 | Insulator–Solenoid |
| 31 | 1–633651 | 2 | Bolt–Holddown |
| 32 | 1–644427 | 1 | Tilt Switch ASM |
| 32:2 | 1–643401 | 1 | Decal–Switch, Mercury |
| 33 | 3296–2 | 6 | Nut–Lock |
| 34 | 1–643275 | 2 | Relay |
| 36 | 103–0499 | 1 | Seal–Switch, Ignition |

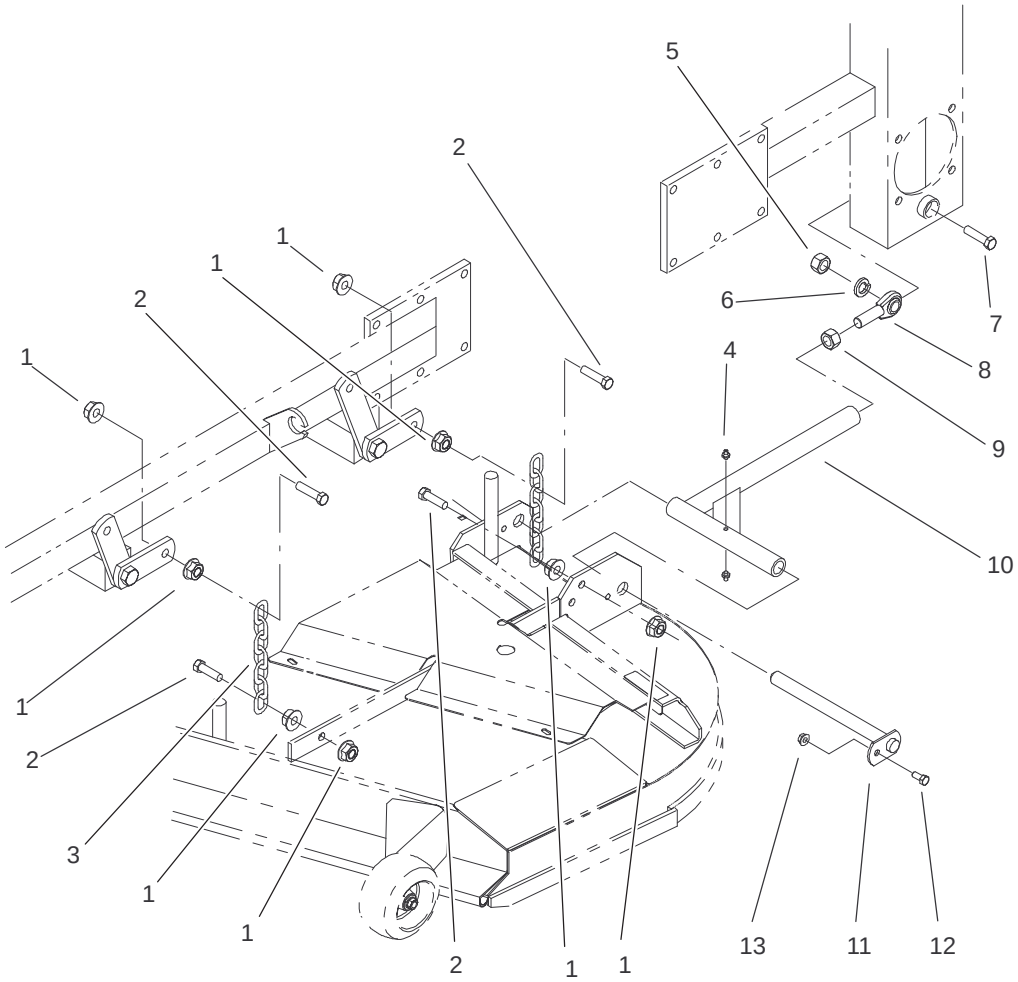


Sheet No.:12

# Frame and Deck Assembly

| Ref. No. | Part No. | Qty. | Description |
|---|---|---|---|
| 1 | 32128–37 | 16 | Nut–HF |
| 2 | 324–6 | 8 | Screw–HH |
| 3 | 1–633447 | 4 | Chain–Lift, Deck |
| 4 | 302–19 | 4 | Fitting–Grease |
| 5 | 3217–11 | 2 | Nut–Hex |
| 6 | 3253–8 | 2 | Washer–Lock |
| 7 | 327–11 | 2 | Screw–HH |
| 8 | 1–633029 | 2 | Balljoint–Spherical |
| 9 | 3219–6 | 2 | Nut–Hex |
| 10 | 103–1072–01 | 2 | Strut–Deck |
| 11 | 1–632199–01 | 2 | Pin–Strut, Deck |
| 12 | 322–3 | 2 | Screw–HH |
| 13 | 3296–29 | 2 | Nut–Lock |

| Ref. No. | Part No. | Qty. | Description |
|---|---|---|---|

3324–984

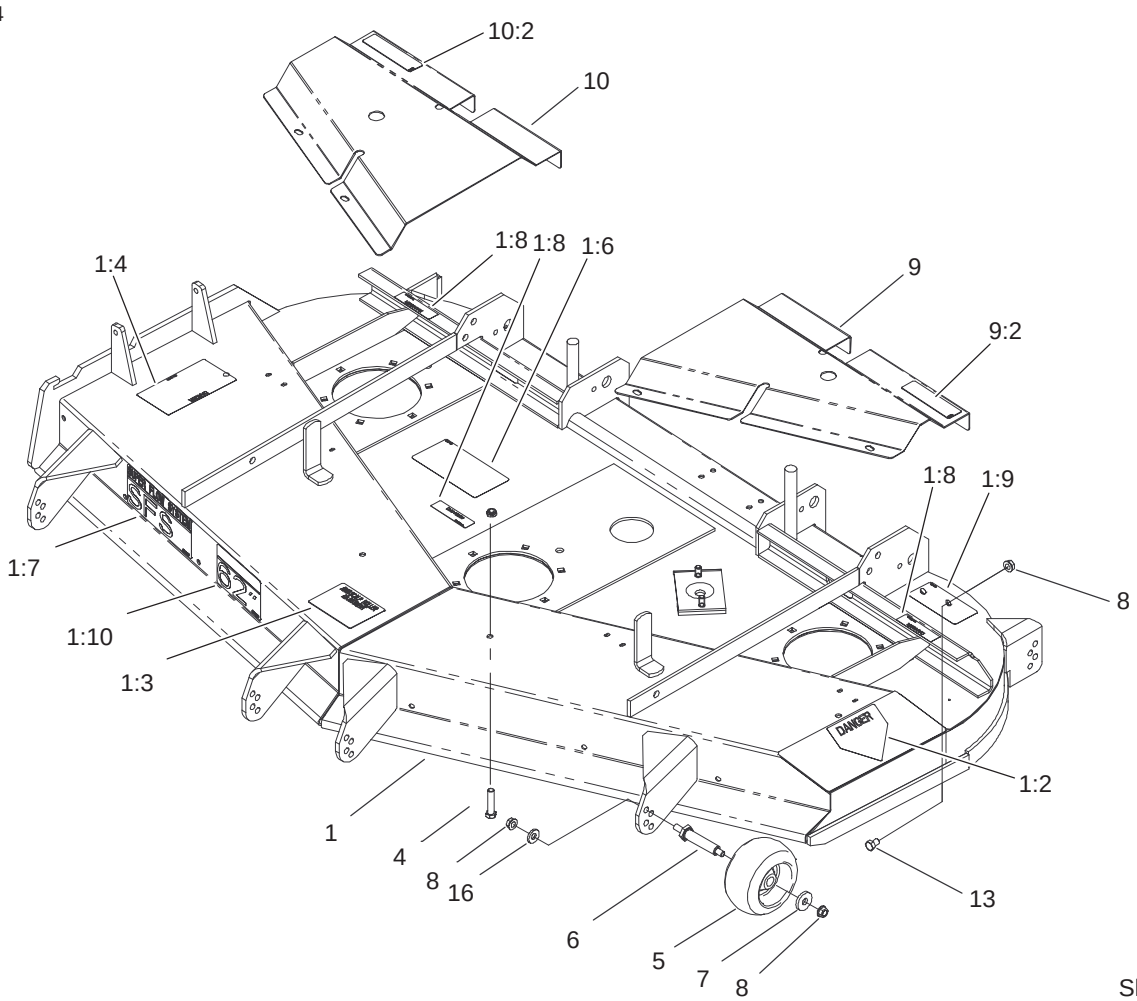


Sheet No.:32

# Deck, Deflector and Roller Assembly

| Ref. No. | Part No. | Qty. | Description |
|---|---|---|---|
| 1 | 104–7762 | 1 | Deck ASM |
| 1:2 | 43–8480 | 1 | Decal–Danger |
| 1:3 | 98–3798 | 1 | Decal–Wheel, Gage |
| 1:4 | 66–1340 | 1 | Decal–Danger |
| 1:6 | 99–4686 | 1 | Decal–Routing, Belt |
| 1:7 | 99–4619 | 1 | Decal–Sfs |
| 1:8 | 98–5954 | 3 | Decal–Missing, Cover |
| 1:9 | 93–7818 | 1 | Decal–Torque, Blade |
| 1:10 | 99–4620 | 1 | Decal–Deck |
| 4 | 323–4 | 4 | Screw–HH |
| 5 | 68–2730 | 6 | Gage–Wheel |
| 6 | 99–2842 | 6 | Spacer–Wheel |
| 7 | 1–373034 | 6 | Washer–Swivel |
| 8 | 3290–357 | 18 | Nut–Flange, Lock |
| 9 | 98–5955 | 1 | LH Cover ASM |
| 9:2 | 67–5360 | 1 | Decal–Danger |
| 10 | 98–5956 | 1 | RH Cover ASM |
| 10:2 | 67–5360 | 1 | Decal–Danger |
| 13 | 323–2 | 2 | Screw–HH |
| 16 | 98–5975 | 6 | Washer–Belleville |

| Ref. No. | Part No. | Qty. | Description |
|---|---|---|---|
| | | | |

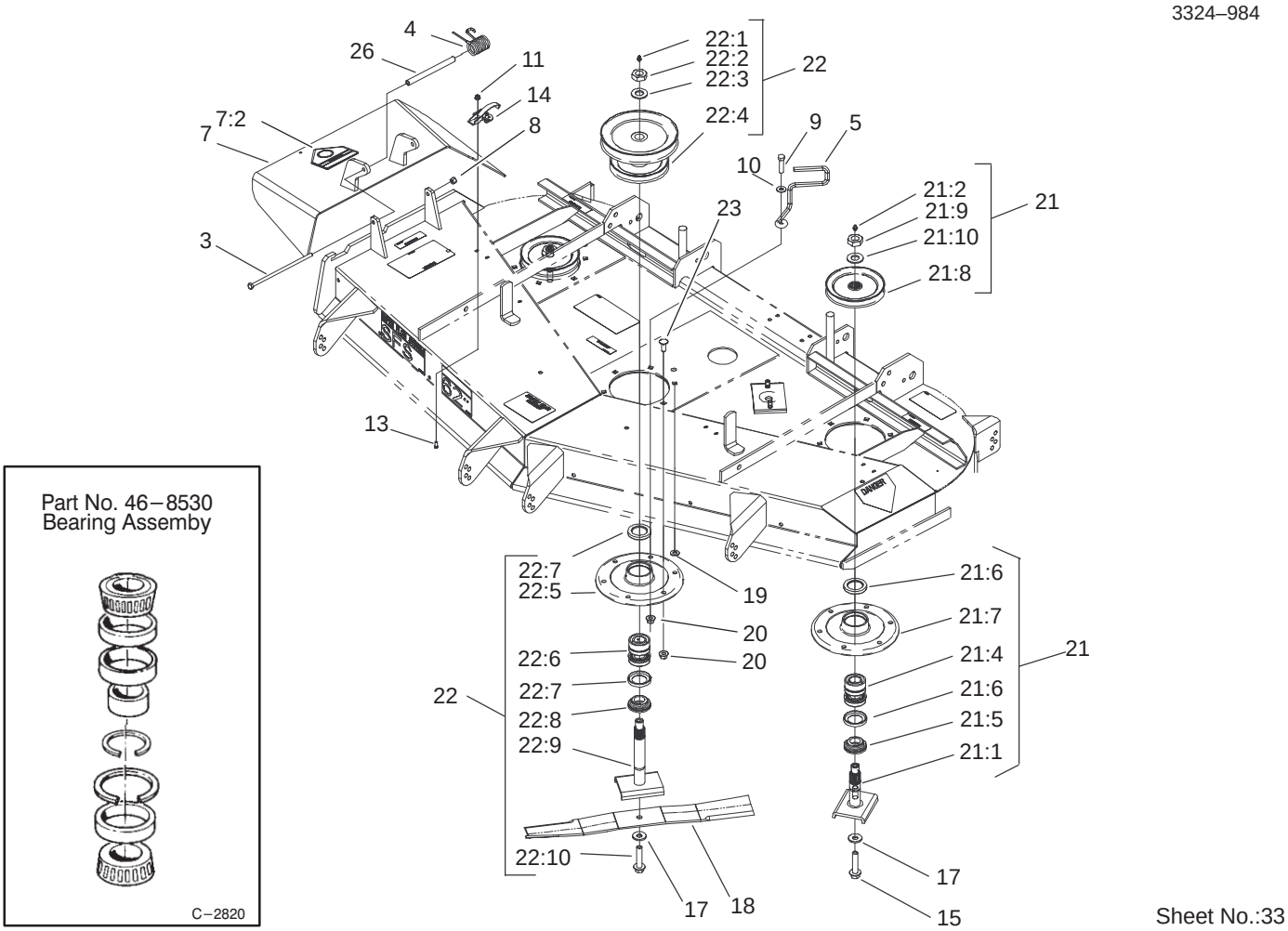


Sheet No.:33

# Spindle and Pulley Assembly

| Ref. No. | Part No. | Qty. | Description |
|---|---|---|---|
| 3 | 322–50 | 1 | Screw–Cap |
| 4 | 104–8554 | 1 | Spring–Torsion |
| 5 | 99–8933 | 1 | Guide–Belt |
| 7 | 104–7763 | 1 | Deflector ASM |
| 7:2 | 54–9220 | 1 | Decal–Danger |
| 8 | 3296–29 | 1 | Nut–Lock |
| 9 | 323–8 | 1 | Screw–HH |
| 10 | 3256–3 | 1 | Washer–Flat |
| 11 | 32128–17 | 8 | Nut–Lock, Flange |
| 13 | 3290–321 | 8 | Screw–HWH |
| 14 | 249–21 | 4 | Clamp–Slotted |
| 15 | 92–5816 | 2 | Bolt–Blade |
| 17 | 1–513435 | 3 | Washer–Spring |
| 18 | 44–6250 | 3 | Blade |
| 19 | 3256–24 | 1 | Washer–Flat |
| 20 | 32128–21 | 18 | Nut–HF |
| 21 | 99–4640 | 2 | Outer Spindle ASM |
| 21:1 | 27–0920 | 1 | Shaft–Spindle |
| 21:2 | 302–2 | 1 | Fitting–Grease |
| 21:4 | 46–8530 | 1 | Bearing ASM |
| 21:5 | 27–0950 | 1 | Spacer–Bearing, Spindle |
| 21:6 | 253–139 | 2 | Seal–Oil |
| 21:7 | 61–4160 | 1 | Housing–Spindle |
| 21:8 | 99–4614 | 1 | Pulley & Hub |
| 21:9 | 32146–20 | 1 | Nut–Jam |

| Ref. No. | Part No. | Qty. | Description |
|---|---|---|---|
| 21:10 | 7–4150 | 1 | Washer–Pinion |
| 22 | 99–4944 | 1 | Middle Spindle ASM |
| 22:1 | 302–2 | 1 | Fitting–Grease |
| 22:2 | 32146–20 | 1 | Nut–Jam |
| 22:3 | 92–5836 | 1 | Washer–Axle |
| 22:4 | 99–4939 | 1 | Pulley & Hub ASM |
| 22:5 | 61–4160 | 1 | Housing–Spindle |
| 22:6 | 46–8530 | 1 | Bearing ASM |
| 22:7 | 253–139 | 2 | Seal–Oil |
| 22:8 | 27–0950 | 1 | Spacer–Bearing, Spindle |
| 22:9 | 51–3551 | 1 | Shaft–Spindle |
| 22:10 | 92–5816 | 1 | Bolt–Blade |
| 23 | 3231–22 | 17 | Screw–CARR |
| 26 | 104–8555 | 1 | Spacer–Deflector, Mounting |

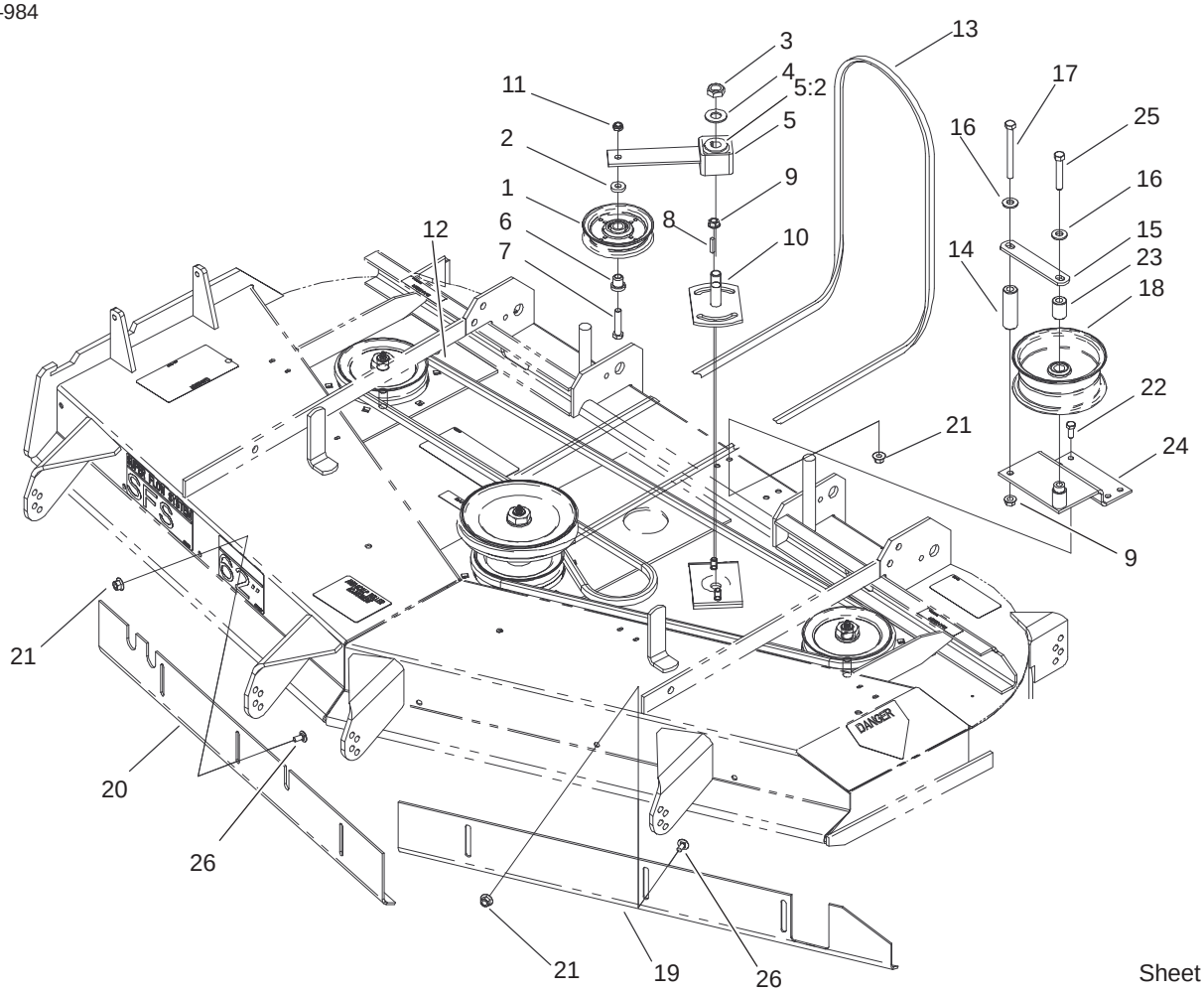


Sheet No.:34

# Belts and Idler Arm Assembly

| Ref. No. | Part No. | Qty. | Description |
|---|---|---|---|
| 1 | 65–5940 | 1 | Pulley–Idler |
| 2 | 7–0081 | 1 | Washer–Flat |
| 3 | 3296–71 | 1 | Nut–Lock NI |
| 4 | 3256–27 | 1 | Washer–Flat |
| 5 | 27–8580 | 1 | Idler Socket & Bushing ASM |
| 5:2 | 27–8490 | 1 | Bushing–Rubber, Idler |
| 6 | 65–5950 | 1 | Bushing–Pulley |
| 7 | 3211–8 | 1 | Screw–HH |
| 8 | 5–1077 | 1 | Key–Square |
| 9 | 3290–357 | 3 | Nut–Flange, Lock |
| 10 | 44–6301 | 1 | Plate–Idler, LH |
| 11 | 3296–5 | 1 | Nut–Lock, NI |
| 12 | 44–6260 | 1 | V–Belt |
| 13 | 99–4647 | 1 | V–Belt–Drive, Deck |
| 14 | 99–4659 | 1 | Spacer–Bracket |
| 15 | 1–653189 | 1 | Plate–Guide, Belt |
| 16 | 98–5975 | 2 | Washer–Belleville |
| 17 | 323–42 | 1 | Screw–HH |
| 18 | 1–413099 | 1 | Pulley–Idler |
| 19 | 99–2833–03 | 1 | Baffle–Front, LH |
| 20 | 99–2834–03 | 1 | Baffle–Front, RH |
| 21 | 32128–20 | 10 | Nut–HF |
| 22 | 322–3 | 4 | Screw–HH |
| 23 | 1–653190 | 1 | Spacer |
| 24 | 99–4684–01 | 1 | Bracket–Pulley |

| Ref. No. | Part No. | Qty. | Description |
|---|---|---|---|
| 25 | 323–11 | 1 | Screw–HH |
| 26 | 3230–18 | 6 | Screw–CARR |

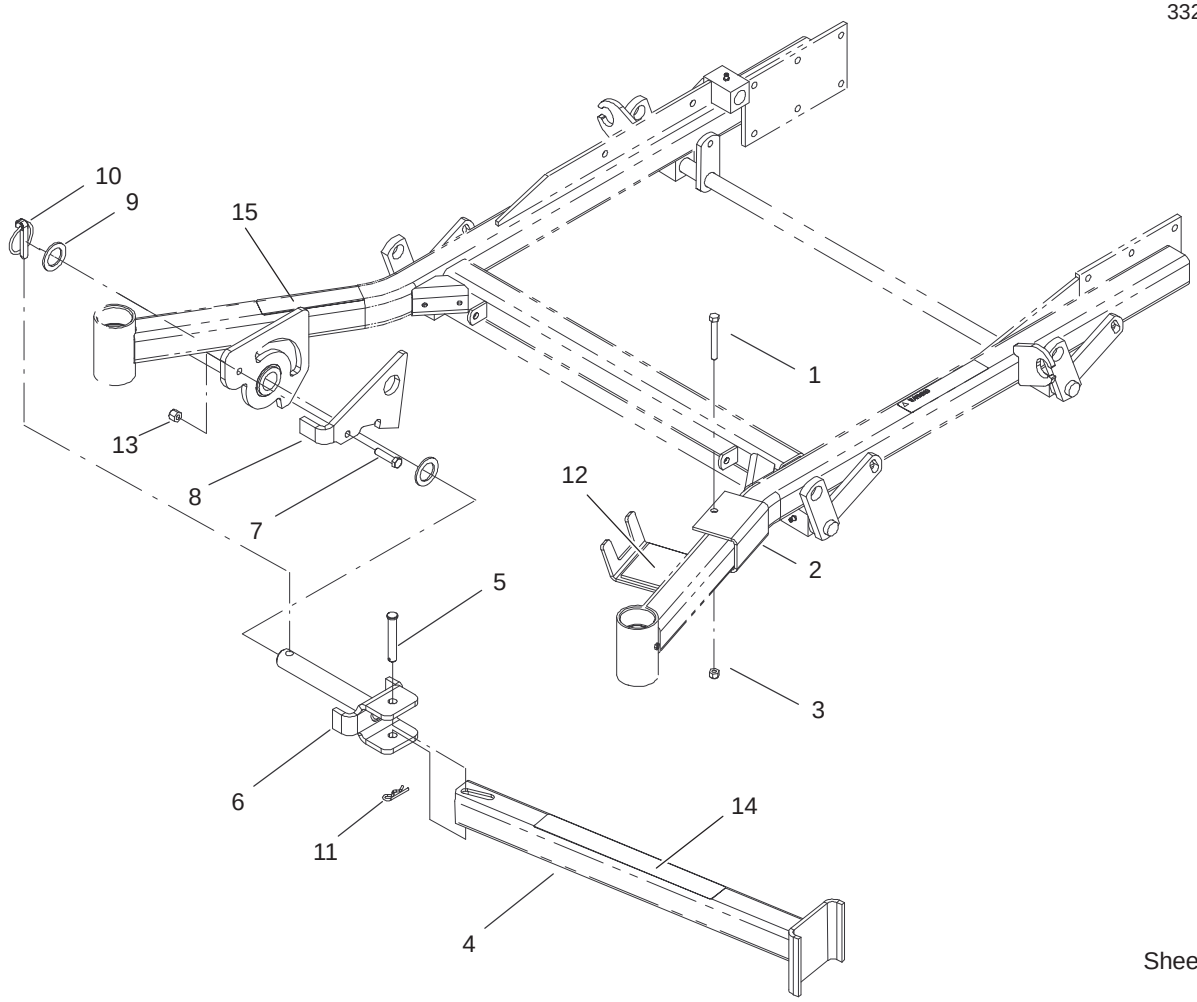


Sheet No.: 51

# Stand Assembly

| Ref. No. | Part No. | Qty. | Description |
|---|---|---|---|
| 1 | 322–13 | 1 | Screw–HH |
| 2 | 100–9699–01 | 1 | Bracket–Cradle |
| 3 | 3296–29 | 1 | Nut–Lock |
| 4 | 100–9695–01 | 1 | Leg ASM |
| 5 | 283–55 | 1 | Pin–Clevis |
| 6 | 100–9692–01 | 1 | Pivot Pin ASM |
| 7 | 323–8 | 1 | Screw–HH |
| 8 | 100–9686–01 | 1 | Bracket–Latch |
| 9 | 3–6781 | 2 | Washer–Thrust |
| 10 | 283–71 | 1 | Pin–Lynch |
| 11 | 3290–355 | 1 | Pin–Hair |
| 12 | 104–7765 | 1 | Cushion–Rubber |
| 13 | 3296–39 | 1 | Nut–Lock, NI |
| 14 | 104–7758 | 1 | Decal–Z Stand |
| 15 | 104–7759 | 1 | Decal–warning |

| Ref. No. | Part No. | Qty. | Description |
|---|---|---|---|

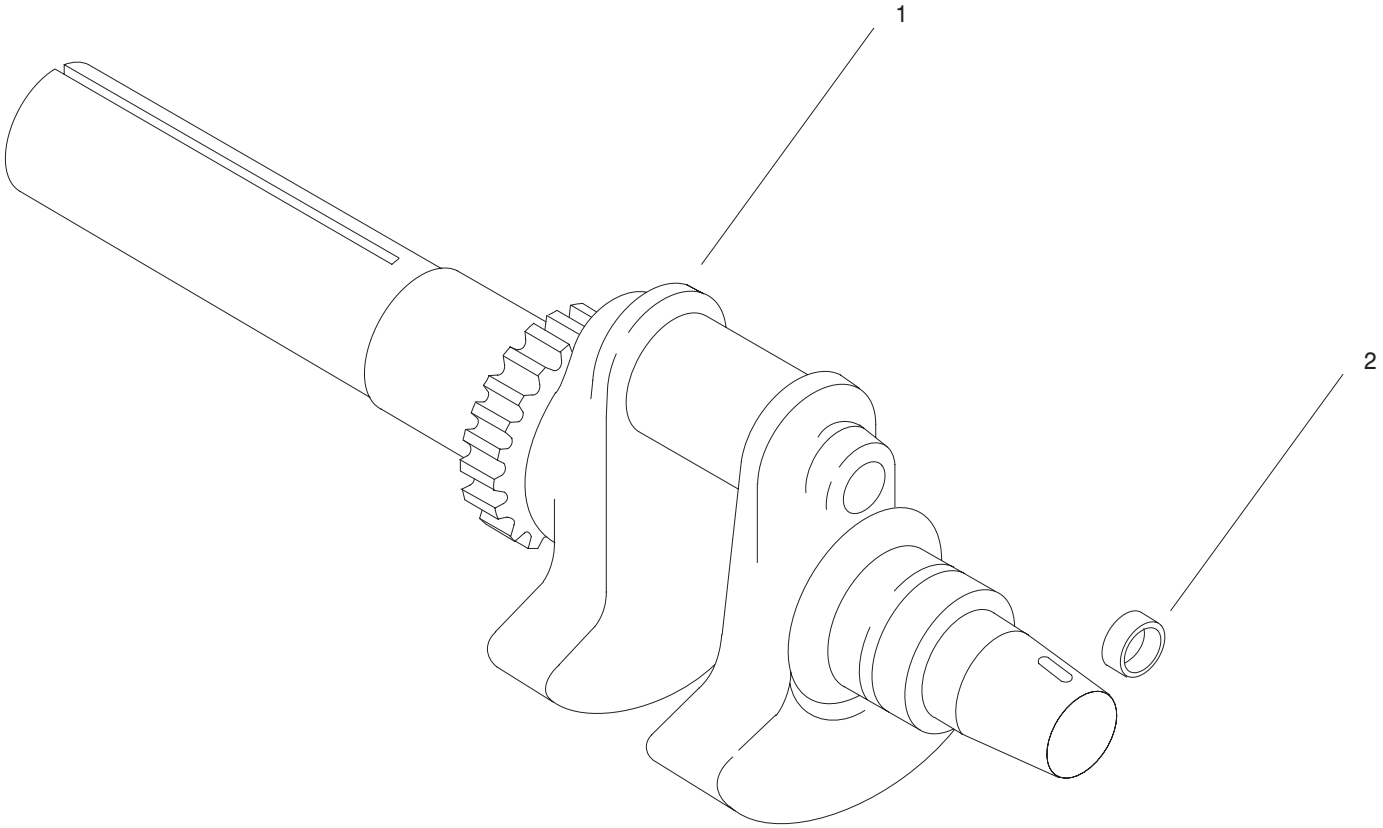


# Group 1 – Crankshaft (CH22S PS–76513 Kohler)

| Ref. No. | Part No. | Qty. | Description |
|---|---|---|---|
| 1 | 24 014 84 | 1 | Crankshaft |
| 2 | 52 139 09 | 1 | Plug, cup |

| Ref. No. | Part No. | Qty. | Description |
|---|---|---|---|
| | | | |

**Obtain Parts From Kohler**

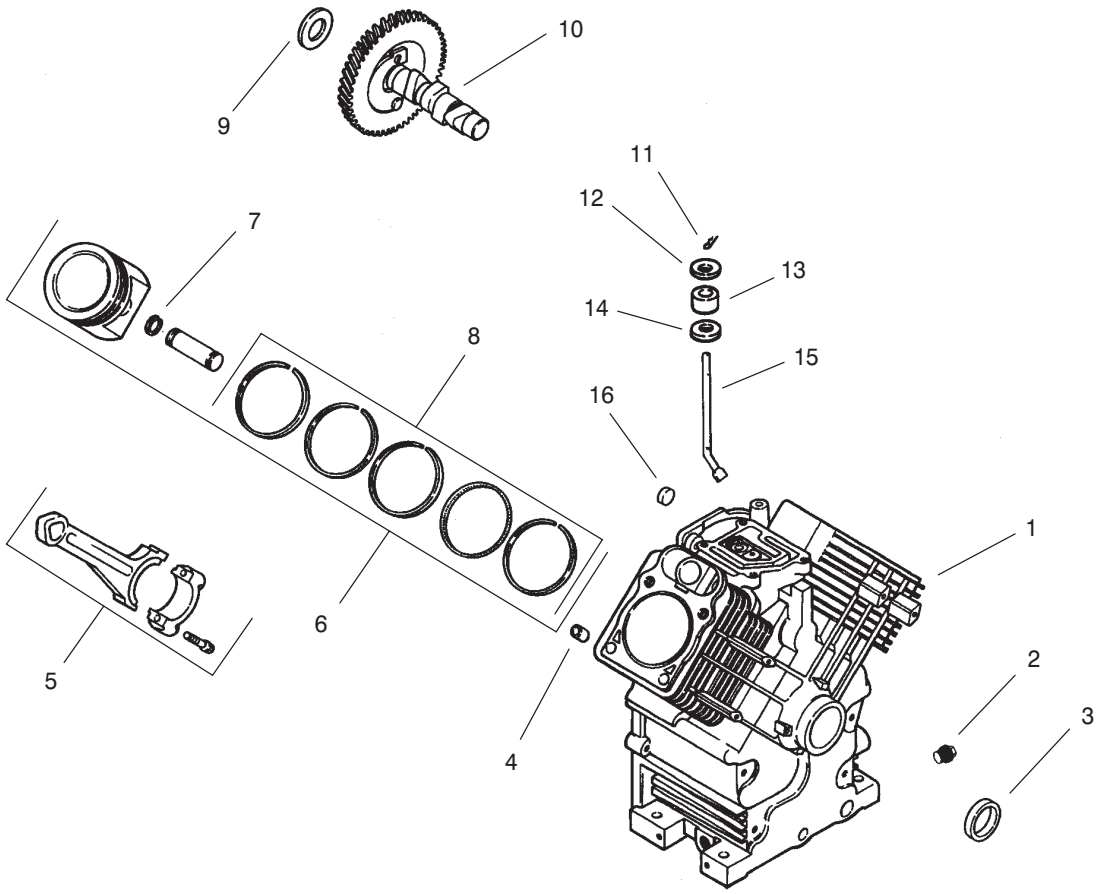


# Group 2 – Crankcase (CH22S PS–76513 Kohler)

| Ref. No. | Part No. | Qty. | Description |
|---|---|---|---|
| 1 | | | Crankcase |
| 2 | X–75–10 | 2 | Plug, pipe |
| 3 | 24 032 01 | 1 | Seal, oil front |
| 4 | 12 380 17 | 6 | Pin, dowel locating |
| 5 | 24 067 13 | 2 | Connecting Rod (Std.) |
| | 24 067 14 | 2 | Connecting Rod (.25) |
| 6 | 24 874 09 | 2 | Piston w/Ring Set (Std.) |
| | 24 874 10 | 2 | Piston w/Ring Set (.25) |
| | 24 874 11 | 2 | Piston w/Ring Set (.50) |
| 7 | 24 018 01 | 4 | Retainer, piston pin |
| 8 | 24 108 08 | 2 | Ring Set (Std.) |
| | 24 108 09 | 2 | Ring Set (.25) |
| | 24 108 10 | 2 | Ring Set (.50) |
| 9 | 12 422 09 | A/R | Shim, camshaft – red |
| | 12 422 13 | A/R | Shim, camshaft – black |
| | 12 422 07 | A/R | Shim, camshaft – white |
| | 12 422 08 | A/R | Shim, camshaft – blue |
| | 12 422 10 | A/R | Shim, camshaft – yellow |
| | 12 422 11 | A/R | Shim, camshaft – green |
| | 12 422 12 | A/R | Shim, camshaft – gray |
| 10 | 24 012 10 | 1 | Camshaft |
| 11 | 12 380 04 | 1 | Pin, hitch |
| 12 | M–0631005 | 1 | Washer, flat |

| Ref. No. | Part No. | Qty. | Description |
|---|---|---|---|
| 13 | 12 032 01 | 1 | Seal, governor cross shaft |
| 14 | X–25–102 | 1 | Washer, plain |
| 15 | 24 144 01 | 1 | Shaft, governor cross |
| 16 | 52 139 09 | 1 | Plug, cup |

**Obtain Parts From Kohler**

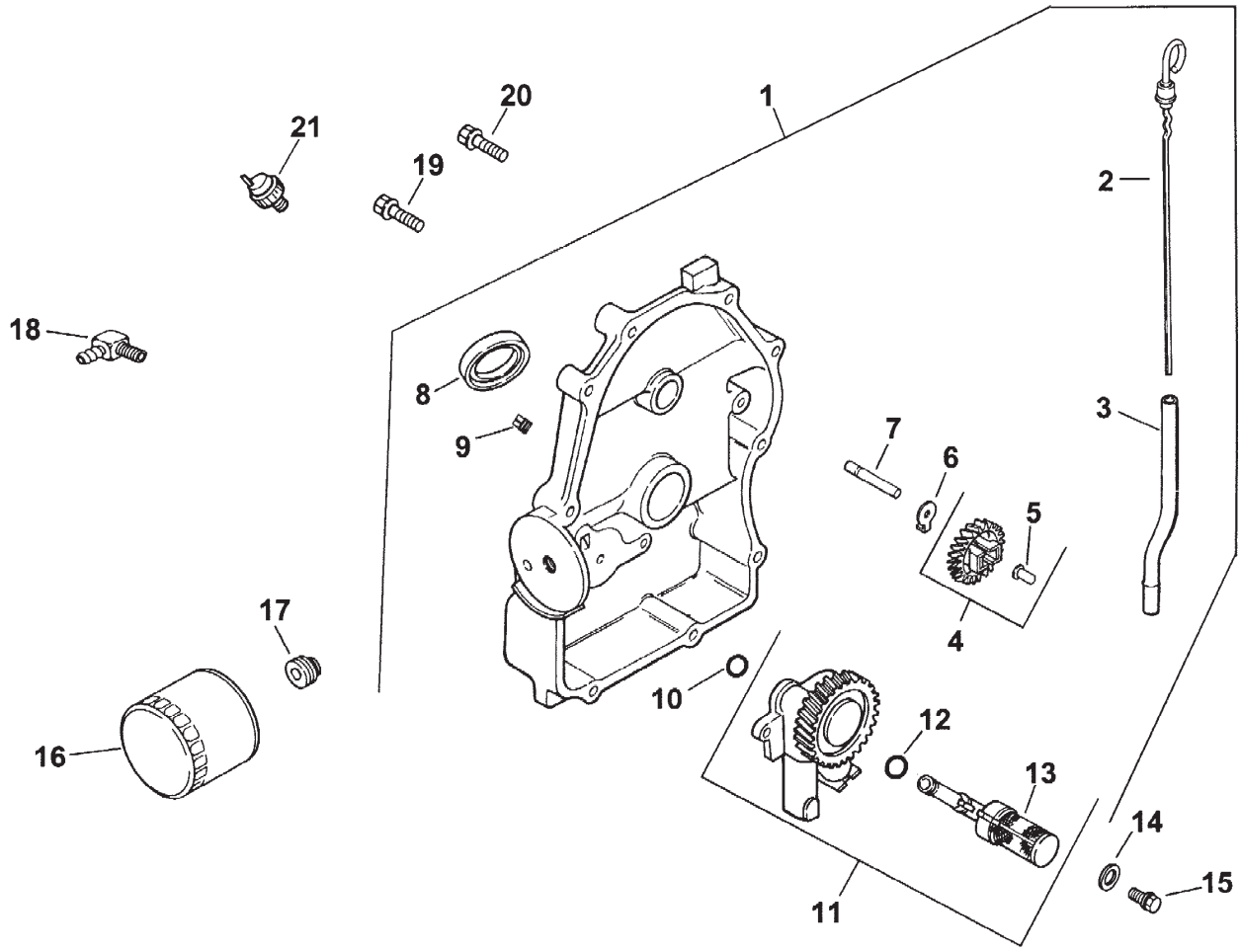


# Group 3 – Oil Pan/Lubrication (CH22S PS–76513 Kohler)

| Ref. No. | Part No. | Qty. | Description |
|---|---|---|---|
| 1 | 24 009 83 | 1 | Plate, closure assembly (Includes 2–12) |
| 2 | 24 038 06 | 1 | Dipstick |
| 3 | 24 123 08 | 1 | Tube, dipstick |
| 4 | 24 043 12 | 1 | Kit, governor gear (Includes 5) |
| 5 | 12 380 01 | 1 | Pin, governor regulating |
| 6 | 52 448 02 | 1 | Tab, locking |
| 7 | 12 144 02 | 1 | Shaft, governor gear |
| 8 | 52 032 08 | 1 | Seal, oil (PTO end) |
| 9 | X–75–23 | 2 | Plug,pipe 1/8” |
| 10 | 24 153 08 | 1 | O–Ring |
| 11 | 24 393 10 | 1 | Oil pump assembly (Includes 12,13) |
| 12 | 24 153 01 | 1 | O–Ring, oil pick–up |
| 13 | 24 381 04 | 1 | Pick–up, oil |
| 14 | M–0631005 | 2 | Washer, plain 6 mm |
| 15 | M–0645025 | 2 | Screw, hex flange |
| 16 | 52 050 02 | 1 | Filter, oil |
| 17 | 24 136 01 | 1 | Nipple,oil filter |
| 18 | 25 155 02 | 1 | Connector |
| 19 | 24 086 16 | 9 | Screw, hex flange |
| 20 | 24 086 17 | 1 | Screw, hex flange |

| Ref. No. | Part No. | Qty. | Description |
|---|---|---|---|
| 21 | 24 099 03 | 1 | Switch, pressure |

**Obtain Parts From Kohler**

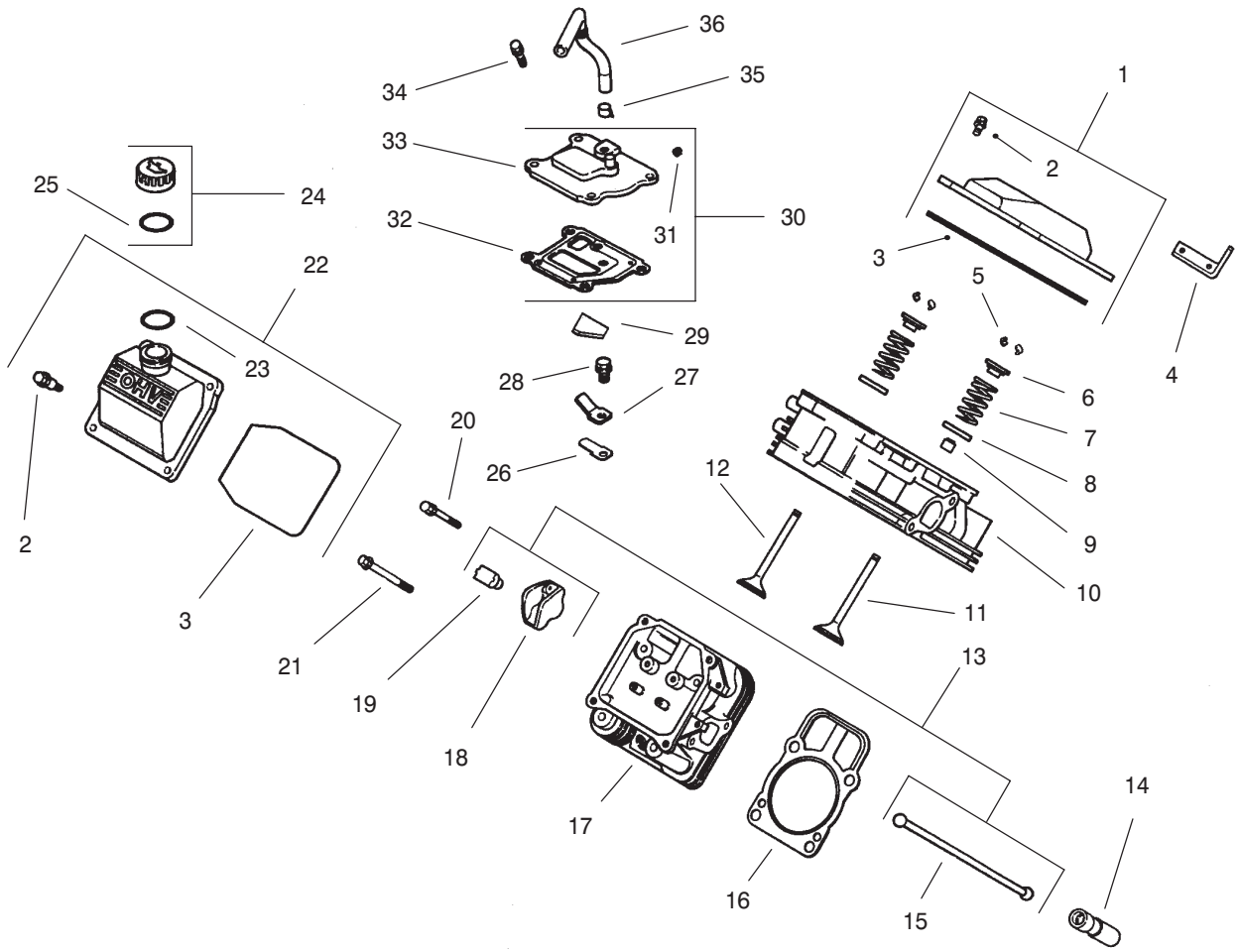


# Group 4 – Head/Valve/Breather (CH22S PS–76513 Kohler)

| Ref. No. | Part No. | Qty. | Description |
|---|---|---|---|
| 1 | 24 755 74 | 1 | Kit, valve cover – plain (Includes 2–3) |
| 2 | 24 086 32 | 4 | Screw, shoulder |
| 3 | 24 153 16 | 1 | O–Ring, valve cover |
| 4 | 24 445 01 | 1 | Strap, lifting |
| 5 | 12 755 03 | 4 | Kit, retainer |
| 6 | 12 173 01 | 4 | Cap, valve spring |
| 7 | 24 089 02 | 4 | Spring, valve |
| 8 | 235011 | 4 | Retainer, spring |
| 9 | 24 032 05 | 2 | Seal, valve stem |
| 10 | 24 318 13 | 1 | Head assembly, #1 cylinder |
| 11 | 24 017 01 | 2 | Valve, intake ( Std.) |
| | 24 017 02 | 2 | Valve, intake (.25) |
| 12 | 24 016 01 | 2 | Valve, exhaust (Std.) |
| | 24 016 02 | 2 | Valve, exhaust (.25) |
| 13 | 24 755 66 | 1 | Kit, valve train (Includes 15,18,19) |
| 14 | 12 351 02 | 4 | Lifter, valve |
| 15 | 24 411 05 | 4 | Rod, push |
| 16 | 24 041 40 | 2 | Gasket, cylinder head |
| 17 | 24 318 10 | 1 | Head assembly, #2 cylinder |
| 18 | 25 186 01 | 4 | Arm, rocker |
| 19 | 24 599 01 | 4 | Pivot, rocker arm |
| 20 | M–0640034 | 4 | Screw, hex. flange |

| Ref. No. | Part No. | Qty. | Description |
|---|---|---|---|
| 21 | 24 086 44 | 8 | Screw, hex. flange |
| 22 | 24 755 75 | 1 | Kit, valve cover – oil fill (Includes 2,3,23) |
| 23 | 24 153 09 | 1 | O–Ring |
| 24 | 24 755 46 | 1 | Kit, oil fill cap (Includes 25) |
| 25 | 12 153 03 | 1 | O–Ring, oil fill cap |
| 26 | 24 402 03 | 1 | Reed, breather |
| 27 | 12 018 01 | 1 | Retainer, breather reed |
| 28 | M–0545010 | 1 | Screw, hex. flange |
| 29 | 24 050 01 | 1 | Filter, breather |
| 30 | 24 033 01 | 1 | Kit, breather (Includes 31–33) |
| 31 | X–75–23 | 1 | Plug, allen head pipe |
| 32 | 24 041 23 | 1 | Gasket, breather |
| 33 | 24 096 02 | 1 | Cover, breather |
| 34 | M–0645020 | 4 | Screw, hex. flange |
| 35 | X–426–9 | 1 | Clamp, breather |
| 36 | 24 326 06 | 1 | Hose, breather |

**Obtain Parts From Kohler**

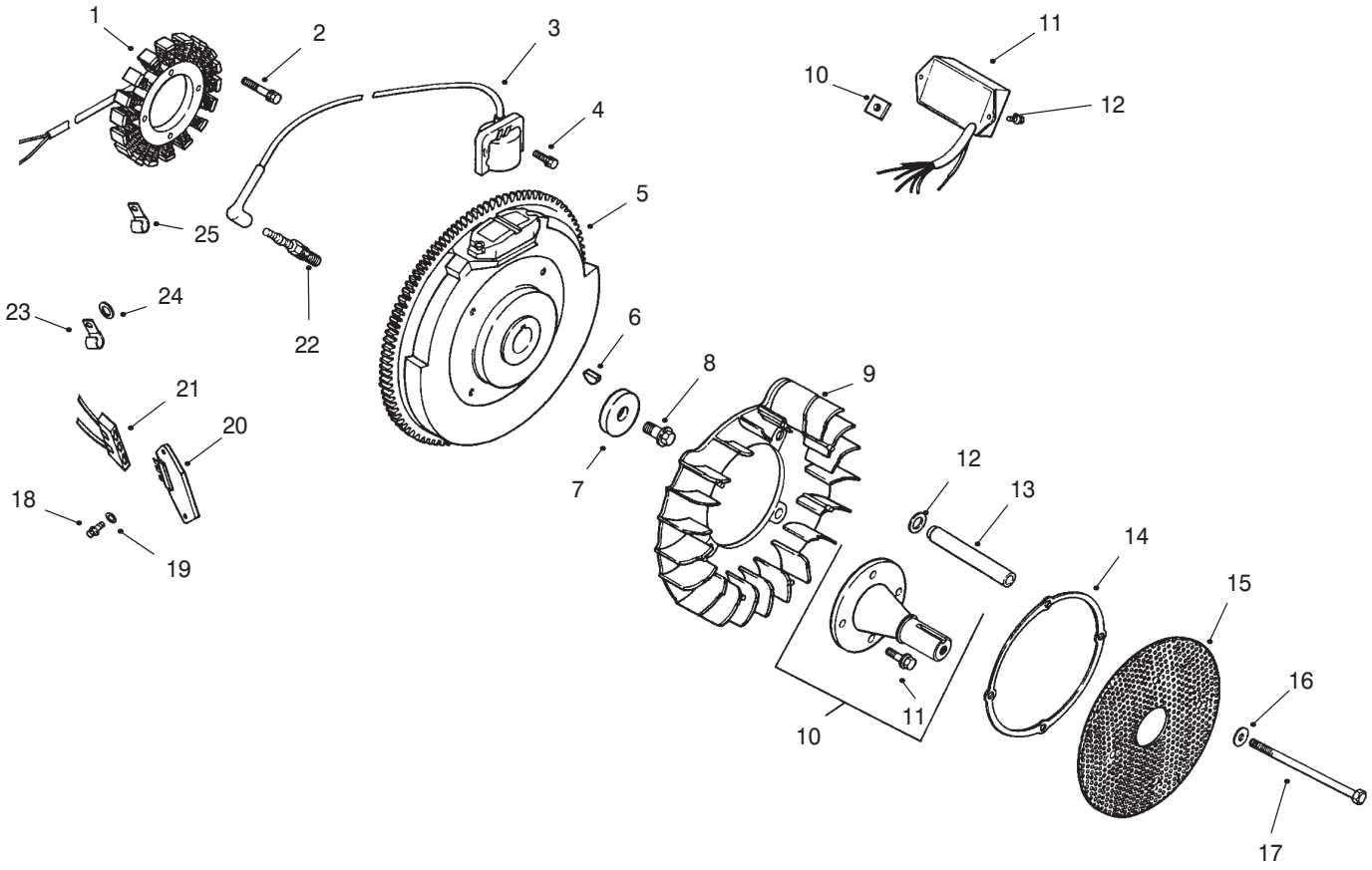


# Group 5 – Ignition/Electrical (CH22S PS–76513 Kohler)

| Ref. No. | Part No. | Qty. | Description |
|---|---|---|---|
| 1 | 54 755 09 | 1 | Kit, 15 amp stator (Incl. 24 126 71 bracket) |
| 2 | M–0548025 | 2 | Screw, hex. cap |
| 3 | 24 584 01 | 2 | Module, ignition |
| 4 | M–0545020 | 4 | Screw, hex. socket hd. |
| 5 | 24 025 11 | 1 | Flywheel |
| 6 | X–42–15 | 1 | Key |
| 7 | 12 468 03 | 1 | Washer, plain 3/8” |
| 8 | 12 086 14 | 1 | Screw, hex flange |
| 9 | 24 157 03 | 1 | Fan |
| 10 | 24 755 08 | 1 | Kit, front drive shaft (Includes 14) |
| 11 | M–0839025 | 4 | Screw, hex flange |
| 12 | 24 468 11 | 4 | Washer, spring 10mm |
| 13 | 24 112 14 | 4 | Spacer |
| 14 | 24 141 06 | 1 | Ring, support |
| 15 | 24 162 22 | 1 | Screen, grass |
| 16 | X–25–53 | 4 | Washer, plain 1/4” |
| 17 | M–0603100 | 4 | Screw, hex |
| 18 | 24 086 18 | 2 | Screw, phillips hd. |
| 19 | X–25–92 | 2 | Washer, plain 3/16 |
| 20 | 25 403 03 | 1 | Rectifier–regulator, 15 amp |
| 21 | 236602 | 1 | Connector |
| 22 | 12 132 06 | 2 | Spark Plug |

| Ref. No. | Part No. | Qty. | Description |
|---|---|---|---|
| 23 | 48 154 02 | 1 | Clip, cable |
| 24 | X–25–63 | 1 | Washer, plain 1/4” |
| 25 | 235173 | 1 | Clip, cable |
| | | | Not Illustrated |
| | 25 518 28 | 1 | Lead, black, (4” – 18 gauge – insulated grip barrel eyelet terminals) |
| | 24 176 07 | 1 | Harness, wiring |
| | 24 126 71 | 1 | Bracket, stator wire |
| | X–22–11 | 1 | Washer, lock |

**Obtain Parts From Kohler**

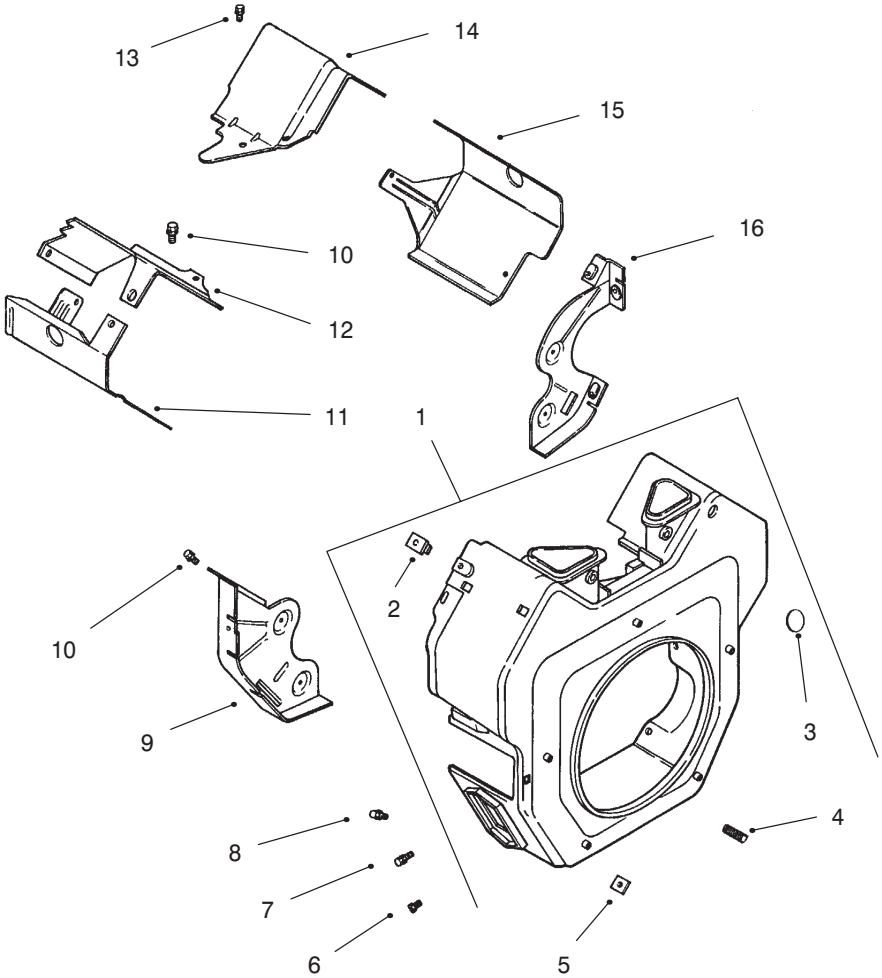


Sheet No.:
T–xxxx

# Group 6 – Blower Housing & Baffles (CH22S PS–76513 Kohler)

| Ref. No. | Part No. | Qty. | Description |
|---|---|---|---|
| 1 | 24 027 83 | 1 | Housing, blower (Includes 2–5) |
| 2 | 24 100 02 | 2 | Nut, plastic |
| 3 | 24 755 90 | 1 | Kit, access hole plug |
| 4 | 25 086 43 | 1 | Screw, set |
| 5 | 24 100 01 | 2 | Nut, plastic |
| 6 | M–0551016 | 1 | Screw, hex. flange |
| 7 | M–0545016 | 5 | Screw, hex. flange |
| 8 | M–0567020 | 2 | Screw, hex. flange |
| 9 | 24 146 02 | 1 | Plate, backing – #2 side |
| 10 | M–0645016 | 6 | Screw, hex. flange |
| 11 | 24 063 20 | 1 | Baffle, cyl. barrel–#2 side |
| 12 | 24 063 17 | 1 | Baffle, valley – #2 side |
| 13 | M–0545010 | 2 | Screw, hex. flange |
| 14 | 24 063 24 | 1 | Baffle, valley – #1 side |
| 15 | 24 063 30 | 1 | Baffle, cyl. barrel–#1 side |
| 16 | 24 146 08 | 1 | Plate, backing – #1 side |
| | 24 113 62 | 1 | Decal, HP |

| Ref. No. | Part No. | Qty. | Description |
|---|---|---|---|
| | | | |

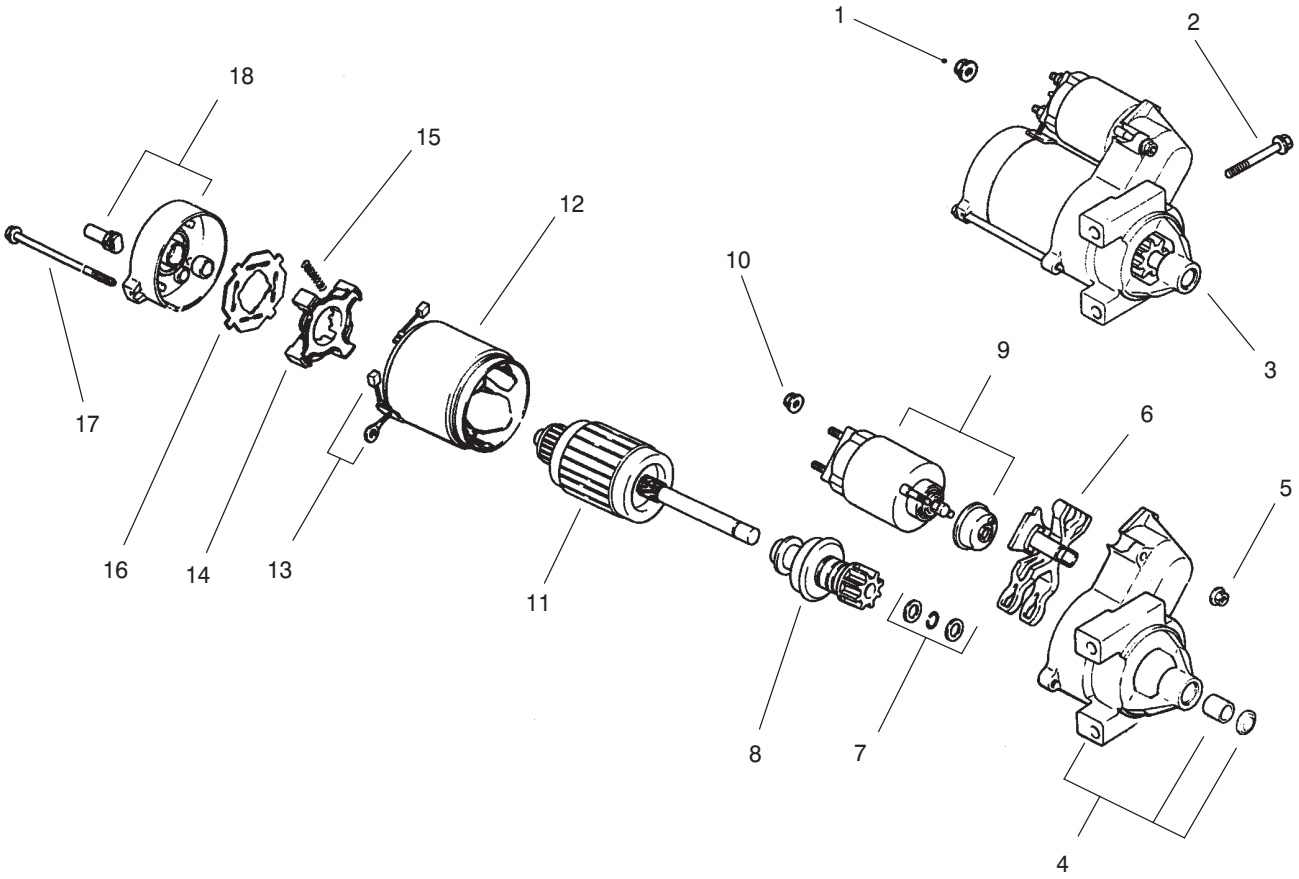


# Group 7 – Starting System (CH22S PS–76513 Kohler)

| Ref. No. | Part No. | Qty. | Description |
|---|---|---|---|
| 1 | M–0841080 | 1 | Nut, hex flange |
| 2 | M–0839080 | 2 | Screw, hex. flange |
| 3 | 24 098 01 | 1 | Starter, solenoid shift assembly (Incl. 4–18) |
| 4 | 24 081 04 | 1 | Drive, end cap |
| 5 | 52 100 10 | 2 | Nut, starter |
| 6 | 12 090 10 | 1 | Lever, starter drive |
| 7 | 24 755 84 | 1 | Kit, starter repair |
| 8 | 12 239 01 | 1 | Drive, pinion |
| 9 | 52 435 02 | 1 | Solenoid |
| 10 | 52 100 09 | 1 | Nut, starter |
| 11 | 12 170 04 | 1 | Armature, starter |
| 12 | 12 471 01 | 1 | Frame |
| 13 | 52 221 01 | 1 | Kit, brush & spring (Includes 15) |
| 14 | 52 323 03 | 1 | Holder, brush |
| 15 | 52 089 09 | 4 | Spring, brush |
| 16 | 52 168 01 | 1 | Insulator |
| 17 | 52 211 05 | 2 | Bolt, thru |
| 18 | 24 301 01 | 1 | Commutator, end cap |

| Ref. No. | Part No. | Qty. | Description |
|---|---|---|---|
| | | | |

**Obtain Parts From Kohler**

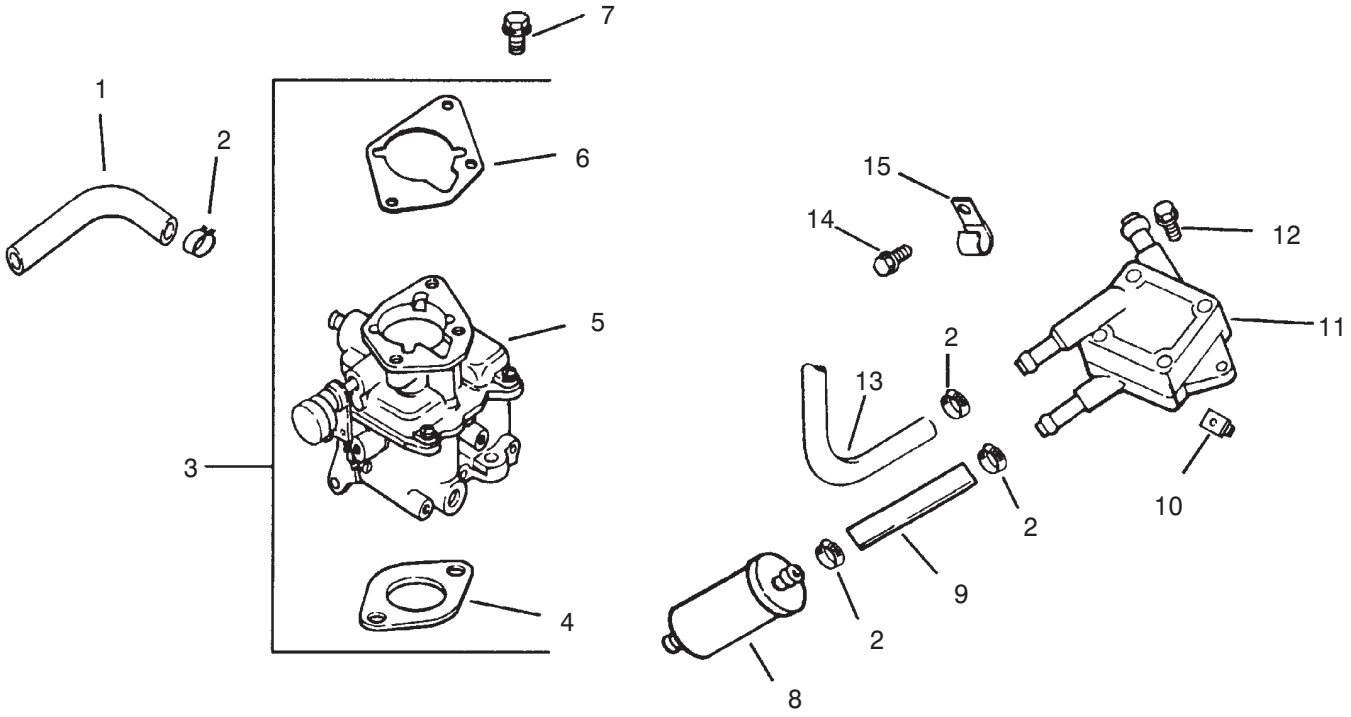


# Group 8 – Fuel System (CH22S PS–76513 Kohler)

| Ref. No. | Part No. | Qty. | Description |
|---|---|---|---|
| 1 | 25 353 10 | 2 | Line, fuel – 9” |
| 2 | X–426–9 | 6 | Clamp, hose |
| 3 | 24 853 34 | 1 | Kit, carburetor w/gasket (Includes 4–6) |
| 4 | 24 041 06 | 1 | Gasket, air cleaner base |
| *5 | 24 053 34 | 1 | Carburetor assembly |
| 6 | 24 041 17 | 1 | Gasket, carburetor |
| 7 | M–0651030 | 2 | Screw, hex. flange |
| 8 | 24 050 02 | 1 | Filter, fuel |
| 9 | 25 353 15 | 1 | Line, fuel |
| 10 | 24 100 01 | 2 | Nut, plastic |
| 11 | 24 393 04 | 1 | Pump, fuel–pulse |
| 12 | 24 086 12 | 2 | Screw, hex |
| 13 | 24 353 02 | 1 | Line, fuel 15–1/2” |
| 14 | M–0650012 | 1 | Screw, hex flange |
| 15 | 47 154 01 | 1 | Clip, cable |

| Ref. No. | Part No. | Qty. | Description |
|---|---|---|---|
| | | | |

**Obtain Parts From Kohler**
*For Information Only – Not Available Separately

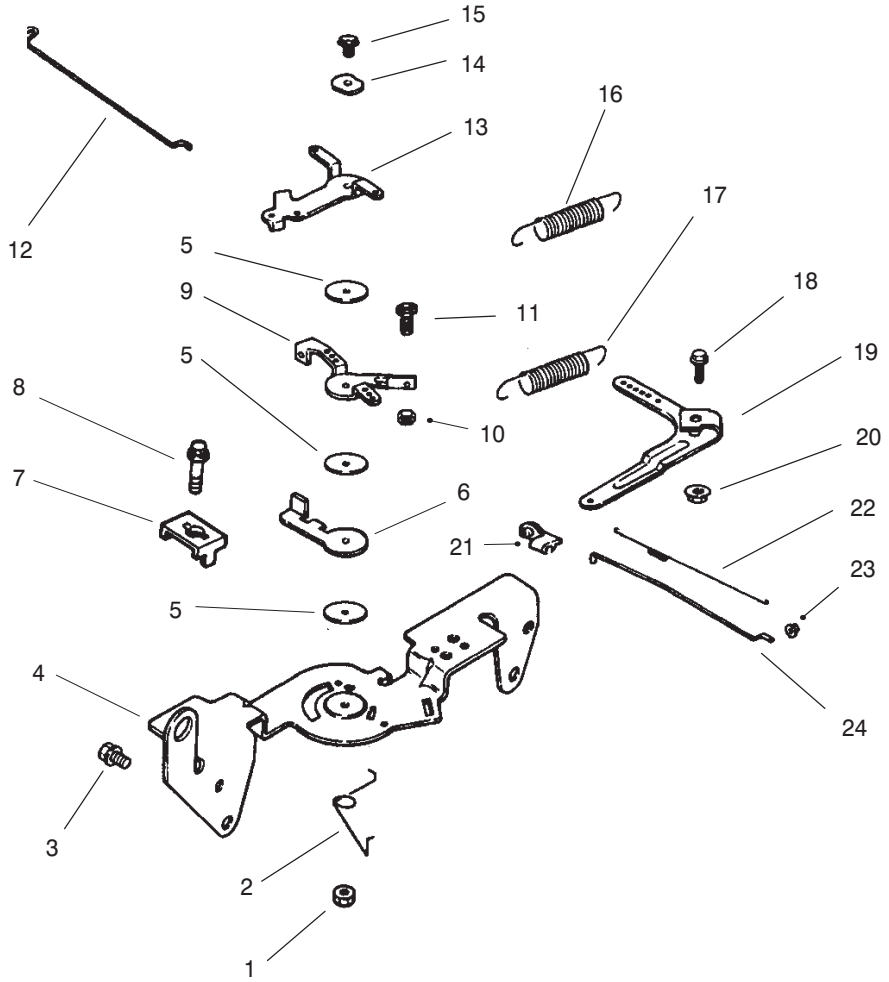


# Group 9 – Engine Controls (CH22S PS–76513 Kohler)

| Ref. No. | Part No. | Qty. | Description |
|---|---|---|---|
| 1 | M–0547050 | 1 | Nut, hex. lock |
| 2 | 24 089 03 | 1 | Spring, choke return |
| 3 | M–0645016 | 4 | Screw, hex. flange |
| 4 | 24 126 56 | 1 | Bracket, control |
| 5 | 24 468 01 | 3 | Washer, plain |
| 6 | 24 090 07 | 1 | Lever, throttle actuator |
| 7 | 12 237 01 | 2 | Clamp, cable |
| 8 | M–0545016 | 2 | Screw, hex. flange |
| 9 | 24 090 03 | 1 | Lever, throttle control |
| 10 | M–0446030 | 1 | Nut, hex |
| 11 | M–0401030 | 1 | Screw, hex. cap |
| 12 | 24 079 02 | 1 | Linkage, choke |
| 13 | 24 090 05 | 1 | Lever, choke |
| 14 | 41 468 03 | 1 | Washer, spring |
| 15 | M–0545020 | 1 | Screw, hex. flange |
| 16 | 24 089 38 | 1 | Spring, throttle limiter |
| 17 | 24 089 15 | 1 | Spring, governor |
| 18 | SM–0642025 | 1 | Screw, hex. flange |
| 19 | 24 090 14 | 1 | Lever, governor |
| 20 | M–0641060 | 1 | Nut, hex. flange |
| 21 | 25 158 11 | 1 | Bushing, linkage retaining |
| 22 | 24 089 01 | 1 | Spring, linkage |
| 23 | 25 158 08 | 1 | Bushing, linkage retaining |

| Ref. No. | Part No. | Qty. | Description |
|---|---|---|---|
| 24 | 24 079 01 | 1 | Linkage, throttle |

**Obtain Parts From Kohler**

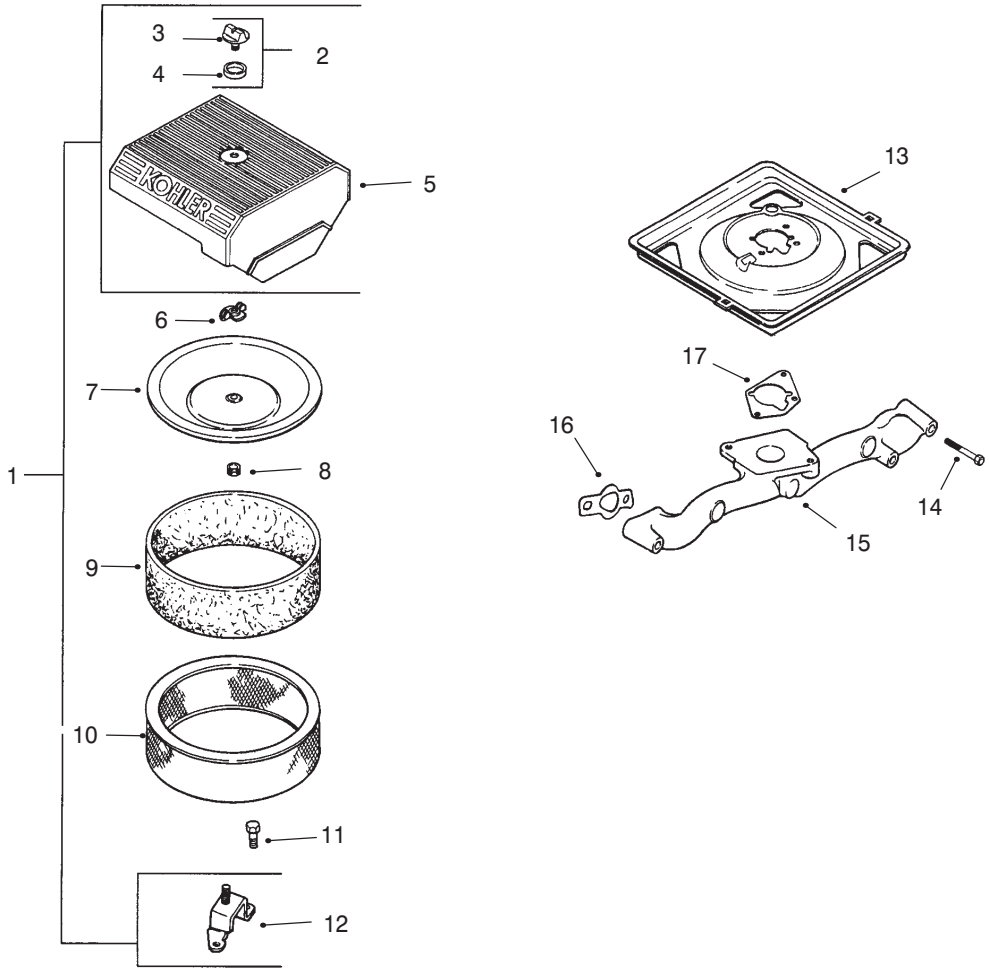


# Group 10 – Air Intake/Filtration (CH22S PS–76513 Kohler)

| Ref. No. | Part No. | Qty. | Description |
|---|---|---|---|
| 1 | 24 753 05 | 1 | Kit, air cleaner (Includes 2–5, 12) |
| 2 | 54 755 01 | 1 | Kit, air cleaner knob (Includes 3,4) |
| 3 | 25 341 03 | 1 | Knob, cover |
| 4 | 24 153 15 | 1 | O–Ring |
| 5 | 24 096 24 | 1 | Cover, air cleaner |
| 6 | 12 100 01 | 2 | Wing Nut |
| 7 | 24 096 01 | 1 | Cover, inner air cleaner |
| 8 | 230046 | 1 | Seal, inner air cleaner |
| 9 | 24 083 05 | 1 | Precleaner, element |
| 10 | 24 083 03 | 1 | Element, air cleaner |
| 11 | M–0645016 | 3 | Screw, hex flange |
| 12 | 24 126 43 | 1 | Bracket, air cleaner base |
| 13 | 24 094 11 | 1 | Base, air cleaner |
| 14 | M–0651055 | 4 | Screw, hex flange |
| 15 | 24 164 14 | 1 | Manifold, intake |
| 16 | 24 041 01 | 2 | Gasket, intake manifold |
| 17 | 24 041 06 | 1 | Gasket, air cleaner base |

| Ref. No. | Part No. | Qty. | Description |
|---|---|---|---|
| | | | |

**Obtain Parts From Kohler**

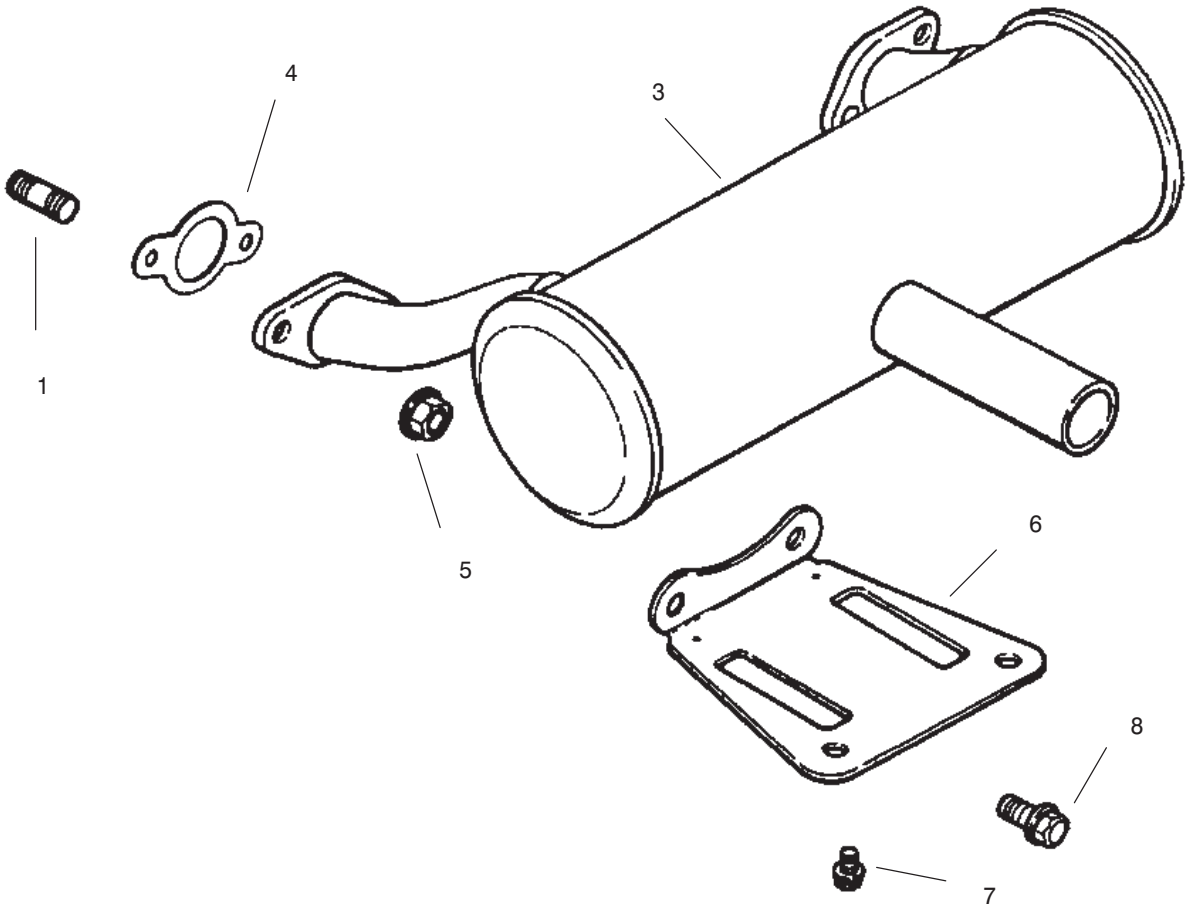


# Group 11 – Exhaust (CH22S PS–76513 Kohler)

| Ref. No. | Part No. | Qty. | Description |
|---|---|---|---|
| 1 | 25 072 04 | 4 | Stud |
| 3 | 24 068 17 | 1 | Muffler Canister – Center Outlet |
| 4 | 24 041 02 | 2 | Gasket, exhaust |
| 5 | M–0841080 | 4 | Nut, hex flange |
| 6 | 24 126 12 | 1 | Bracket, muffler |
| 7 | M–0650012 | 4 | Screw, hex. flange |
| 8 | M–0839020 | 2 | Screw |

| Ref. No. | Part No. | Qty. | Description |
|---|---|---|---|
| | | | |

**Obtain Parts From Kohler**

# Maintenance Record

| Date | | | | | | | | |
|---|---|---|---|---|---|---|---|---|
| | | | | | | | | |
| | | | | | | | | |
| | | | | | | | | |
| | | | | | | | | |
| | | | | | | | | |
| | | | | | | | | |
| | | | | | | | | |
| | | | | | | | | |
| | | | | | | | | |
| | | | | | | | | |
| | | | | | | | | |
| | | | | | | | | |
| | | | | | | | | |
| | | | | | | | | |
| | | | | | | | | |
| | | | | | | | | |
| | | | | | | | | |
| | | | | | | | | |
| | | | | | | | | |
| | | | | | | | | |
| | | | | | | | | |
| | | | | | | | | |
| | | | | | | | | |
| | | | | | | | | |
| | | | | | | | | |
| | | | | | | | | |
| | | | | | | | | |
| | | | | | | | | |
| | | | | | | | | |

TORO®