Form No. 3325-102

TORO®

ProLine 21-inch Recycler® II

Walk Power Lawn Mower

Model No. 22043—210000001 and Up

Operator's Manual

Domestic English (EN)

Contents

	Page
Introduction	2
Safety	3
General Lawn Mower Safety	3
Safety and Instruction Decals	5
Assembly	6
Installing the Handle	6
Installing the Fuel Tank and the Fuel Line	6
Installing the Air Cleaner Cover	7
Installing the Discharge Tunnel Plug	7
Before Starting	7
Mixing Gasoline and Oil	7
Operation	8
Controls	9
Starting the Engine	9
Stopping the Engine	9
Operating the Blade and the Self-Propel Drive	9
Using the Discharge Tunnel Plug	10
Checking the Blade Brake Clutch	10
Adjusting the Cutting Height	11
Using the Grass Bag	12
Operating Tips	13
Maintenance	14
Recommended Maintenance Schedule	14
Checking the Blade Brake Clutch	15
Cleaning the Underside of the Lawn Mower Housing	15
Cleaning the Discharge Tunnel and Plug	16
Servicing the Air Cleaner	16
Servicing the Spark Plug	17
Lubricating the Pivot Arms	17
Maintaining the Cutting Blade	17
Cleaning the Blade Brake Clutch Shield	19
Cleaning under the Belt Cover	19
Cleaning the Cooling System	19
Adjusting the Throttle	19
Adjusting the Self-propel Drive	20
Cleaning the Muffler and the Exhaust Port	20
Lubricating the Gear Case	21
Adjusting the Blade Brake Cable	21
Replacing the Fuel Filter	22
Servicing the Wheels	22
Emptying the Fuel Tank	23
Storage	23
Preparing the Fuel System	23
Preparing the Engine	23
General Information	23
Accessories	23
Troubleshooting	24
Federal Emission Control Warranty Statement	26
The Toro Total Coverage Guarantee	28

Warning

The engine exhaust from this product contains chemicals known to the State of California to cause cancer, birth defects, or other reproductive harm.

Introduction

Read this manual carefully to learn how to operate and maintain your product properly. The information in this manual can help you and others avoid injury and product damage. Although Toro designs and produces safe products, you are responsible for operating the product properly and safely.

Whenever you need service, genuine Toro parts, or additional information, contact an Authorized Service Dealer or Toro Customer Service and have the model and serial numbers of your product ready. Figure 1 illustrates the location of the model and serial numbers on the product.

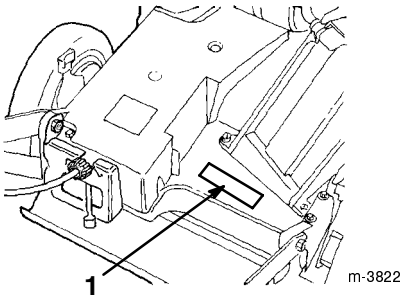

Figure 1

1. Location of the model and serial numbers

Write the product model and serial numbers in the space below:

Model No. _____

Serial No. _____

This manual identifies potential hazards and has special safety messages that help you and others avoid personal injury and even death. ***Danger***, ***Warning***, and ***Caution*** are signal words used to identify the level of hazard. However, regardless of the hazard, be extremely careful.

© 2000 by The Toro Company
8111 Lyndale Avenue South
Bloomington, MN 55420-1196

All Rights Reserved
Printed in the USA

Danger signals an extreme hazard that *will* cause serious injury or death if you do not follow the recommended precautions.

Warning signals a hazard that *may* cause serious injury or death if you do not follow the recommended precautions.

Caution signals a hazard that may cause minor or moderate injury if you do not follow the recommended precautions.

This manual uses two other words to highlight information. **Important** calls attention to special mechanical information and **Note:** emphasizes general information worthy of special attention.

Safety

This lawn mower meets or exceeds the CPSC blade safety requirements for walk-behind rotary lawn mowers and the B71.4 specifications of the American National Standards Institute in effect at the time of production.

Improperly using or maintaining this lawn mower can result in injury. To reduce the potential for injury, comply with these safety instructions.

Toro designed and tested this lawn mower for to offer reasonably safe service; however, *failure to comply with the following instructions may result in personal injury.*

Warning

Engine exhaust contains carbon monoxide, an odorless, deadly poison that can kill you.

Do not run the engine indoors or in an enclosed area.

To ensure maximum safety, best performance, and to gain knowledge of the product, it is essential that you and any other operator of the lawn mower read and understand the contents of this manual before the engine is ever started. Pay particular attention to the safety alert symbol ⚠ which means *caution*, *warning*, or *danger* — "personal safety instruction." Read and understand the instruction because it has to do with safety. Failure to comply with the instruction may result in personal injury.

General Lawn Mower Safety

This lawn mower is capable of amputating hands and feet and of throwing objects. Failure to observe the following safety instructions could result in serious injury or death.

Training

- Read this operator's manual carefully. Be thoroughly familiar with the controls and the proper use of the lawn mower before starting it.
- Never allow children or people unfamiliar with these instructions to operate the lawn mower. Local regulations may restrict the age of the operator.
- Never mow while people (especially children) or pets are nearby. Stop the lawn mower if anyone enters the area.
- Tragic accidents can occur if the operator is not alert to the presence of children. Children are often attracted to the lawn mower and the mowing activity. Never assume that children will remain where you last saw them.
- Keep children out of the mowing area and under the watchful care of a responsible adult.
- Be alert and turn the lawn mower off if children enter the area.
- Use extra care when approaching blind corners, shrubs, trees, or other objects that may obscure vision.
- Keep in mind that the operator or user is responsible for accidents or hazards occurring to other people or their property.
- See the manufacturer's instructions for proper operation and installation of accessories. Use only the accessories that are approved by the manufacturer.

Preparation

- Thoroughly inspect the area where you will use the lawn mower, and remove all stones, sticks, wires, bones, and other foreign objects.
- While mowing, always wear substantial footwear and long trousers.
- Do not operate the lawn mower when barefoot or wearing open sandals.
- Always wear safety goggles or safety glasses with side shields when operating the lawn mower.
- Warning: Gasoline is highly flammable. Take the following precautions:
  - Store fuel in containers specifically designed for this purpose.
  - Refuel outdoors only and do not smoke while refuelling.
  - Add fuel before starting the engine. Never remove the cap of the fuel tank or add gasoline while the engine is running or when the engine is hot.

- If gasoline is spilled, do not attempt to start the engine. Move the lawn mower away from the area of spillage to avoid creating any source of ignition until the gasoline vapors have dissipated.
- Replace all fuel tank and container caps securely.
- If you must drain the fuel from the fuel tank, do it outdoors.

- Replace faulty mufflers.
- Before using, always visually inspect the blades, blade bolts, and cutter assembly for wear or damage. Replace worn or damaged blades and bolts in sets to preserve balance.
- On multibladed lawn mowers, use care as rotating one blade can cause the other blades to rotate.

Operation

- Do not operate the engine in a confined space where dangerous carbon monoxide fumes can collect.
- Mow only in daylight or in good artificial light.
- Always be sure of your footing on slopes.
- Walk; never run.
- Keep a firm hold on the handle.
- For wheeled rotary lawn mowers, mow across the face of slopes, never up and down.
- Exercise extreme caution when changing the direction on slopes.
- Do not mow excessively steep slopes.
- Use extreme caution when reversing or pulling the lawn mower toward you.
- Before and while moving backward, look behind and down for small children.
- Stop the blade(s) if you must tilt the lawn mower for transportation when crossing surfaces other than grass and when transporting the lawn mower to and from the area to be mowed.
- Never operate the lawn mower with damaged or missing guards or shields, or without safety devices (such as deflectors and grass catchers) in place.
- Do not change the speed settings on the engine.
- Disengage all blade and drive clutches before starting the engine.
- Start the engine carefully according to instructions and with feet well away from the blade(s).
- Do not tilt the lawn mower when starting the engine, unless you must tilt the lawn mower to start it. In this case, do not tilt it more than absolutely necessary and lift only the part which is away from the operator.
- Do not start the engine when standing in front of the discharge chute.
- Do not put your hands or feet near or under rotating parts. Keep clear of the discharge opening at all times.
- Never pick up or carry a lawn mower while the engine is running.
- Stop the engine and disconnect the spark-plug wire:
  - before clearing blockages or unclogging the chute;
  - before checking, cleaning, or working on the lawn mower;
  - after striking a foreign object. Inspect the lawn mower for damage and make repairs before starting and operating the lawn mower; and
  - if the lawn mower starts to vibrate abnormally (check it immediately).
- Stop the engine:
  - whenever you leave the lawn mower; and
  - before refuelling.
- Reduce the throttle setting during engine run-out and, if the engine has a shutoff valve, turn the fuel off after mowing.
- Stop the blade(s) when crossing gravel drives, walks, or roads.
- Shut the engine off and wait until the blade comes to a complete stop before removing the grass catcher.
- Do not operate the lawn mower while under the influence of alcohol or drugs.
- If the lawn mower should start to vibrate abnormally, stop the engine and check immediately for the cause. Vibration is generally a warning of trouble.

Slopes are a major factor related to slip and fall accidents which can result in a severe injury. If you feel uneasy on a slope, do not mow it.

- Watch for holes, ruts, or bumps. Tall grass can hide obstacles.
- Do not mow near drop-offs, ditches, or embankments. You could lose your footing or balance.
- Do not mow on wet grass. Reduced footing could cause slipping.

Maintenance and Storage

- Keep all nuts, bolts (especially blade attachment bolts), and screws tight to ensure that the lawn mower is in safe working condition.
- Never store the lawn mower with gasoline in the tank inside a building where fumes may reach an open flame or spark.
- Allow the engine to cool before storing the lawn mower in any enclosure.
- To reduce the fire hazard, keep the engine, muffler, battery compartment, and gasoline storage area free of grass, leaves, or excessive grease.
- Check the grass catcher frequently for wear or deterioration.
- Replace worn or damaged parts.
- Use extra care when handling gasoline; gasoline vapors are explosive.
- Never tamper with safety devices. Check their proper operation regularly.
- Keep the lawn mower free of grass, leaves, or other debris buildup. Clean up any oil or fuel that spills.
- Stop and inspect the lawn mower if you strike an object. Repair the lawn mower, if necessary, before starting the engine.
- Never attempt to make wheel height adjustments while the engine is running.
- Grass catcher components are subject to wear, damage, and deterioration, which could expose moving parts or allow objects to be thrown. Frequently check the components and replace them with the manufacturer's recommended parts when necessary.
- Lawn mower blades are sharp and can cut. Wrap the blade(s) or wear gloves, and use extra caution when servicing them.
- Do not change the speed settings on the engine.
- If you must drain the fuel from the fuel tank, do it outdoors.
- To ensure the best performance and safety, purchase only genuine Toro replacement parts and accessories.
- Maintain or replace safety and instruction decals when necessary.

Safety and Instruction Decals

Safety decals and instructions are easily visible to the operator and are located near any area of potential danger. Replace any decal that is damaged or lost.

On Discharge Tunnel (Part No. 93-7398)

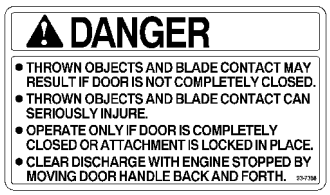

On Engine (Part No. 62-7600)

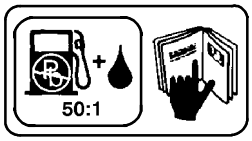

On Mower Housing (Part No. 43-8480)



On Belt Cover (Part No. 52-2620)

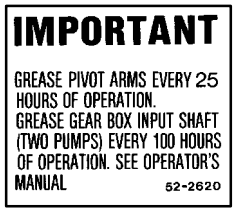

On Control Panel (Part No. 85-6730)



On Handle (Part No. 98-4387)

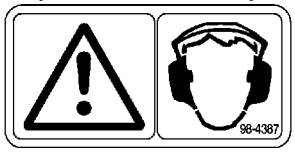

On Rear of Control Panel (Part No. 63-9060)



Assembly

Note: Determine the left and right sides of the machine from the normal operating position.

Installing the Handle

1. Mount the handle to the outside of the lawn mower housing (using the bottom hole) with two 5/16-18 x 1-1/4 in. (8 mm x 31 mm) cap screws, washers, and thin nylon insert locknuts.
2. Secure the handle latches to the handle with two 5/16–18 x 1-1/2 in. (8 mm x 38 mm) cap screws, washers, and nylon insert locknuts (Fig. 2). Position the locknuts and the washers on the inside of the handle.

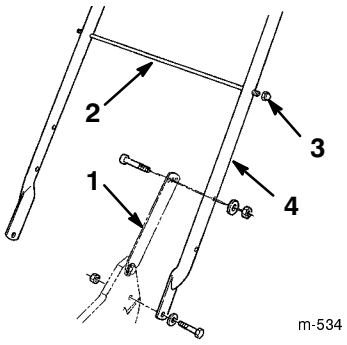

Figure 2

1. Handle latch
2. Bag support rod
3. Cap locknut
4. Handle

Note: You can adjust the handle height for comfortable operation. Stand behind the handle to determine the height. To adjust the handle height, position the cap screws and the locknuts that secure the handle latches to the handle into the other mounting holes in the latches.

3. Slide the bag support rod through the **top** mounting holes in the handle and secure each end with a cap locknut (Fig. 2).
4. Use a cable tie to secure the control cables to the left handle below the bag support rod.

Installing the Fuel Tank and the Fuel Line

1. Start the two self-tapping screws into the bottom of the fuel tank and then remove the screws (Fig. 3).

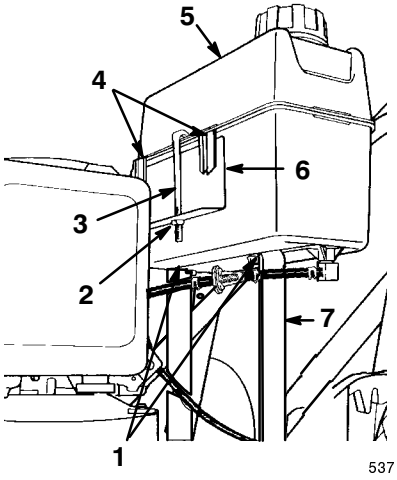

Figure 3

1. Self-tapping screws
2. Locknut
3. Fuel tank retainer
4. Plastic clips
5. Fuel tank
6. Fuel tank bracket
7. Tank base

2. Hook the plastic clips on the front of the fuel tank onto the fuel tank bracket (Fig. 3).
3. Secure the fuel tank to the tank base with the two self-tapping screws (Fig. 3). *Do not overtighten the screws.*
4. Hook the fuel tank retainer onto the rear of the fuel tank, and slide the end of the retainer into the hole in the fuel tank bracket (Fig. 3).
5. Secure the retainer to the tank bracket with a locknut (Fig. 3). *Do not overtighten the locknut.*
6. Remove the red cap from the end of the fuel line and from the end of the elbow fitting on the fuel tank (Fig. 4).

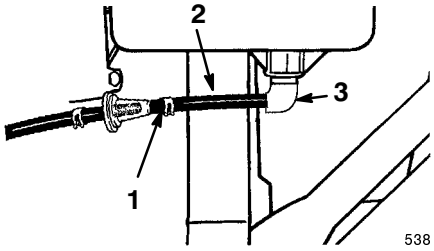

Figure 4

1. Fuel line clamp
2. Fuel line
3. Elbow fitting

7. Slide the end of the fuel line onto the elbow fitting (Fig. 4).
8. Secure the fuel line in place with the fuel line clamp (Fig. 4).

Installing the Air Cleaner Cover

1. Insert the bottom tabs of the air cleaner cover into the slots (Fig. 5).

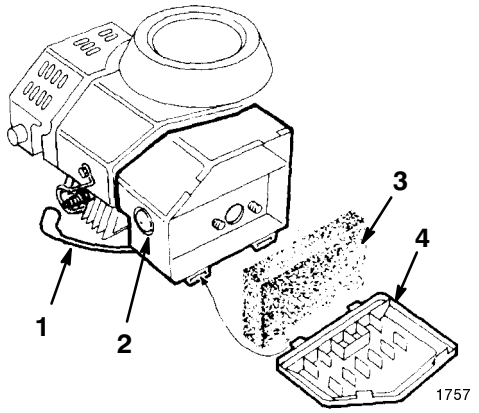

Figure 5

1. Spark-plug wire
2. Primer
3. Foam element
4. Cover

2. Rotate the cover upward and snap it into place (Fig. 5).

Installing the Discharge Tunnel Plug

1. Open the discharge door by pulling forward on the handle and moving it rearward (Fig. 6). Hold the discharge door handle to prevent the spring-loaded door from closing while you insert the plug.

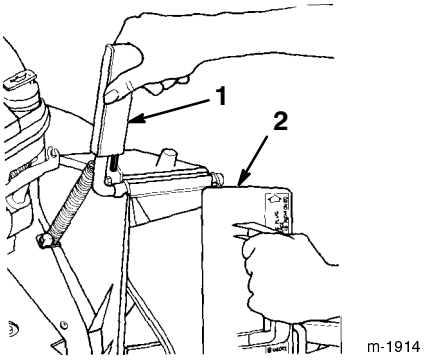

Figure 6

1. Discharge door handle
2. Plug rotated clockwise

2. Since the plug is slightly wider than the discharge tunnel opening, rotate the plug clockwise slightly while inserting it (Fig. 6).

   Note: Ensure that the arrow on the plug decal points upward.

3. Push the plug all the way in until the spring clip on the bottom of the plug clicks into place, locking the plug securely into the discharge tunnel (Fig. 7).

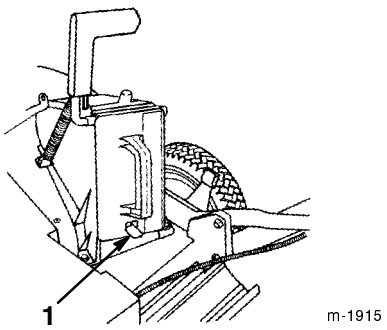

Figure 7

1. Spring clip

4. Release the discharge door handle to lock the top of the plug.

Before Starting

Mixing Gasoline and Oil

Your Toro lawn mower is powered by a two-cycle engine that requires a 50:1 gasoline-to-oil mixture.

Use only clean, fresh, unleaded gasoline (including oxygenated or reformulated gasoline) with an octane rating of 87 or higher. To ensure freshness, purchase only the amount of gasoline you expect to use in 30 days. Using unleaded gasoline reduces combustion chamber deposits and promotes longer spark plug life.

Important Do not use methanol, gasoline containing methanol, gasohol containing more than 10% ethanol, premium gasoline, or white gas. Using these fuels can damage the fuel system.

Important Do not use an automotive oil (such as SAE 30 or SAE 10W30), a two-cycle oil that is not NMMA- or TCW-certified, or a fuel mixed at the wrong gasoline-to-oil ratio. This can cause engine damage not covered under the Toro warranty.

Danger

In certain conditions, gasoline is extremely flammable and highly explosive. A fire or explosion from gasoline can burn you and others and cause property damage.

- **Fill the fuel tank outdoors, in an open area, and when the engine is cold. Wipe up any gasoline that spills.**
- **Do not fill the fuel tank completely full. Add gasoline to the fuel tank until the level is 1/4 to 1/2 in. (6 to 13 mm) below the bottom of the filler neck. This empty space in the tank allows the gasoline to expand.**
- **Never smoke when handling gasoline, and stay away from an open flame or where a spark may ignite gasoline fumes.**
- **Store gasoline in an approved fuel container and keep it out of the reach of children.**
- **Never buy more than a 30-day supply of gasoline.**

Danger

When fueling, under certain circumstances, a static charge can develop, igniting the gasoline. A fire or explosion from gasoline can burn you and others and cause property damage.

- **Always place fuel containers on the ground and away from your vehicle before filling.**
- **Do not fill fuel containers inside a vehicle or on a truck or trailer bed because interior carpets or plastic truck bed liners may insulate the container and slow the loss of any static charge.**
- **When practical, remove gas-powered equipment from the truck or trailer and refuel the equipment with its wheels on the ground.**
- **If this is not possible, then refuel such equipment on a truck or trailer from a portable container, not from a gasoline dispenser nozzle.**
- **If you must use a gasoline dispenser nozzle, keep the nozzle in contact with the rim of the fuel tank or container opening at all times until fueling is complete.**

Note: Use a fuel stabilizer/conditioner for all Toro gasoline-powered products during operation and storage. A fuel stabilizer/conditioner cleans the engine during operation and prevents gum-like varnish deposits from forming in the engine during storage. A fuel stabilizer/conditioner works best when you mix it with fresh gasoline. If you use *Toro 50:1 All Season 2-Cycle Engine Oil with Fuel Stabilizer*, you do not need to add a fuel stabilizer/conditioner.

Important Do not use fuel additives except a fuel stabilizer during storage. Do not use fuel stabilizers with an alcohol base such as ethanol, methanol, or isopropanol.

1. Pour a half gallon (1.9 liters) of fresh unleaded gasoline into an approved fuel container.

Note: Do not mix gasoline and oil in the fuel tank of the lawn mower. Oil at room temperature mixes easier and more thoroughly than cold oil. Oil below 32°F (0°C) requires additional mixing.

2. Add the full amount of *Toro 50:1 All Season 2-Cycle Engine Oil with Fuel Stabilizer* or an equivalent high grade, NMMA- or TCW-certified two-cycle oil to the gasoline according to the chart below:

50:1 Gasoline-to-Oil Ratio Mixing Chart	
Gasoline	Oil
1 gallon (3.8 liters)	2.6 ounces (77 ml)
2 gallons (7.6 liters)	5.2 ounces (154 ml)
5 gallons (18.9 liters)	13 ounces (384 ml)

3. Install the cap on the fuel container.
4. Shake the container to mix the gasoline and oil thoroughly.
5. Slowly remove the cap and add the remaining amount of gasoline.

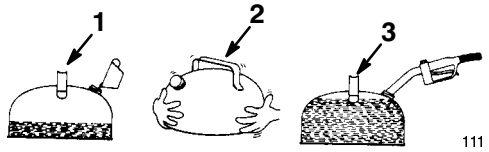

Figure 8

1. Add oil to a half gallon of gasoline
2. Install the cap and shake the can to mix
3. Add the remaining amount of gasoline

Operation

Note: Determine the left and right sides of the machine from the normal operating position.

Each time before you mow, ensure that the blade brake, the self-propel drive, and the control bar function properly. When you release the control bar, the blade and self-propel drive should stop. If they do not, contact an Authorized Service Dealer.

Caution

This machine produces sound levels in excess of 85dBA at the operator's ear and can cause hearing loss through extended periods of exposure.

Wear hearing protection when operating this machine.

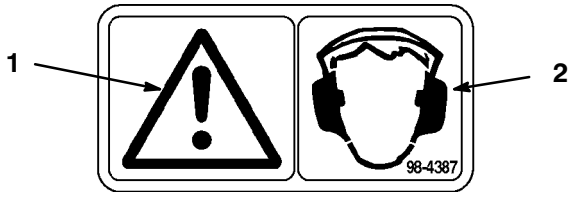

Figure 9

1. Caution
2. Wear hearing protection

Controls

The throttle control and the blade/self-propel control bar are on the upper handle (Fig. 10).

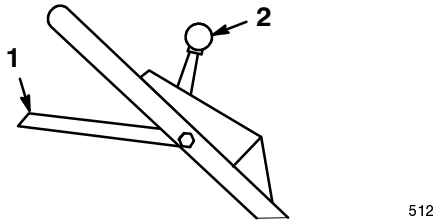

Figure 10

1. Blade/self-propel control bar
2. Throttle control

The ground speed control is located at the rear of the belt cover (Fig. 11).

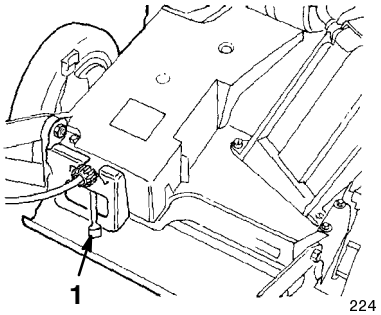

Figure 11

1. Ground speed control

Note: The recoil starter is on top of the engine.

Starting the Engine

1. Connect the wire to the spark plug (Fig. 5).
2. Move the ground speed control to the *Neutral* position and the throttle to the (*Choke*) position.
3. Cover the hole in the center of the primer (Fig. 5) with your thumb and push it in once.
4. With your foot on the lawn mower housing, pull the recoil starter out until you feel resistance; then pull it vigorously to start the engine.
5. Regulate the throttle and the ground speed control as desired when the engine starts.

Note: You may not need to move the throttle to the (*Choke*) position when you start a warm engine.

Stopping the Engine

1. Release the control bar and move the throttle to the (*Off*) position.
2. Disconnect the wire from the spark plug if you do not use the lawn mower or if you leave it unattended.

Operating the Blade and the Self-Propel Drive

1. Have the control bar in the *A* position (Fig. 12).

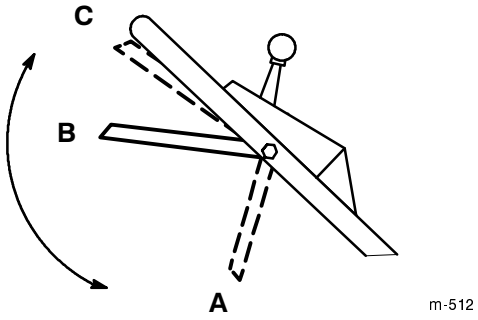

Figure 12

2. Slide the control bar to the right and raise it to the *B* position to engage the blade (Fig. 12).
3. Squeeze the control bar against the handle to the *C* position to drive (Fig. 12).

Note: To disengage the traction drive but keep the blade engaged, gradually release the control bar to the *B* position. To self-propel with the blade disengaged, squeeze the control bar against handle to the *C* position without sliding the control bar to the right.

Using the Discharge Tunnel Plug

1. Stop the engine and wait for all moving parts to stop.
2. Insert the plug; refer to *Installing the Discharge Tunnel Plug* on page 7.
3. To remove the plug, move the discharge door handle rearward and lift up the spring clip on the bottom of the plug. When the plug is unlocked, pull it out of the discharge tunnel.

Note: When grass is thick and lush, clippings may collect on and around the discharge tunnel plug. This may make removing the plug difficult. Clean the plug thoroughly after each use.

Checking the Blade Brake Clutch

Check the control bar before each use to ensure that the blade brake clutch (BBC) system is operating properly.

Normal Test

1. Stop the engine and wait for all moving parts to stop.
2. Move the lawn mower onto a paved surface in a non-windy area.
3. Set all four wheels in to the 2-3/4 in. (70 mm) cutting height setting (Fig. 19).
4. Set the ground speed selector to the *N* (*Neutral*) position.
5. Take a half sheet of newspaper and crumple it into a ball small enough to go under the deck (about three inches or 76 mm in diameter) as shown in Figure 13.

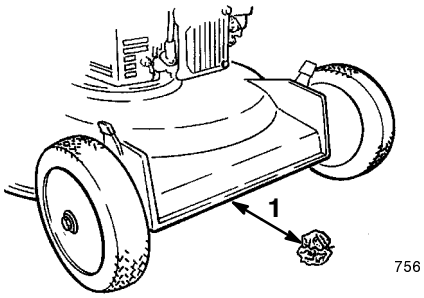

Figure 13

1. 5 in. (12.7 cm)

6. Place the ball of newspaper five inches (12.7 cm) in front of the lawn mower (Fig. 13).
7. Start the engine.
8. Move the control bar down to its lowest position (Fig. 14).

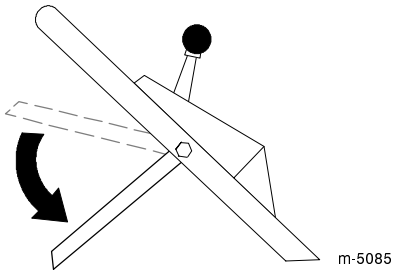

Figure 14

9. Lift the control bar up to about one inch (2.5 cm) below the handle; refer to position *A* in Figure 15.

   Note: The fan-like noise indicates that the lawn mower blade is turning.

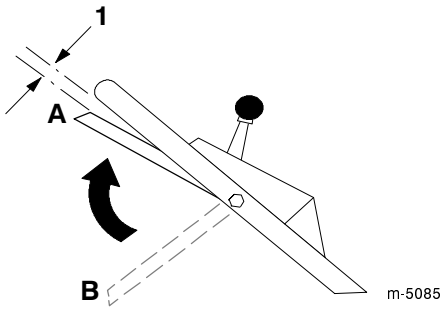

Figure 15

1. 1 in. (2.5 cm)

10. Release the control bar; refer to position *B* in Figure 16. You should hear a “bang.” The blade should stop in three seconds.

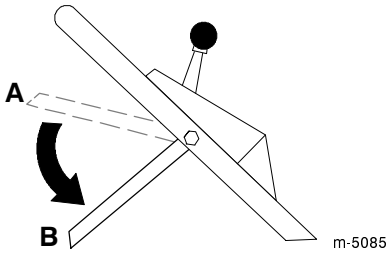

Figure 16

11. Immediately push the lawn mower over the newspaper ball.
12. Stop the engine and wait for all moving parts to stop.
13. Walk around the lawn mower to check for the newspaper ball. If the ball did not go under the deck, repeat steps 6 through 12.

14. Pull the lawn mower away from the newspaper. If the newspaper ball unravels or is shredded, the blade has not properly stopped, resulting in an unsafe operating condition. Contact an Authorized Service Dealer.

To check for a problem with the BBC system **before** it affects its normal operation, you can perform the *Special Test* that follows.

Special Test

1. Follow steps 1 through 7 from the *Normal Test* on page 10.
2. Move the control bar down to its lowest position (Position *B* in Fig. 16).
3. Bring the control bar up into the middle position about five inches (12.7 cm) below the handle cross bar (Position *C* in Fig. 17).

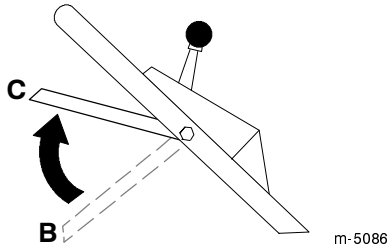

Figure 17

Note: This intermediate position (*C*) is not the normal operating position of the control bar. However, it helps to detect a sticking BBC system early enough to prevent an unsafe condition later.

4. Release the control bar (Position *B* in Fig. 17).

Note: If you hear a loud "bang," you have raised the control bar too high. Repeat steps 2 through 4 above, but do not raise the control bar as high as in step 3.

5. Immediately push the lawn mower over the newspaper ball.
6. Stop the engine and wait for all moving parts to stop.
7. Walk around the lawn mower to check for the newspaper ball. If the ball did not go under the deck:

   A. Place the ball of newspaper five inches (12.7 cm) in front of the lawn mower (Fig. 13).

   B. Start the engine.

   C. Follow steps 2 through 6 above.

8. Pull the lawn mower away from the newspaper. If the newspaper ball unravels or is shredded, the BBC system could be deteriorating to the point where it could result in an unsafe operating condition. Contact an Authorized Service Dealer for an inspection and repair of your lawn mower.

Danger

If the blade brake clutch system is inoperative, the blade will continue to rotate when you release the control bar. Contact with blade could occur, causing serious injury.

- **Check the BBC operation before each use.**
- **Never use a BBC-equipped lawn mower with an inoperative safety system.**
- **Take your lawn mower to an Authorized Service Dealer for repair if the safety system fails to operate properly.**

Test Using the Grass Bag

You can use the grass bag to perform an additional test to check the blade brake clutch mechanism:

1. Install the empty grass bag on the discharge tunnel.
2. Start the engine.
3. Push the control bar (Fig. 14) down to its lowest position.
4. Lift the control bar to the normal blade engaged position about one inch (2.5 cm) below the handle. The bag should begin to inflate, indicating that the blade is engaged and rotating.
5. Release the control bar. If the bag does not immediately deflate, it indicates that the blade is still rotating. The blade brake clutch mechanism may be deteriorating, and, if ignored, could result in an unsafe operating condition. Have the lawn mower inspected and serviced by an Authorized Service Dealer.

Adjusting the Cutting Height

The cutting height is adjustable from approximately 3/4 to 3-1/4 inches (19 to 83 mm) in 1/2-inch (12.7 mm) increments (Fig. 18). Moving the cutting height adjuster forward raises the cutting height.

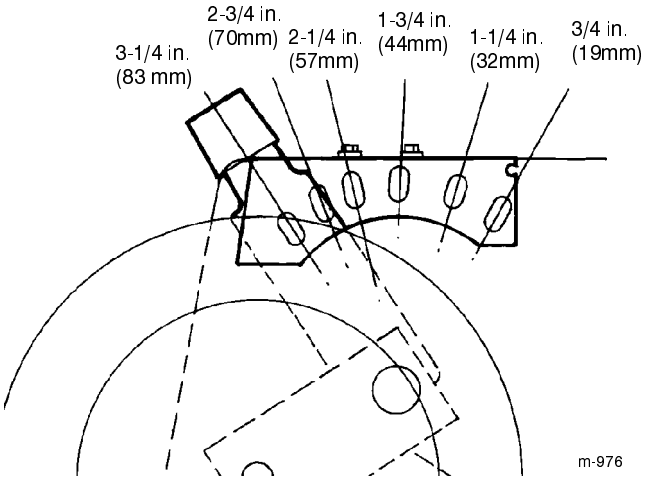

Figure 18

Danger

Adjusting the cutting height levers could bring your hands into contact with a moving blade and result in serious injury.

- **Stop the engine and wait for all movement to stop before adjusting the cutting height.**
- **Do not put your fingers under the housing when adjusting the cutting height.**

1. Stop the engine and wait for all moving parts to stop.
2. Lift up the housing so that the wheel is off the ground. **Do not place your hands under the deck to lift up the housing.**
3. Squeeze the cutting height adjuster lever toward the wheel (Fig. 19) and move it to the desired setting.

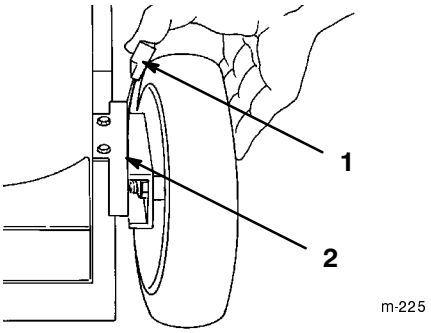

Figure 19

1. Cutting height adjuster lever
2. Housing wear plate

Note: Ensure that the pin on the adjusting lever engages the notch in the lawn mower housing wear plate.

4. Adjust all the wheels to the same cutting height setting.

Using the Grass Bag

Occasionally, you may wish to use the grass bag for bagging extra long grass, lush grass, or leaves.

Installing the Grass Bag

1. Stop the engine and wait for all moving parts to stop.
2. Ensure that the discharge door handle is fully forward and that the pin is engaged in the catch (Fig. 20).

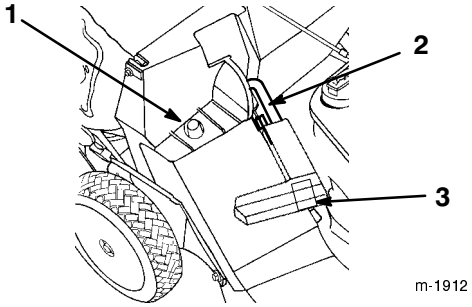

Figure 20

1. Bag frame on retaining post
2. Pin engaged in catch
3. Handle fully forward. Discharge door closed.

3. Slide the hole in the bag frame onto the retaining post on the discharge tunnel (Fig. 20).
4. Set the rear of the bag frame onto the bag support rod.
5. Pull the discharge door handle forward until the pin clears the catch, and move the handle rearward until the pin locks in the bag notch (Fig. 21).

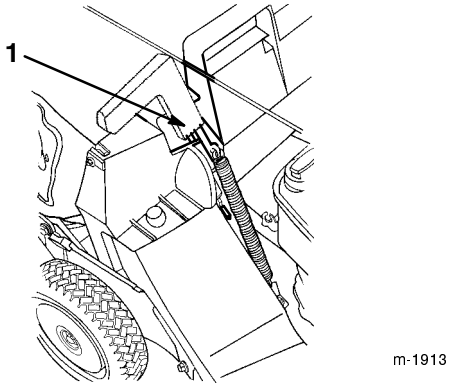

Figure 21

1. Pin locked in bag notch

Note: The discharge door in the lawn mower housing is now open.

Mowing with the Grass Bag

Warning

A worn grass bag could allow small stones and other similar debris to be thrown in the operator's or bystander's direction and result in serious personal injury or death to the operator or bystanders.

Check the grass bag frequently. If it is damaged, install a new Toro replacement bag.

Cut the grass until the bag is full.

Important Do not overfill the bag.

Removing the Grass Bag

1. Stop the engine and wait for all moving parts to stop.
2. Raise the discharge door handle and move it forward to engage the pin with the catch (Fig. 20).
3. Grasp the handles at the front and the rear of the bag and lift the bag off the lawn mower.
4. Gradually tip the bag forward to empty the clippings.
5. To install the bag, refer to *Installing the Grass Bag* on page 12.

Danger

If the discharge door does not close completely, the lawn mower could throw objects, causing serious personal injury or death.

If you cannot close the door because the grass clippings clog the discharge area, stop the engine and gently move the discharge door handle back and forth until you can close the door completely. If you still cannot close the door, remove the obstruction with a stick, not your hand.

Danger

The lawn mower can throw grass clippings and other objects through an open discharge tunnel. Objects thrown with enough force could cause serious personal injury or death to the operator or bystander.

Never open the door on the discharge tunnel when the engine is running.

Operating Tips

- Review the safety instructions and read this manual carefully before operating the lawn mower.
- Clear the area of sticks, stones, wire, branches, and other debris that the blade could hit and throw.
- Keep everyone, especially children and pets, away from the area of operation.
- Avoid striking trees, walls, curbs, or other solid objects. Never deliberately mow over any object.
- If the lawn mower strikes an object or starts to vibrate, immediately stop the engine, disconnect the wire from the spark plug, and examine the lawn mower for damage.
- Maintain a *sharp blade* throughout the cutting season. Periodically file down nicks on the blade.
- Replace the blade when necessary with an original Toro replacement blade.
- Mow only dry grass or leaves. Wet grass and leaves tend to clump on the yard and can cause the lawn mower to plug or the engine to stall.

Warning

Wet grass or leaves can cause you to slip, contact the blade, and seriously injure you.

Mow only in dry conditions.

- Clean the underside of the lawn mower deck after each mowing. See *Cleaning the Underside of the Lawn Mower Housing* on page 15.
- Keep the engine in good running condition.
- Set the engine speed to the fastest position for the best cutting results.

Warning

Operating a lawn mower with its engine running at a speed greater than the factory setting can cause the lawn mower to throw a part of the blade or engine into the operator's or bystander's area and result in serious personal injury or death.

- **Do not change the engine speed setting.**
- **If you suspect the engine speed is faster than normal, contact an Authorized Service Dealer.**

- Clean the air filter frequently. Mulching stirs up more clippings and dust which clogs the air filter and reduces engine performance.

Cutting Grass

- Grass grows at different rates at different times of the year. In the summer heat, it is best to cut grass at the 1-3/4 in. (44 mm), 2-1/4 in. (57 mm), or 2-3/4 in. (70 mm) cutting height settings. Cut only about a third of the grass blade at a time. Do not cut below the 1-3/4 in. (44 mm) setting unless the grass is sparse or it is late fall when grass growth begins to slow down.
- When cutting grass over six inches (15 cm) tall, first mow at the highest cutting height setting and walk slower; then mow again at a lower setting for the best lawn appearance. If the grass is too long and the leaves clump on top of the lawn, the lawn mower may plug and cause the engine to stall.
- Alternate the mowing direction. This helps disperse the clippings over the lawn for even fertilization.

If the finished lawn appearance is unsatisfactory, try one or more of the following:

- Sharpen the blade.
- Walk at a slower pace while mowing.
- Raise the cutting height on your lawn mower.
- Cut the grass more frequently.
- Overlap cutting swaths instead of cutting a full swath with each pass.
- Set the cutting height on the front wheels one notch lower than the rear wheels. For example, set the front wheels at 1-3/4 in. (44 mm) and the rear wheels at 2-1/4 in. (57 mm).

Cutting Leaves

- After cutting the lawn, ensure that half of the lawn shows through the cut leaf cover. You may need to make more than one pass over the leaves.
- For light leaf coverage, set all the wheels at the same cutting height setting.
- If there are more than five inches (12.7 cm) of leaves on the lawn, set the front cutting height one or two notches higher than the rear cutting height. This makes it easier to feed the leaves under the lawn mower deck.
- Slow down your mowing speed if the lawn mower does not cut the leaves finely enough.
- If you mow over oak leaves, you can add lime to the grass in the spring to reduce the acidity of the oak leaves.

Maintenance

Note: Determine the left and right sides of the machine from the normal operating position.

Recommended Maintenance Schedule

Maintenance Service Interval	Maintenance Procedure
Each Use	• Check the stopping time of the blade brake. The blade must stop within three seconds of releasing the bail; if it does not, contact an Authorized Service Dealer for repair. • Remove grass clippings and dirt from under the housing. • Clean the discharge tunnel and the discharge tunnel plug.
5 Hours	• Check the blade and the engine mounting fasteners. Tighten them if they are loose.
25 Hours	• Clean the air cleaner (Clean it more frequently in dusty or dirty conditions). • Inspect the spark plug and replace it if necessary. • Lubricate the pivot arms.
50 Hours	• Sharpen or replace the blade; maintain it more frequently if the edge dulls quickly in rough or in sandy conditions. • Clean the blade brake clutch shield. • Check for leaks in the fuel system and/or a deteriorating fuel hose. Replace parts if necessary. • Remove grass clippings and debris from under the belt cover.

Maintenance Service Interval	Maintenance Procedure
75 Hours	• Clean the cooling system. • Adjust the throttle. • Adjust the self-propel drive system. • Clean the muffler and the exhaust port.
100 Hours	• Lubricate the gear case. • Adjust the blade brake cable. • Replace the fuel filter. • Service the wheels.
Storage	• Empty the fuel tank before repairs as directed or before storage.

Important Refer to your engine operator's manual for additional maintenance procedures.

Caution

If you leave the wire on the spark plug, someone could accidently start the engine and seriously injure you or other bystanders.

Disconnect the wire from the spark plug before you do any maintenance. Set the wire aside so that it does not accidently contact the spark plug.

Checking the Blade Brake Clutch

Refer to *Checking the Blade Brake Clutch* on page 10.

Cleaning the Underside of the Lawn Mower Housing

To ensure the best performance, keep the underside of the lawn mower housing clean. Be especially careful to keep the kickers free of debris (Fig. 22).

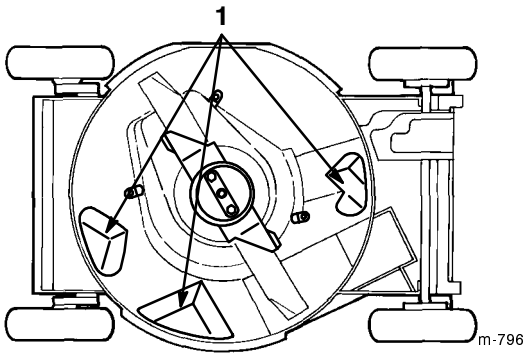

Figure 22

1. Kickers

Washing Method

1. Position the lawn mower on a flat concrete or asphalt surface near a garden hose.
2. Start the engine.
3. Hold the running garden hose at handle level and direct the water to flow on the ground just in front of the right rear tire (Fig. 23).

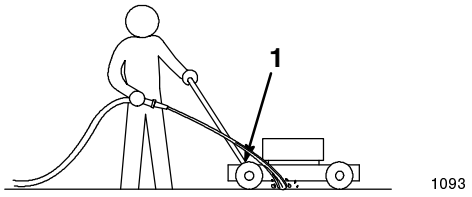

Figure 23

1. Rear right wheel

Note: The blade will draw in water and wash out clippings. Let the water run until you no longer see clippings being washed out from under the housing.

4. Stop the engine and wait for all moving parts to stop.
5. Turn off the garden hose.
6. Start the lawn mower and let it run for a few minutes to dry out the moisture on the lawn mower and its components.

Scraping Method

If washing does not remove all debris from under the lawn mower, scrape it clean.

1. Disconnect the wire from the spark plug (Fig. 5).
2. Drain the fuel from the fuel tank. Refer to steps 3 through 5 of *Emptying the Fuel Tank* on page 23.

Warning

Tipping the lawn mower may cause the fuel to leak from the carburetor or the fuel tank. Gasoline is extremely flammable, highly explosive, and, under certain conditions, can cause personal injury or property damage.

Avoid fuel spills by running the engine dry or by removing the gasoline with a hand pump; never siphon.

3. Tip the lawn mower onto its **right** side (Fig. 22).
4. Remove the dirt and grass clippings with a hardwood scraper. Avoid burrs and sharp edges.
5. Turn the lawn mower upright.
6. Fill the fuel tank.
7. Connect the wire to the spark plug.

Cleaning the Discharge Tunnel and Plug

Remove the plug from the discharge tunnel and clean it after each use.

Always be sure that the discharge tunnel door closes securely when you release the handle. If the debris prevents the discharge door from closing securely, clean the inside of the discharge tunnel and the door thoroughly.

Warning

Grass clippings and other objects can be thrown from an open discharge tunnel and cause serious injury or kill the operator or bystanders.

Never start or operate the lawn mower unless *one* of the following is true:

- **The discharge tunnel plug is locked securely in the discharge tunnel.**
- **The grass bag is locked in place.**
- **The optional side discharge chute is locked in place.**
- **The discharge tunnel door is locked in place.**

Servicing the Air Cleaner

Clean the air cleaner after every 25 operating hours. Clean it more frequently if you operate the lawn mower in dusty or dirty conditions.

1. Stop the engine and wait for all moving parts to stop.
2. Disconnect the wire from the spark plug (Fig. 5).
3. Lift the tabs at the top of the air cleaner cover and pivot the cover down (Fig. 5). Clean the cover thoroughly.
4. If the outside of the foam element is dirty, remove it from the air cleaner body. Clean the foam element thoroughly.
   A. Wash the foam element in a solution of liquid soap and warm water. Squeeze the foam element to remove dirt, but do not twist it because the foam may tear. Rinse the foam element thoroughly in clear water.
   B. Dry the foam element by wrapping it in a clean rag. Squeeze the rag and the foam element to dry.
   C. Saturate the element with engine oil. Squeeze the foam element to remove the excess oil and to distribute the oil thoroughly. A damp foam element is desirable.
5. Install the foam element and the air cleaner cover.

Important Do not operate the engine without the air cleaner element because extreme engine wear and damage will likely result.

Servicing the Spark Plug

Check the spark plug after every 25 operating hours. Use an *NGK BPMR4A* spark plug or equivalent.

1. Stop the engine and wait for all moving parts to stop.
2. Disconnect the wire from the spark plug (Fig. 5).
3. Clean around the spark plug.
4. Remove the spark plug from the cylinder head.

Important Replace a cracked, fouled, or dirty spark plug. Do not clean the electrodes because grit entering the cylinder can damage the engine.

5. Set the gap on the plug to 0.032 in. (0.81 mm) (Fig. 24).

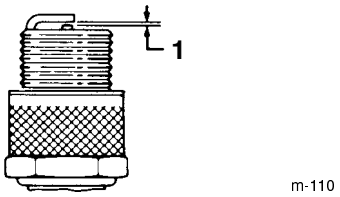

Figure 24

1. 0.032 in. (0.81 mm)

6. Install the spark plug and the gasket seal.
7. Torque the plug to 10 ft-lb (13.6 N·m).
8. Connect the wire to the spark plug.

Lubricating the Pivot Arms

After every 25 operating hours or when the season ends, lubricate the pivot arms.

1. Move the rear wheel cutting height levers to the center setting.
2. Wipe the grease fittings with a clean rag (Fig. 25).

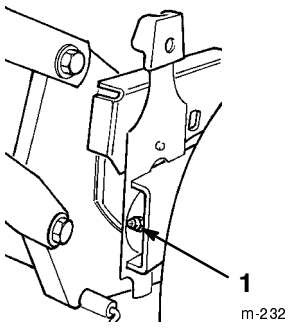

Figure 25

1. Grease fitting

3. Install a grease gun onto the fitting and gently apply two or three pumps of #2 multi-purpose lithium base grease (Fig. 25).

Note: Excessive grease pressure may damage the seals.

Maintaining the Cutting Blade

Always mow with a sharp blade. A sharp blade cuts cleanly and without tearing or shredding the grass blades.

1. Stop the engine and wait for all moving parts to stop.
2. Disconnect the wire from the spark plug (Fig. 5).
3. Drain the gasoline from the fuel tank; refer to steps 3 through 5 of *Emptying the Fuel Tank* on page 23.
4. Tip the lawn mower onto its **right** side (Fig. 26).

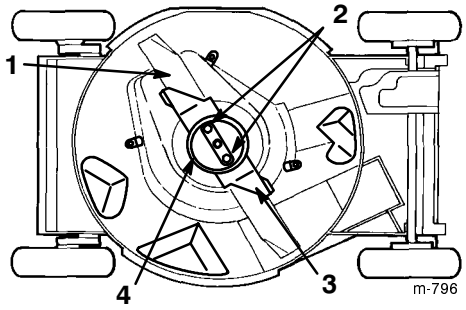

Figure 26

1. Blade
2. Blade nuts
3. Accelerator
4. Anti-scalp cup

Inspecting the Blade

Carefully examine the blade for sharpness and wear, especially where the flat and the curved parts meet (Fig. 27A). Because sand and abrasive material can wear away the metal that connects the flat and curved parts of the blade, check the blade before using the lawn mower. If you notice a slot or wear (Figs. 27B and 27C), replace the blade; refer to *Removing the Blade* on page 18.

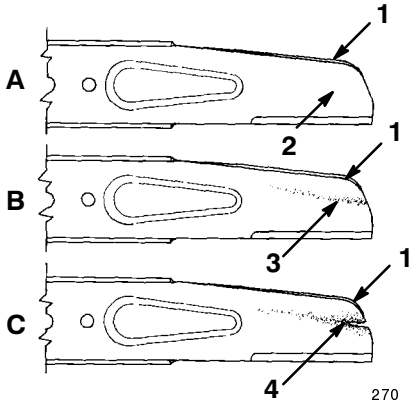

Figure 27

1. Sail
2. Flat part of blade
3. Wear
4. Slot formed

Note: For the best performance, install a new blade before the cutting season begins. During the year, file down any small nicks to maintain the cutting edge.

Danger

A worn or damaged blade can break, and a piece of the blade could be thrown into the operator's or bystander's area, resulting in serious personal injury or death.

- **Inspect the blade periodically for wear or damage.**
- **Replace a worn or damaged blade.**

Removing the Blade

Grasp the end of the blade using a rag or a thickly padded glove. Remove the blade nuts, the anti-scalp cup, the accelerator, and the blade (Fig. 26).

Sharpening the Blade

File the top side of the blade to maintain its original cutting angle (Fig. 28A) and inner cutting edge radius (Fig. 28B). The blade will remain balanced if you remove the same amount of material from both cutting edges.

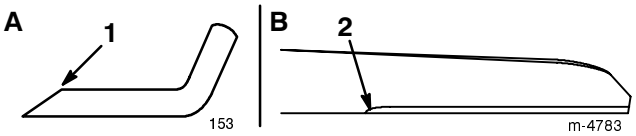

Figure 28

1. Sharpen at this angle only
2. Maintain the original radius here

Balancing the Blade

1. Check the balance of the blade by placing the center hole of the blade over a nail or screwdriver shank clamped horizontally in a vise (Fig. 29).

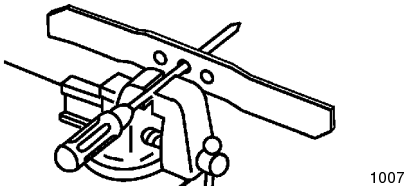

Figure 29

Note: You can also check the balance using a commercially manufactured blade balancer.

2. If either end of the blade rotates downward, file that end (not the cutting edge or the end near the cutting edge). The blade is properly balanced when neither end drops.

Installing the Blade

1. Install a sharp, balanced Toro blade, the accelerator, the anti-scalp cup, and the blade nuts. The sail of the blade must point toward the top of the lawn mower housing for proper installation. Torque the blade nuts to 15 to 27 ft-lb (20 to 37 N·m).

Warning

Operating the lawn mower without the accelerator in place can cause the blade to flex, bend, or break, resulting in serious injury or death to the operator or bystanders.

Do not operate the lawn mower without the accelerator.

2. Return the lawn mower to its upright position.
3. Connect the wire to the spark plug.

Cleaning the Blade Brake Clutch Shield

Clean the BBC (blade brake clutch) shield at the end of each mowing season to ensure the best performance and to prevent parts from degrading. Clean the BBC shield when you sharpen the blade because you need to remove the blade in order to remove the BBC shield.

1. Stop the engine and wait for all moving parts to stop.
2. Disconnect the wire from the spark plug (Fig. 5).
3. Drain the gasoline from the fuel tank; refer to Emptying the Fuel Tank on page 23.
4. Tip the lawn mower on its **right** side.

Warning

Tipping the lawn mower may cause the fuel to leak from the carburetor or the fuel tank. Gasoline is extremely flammable, highly explosive, and, under certain conditions, can cause personal injury or property damage.

Avoid fuel spills by running the engine dry or by removing the gasoline with a hand pump; never siphon.

5. Remove two blade nuts, the anti-scalp cup, the accelerator, and the blade (Fig. 26).
6. Loosen the tabs that secure the BBC shield to the deck by loosening the nuts or the bolts on the tabs (Fig. 30). Rotate the tabs 180° to move them out of the way.

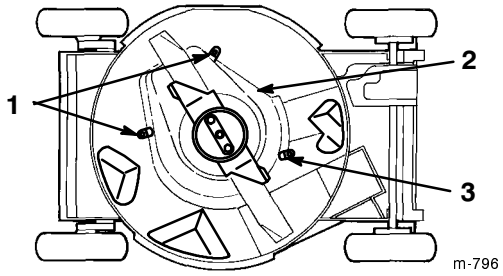

Figure 30

1. Tabs and nuts
2. BBC shield
3. Tab and bolt

7. Remove the BBC shield and brush or blow all the debris from under the shield and around the BBC system.
8. Install the BBC shield. Rotate the tabs 180° back into position. Tighten the nuts or the bolts on tabs to secure the BBC shield to the deck.
9. Install the blade, the accelerator, the anti-scalp cup, and the two blade nuts.
10. Turn the lawn mower upright.
11. Connect the wire to the spark plug.

Cleaning under the Belt Cover

Keep the area under the belt cover free of debris.

1. Stop the engine and wait for all moving parts to stop.
2. Remove the bolts that secure the belt cover (Fig. 31) to the lawn mower housing.

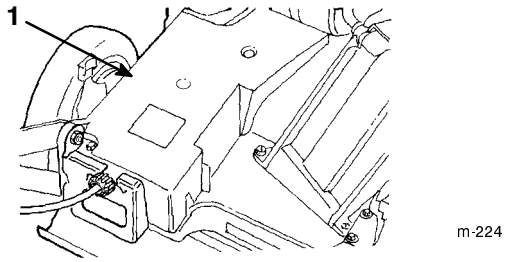

Figure 31

1. Belt cover

3. Lift off the cover and brush out all the debris around the belt area.
4. Install the belt cover.

Cleaning the Cooling System

After every 75 operating hours, clean the cylinder, the cylinder head fins, and around the carburetor and the linkage with a brush or an air hose. Remove debris from the air intake slots on the recoil housing. This ensures proper cooling and optimum engine performance.

Adjusting the Throttle

You may need to adjust the throttle control if the engine does not start. Whenever you install a new throttle control cable, adjust it.

1. Stop the engine and wait for all moving parts to stop.
2. Disconnect the wire from the spark plug (Fig. 5).
3. Move the throttle control to the (*Fast*) position.

4. Loosen the cable clamp screw until the throttle cable slides (Fig. 32).

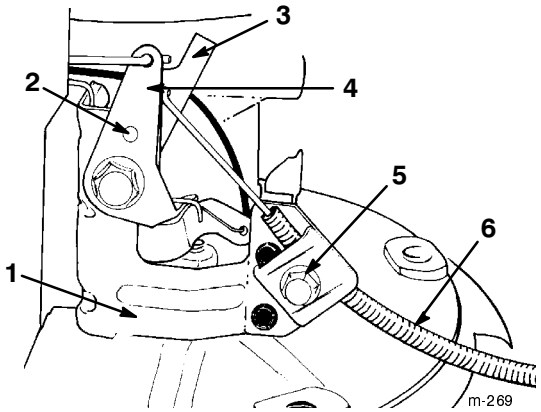

Figure 32

1. Throttle bracket
2. Aligned holes
3. Throttle lever
4. Choke lever
5. Cable clamp screw
6. Throttle cable

5. Ensure that the holes in the throttle bracket and the choke lever are aligned (Fig. 32). If not, follow the adjustment procedure in steps 6 through 9.
6. Insert a small-diameter pin into the aligned holes to hold the adjustment (Fig. 32).
7. Push the throttle cable until the throttle lever contacts the choke lever (Fig. 32).
8. Tighten cable clamp screw (Fig. 32).
9. Remove the pin.

Adjusting the Self-propel Drive

Self-propel Model only

If the lawn mower does not self-propel or has a tendency to creep forward when you disengage the drive, adjust the wheel drive control knob on the rear of the gear box.

1. Rotate the control knob clockwise 1/2 turn if the lawn mower does not self-propel. If the lawn mower creeps forward, rotate the knob 1/2 turn counterclockwise to loosen the belt (Fig. 33).

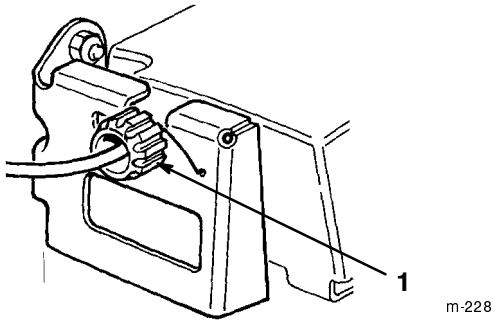

Figure 33

1. Control knob

2. Slowly pull the lawn mower backward while you gradually move the control bar toward the handle.

Note: The adjustment is correct when the rear wheels stop turning and the control bar is about one inch (2.5 cm) from the handle (Fig. 34).

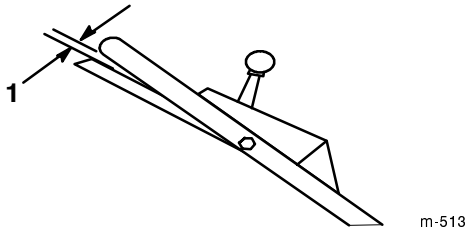

Figure 34

1. One inch (2.5 cm)

Cleaning the Muffler and the Exhaust Port

Clean the end of the muffler pipe and the exhaust port after every 75 hours of operation.

Caution

The muffler and the engine surface become hot when the lawn mower is in operation. Contact with the hot muffler surface can burn you.

Clean the muffler and the exhaust port only after the engine and the muffler are cool.

1. Stop the engine and wait for all moving parts to stop.
2. Disconnect the wire from the spark plug (Fig. 5).
3. Use a hardwood scraper to remove the carbon from the end of the muffler pipe (Fig. 35).

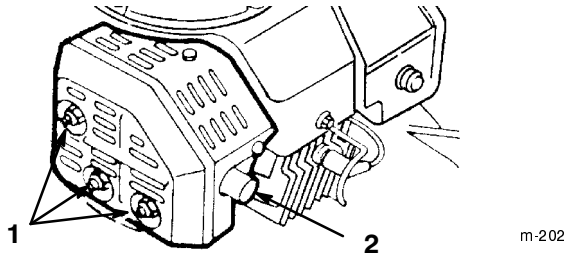

Figure 35

1. Screw, nuts, and lockwashers
2. Muffler pipe

4. Remove the screw, two nuts, and two lockwashers (Fig. 35).

5. Slide the muffler off the mounting pins.

6. Slowly pull the recoil starter so that the piston covers the exhaust port (Fig. 36).

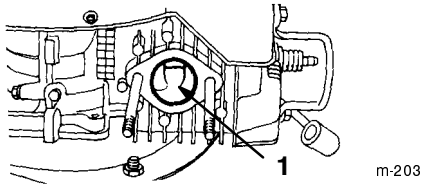

Figure 36

1. Exhaust port

7. Clean the carbon from the exhaust port (Fig. 36) with a flat hardwood scraper.

Important Do not use a metal scraper or a similar object to clean the exhaust port because it could damage the piston or the cylinder.

8. Install the muffler with the screw, two nuts, and two lockwashers (Fig. 36).

9. After cleaning the exhaust port, ensure that the muffler gasket is still usable.

Lubricating the Gear Case

After every 100 operating hours, grease the gear case.

1. Remove the grass bag.

2. Install a grease gun onto the fitting through the belt cover opening (Fig. 37).

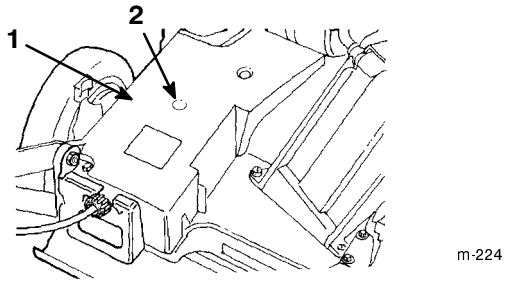

Figure 37

1. Belt cover
2. Grease fitting

3. Gently apply one to two pumps of #2 multi-purpose lithium-base grease.

4. Install the grass bag.

Adjusting the Blade Brake Cable

Whenever you install a new blade brake cable assembly or replace the belt, adjust the blade brake cable.

1. Stop the engine and wait for all moving parts to stop.

2. Disconnect the wire from the spark plug (Fig. 5).

3. Loosen the cable clamp screw until the brake cable conduit slides (Fig. 38).

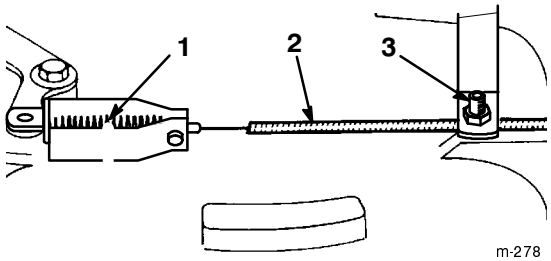

Figure 38

1. Spring
2. Cable conduit
3. Cable clamp screw

4. Pull the cable to the remove slack, but do not put tension on the spring. Tighten the cable clamp screw to lock the adjustment in place.

Warning

Do not overtighten the blade brake cable. Overtightening the blade brake cable could cause the blade brake to come off of the brake drum. If the brake does not contact the drum, the blade will not stop rotating when you release the control bar. A rotating blade could cause serious personal injury.

- **Each time you adjust the brake cable, ensure that the brake stops the blade in three seconds or less.**
- **If the blade does not stop rotating in three seconds or less, bring the lawn mower to an Authorized Service Dealer for inspection and repair.**

Replacing the Fuel Filter

Replace the fuel filter after every 100 operating hours or yearly. The best time to replace the fuel filter (Fig. 39) is when the fuel tank is empty. Never install a dirty fuel filter after you remove it from the fuel line.

1. Squeeze the ends of the hose clamps together and slide them away from the fuel filter (Fig. 39).

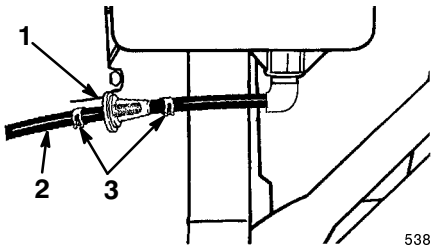

Figure 39

1. Fuel filter
2. Fuel line
3. Hose clamps

2. Remove the fuel filter from the fuel lines.
3. Install a new fuel filter and move the hose clamps close to the filter.

   Note: The flow arrow on the fuel filter must point toward the carburetor.

Servicing the Wheels

Removing the Wheels

1. Stop the engine and wait for all moving parts to stop.
2. Disconnect the wire from the spark plug (Fig. 5).
3. Remove the cap screw, the wheel spacer, and the locknut mounting the wheel to the pivot arm (Fig. 40).

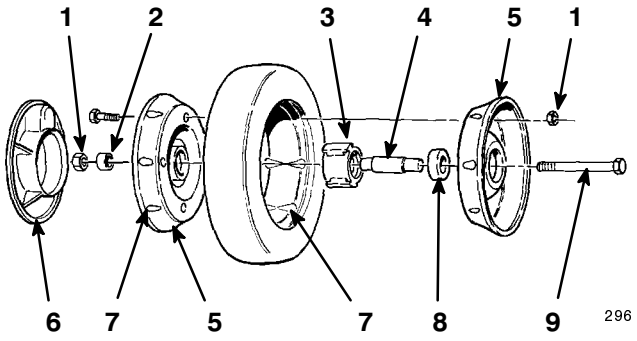

Figure 40

1. Locknuts
2. Wheel spacer
3. Bearing/hub assembly
4. Bearing spacer
5. Wheel half
6. Plastic cover (rear wheels only; Model 22040)
7. Lug
8. Bearing (2)
9. Cap screw

4. Separate the wheel halves from the tire by removing four cap screws and four locknuts (Fig. 40).

Note: If you remove the bearings from the bearing/hub assembly, remove them by pressing on the bearing spacer (Fig. 40).

Assembling the Wheels

1. Position the tire onto one wheel half, aligning the lugs on each (Fig. 40).
2. Place the bearing/hub assembly into the center hole of the wheel half. Ensure that the legs of the hub are positioned over the flange of the hole (Fig. 40).
3. Place the other wheel half onto the bearing/hub assembly, aligning the wheel and the tire lugs and the mounting holes (Fig. 40).
4. Using two 1/4–20 x 1.50 in. (6 x 38 mm) fully threaded screws or bolts and non-locking nuts, loosely secure the wheel halves together. Mount the screws or bolts in the opposing holes (Fig. 40).
5. Check the alignment of all parts and tighten the screws, alternating from side to side for a uniform fit, until the wheel halves are drawn together (Fig. 40).
6. Install the two cap screws and two locknuts previously removed in the remaining holes in the wheel halves and tighten. Remove the two long screws or bolts and replace them with two cap screws and two locknuts (Fig. 40).
7. Install the wheel to the pivot arm with the cap screws, a spacer, and a locknut. Ensure that the spacer is positioned between the wheel hub and the pivot arm (Fig. 40).

Emptying the Fuel Tank

1. Stop the engine and wait for it to cool down.
2. Disconnect the wire from the spark plug (Fig. 5).
3. Remove the cap from fuel tank (Fig. 3).
4. Use a hand pump to syphon the fuel into a clean, approved fuel container.
5. Connect the wire to the spark plug.
6. Run the engine until it stops.
7. Start the engine again to ensure that all the fuel is out of the carburetor.

Storage

To prepare the lawn mower for off-season storage, perform the recommended maintenance procedures. Refer to *Maintenance* on page 14.

Store the lawn mower in a cool, clean, dry place. Cover the lawn mower to keep it clean and protected.

Preparing the Fuel System

Warning

Gasoline can vaporize if you store it over long periods of time and explode if it comes into contact with an open flame.

- **Do not store gasoline over long periods of time.**
- **Do not store the lawn mower with gasoline in the fuel tank or the carburetor in an enclosure with an open flame. (For example, a furnace or a water heater pilot light.)**
- **Allow the engine to cool before storing it in any enclosure.**

Empty the fuel tank when mowing the last time before storing the lawn mower.

1. Run the lawn mower until the engine stops from running out of fuel.
2. Prime the engine and start it again.
3. Allow the engine to run until it stops. When you can no longer start the engine, it is sufficiently dry.

Preparing the Engine

1. Remove the spark plug (Fig. 5).
2. Using an oil can, add about one tablespoon of oil to the crankcase through the spark plug hole.
3. Slowly rotate the engine several times, using the starter rope, to distribute the oil.
4. Install the spark plug but **do not** connect the wire to the spark plug.

General Information

1. Clean the lawn mower housing. Refer to *Cleaning the Underside of the Lawn Mower Housing* on page 15.
2. Clean any dirt and chaff from the cylinder, cylinder head fins, and blower housing.
3. Remove grass clippings, dirt, and grime from the external parts of the engine, the shrouding, and the top of the lawn mower housing.
4. Check the condition of the blade. Refer to *Maintaining the Cutting Blade* on page 17.
5. Clean the BBC shield; refer to *Cleaning the Blade Brake Clutch Shield* on page 19.
6. Clean the air cleaner; refer to *Servicing the Air Cleaner* on page 16.
7. Lubricate the pivot arms; refer to *Lubricating the Pivot Arms* on page 17.
8. Tighten all nuts, bolts, and screws.
9. Touch up all rusted or chipped paint surfaces with paint available from an Authorized Service Dealer.

Accessories

You may purchase the following accessories from an Authorized Service Dealer:

- Side Discharge Kit
- Atomic blade
- Spark Arrestor Kit

Note: If a spark arrestor is required by local, state, or federal regulations, you may purchase one from an Authorized Service Dealer. Clean the screen after every 75 hours of operation. Operating the lawn mower on any California forest, brush, or grass-covered land without a properly operating spark arrestor violates state law, Section 4442 Public Resources Code.

Troubleshooting

Toro designed and built your lawn mower for trouble-free operation. Check the following components and items carefully, and refer to *Maintenance* on page 14 for more information. If a problem continues, contact an Authorized Service Dealer.

Problem	Possible Causes	Corrective Action
Engine does not start	1. The fuel tank is empty or the fuel system contains stale fuel.	1. Drain and/or fill the fuel tank with a fresh gasoline-and-oil mixture. If the problem persists, contact an Authorized Service Dealer.
	2. The throttle lever is not in the *Fast* position.	2. Move the throttle lever to the *Fast* position.
	3. The primer has not been pressed.	3. Press the primer three times.
	4. The wire is not connected to the spark plug.	4. Connect the wire to the spark plug.
	5. The spark plug is pitted, fouled, or the gap is incorrect.	5. Check the spark plug and adjust the gap if necessary. Replace the spark plug if it is pitted, fouled, or cracked.
Engine starts hard or loses power	1. The fuel tank contains stale fuel.	1. Drain and fill the fuel tank with a fresh gasoline-and-oil mixture.
	2. The air filter element is dirty and is restricting the air flow.	2. Replace the air filter element.
	3. The underside of the lawn mower deck contains clippings and debris.	3. Clean the underside of the lawn mower deck.
	4. The spark plug is pitted, fouled, or the gap is incorrect.	4. Check the spark plug and adjust the gap if necessary. Replace the spark plug if it is pitted, fouled, or cracked.
Engine runs rough	1. The wire is not connected to the spark plug.	1. Connect the wire to the spark plug.
	2. The spark plug is pitted, fouled, or the gap is incorrect.	2. Check the spark plug and adjust the gap if necessary. Replace the spark plug if it is pitted, fouled, or cracked.
	3. The throttle lever is not in the *Fast* position.	3. Move the throttle lever to the *Fast* position.
	4. The air filter element is dirty and is restricting the air flow.	4. Replace the air filter element.

Problem	Possible Causes	Corrective Action
Lawn mower or engine vibrates excessively	1. The blade is bent or is out of balance. 2. The blade mounting bolt is loose. 3. The underside of the lawn mower deck contains clippings and debris. 4. The engine mounting bolts are loose.	1. Balance the blade. If the blade is bent, replace it. 2. Tighten the blade mounting bolt. 3. Clean the underside of the lawn mower deck. 4. Tighten the engine mounting bolts.
Uneven cutting pattern	1. All four wheels are not at the same height. 2. The blade is dull. 3. You are mowing in the same pattern repeatedly. 4. The underside of the lawn mower deck contains clippings and debris.	1. Place all four wheels at the same height. 2. Sharpen and balance the blade. 3. Change the mowing pattern. 4. Clean the underside of the lawn mower deck.
Discharge chute plugs	1. The throttle lever is not in the *Fast* position. 2. The cutting height is too low. 3. You are mowing too fast. 4. The grass is wet. 5. The underside of the lawn mower deck contains clippings and debris.	1. Move throttle lever to the *Fast* position. 2. Raise the cutting height. 3. Slow down. 4. Allow the grass to dry before mowing. 5. Clean the underside of the lawn mower deck.
Lawn mower does not self-propel	1. The self-propel drive cable is out of adjustment or is damaged. 2. There is debris under the belt cover.	1. Adjust the self-propel drive cable. Replace the cable if necessary. 2. Clean the debris from under the belt cover.

Federal Emission Control Warranty Statement

A Two-Year Limited Warranty

Your Warranty Rights and Obligations

The U.S. Environmental Protection Agency (EPA), Toro, and Toro Warranty Company are pleased to explain the emission control system warranty on your 1997 and later utility/lawn/garden equipment engine. 1997 and later model year utility/lawn/garden equipment engines must be designed, built and equipped, at the time of sale, to meet the U.S. EPA regulations for small non-road engines. The equipment engine must be free from defects in materials and workmanship, which cause it to fail to conform with U.S. EPA standards, for the first two years of engine use from the date of sale to the ultimate purchaser. Toro and Toro Warranty Company warrant the emission control system on your utility/lawn/garden equipment engine for the period of time listed above, provided there has been no abuse, neglect, or improper maintenance of your utility/lawn/garden equipment engine.

Your emission control system may include parts such as the carburetor or fuel injection system, the ignition system, and catalytic converter. Also included may be hoses, belts, connectors, and other emission related assemblies.

Where a warrantable condition exists, Toro and Toro Warranty Company promise to repair your engine at no cost to you, including diagnosis, parts, and labor.

Manufacturer's Warranty Coverage

Toro and its affiliate, Toro Warranty Company, pursuant to an agreement between them, jointly warrant the 1997 and later utility/lawn/garden equipment engines for two years from the date of delivery. If any emission-related part on your engine is defective in materials or workmanship, we will repair or replace the part, free of charge.

Owner Responsibilities

As the engine owner, you are responsible for the performance of the required maintenance listed in your operator's manual. We recommend that you retain all receipts covering maintenance on your equipment, but we cannot deny warranty solely for the lack of receipts or for your failure to ensure the performance of all scheduled maintenance.

Any replacement part or service that is equivalent in performance and durability may be used in non-warranty maintenance or repairs, and shall not reduce our warranty obligation.

As the engine owner, you should be aware that we may deny you warranty coverage if your engine or a part has failed due to abuse, neglect, improper maintenance, or unapproved modifications or parts.

You are responsible for presenting your equipment engine to an Authorized Service Dealer as soon as a problem exists. The warranty repairs should be completed in a reasonable amount of time, not to exceed thirty (30) days.

If you have any questions regarding your warranty rights and responsibilities, or if you need a referral to a Toro Service Dealer, please feel free to contact us at:

Customer Service Department
Toro Warranty Company
8111 Lyndale Avenue South
Bloomington, MN 55420-1196
952-888-8801 or 800-421-9684

Warranted Parts

The warranty period begins on the date the engine or equipment is delivered to a retail purchaser. Toro and Toro Warranty Company jointly warrant to the initial owner and each subsequent purchaser that the engine is free from defects in materials and workmanship, which cause the engine to fail to conform with applicable regulations, for a period of two years.

Failures caused by abuse, neglect, or improper maintenance are not covered. The use of add-on or modified parts can be grounds for disallowing a warranty claim. We are not liable to cover failures of warranted parts caused by the use of add-on or modified parts. We are liable for damages to other engine components caused by the failure of a warranted part still under warranty. The owner is responsible for the performance of the required maintenance, as defined in the operator's manual.

Any warranted part which is not scheduled for replacement as required maintenance, or which is scheduled only for regular inspection to the effect of "repair or replace as necessary" shall be warranted for the warranty period. Any warranted part which is scheduled for replacement as required maintenance shall be warranted for the period of time up to the first scheduled replacement point for that part. Coverage under this warranty extends only to the parts listed below (the emissions system parts) to the extent that these parts were present on the engine when purchased.

- Fuel Metering System
  - Cold start enrichment system including the choke mechanism or priming system
  - Fuel pump
  - Air fuel ratio feedback system
  - Carburetor and internal parts
  - Fuel injection system
- Air Induction System
  - Air cleaner
  - Reed intake system
  - Intake manifold
  - Controlled hot air intake system
- Ignition System
  - Spark plug(s)
  - Ignition coils and electronics
  - Advance/retard mechanisms
- Catalytic Converter/Thermal Reactor System
  - Catalytic converter
  - Thermal reactor
  - Exhaust manifold
- Air Injection System
  - Air injection system or pulse valve
  - Valves affecting distribution of air
- Exhaust Gas Recirculation (EGR) System
  - EGR valve body and piping system connecting to the intake side of the engine
  - EGR control system
- Particulate Controls
  - Traps, filters, precipitators, and any other device used to capture particulate emissions
- Miscellaneous Items Used in the Above Systems
  - Vacuum, temperature, and time-sensitive valves and switches
  - Electronic controls
  - Hoses, connectors, and assemblies of same

How to Get Warranty Service

Should you feel your Toro Product requires warranty service, contact the dealer who sold you the product or any Authorized Service Dealer or Master Service Dealer. The Yellow Pages of your telephone directory is a good reference source. The dealer will either arrange service at his/her dealership or recommend another Authorized Service Dealer who may be more convenient. You may need proof of purchase (copy of registration card, sales receipt, etc.) for warranty validation. The owner shall not be charged for diagnostic labor which leads to the determination that a warranted part is defective, if the diagnostic work is performed at a warranty station.

General Conditions

Neither The Toro Company nor Toro Warranty Company is liable for indirect, incidental or consequential damages in connection with the use of the Toro Products covered by this warranty, except for damages to other engine components caused by the failure of a warranted part still under warranty. Some states do not allow exclusions of incidental or consequential damages, or limitations on how long an implied warranty lasts, so the above exclusions and limitations may not apply to you.

All implied warranties of merchantability (that the product is fit for ordinary use) and fitness for use (that the product is fit for a particular purpose) are limited to the duration of the express warranty.

This warranty gives you specific legal rights, and you may also have other rights which vary from state to state.

Part No. 374-0023 Rev. A

Gas, Cordless, Electric, and 21″ Commercial Duty Walk Mowers

The Toro Total Coverage Guarantee

A Full Warranty
(Limited Warranty for Commercial Use)

Conditions and Products Covered

The Toro Company and its affiliate, Toro Warranty Company, pursuant to an agreement between them, jointly promise to repair any Toro Product used for normal residential purposes* if defective in materials or workmanship or if it stops functioning due to the failure of a component. The following time periods apply from the date of purchase:

Products	Warranty Period
• Super Recycler® Walk Mowers	5 year full warranty
• VacuPower® Walk Mowers	5 year full warranty
• All Other Mowers	2 year full warranty
• All Batteries	1 year full warranty

This warranty includes the cost of parts and labor, but you must pay transportation costs.

This warranty applies to all gas, cordless, and electric consumer walk power mowers.

* Normal residential purposes means use of the product on the same lot as your home. Use at more than one location is considered commercial use, and the commercial use warranty would apply.

Limited Warranty for Commercial Use

Toro Walk Power Mowers used for commercial, institutional, or rental use are warranted against defects in materials or workmanship. Components failing due to normal wear are not covered by this warranty. The following time periods apply from the date of purchase:

Products	Warranty Period	
	Engine	Entire Unit
• 21″ Commercial Duty Walk Mowers	2 year limited	1 year limited
• All Other Mowers	45 day limited	45 day limited

Instructions for Obtaining Warranty Service

Should you feel your Toro Product contains a defect in materials or workmanship, contact the dealer who sold you the product or any Authorized Service Dealer or Master Service Dealer. The Yellow Pages of your telephone directory is a good reference source. The dealer will either arrange service at his/her dealership or recommend another Authorized Service Dealer who may be more convenient. You may need proof of purchase (copy of registration card, sales receipt, etc.) for warranty validation.

If for any reason you are dissatisfied with the Service Dealer's analysis of the defect in materials or workmanship or if you need a referral to a Toro Service Dealer, please feel free to contact us at:

Customer Service Department
Toro Warranty Company
8111 Lyndale Avenue South
Bloomington, MN 55420-1196
952-888-8801 or 800-421-9684

Owner Responsibilities

You must maintain your Toro Product by following the maintenance procedures described in the operator's manual. Such routine maintenance, whether performed by a dealer or by you, is at your expense.

Items and Conditions Not Covered

There is no other express warranty except for special emission system coverage on some products and the Toro Starting Guarantee on GTS Engine. This express warranty does not cover:

- Cost of regular maintenance service or parts, such as filters, fuel, lubricants, oil changes, spark plugs, blade sharpening, worn blade, cable/linkage adjustments, or brake and clutch adjustments.
- Any product or part which has been altered or misused or required replacement or repair due to accidents or lack of proper maintenance.
- Repairs necessary due to improper fuel, contaminants in the fuel system, or failure to properly prepare the fuel system prior to any period of non-use over three months.
- Repairs necessary due to improper battery care, electrical supply irregularities, or failure to properly prepare the mower prior to any period of non-use.
- Pickup and delivery charges.

All repairs covered by this warranty must be performed by an Authorized Toro Service Dealer using Toro approved replacement parts.

General Conditions

Repair by an Authorized Toro Service Dealer is your sole remedy under this warranty.

Neither The Toro Company nor Toro Warranty Company is liable for indirect, incidental or consequential damages in connection with the use of the Toro Products covered by this warranty, including any cost or expense of providing substitute equipment or service during reasonable periods of malfunction or non-use pending completion of repairs under this warranty. Some states do not allow exclusions of incidental or consequential damages, or limitations on how long an implied warranty lasts, so the above exclusions and limitations may not apply to you.

This warranty gives you specific legal rights, and you may also have other rights which vary from state to state.

Countries Other than the United States or Canada

Customers who have purchased Toro products exported from the United States or Canada should contact their Toro Distributor (Dealer) to obtain guarantee policies for your country, province, or state. If for any reason you are dissatisfied with your Distributor's service or have difficulty obtaining guarantee information, contact the Toro importer. If all other remedies fail, you may contact us at Toro Warranty Company.

Part No. 374-0000 Rev. -