Form No. 3410-705 Rev C

TORO®

Count on it.

Parts Catalog

Z Master® 8000 Series Riding Mower

with 122cm Cutting Unit

Model No. 74311TE—Serial No. 400000000 and Up

Register at www.Toro.com.
Original Instructions (EN)

CE

3410-705 C

Ordering Replacement Parts

To order replacement parts, please supply the part number, the quantity, and the description of each part desired.

Understanding Reference Numbers

Each identified part in an illustration has a reference number. The reference number for a part also appears in the parts list, along with other information about the part.

This catalog uses two special reference number formats, one to indicate parts in a service assembly and another to indicate the quantity of a given part in an illustration.

Service Assembly Reference Numbers

Parts in service assemblies have reference numbers in the form a:b. The a represents the reference number of the entire service assembly and the b represents a sequential number unique to each part within the service assembly.

For example, a wheel assembly might be identified by reference number 6, the tire by 6:1, the valve by 6:2, and the wheel by 6:3. When you order the assembly identified by reference number 6, you receive all parts identified by reference numbers 6:1,6:2, and 6:3. However, you may also order any part individually. Reference numbers of this type appear in illustration and in parts lists.

Reference Numbers Indicating Quantity

In an illustration, if a reference number indicates more than one part, the reference number has the form nX y. The n represents the quantity of the part, the X is the multiplication symbol, and the y represents the reference number.

For example, in an illustration, the reference number 2X 37 means that two of the parts identified by reference number 37 are indicated.

Contents

Caster Wheel and Frame Assembly 4
Frame and Decal Assembly No. 116-7482. 6
Pump and Muffler Guard Assembly. 8
Roll-Over Protection System Assembly No. 78559 10
Speed and Steering Control Assembly 12
Parking Brake Assembly 14
Seat and Console Assembly. 16
Hydraulic Assembly 18
Hydraulic Pump Assembly No. 116-7836. 20
Idler Assembly No. 103-7349. 22
PTO Guard Assembly 24
Blower Mounting Assembly 26
Blower Assembly No. 116-9649. 28
Engine, Muffler and Air Cleaner Assembly 30
Fuel Assembly 32
Electrical System Assembly 34
Hopper Switch Actuator Assembly No. 103-8528 36
Hopper Mounting Assembly 38
Hopper Assembly No. 130-2872 40
Hopper Screen Assembly No. 109-0717 42
Hopper Door Assembly No. 130-2875 44
Hopper Frame Assembly No. 109-4086 46
Drive Assembly. 48
Deck Mounting Assembly 50
Deck Assembly. 52
Deck Decal Assembly No. 109-4372 54
Discharge Tube Assembly No. 103-9487. 56
Gearbox Assembly No. 103-3387 58
Rear Deck Height Adjustment Assembly No. 109-0323. 60
Drive Shaft Assembly No. 103-9485. 62
Deck Support Frame Assembly No. 130-2893 64
Deck Support W/Decals Assembly No. 103-9480. 66
Spring Lift Assist Assembly No. 116-7851 68
Attachments and Accessories 70

© 2020—The Toro® Company
8111 Lyndale Avenue South
Bloomington, MN 55420

Contact us at www.Toro.com.
Printed in the USA.
All Rights Reserved

Caster Wheel and Frame Assembly

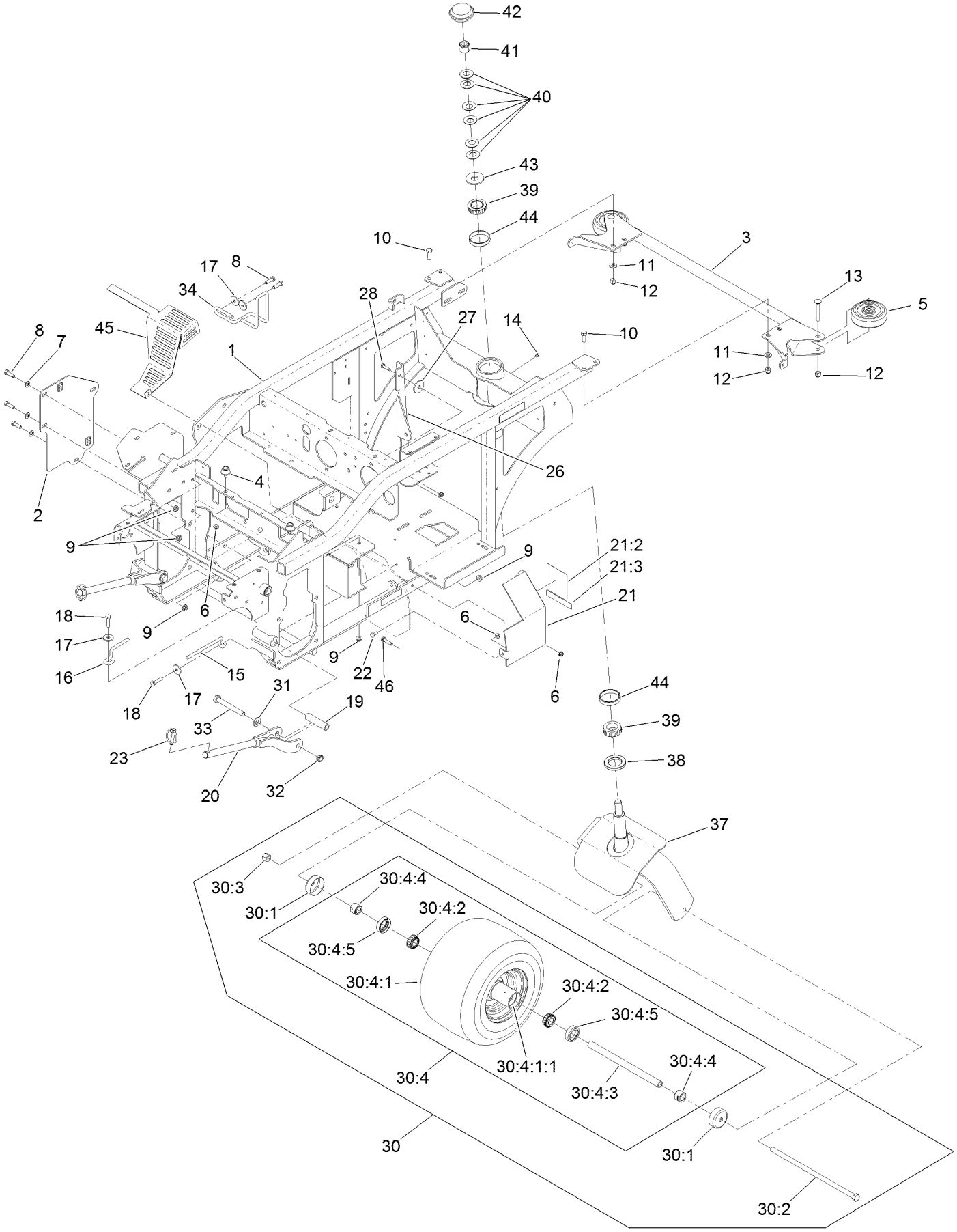

Caster Wheel and Frame Assembly (continued)

Ref.	Part Number	Qty.	Description
1	116-7482	1	Frame ASM
2	116-7396-03	1	Plate-Support
3	109-0925-03	1	Bumper-Rear
4	109-2365	1	Bumper-Rubber
5	103-5408	2	Roller-Bumper
6	32128-33	5	Nut-HF
7	3256-23	3	Washer-Plain
8	322-5	5	Screw-HH
9	32128-20	5	Nut-HF
10	323-6	4	Screw-HH
11	3256-24	4	Washer-Flat
12	3296-39	6	Nut-Lock, NI
13	3231-31	2	Screw-CARR
14	1-811010	1	Plug
15	103-8333	1	Guide-Belt
16	103-8349	1	Guide-Belt
17	1-613235	4	Washer
18	322-6	2	Screw-HH
19	1-633060	2	Spacer-Wheel, Short
20	103-6596-03	2	Rod-Push
21	133-1821	1	Shield ASM-Drive
21:2	116-8941	1	Decal-Belt Routing
21:3	98-1977	1	Decal-Warning
22	321-3	1	Screw-HH
23	103-4155	2	Pin-Lynch
26	109-5874-03	1	Brace-PTO
27	1-213069	1	Washer
28	321-6	1	Screw-HH
30	130-2865	1	Wheel And Axle ASM
30:1	103-2768	2	Guard-Seal
30:2	103-7738	1	Screw-HH
30:3	3296-23	1	Nut-Lock, NI
30:4	130-2864	1	Wheel And Bearing ASM
30:4:1		1	Wheel And Tire ASM ●
30:4:1:1	1-633584	2	Bearing-Cup
30:4:2	1-633585	2	Bearing-Cone, Taper
30:4:3	126-5362	1	Axle Caster ASM
30:4:4	103-3051	1	Spacer-Nut ■
30:4:5	103-0063	2	Seal-Caster
31	3256-26	2	Washer-Flat
32	3296-45	2	Nut-Hex
33	325-17	2	Screw-HH
34	116-8323	1	Guide-Belt
37	103-3351-03	1	Fork-Rear Caster
38	103-9027	1	Seal-Grease
39	103-9028	2	Bearing-Roller, Cone Taper
40	1-633508	6	Washer-Bellville
41	3296-51	1	Nut-Lock, NI
42	126-9882	1	Cap-Grease
43	3256-8	1	Washer-Flat
44	103-9029	2	Cup-Tapered, Roller Bearing
45	116-7272-03	1	Shield-Heat
46	120-4654	1	Screw-HHF

● Not serviced separately
■ Use Pro-Lock, Nut Type (P/N 1-840022, .5ml tube) on threads.

Frame and Decal Assembly No. 116-7482

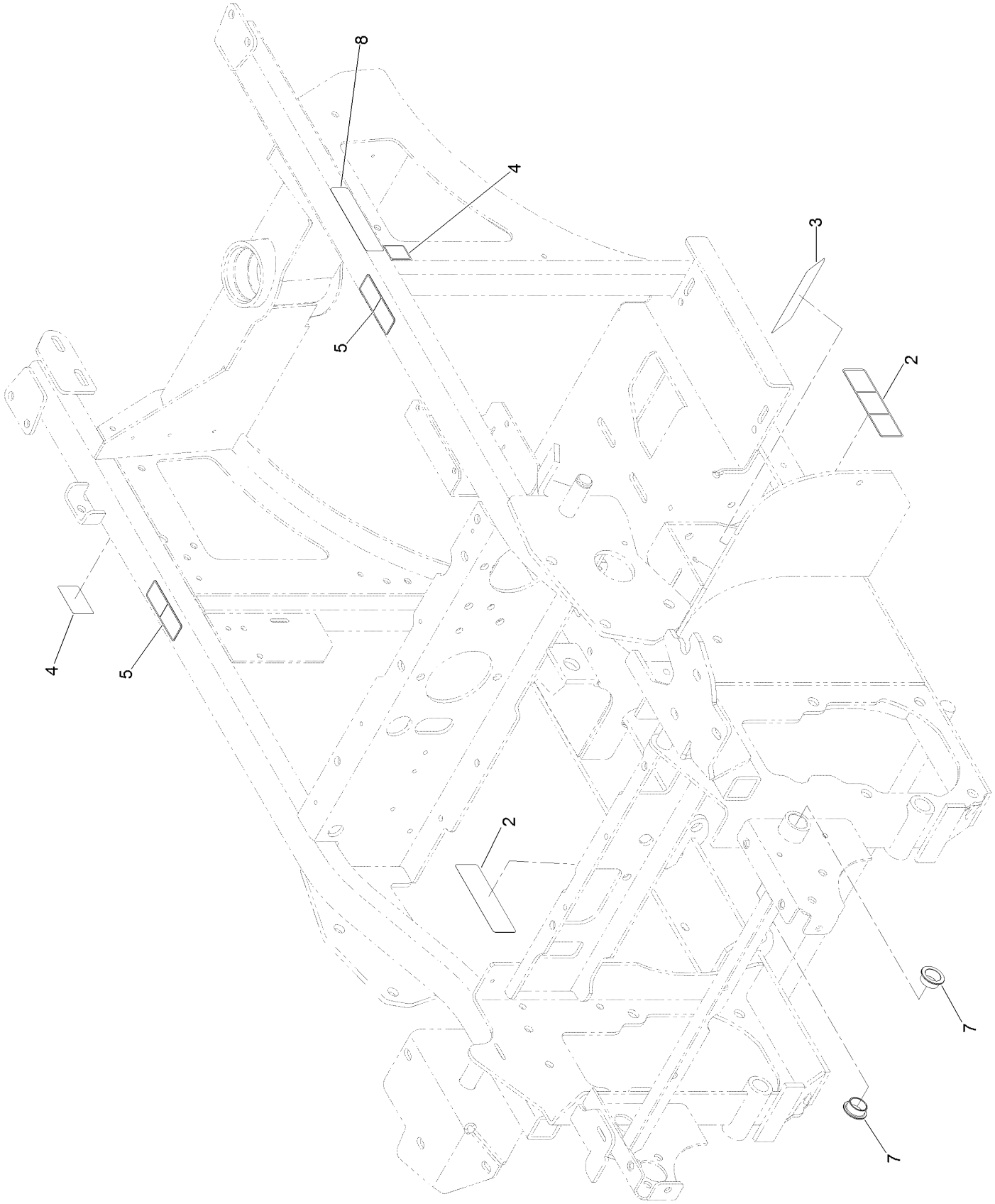

Frame and Decal Assembly No. 116-7482 (continued)

Ref.	Part Number	Qty.	Description
2	112-9028	2	Decal-Cover, Missing
3	126-4207	1	Decal-Adjustment, Clutch
4	106-5517	2	Decal-Warning
5	120-0625	2	Decal-Warning
7	108519	2	Bushing-Bronze
8	117-2718	1	Decal-Arrester, Spark

Pump and Muffler Guard Assembly

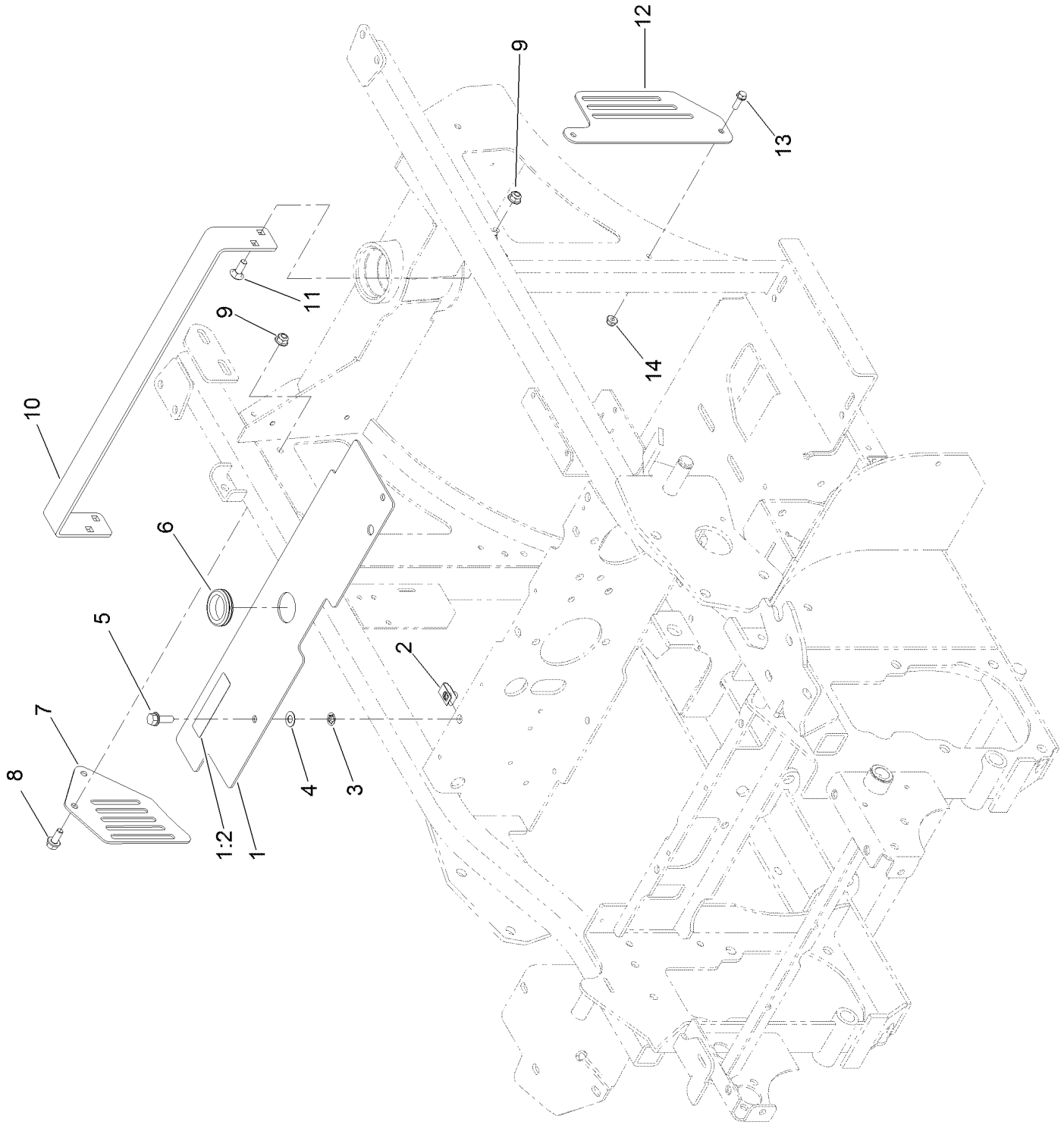

Pump and Muffler Guard Assembly (continued)

Ref.	Part Number	Qty.	Description
1	133-1826	1	Pump Guard ASM
1:2	98-1977	1	Decal-Warning
2	115-7721	2	Nut-Clip, U
3	117-2749	2	Nut-Push
4	73-0041	2	Washer-Thrust
5	3234-29	2	Screw-HHF
6	240-3	1	Grommet-Rubber
7	133-1824-03	1	Guard-Muffler, RH
8	3234-47	2	Screw-HHF
9	104-8300	6	Nut-HF, NI
10	133-1823-03	1	Guard-Muffler, Top
11	3230-16	4	Screw-CARR
12	133-1822-03	1	Guard-Muffler, LH
13	32105-15	2	Screw-HWH
14	104-7201	2	Nut-HF

Roll-Over Protection System Assembly No. 78559

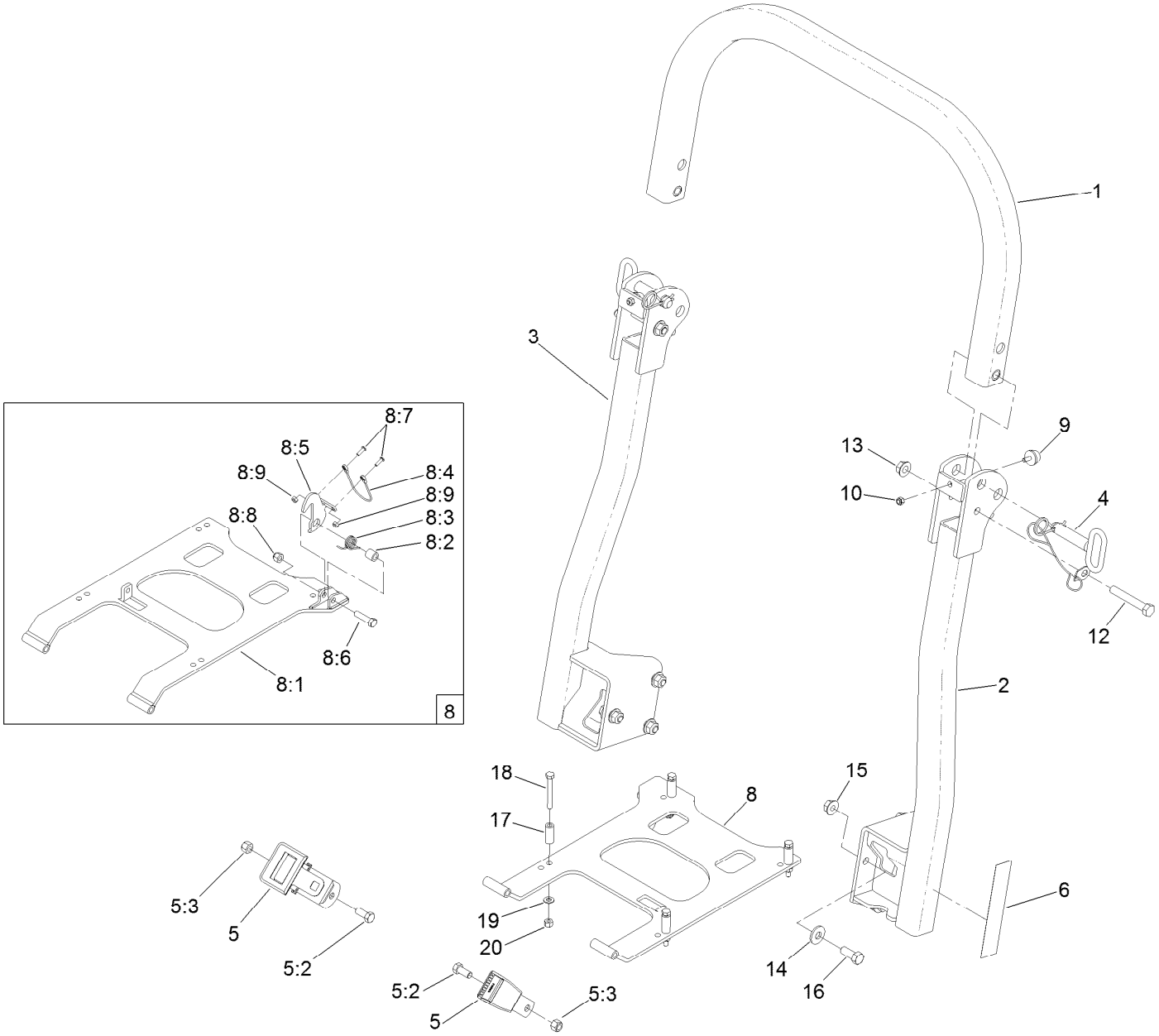

Roll-Over Protection System Assembly No. 78559 (continued)

Ref.	Part Number	Qty.	Description
1		1	Tube-Upper ROPS ●
2		1	Tube-Support ●
3		1	Tube-Support ●
4	103-4553	2	Pin-Fold, ROPS
5	103-4469	1	Seatbelt Kit
5:2	3212-4	2	Screw-HH
5:3	3296-7	2	Nut-Lock
6	107-3069	1	Decal-Warning
8	126-0070	1	Seat Frame ASM
8:1	126-0018-03	1	Mount-Seat, ROPS
8:2	75-5270	1	Spacer-Knob, Seat
8:3	110-5831	1	Spring-Torsion
8:4	126-0522	1	Cable Grip ASM
8:5	126-0358	1	Hook
8:6	323-8	1	Screw-HH
8:7	3274-39	2	Screw-HSBH
8:8	3296-39	1	Nut-Lock, NI
8:9	3296-2	2	Nut-Lock, NI
9	109-2365	2	Bumper-Rubber
10	3296-73	2	Nut-Lock, NI
12	325-13	2	Screw-HH
13	32128-23	2	Nut-HF
14	1-513435	6	Washer-Spring
15	32128-49	6	Nut-HHF
16	325-5	6	Screw-HH
17	103-0384	4	Spacer
18	322-12	4	Screw-HH
19	3256-23	4	Washer-Plain
20	3296-29	4	Nut-Lock, NI

● Not serviced separately

Speed and Steering Control Assembly

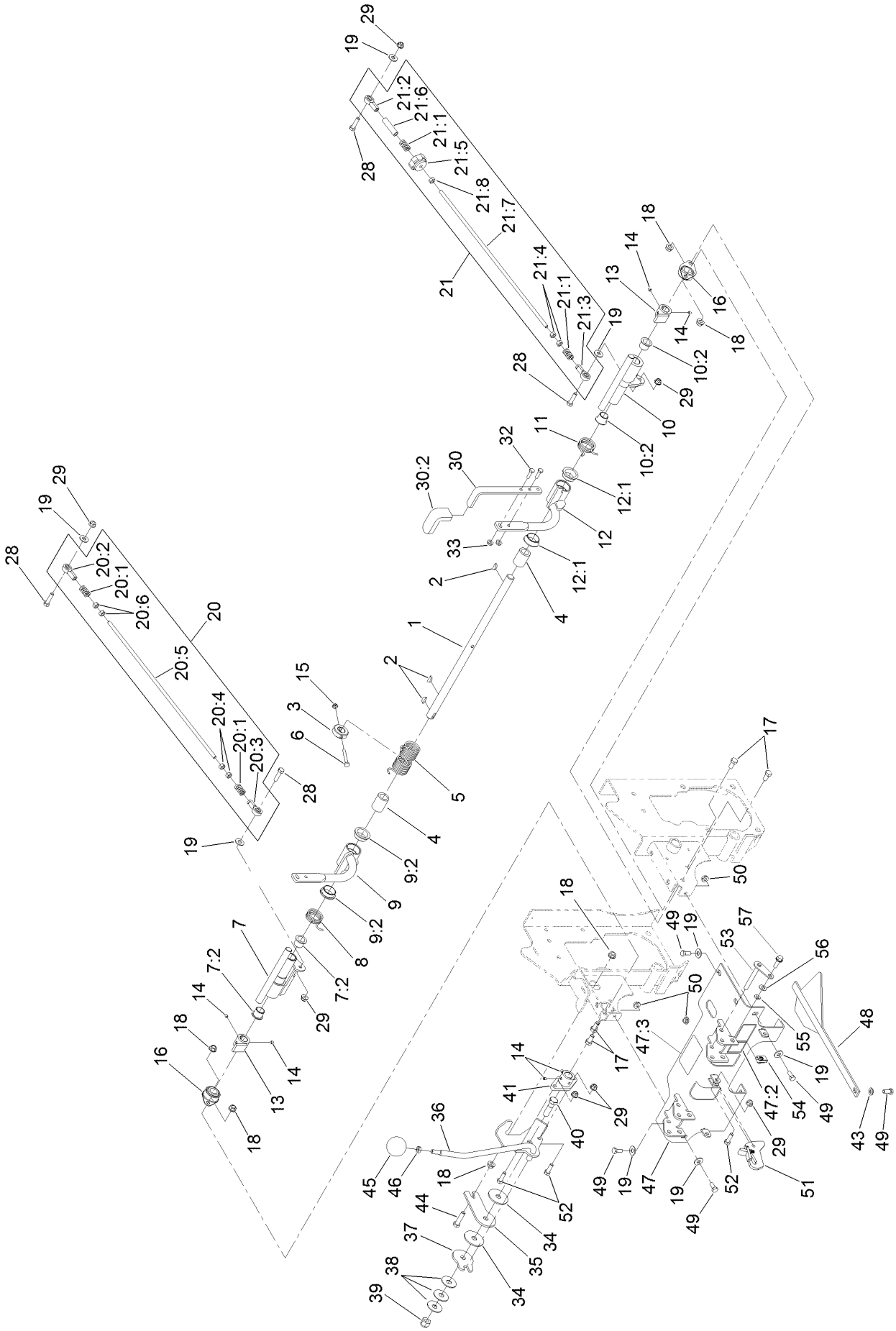

Speed and Steering Control Assembly (continued)

Ref.	Part Number	Qty.	Description
1	116-7856	1	Shaft-Control, Speed
2	3257-5	3	Key-Woodruff
3	116-7372	1	Stop-Hub, Center
4	116-7414	2	Bushing-Plastic
5	116-8475	1	Spring-Torsion, Double
6	321-11	1	Screw-HH
7	116-8444	1	RH Control Hub ASM
7:2	103-4398	2	Bearing-Flange, Iglide
8	116-7380	1	Spring-Torsion, RH
9	126-7461	1	RH Steering Handle ASM
9:2	116-7422	2	Bearing-Flange, Iglide
10	116-7416	1	LH Control Hub ASM
10:2	103-4398	2	Bearing-Flange, Iglide
11	116-7381	1	Spring-Torsion, LH
12	126-7463	1	LH Steering Handle ASM
12:1	116-7422	2	Bearing-Flange, Iglide
13	103-4342	2	Hub-Speed Control
14	108-0989	6	Screw-Set
15	3296-56	1	Nut-Lock, NI
16	1-633102	2	Bearing-Flange, Side
17	323-4	4	Screw-HH
18	3290-357	6	Nut-HHF, Whiz
19	3256-3	9	Washer-Flat
20	116-9667	1	RH Pump Linkage ASM
20:1	1-323245	2	Spring-Compression
20:2	1-543017	1	Balljoint-RH
20:3	1-633152	1	Balljoint-LH
20:4	1-804524	2	Nut
20:5	116-7492	1	Rod-Linkage, Steering
20:6	3219-2	2	Nut-Hex
21	116-9668	1	LH Pump Linkage ASM
21:1	1-323245	2	Spring-Compression
21:2	1-543017	1	Balljoint-RH
21:3	1-633152	1	Balljoint-LH
21:4	1-804524	2	Nut
21:5	103-3060	1	Knob-Tracking
21:6	103-5945	1	Spacer
21:7	116-7492	1	Rod-Linkage, Steering
21:8	3219-2	1	Nut-Hex
28	322-6	4	Screw-HH
29	104-8300	7	Nut-HF, NI
30	116-9246	2	Handle ASM
30:2	103-5994	1	Grip-Handle, Steering
32	321-5	4	Screw-HH
33	32128-33	4	Nut-HF
34	103-5009	2	Disc-Friction
35	116-7846	1	Plate-Friction, Speed Control
36	116-7845	1	Lever-Speed Control
37	116-7849	1	Plate-Friction, Speed Control
38	103-5018	3	Washer-Disc, Spring
39	3296-19	1	Nut-Hex
40	116-7848	1	Screw-HH
41	116-7859	1	Hub-Control, Speed
43	3256-23	1	Washer-Plain
44	323-8	1	Screw-HH
45	103-4397	1	Knob-Ball, Speed Control
46	3218-3	1	Nut-Jam
47	133-1832	1	Console ASM
47:2	116-9049	1	Decal-Danger, Driveline
47:3	116-8946	1	Decal-Motor, Wheel
48	103-5993-03	1	Guide-Plenum
49	322-3	6	Screw-HH
50	32128-20	3	Nut-HF
51	103-8494	1	Hook
52	322-5	3	Screw-HH
53	133-1831	1	Pin-Flag
54	115-7721	1	Nut-Clip, U
55	117-2749	1	Nut-Push
56	73-0041	1	Washer-Thrust
57	3234-29	1	Screw-HHF

Parking Brake Assembly

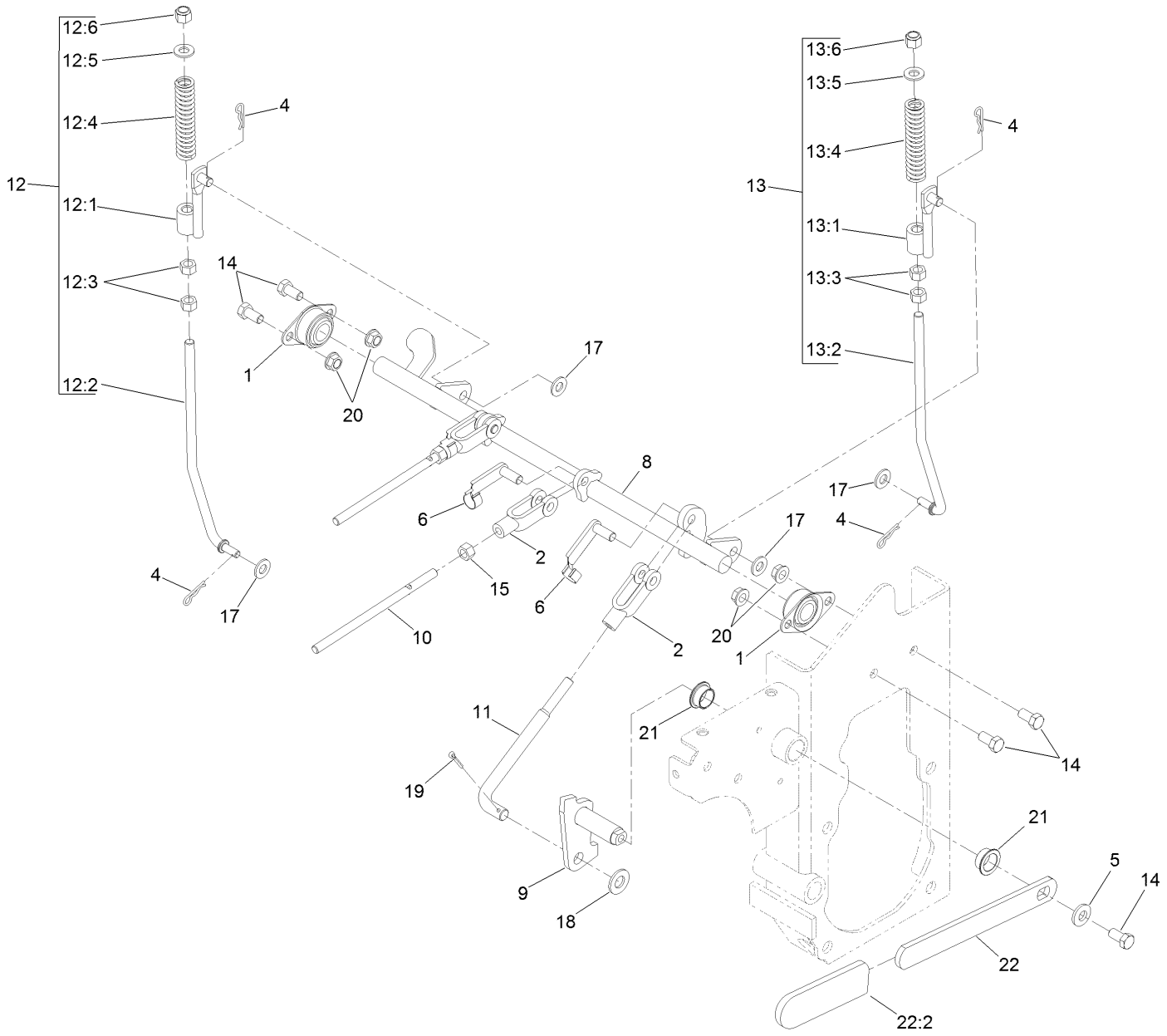

Parking Brake Assembly (continued)

Ref.	Part Number	Qty.	Description
1	1-633102	2	Bearing-Flange, Side
2	1-633131	3	Yoke-Linkage, Brake
4	1-806003	4	Pin-Cotter
5	98-5975	1	Washer-Belleville
6	103-2399	3	Pin-Spring, Clevis
8	116-7483-03	1	Shaft-Brake
9	116-7486	1	Pivot-Brake
10	116-7838	2	Rod-Linkage, Brake
11	116-8474	1	Rod-Linkage, Brake
12	116-9748	1	RH Brake Linkage ASM
12:1	116-8467	1	Brake Linkage ASM
12:2	116-8465	1	Link-Brake, RH
12:3	3219-3	2	Nut-Hex
12:4	116-8470	1	Spring-Compression
12:5	3256-24	1	Washer-Flat
12:6	3296-6	1	Nut-Lock

Ref.	Part Number	Qty.	Description
13	116-9749	1	LH Brake Linkage ASM
13:1	116-8467	1	Brake Linkage ASM
13:2	116-8464	1	Link-Brake, LH
13:3	3219-3	2	Nut-Hex
13:4	116-8470	1	Spring-Compression
13:5	3256-24	1	Washer-Flat
13:6	3296-6	1	Nut-Lock
14	323-4	5	Screw-HH
15	3219-3	2	Nut-Hex
17	3256-24	4	Washer-Flat
18	3256-26	1	Washer-Flat
19	3272-10	1	Pin-Cotter
20	3290-357	4	Nut-HHF, Whiz
21	108519	2	Bushing-Bronze
22	103-9469	1	Park Brake Handle ASM
22:2	1-633268	1	Grip-Lever

Seat and Console Assembly

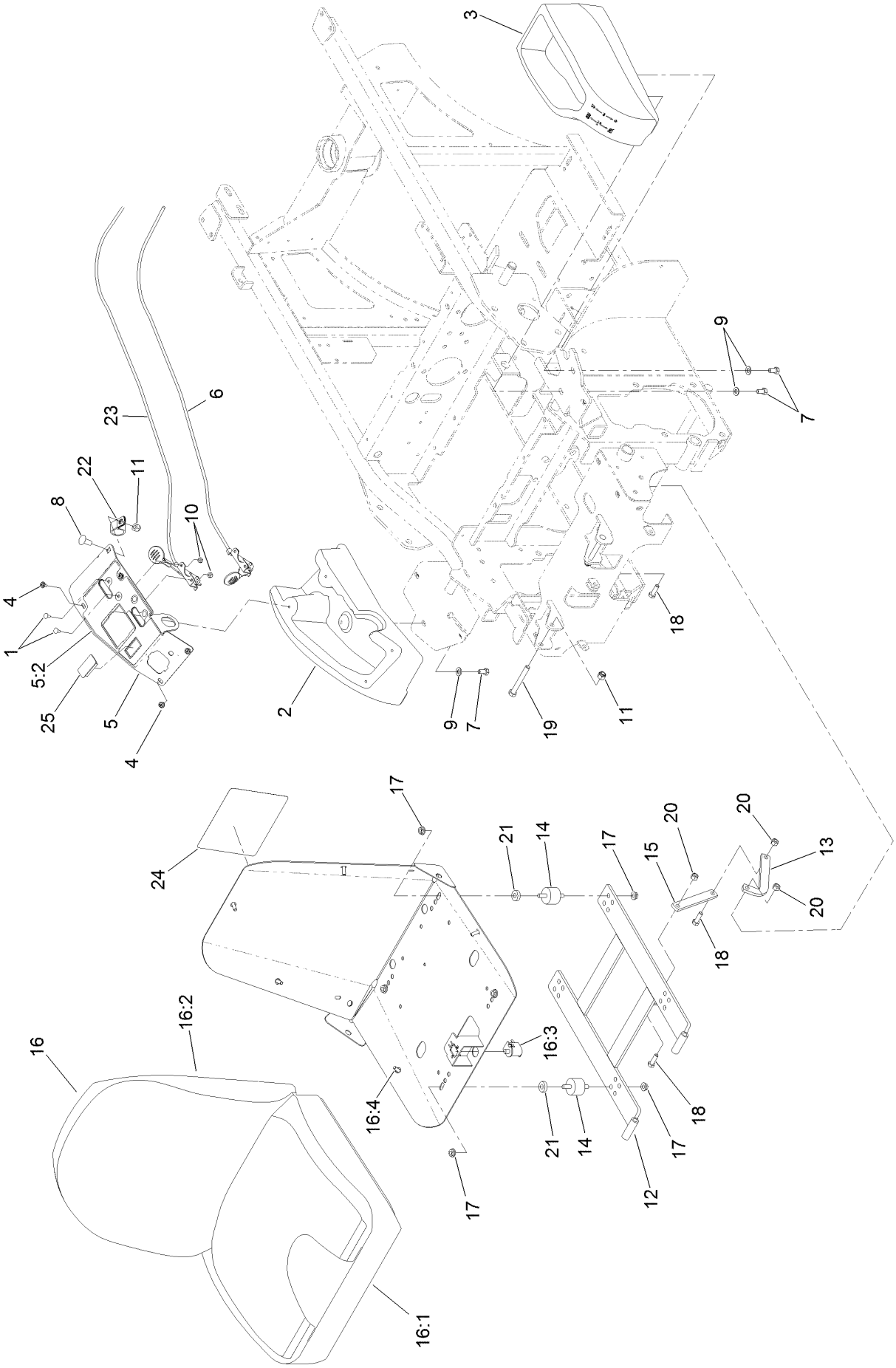

Seat and Console Assembly (continued)

Ref.	Part Number	Qty.	Description
1	1-807513	4	Bolt-CARR
2	130-2857	1	Console-RH
3	126-4343	1	Console-LH
4	109-2661	4	Screw-PPH
5	130-2896	1	Control Panel ASM
5:2	130-2880	1	Decal-Control
6	109-4641	1	Cable-Throttle
7	322-2	6	Screw-HH
8	3231-27	1	Screw-CARR
9	3256-23	6	Washer-Plain
10	3296-2	4	Nut-Lock, NI
11	3296-39	3	Nut-Lock, NI
12	103-4362-03	1	Frame-Seat
13	116-9554	1	Link-Seat Stop
14	103-5496	4	Mount-Vibration, Rubber

Ref.	Part Number	Qty.	Description
15	103-8563	1	Link-Seat
16	130-2852	1	Seat ASM
16:1	121-4751	1	Cushion-Seat, Bottom
16:2	121-4752	1	Cushion-Seat, Back
16:3	82-2190	1	Switch-Bail
16:4	103-8383	5	Bolt-Seat
17	32128-20	8	Nut-HF
18	322-5	3	Screw-HH
19	323-14	2	Screw-HH
20	3296-29	3	Nut-Lock, NI
21	5-0652	4	Spacer
22	1-643312	1	Clip-Loom
23	109-4640	1	Cable-Choke
24	116-9044	1	Decal-Service Aid
25	99-7420	1	Plug-Hole

Hydraulic Assembly

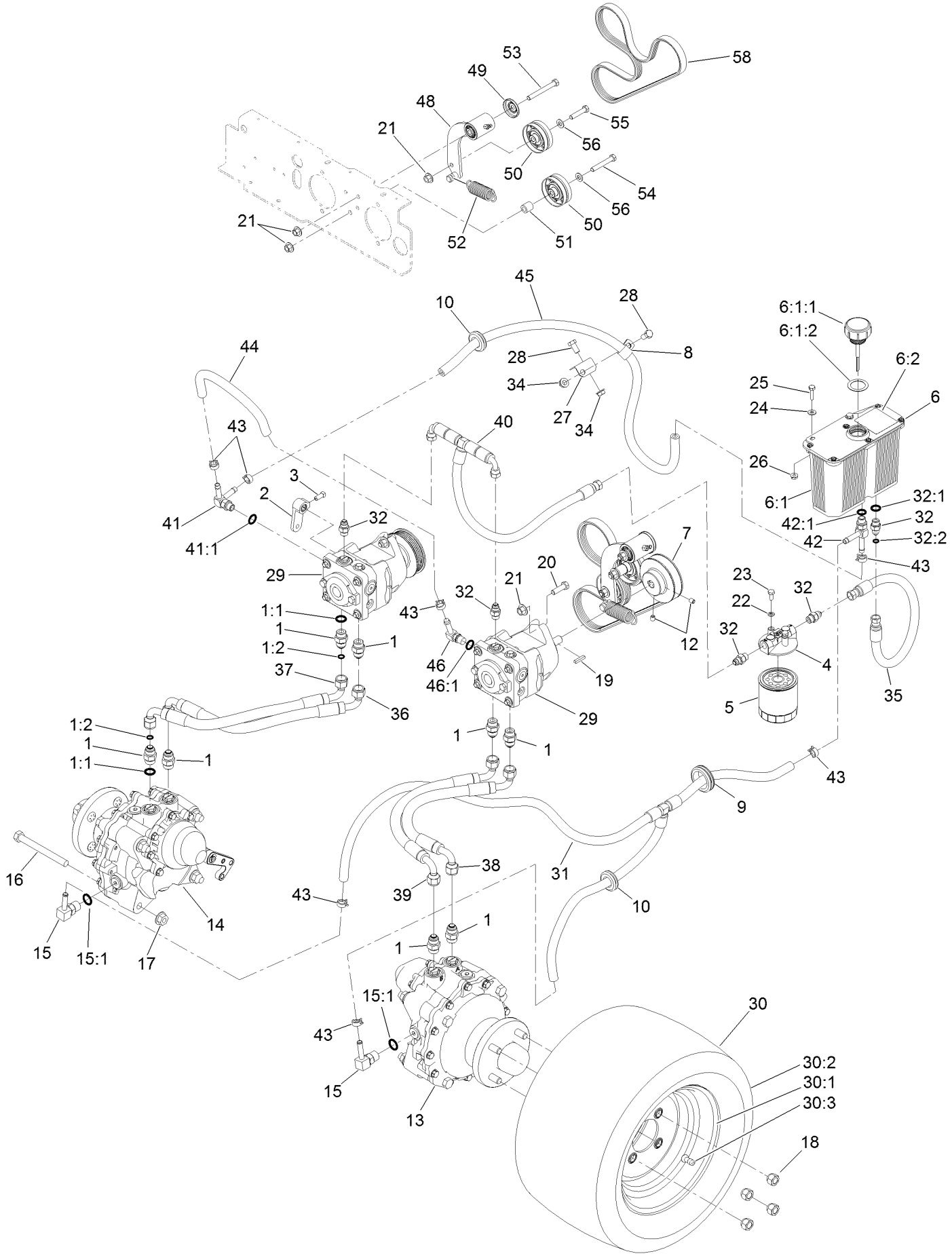

Hydraulic Assembly (continued)

Ref.	Part Number	Qty.	Description
1	1-603990	8	Fitting-Straight
1:1	1-603920	1	O-Ring
1:2	1-603992	1	O-Ring
2	1-632208	2	Arm-Control, Pump
3	120-6474	2	Screw-Set, SQH
4	104-7836	1	Head-Filter
5	114-3494	1	Element-Filter, 25 Micron
6	116-9274	1	Reservoir ASM
6:1		1	Reservoir-HYD ●
6:1:1	116-9273	1	Reservoir Cap ASM
6:1:2	103-1949	1	Gasket-Cap
6:2	115-4212	1	Decal-Warning
7	103-4246	2	Sheave
8	1-633396	1	Clip-Loom
9	103-7706	1	Grommet
10	1-543286	2	Grommet
12	1-803310	4	Screw-Set
13	116-7401	1	Motor-HYD, LH
14	116-7402	1	Motor-HYD, RH
15	354-134	2	Fitting-90
15:1	237-79	1	O-Ring
16	325-19	8	Screw-HH
17	32128-49	8	Nut-HHF
18	242-50	8	Nut-Lug
19	1-807272	2	Key
20	323-7	4	Screw-HH
21	32128-43	7	Nut-Flange
22	1-805004	2	Washer-Lock
23	321-3	2	Screw-HH
24	3256-22	2	Washer-Flat
25	321-6	2	Screw-HH
26	32128-33	2	Nut-HF
27	103-8631	1	Bracket-Clamp
28	323-4	2	Screw-HH
29	116-7836	2	12Cc Hydro Pump ASM
30	130-2869	2	Wheel And Tire ASM
30:1	130-2868	1	Wheel
30:2	105-1945	1	Tire
30:3	232-27	1	Stem-Valve
31	116-7831	1	Hydraulic Hose ASM
32	103-2156	5	Fitting-Straight
32:1	1-603921	1	O-Ring
32:2	103-1020	1	O-Ring
34	3290-357	2	Nut-HHF, Whiz
35	126-4400	1	Hydraulic Hose ASM
36	116-7827	1	Hydraulic Hose ASM
37	116-7828	1	Hydraulic Hose ASM
38	116-7829	1	Hydraulic Hose ASM
39	116-7830	1	Hydraulic Hose ASM
40	109-1264	1	Hydraulic Hose ASM
41	103-5469	1	Adapter-Tee
41:1	237-42	1	O-Ring
42	103-1828	1	Adapter-Run, Tee
42:1	237-42	1	O-Ring
43	103-1988	7	Clamp-Hose
44	103-5452	1	Hose-HYD
45	103-5477	1	Hose-HYD
46	100-4887	1	Fitting-Elbow, 90
46:1	237-42	1	O-Ring
48	103-7349	1	Short Idler ASM
49	103-2916	1	Guard-Top
50	116-6361	2	Pulley
51	106-5574	1	Spacer-Mounting, Steering
52	1-653331	1	Spring-Idler
53	323-20	1	Screw-HH
54	323-12	1	Screw-HH
55	323-9	1	Screw-HH
56	3256-24	2	Washer-Flat
58	130-2871	1	Belt-V

● Not serviced separately

Hydraulic Pump Assembly No. 116-7836

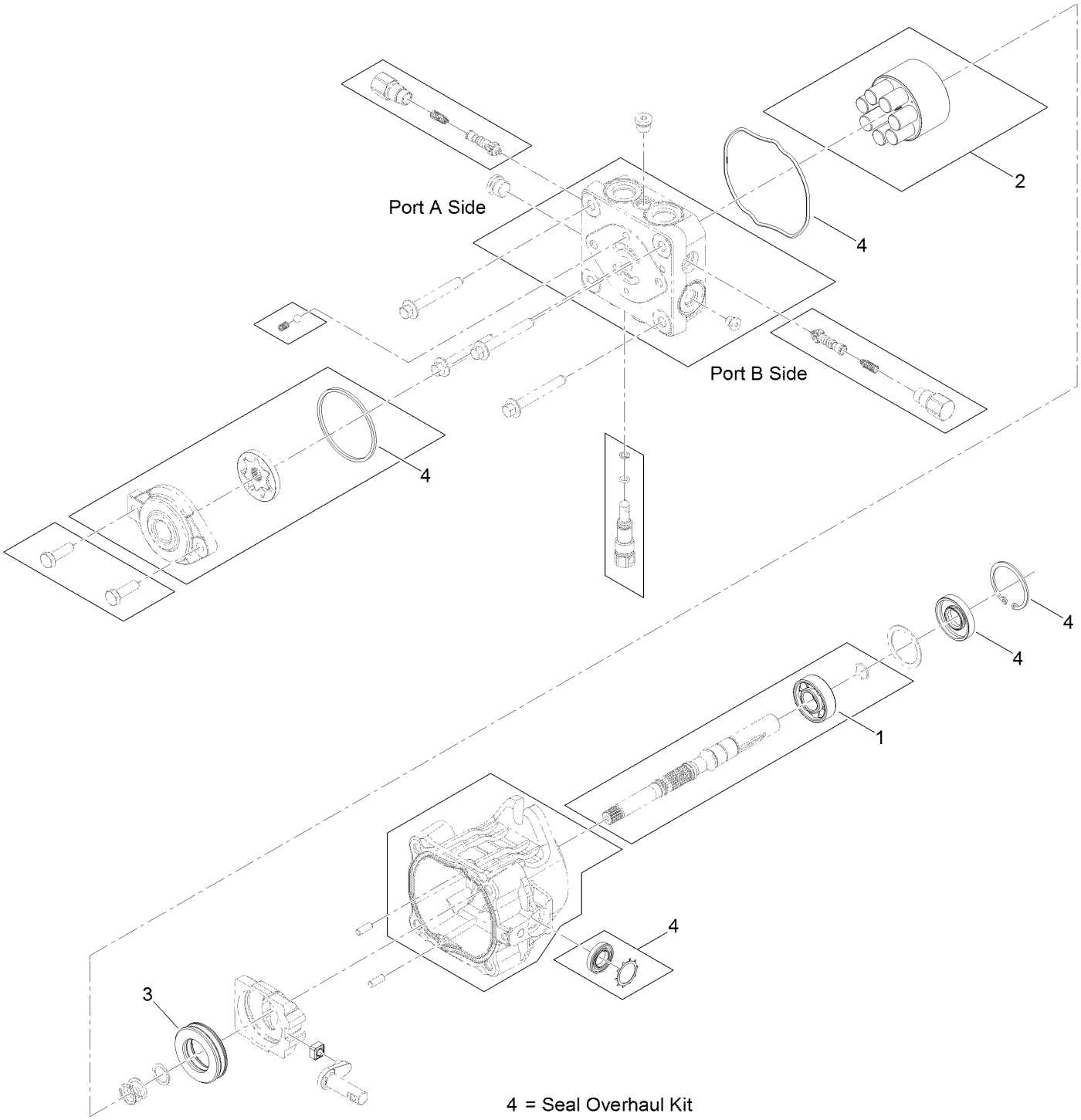

Hydraulic Pump Assembly No. 116-7836 (continued)

Ref.	Part Number	Qty.	Description
1	104-5311	1	Bearing-Ball
2	103-7443	1	Cylinder Block Kit
3	121-3235	1	Bearing-Thrust, Plastic Cage
4	105-6184	1	Seal Overhaul Kit

Idler Assembly No. 103-7349

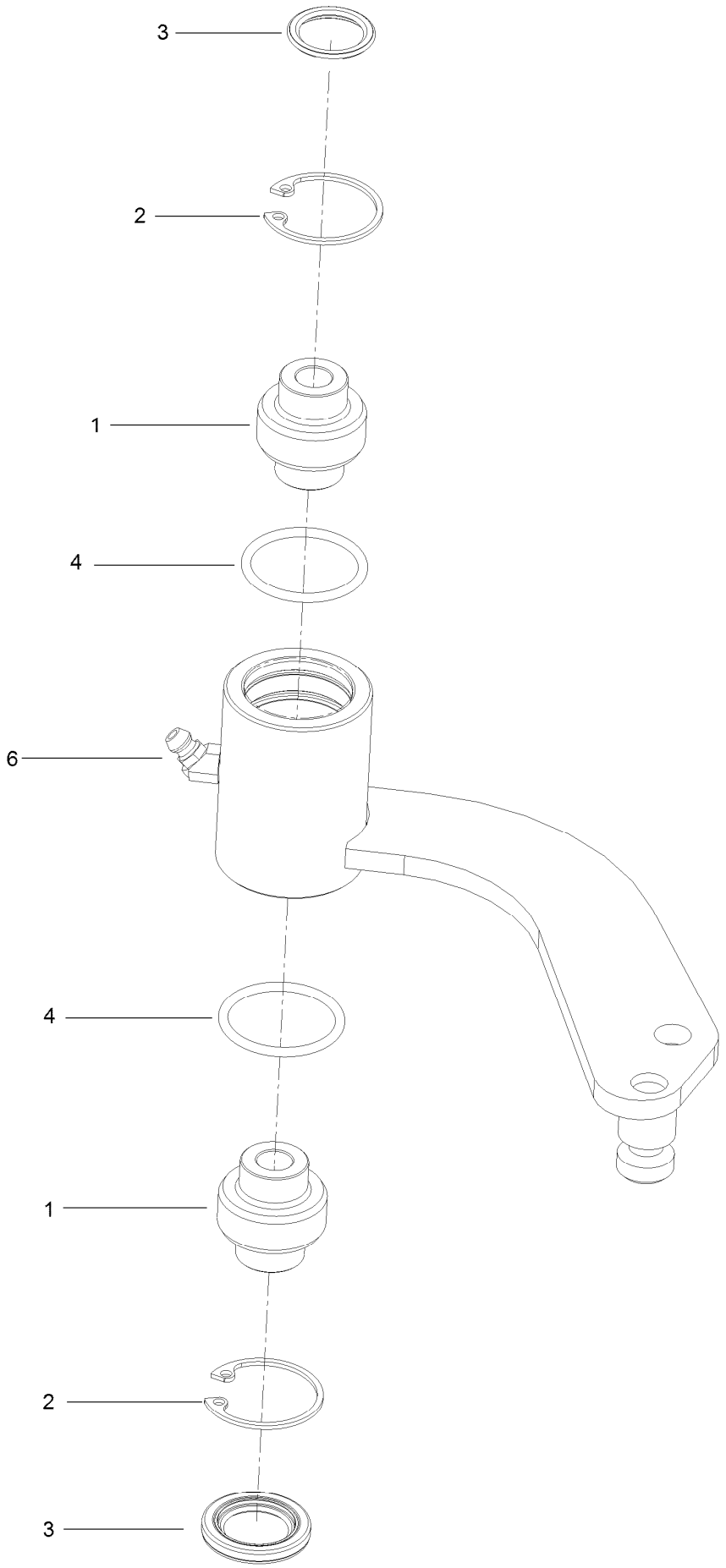

Idler Assembly No. 103-7349 (continued)

Ref.	Part Number	Qty.	Description
1	103-3504	2	Bearing-Spherical
2	32120-10	2	Ring-Snap
3	103-3506	2	Seal-Lip, Single
4	106-7159	2	O-Ring
6	302-11	1	Fitting-Lube, 45 DEG

PTO Guard Assembly

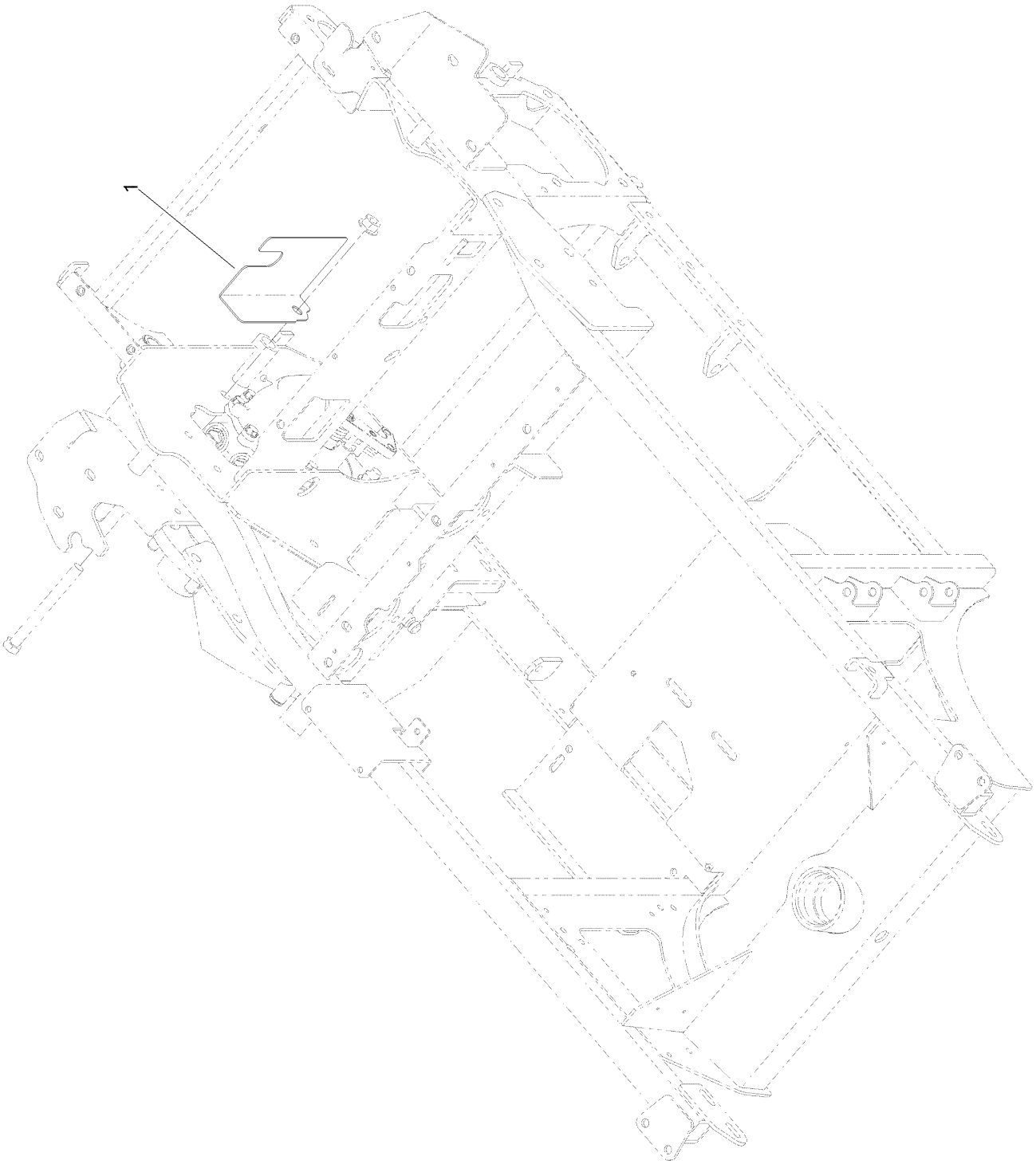

PTO Guard Assembly (continued)

Ref.	Part Number	Qty.	Description
1	136-1662-03	1	Guard-PTO

Blower Mounting Assembly

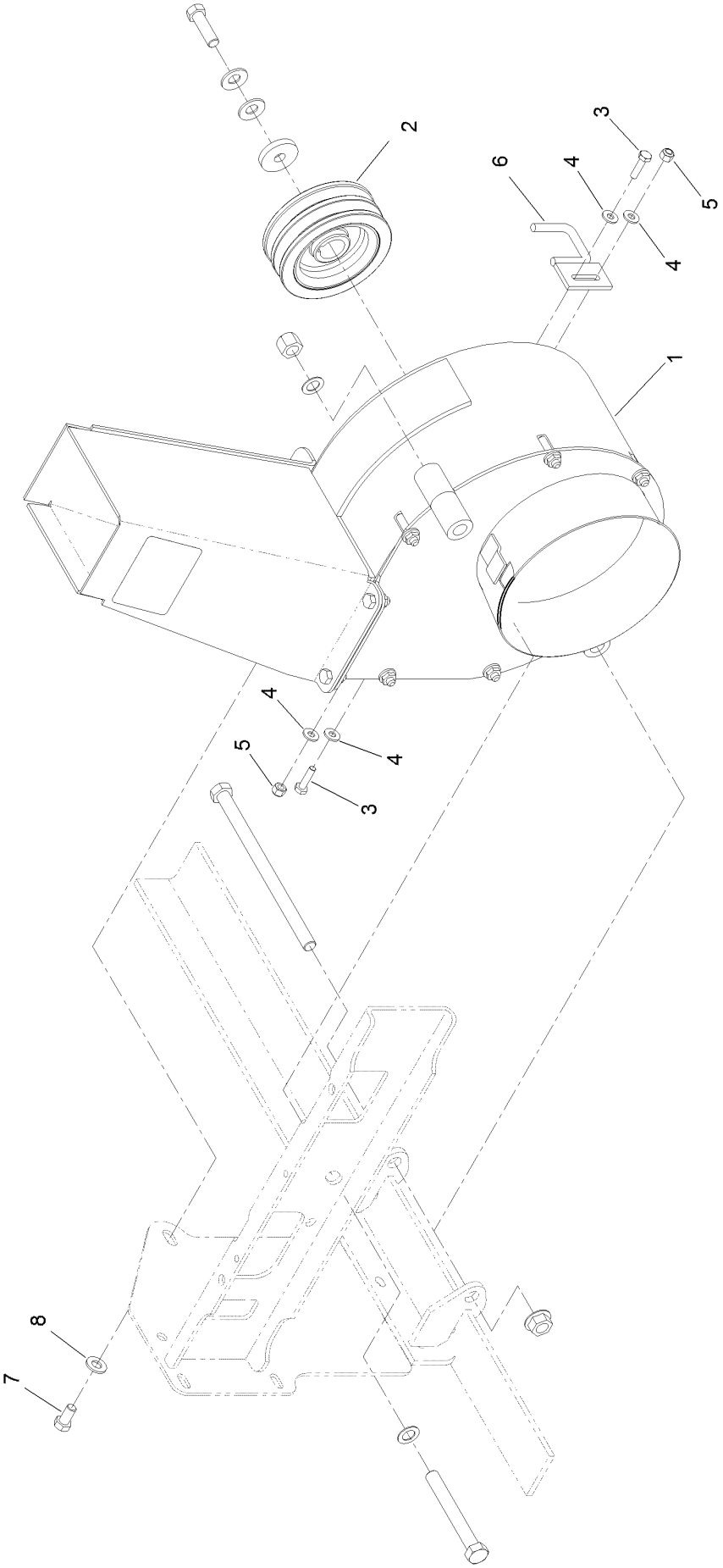

Blower Mounting Assembly (continued)

Ref.	Part Number	Qty.	Description
1	116-9649	1	Blower ASM
2	103-6733	1	Sheave-Blower
3	321-6	2	Screw-HH
4	3256-22	4	Washer-Flat
5	3296-42	2	Nut-Lock, NI
6	103-9167-03	1	Guide
7	323-4	1	Screw-HH
8	3256-24	1	Washer-Flat

Blower Assembly No. 116-9649

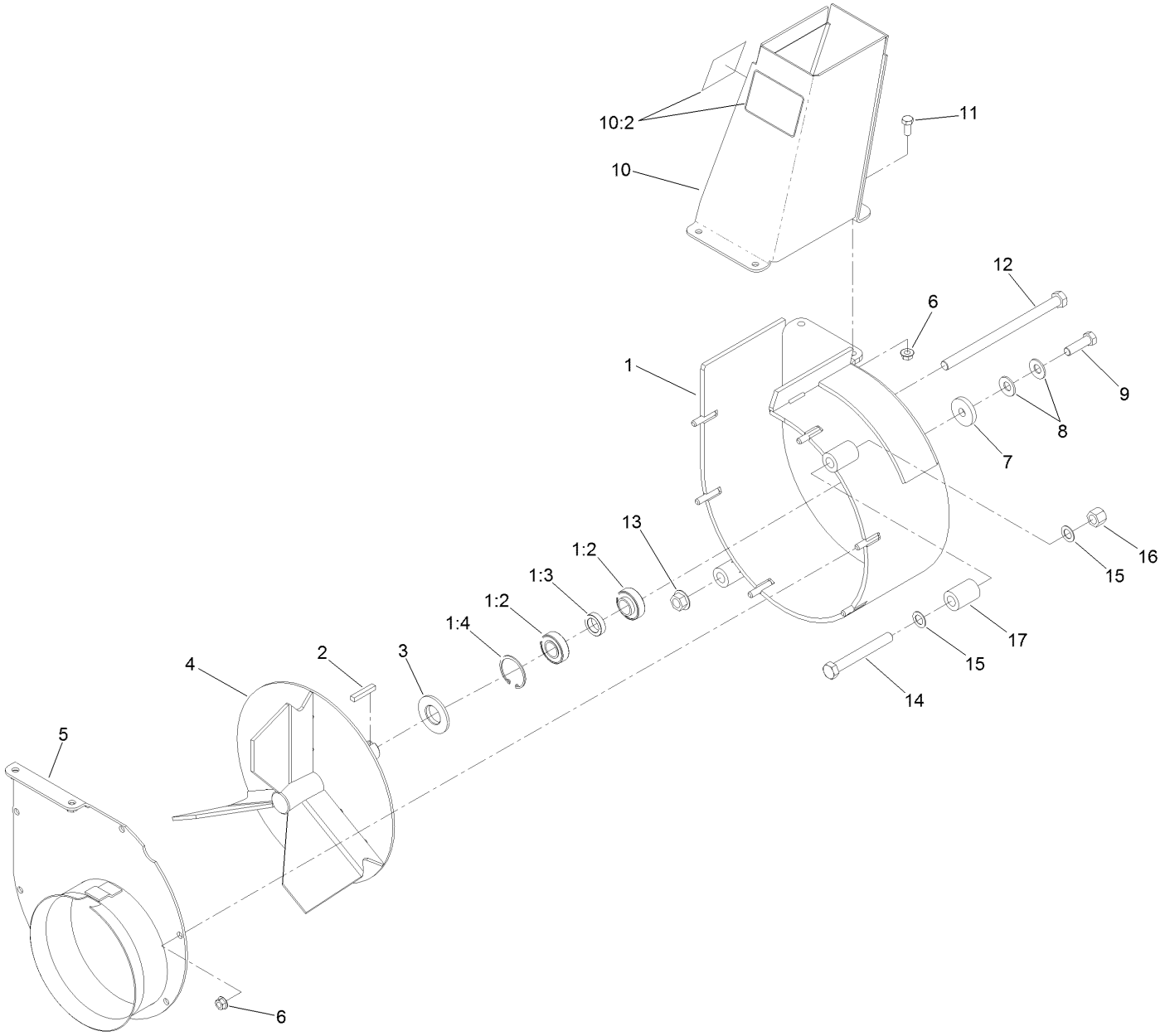

Blower Assembly No. 116-9649 (continued)

Ref.	Part Number	Qty.	Description
1	116-9648	1	Housing ASM
1:2	103-3540	2	Bearing-Ball
1:3	103-4921	1	Spacer-Bearing
1:4	32120-8	2	Ring-Snap
2	67-7490	1	Key-Square
3	103-3894	1	Spacer-Blower
4	103-5194	1	Impeller-3 Blade
5	103-3370-03	1	Cover-Blower
6	32128-20	10	Nut-HF
7	1-543610	1	Washer-Clutch
8	1-603610	2	Washer-Spring
9	3212-6	1	Screw-HH
10	103-9474	1	Discharge Chute ASM
10:2	116-8943	2	Decal-Danger, Impeller
11	322-3	4	Screw-HH
12	325-42	1	Screw-HH
13	32128-23	1	Nut-HF
14	325-17	1	Screw-HH
15	18-9810	2	Washer-Thrust
16	3296-23	1	Nut-Lock, NI
17	103-6999	1	Spacer-Mount

Engine, Muffler and Air Cleaner Assembly

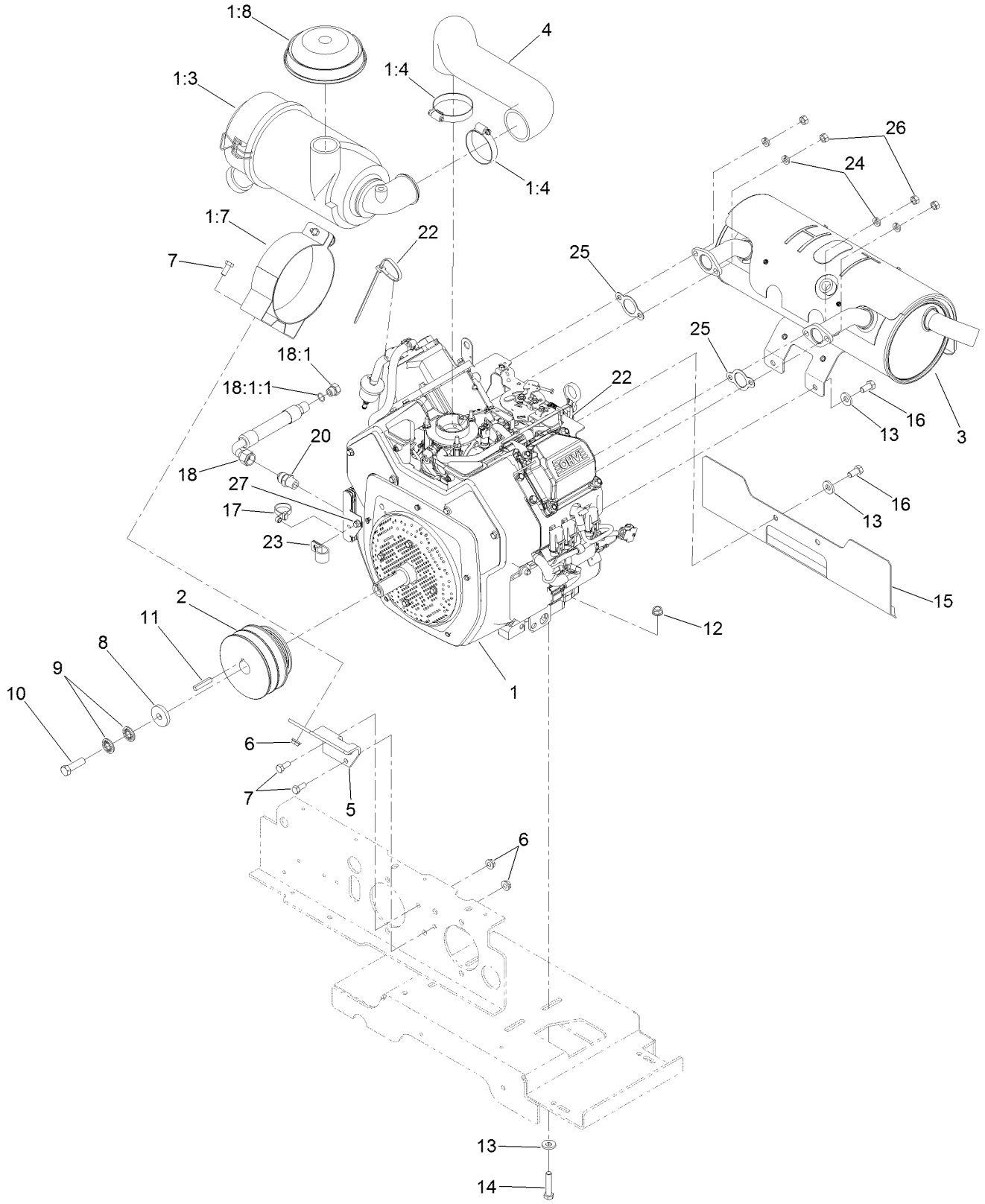

Engine, Muffler and Air Cleaner Assembly (continued)

Ref.	Part Number	Qty.	Description
1		1	Engine-Kohler, Ch640-3164 ●■
1:3	103-8569	1	Air Cleaner Canister ASM
1:4	2412-42	2	Clamp-Hose
1:7	103-1058	1	Bracket-Filter, Air
1:8	100-2436	1	Hood-Cleaner, 2" Air Intake
2	103-6731	1	Sheave-Engine
3	103-7444	1	Muffler
4	103-6961	1	Hose-Air Intake
5	103-3695-03	1	Bracket-Filter, Air
6	32128-20	4	Nut-HF
7	322-3	4	Screw-HH
8	1-543610	1	Washer-Clutch
9	1-603610	2	Washer-Spring
10	3212-6	1	Screw-HH ◆
11	67-7490	1	Key-Square
12	3290-357	4	Nut-HHF, Whiz
13	98-5975	8	Washer-Belleville
14	323-9	4	Screw-HH
15	109-0181-03	1	Shield-Exhaust
16	323-4	4	Screw-HH
17	109-7896	1	Tie-Cable
18	116-5338	1	Oil Drain Hose ASM
18:1	353-508	1	Plug-HH
18:1:1	237-42	1	O-Ring
20	116-1455	1	Fitting-Straight ▲
22	1-303335	3	Tie-Plastic
23	1-633396	1	Clip-Loom
24	1-805005	4	Washer-Lock
25	1-653291	2	Gasket-Exhaust
26	33014-00	4	Nut-Hex
27	126-4338	1	Screw-HH

● Not serviced separately
▲ Use a Teflon Pipe Sealant or equivalent on threads.
◆ Use Pro-Lock, Nut Type (P/N 1-840022, .5ml tube) on threads.
■ Obtain parts from www.kohlerplus.com

Fuel Assembly

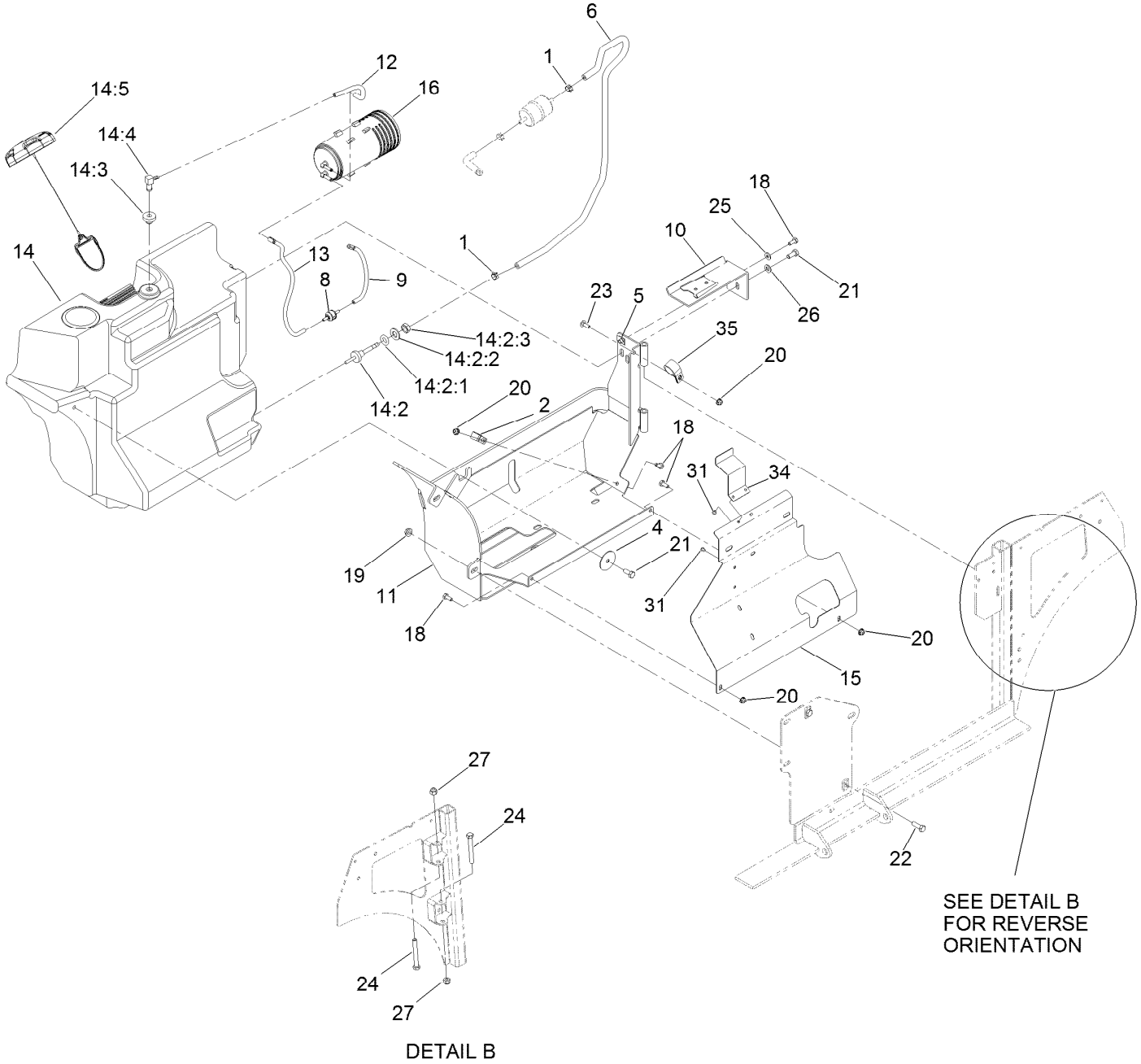

Fuel Assembly (continued)

Ref.	Part Number	Qty.	Description
1	2412-98	2	Clamp-Hose
2	1-513762	1	Clip-Loom
4	1-653036	1	Washer
5	107069	1	Clip
6	109-0284	1	Hose-Fuel
8	133-8499	1	Valve-Check, Vacuum
9	116-2619	1	Hose-Vent, Formed
10	116-2847-03	1	Canister Bracket ASM
11	116-2848-03	1	Tank Frame ASM
12	116-2966	1	Hose-Vent, Formed
13	116-2967	1	Hose-Vent, Formed
14	116-8365	1	Fuel Tank ASM
14:2	103-6057	1	Fitting-Fuel, Bulkhead ●
14:2:1	103-2784	1	O-Ring
14:2:2	3256-26	1	Washer-Flat
14:2:3	3220-5	1	Nut-Jam
14:3	46-6560	1	Bushing
14:4	100-1596	1	Fitting-90 DEG
14:5	120-5461	1	Cap-Fuel, Ratcheting
15	116-7928-03	1	Panel-Tank Shield
16	117-1221	1	Canister-Carbon, 800Cc
18	321-3	4	Screw-HH
19	32128-20	2	Nut-HF
20	104-7201	4	Nut-HF
21	322-3	2	Screw-HH ●
22	322-5	2	Screw-HH ■
23	3229-1	1	Screw-CARR
24	323-14	2	Screw-HH
25	3256-22	1	Washer-Flat
26	3256-23	1	Washer-Plain
27	3296-39	2	Nut-Lock, NI
31	1-803035	2	Rivet-Pop
34	116-4037-03	1	Bracket-Shield, Tank
35	110-0824	1	R-Clamp

● Use Pro-Lock, Nut Type (P/N 1-840022, .5ml tube) on threads.
■ Use Pro-Lock retaining type, Part no. 1-840023 (.5cc tube) on threads.

Electrical System Assembly

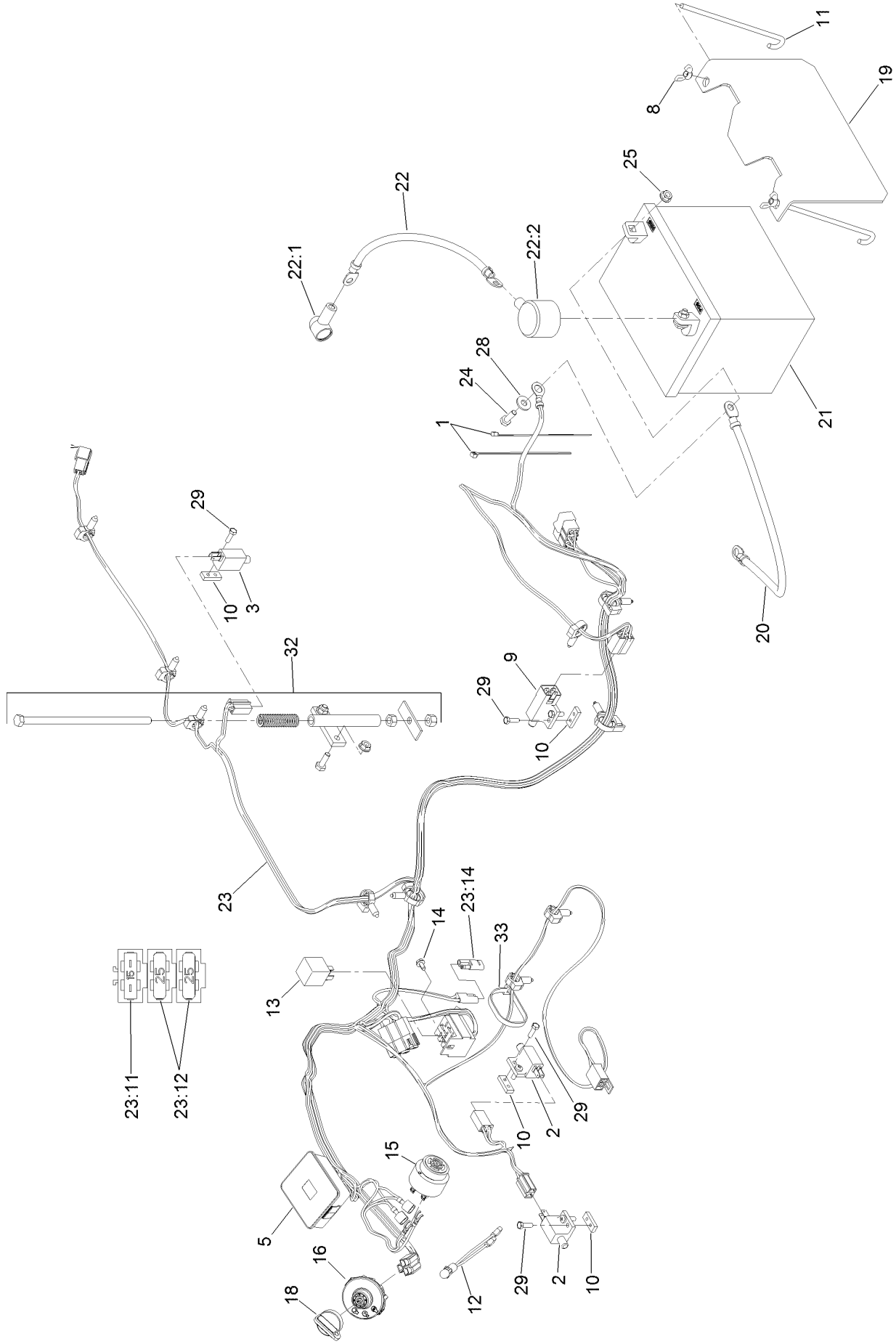

Electrical System Assembly (continued)

Ref.	Part Number	Qty.	Description
1	1-303287	2	Tie-Cable
2	1-513051	2	Switch-Open, Normally
3	1-513152	1	Switch-Closed, Normally
5	116-8812	1	Hour Meter ASM
8	1-543792	2	Wingnut
9	1-633111	1	Switch
10	1-633181	4	Plate-Tapped
11	1-633651	2	Bolt-Holddown
12	1-643267	1	Indicator-LED, Red
13	1-643275	1	Relay
14	104-2065	1	Screw-HWH
15	103-0205	1	Alarm-Tone, Dual
16	117-2221	1	Switch-Ignition
18	63-8360	1	Key-Ignition
19	103-4161-03	1	Hold Down-Battery
20	103-8355	1	Cable-Battery, Negative
21		1	Battery (300 CCA, Wet) ●■
22	116-4730	1	Cable-Battery, Positive
22:1	1-543393	1	Insulator-Solenoid
22:2	109-2407	1	Insulator-Battery
23	116-9114	1	Harness-Wiring ▲
23:11	109355	1	Fuse-Blade, 15 Amp
23:12	109102	2	Fuse-Blade, 25 Amp
23:14	116-0053	1	Cap-Plug
24	321-4	4	Screw-HH
25	32128-33	4	Nut-HF
28	3256-2	2	Washer-Flat
29	3290-134	8	Screw
32	103-8528	1	Hopper Switch Actuator ASM
33	1-303335	4	Tie-Plastic

● Obtain locally. ■ Not serviced separately

▲ Use dielectric grease on all unsealed connectors and terminals only. Do not apply in sealed connectors.

Hopper Switch Actuator Assembly No. 103-8528

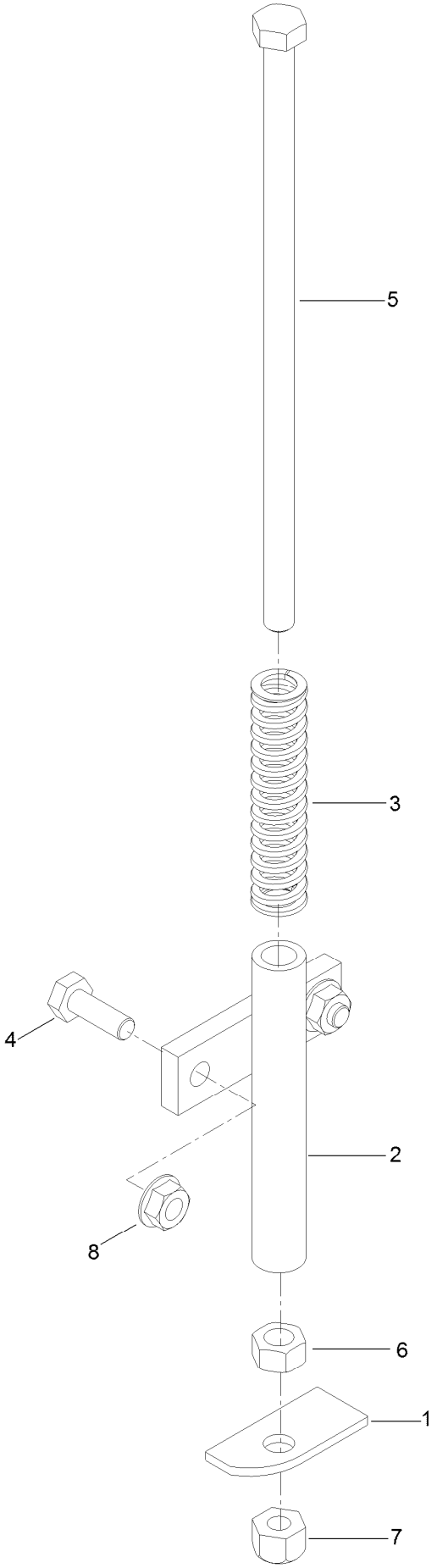

Hopper Switch Actuator Assembly No. 103-8528 (continued)

Ref.	Part Number	Qty.	Description
1	126-7505	1	Plate-Switch
2	1-522424-03	1	Mount-Spring, Seat
3	1-523415	1	Spring-Switch, Seat
4	321-4	2	Screw-HH
5	322-50	1	Screw-HH
6	3217-6	1	Nut-Hex
7	3296-29	1	Nut-Lock, NI
8	32128-33	2	Nut-HF

Hopper Mounting Assembly

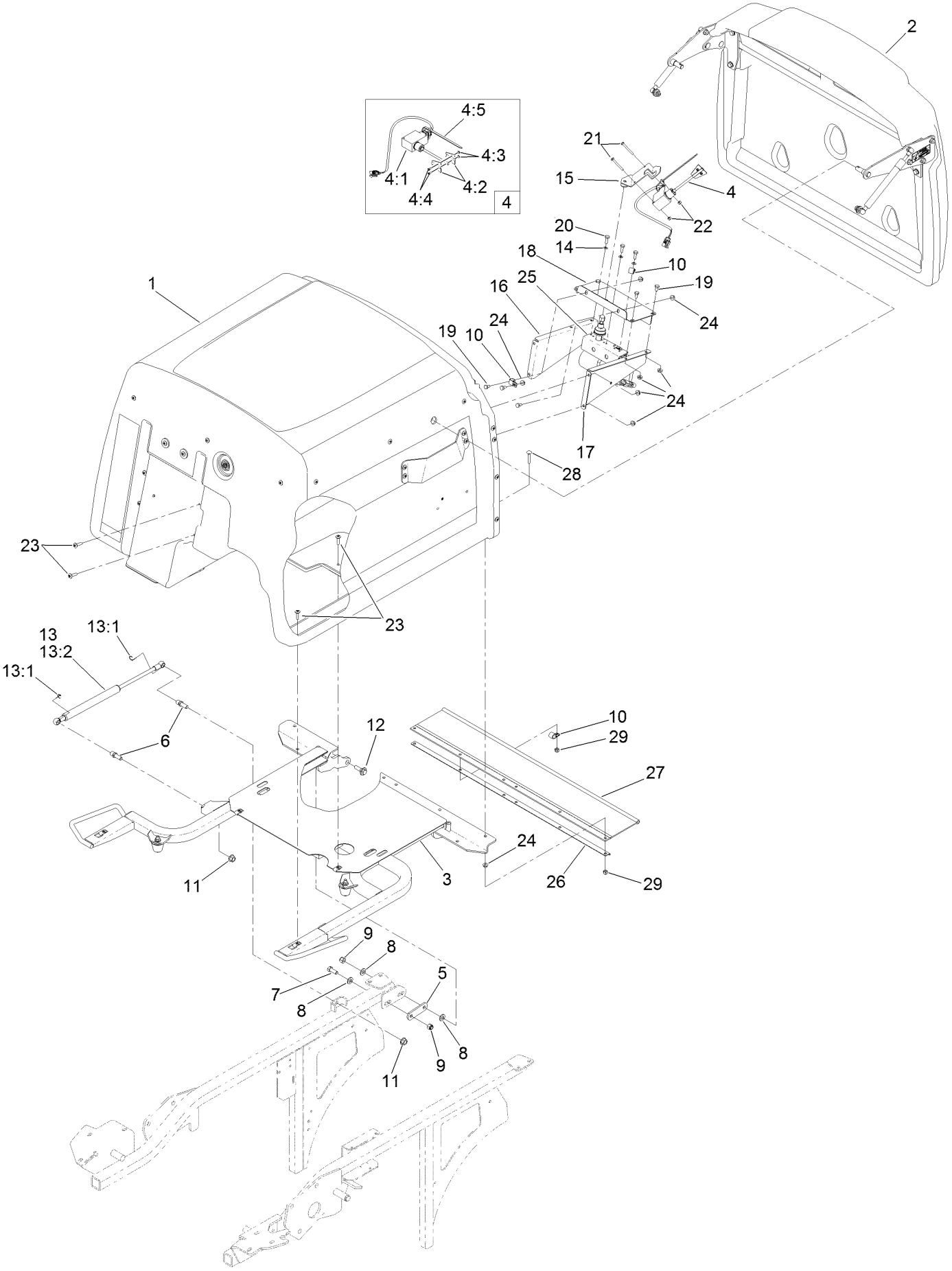

Hopper Mounting Assembly (continued)

Ref.	Part Number	Qty.	Description
1	130-2872	1	Hopper ASM
2	130-2875	1	Hopper Door ASM
3	109-4086	1	Hopper Frame ASM
4	116-9404	1	Fill Sensor ASM
4:1	109-3854	1	Fill Sensor Wire Kit
4:2	103-8789	2	Flag-Sensor, Fill
4:3	3296-9	2	Nut-Hex
4:4	9107622	2	Screw-Pan
4:5	1-303335	1	Tie-Plastic
5	1-633068	2	Arm-Lift, Deck
6	103-5426	2	Stud-Ball
7	323-6	2	Screw-HH
8	3256-24	6	Washer-Flat
9	3296-39	4	Nut-Lock, NI
10	1-513762	3	Clip-Loom
11	33005-00	2	Nut-HF
12	614672	2	Screw-Shoulder, HWH
13	109-0716	1	Damper Kit

Ref.	Part Number	Qty.	Description
13:1	103-8325	2	Clip-Retainer
13:2	103-5425	1	Shock-Compression, Gas
14	1-303435	3	Washer-Spring
15	109-3648	1	Mount-Switch
16	103-6067-03	1	Bracket-Drive Motor, LH
17	103-6068-03	1	Bracket-Drive Motor, RH
18	103-7085-03	1	Plate-Switch
19	321-2	7	Screw-HH
20	329-4	3	Screw-HH
21	3250-48	2	Screw-PPH
22	3296-2	2	Nut-Lock, NI
23	32105-32	8	Screw-TTH
24	32128-33	17	Nut-HF
25	103-9121	1	Motor Wiring ASM
26	103-6022-03	1	Channel-Frame, Hopper
27	103-6025	1	Deflector-Grass
28	3229-4	6	Screw-CARR
29	3296-42	6	Nut-Lock, NI

Hopper Assembly No. 130-2872

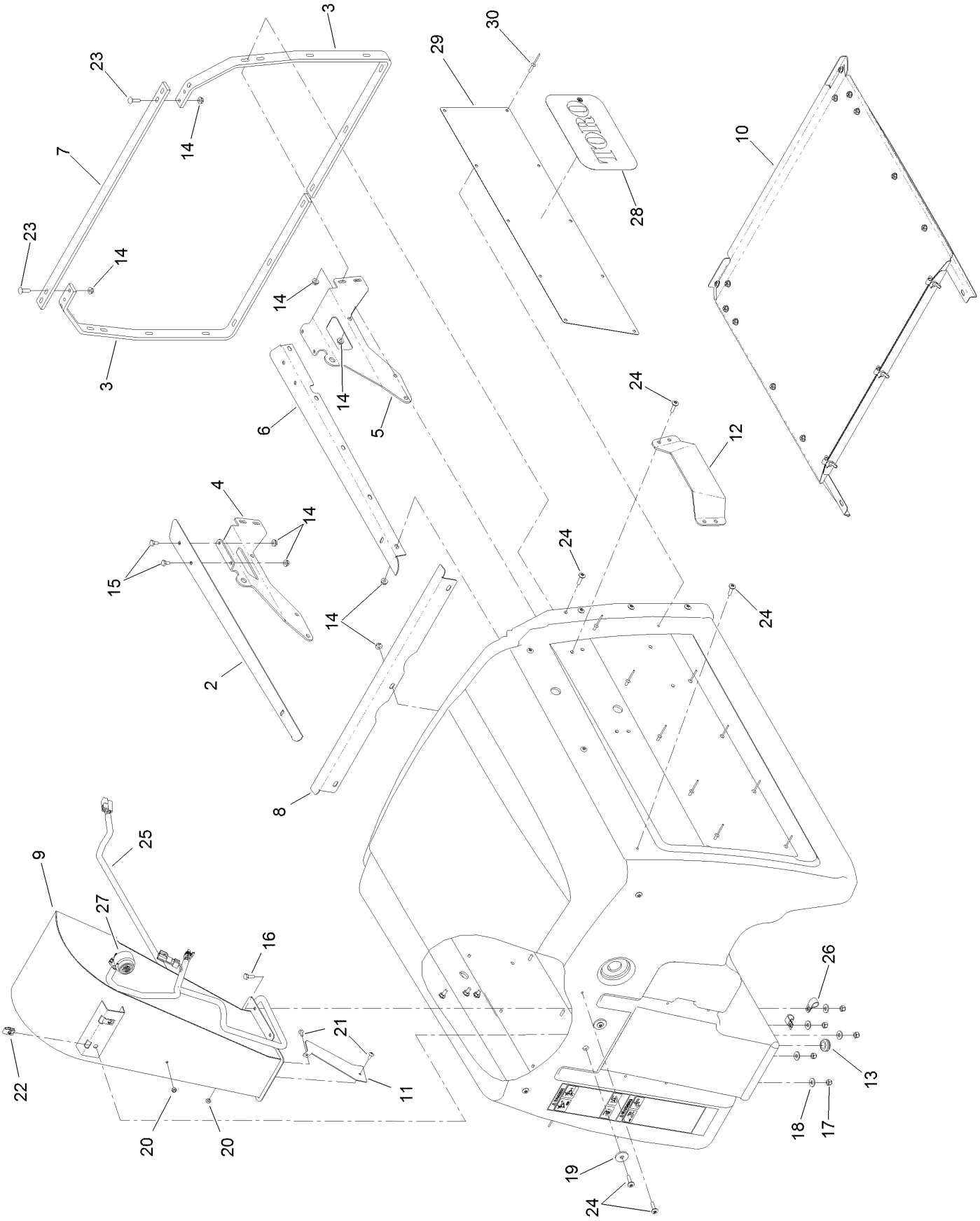

Hopper Assembly No. 130-2872 (continued)

Ref.	Part Number	Qty.	Description
2	103-5736-03	1	Angle-Screen Track, RH
3	103-5045-03	2	Reinforcement-Hopper
4	103-5751-03	1	Brace-Door Pivot, RH
5	103-5749-03	1	Brace-Door Pivot, LH
6	103-5774-03	1	Angle-Screen Track, LH
7	103-5772-03	1	Bracket-Frame Connect
8	103-7035-03	1	Channel-Screen, Front
9	109-3650-03	1	Diffuser
10	109-0717	1	Hopper Screen ASM
11	103-8680	1	Deflector-Discharge Chute
12	109-4019	2	Plate-Guard
13	1-543296	1	Grommet
14	32128-33	33	Nut-HF
15	321-2	4	Screw-HH
16	321-4	5	Screw-HH
17	3296-42	5	Nut-Lock, NI
18	3256-2	5	Washer-Flat
19	1-613235	2	Washer
20	3296-2	2	Nut-Lock, NI
21	32122-30	2	Screw-PTH
22	107069	2	Clip
23	3229-2	4	Screw-CARR
24	32105-32	27	Screw-TTH
25	103-8800	1	Harness-Wire, Hopper
26	1-513762	2	Clip-Loom
27	103-0205	1	Alarm-Tone, Dual
28	130-2885	2	Decal
29	130-2898-03	2	Plate-Hopper, Side
30	130-8451	20	Rivet-Trifold

Hopper Screen Assembly No. 109-0717

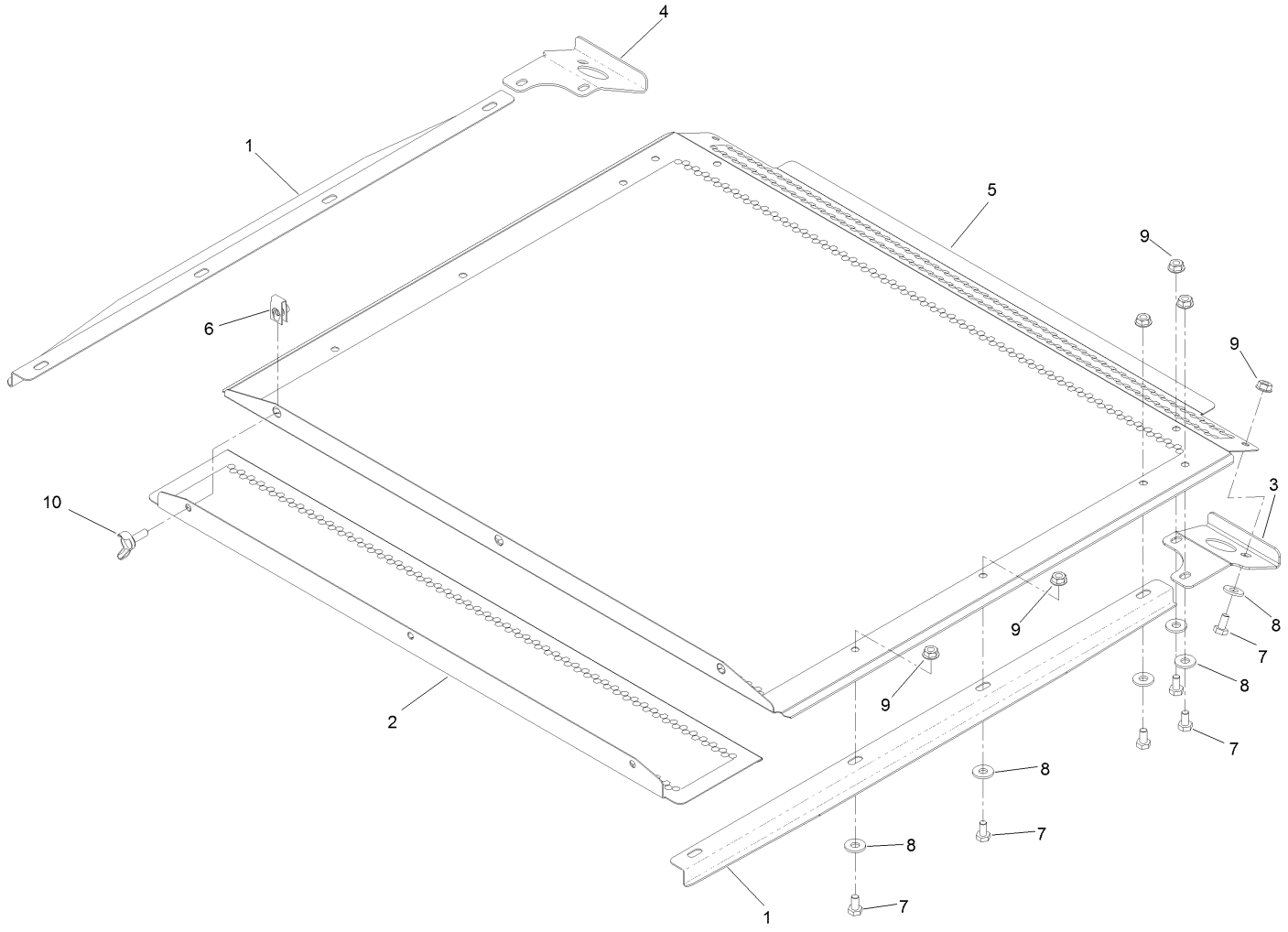

Hopper Screen Assembly No. 109-0717 (continued)

Ref.	Part Number	Qty.	Description
1	103-8203-03	2	Guide-Screen
2	103-7048-03	1	Panel-Screen, Removable
3	103-7098-03	1	Handle-Screen, LH
4	103-7099-03	1	Handle-Screen, RH
5	103-5745-03	1	Panel-Screen, Hopper
6	107069	3	Clip
7	321-2	12	Screw-HH
8	3256-2	12	Washer-Flat
9	32128-33	12	Nut-HF
10	109-1063	3	Screw-Wing

Hopper Door Assembly No. 130-2875

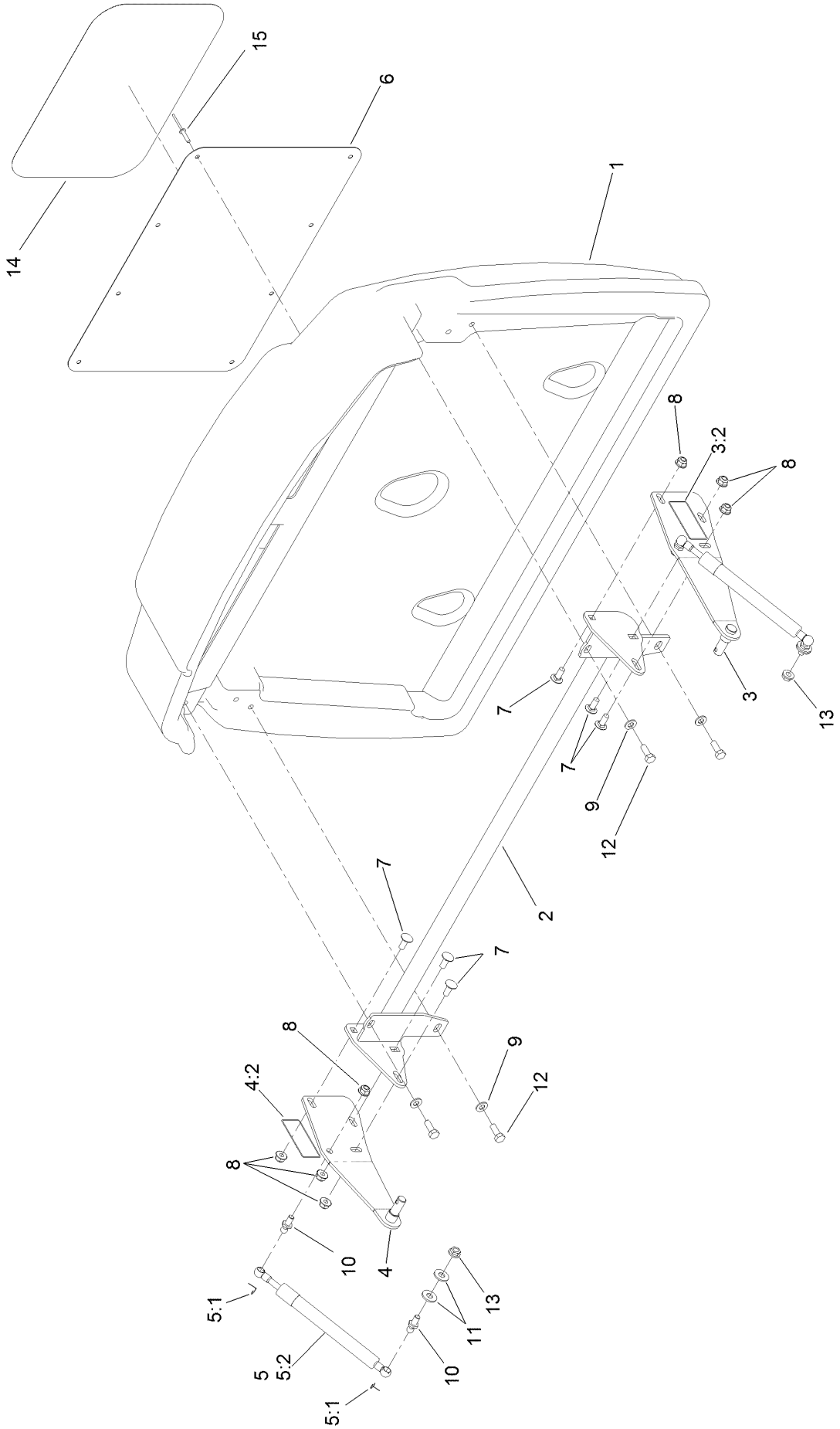

Hopper Door Assembly No. 130-2875 (continued)

Ref.	Part Number	Qty.	Description
1	130-2877	1	Door-Hopper
2	109-4153-03	1	Support-Door
3	109-4253	1	LH Door Pivot ASM
3:2	120-0625	1	Decal-Warning
4	109-4254	1	RH Door Pivot ASM
4:2	120-0625	1	Decal-Warning
5	109-0715	2	Damper Kit
5:1	103-8324	2	Clip-Retainer
5:2	103-5746	1	Shock-Gas Tension
6	130-8450-03	1	Plate-Door, Hopper
7	3230-23	6	Screw-CARR
8	104-8300	8	Nut-HF, NI
9	3256-23	4	Washer-Plain
10	103-5752	4	Stud-Ball
11	3256-3	4	Washer-Flat
12	322-4	4	Screw-HH
13	32128-20	2	Nut-HF
14	130-2886	1	Decal
15	130-8451	8	Rivet-Trifold

Hopper Frame Assembly No. 109-4086

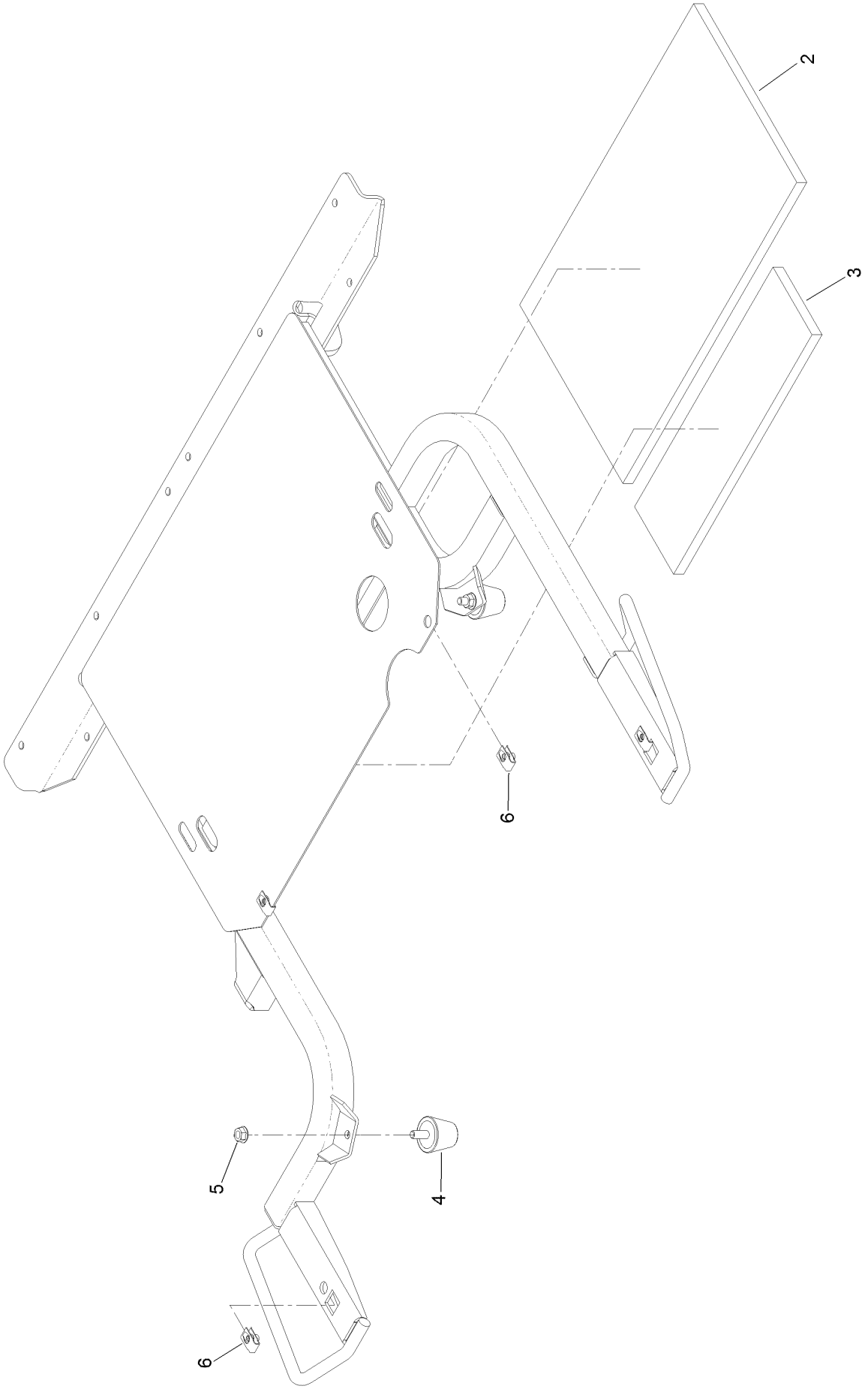

Hopper Frame Assembly No. 109-4086 (continued)

Ref.	Part Number	Qty.	Description
2	103-7824	1	Insulation-Foam Pad, Rear
3	103-7825	1	Insulation-Foam Pad, Front
4	1-543963	2	Bumper-Rubber
5	32128-20	2	Nut-HF
6	107069	4	Clip

Drive Assembly

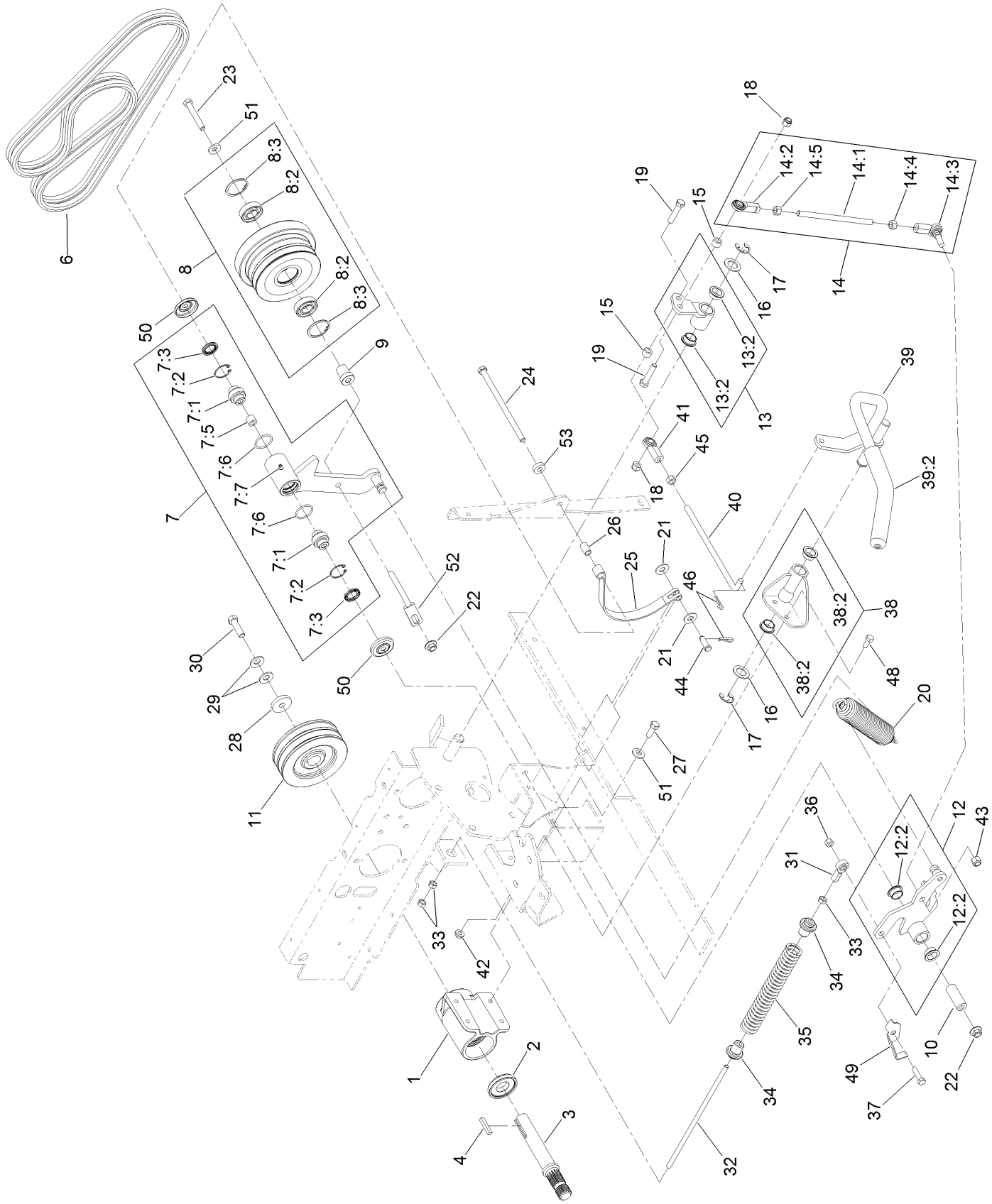

Drive Assembly (continued)

Ref.	Part Number	Qty.	Description
1	103-2544	1	Jackshaft ASM
2	103-2535	1	Spacer-Guard, Bottom
3	103-6735	1	Jackshaft
4	67-7490	1	Key-Square
6	130-2870	1	Belts-Pair, Matched
7	103-8253	1	Idler Pivot ASM
7:1	103-3504	2	Bearing-Spherical
7:2	32120-10	2	Ring-Snap
7:3	103-3506	2	Seal-Lip, Single
7:5	1-413088	1	Bushing-Lever, Lift
7:6	106-7159	2	O-Ring
7:7	302-19	1	Fitting-Grease
8	103-9439	1	Idler Sheave ASM
8:2	251-347	2	Bearing-Ball
8:3	32151-13	2	Ring-Retaining
9	103-7350	1	Spacer-Idler
10	103-7382	1	Bushing
11	103-6732	1	Sheave
12	103-9296	1	Arm ASM
12:2	108519	2	Bushing-Bronze
13	103-9297	1	Arm ASM
13:2	108519	2	Bushing-Bronze
14	103-7392	1	Clutch Link ASM
14:1	103-7393	1	Rod-Linkage
14:2	103-1167	1	Joint-Ball End, LH
14:3	103-7994	1	Balljoint-RH
14:4	3219-3	1	Nut-Hex
14:5	3219-20	1	Nut-Hex, LH
15	92-9025	2	Spacer
16	1-303007	2	Washer
17	32151-48	2	E-Ring
18	3296-39	2	Nut-Lock, NI
19	323-9	2	Screw-HH
20	109-0148	1	Spring-Extension

Ref.	Part Number	Qty.	Description
21	3256-4	2	Washer-Flat
22	32128-19	2	Nut-HF Lock,Large Flg
23	323-12	1	Screw-HH
24	323-36	1	Screw-HH
25	103-7697	1	Band-Brake
26	103-9816	1	Spacer
27	323-6	4	Screw-HH
28	1-543610	1	Washer-Clutch
29	1-603610	2	Washer-Spring
30	3212-6	1	Screw-HH
31	1-543017	1	Balljoint-RH
32	103-7996	1	Linkage-Rod, PTO Brake
33	3219-2	3	Nut-Hex
34	103-8254	2	Bushing-Spring
35	103-7997	1	Spring-Brake
36	3296-29	1	Nut-Lock, NI
37	322-6	1	Screw-HH
38	103-9295	1	Pivot ASM
38:2	108519	2	Bushing-Bronze
39	103-9486	1	PTO Handle ASM
39:2	103-8153	1	Grip-Lever, Control
40	103-8277	1	Link-Handle
41	103-0608	1	Joint-Ball, End
42	32128-20	2	Nut-HF
43	3296-6	1	Nut-Lock
44	283-2	1	Pin-Clevis
45	3219-3	1	Nut-Hex
46	1-806003	2	Pin-Cotter
48	322-3	2	Screw-HH
49	103-8716-03	1	Switch-Flag
50	103-2916	2	Guard-Top
51	98-5975	5	Washer-Belleville
52	109-5491	1	Guide-Belt
53	5-0652	1	Spacer

Deck Mounting Assembly

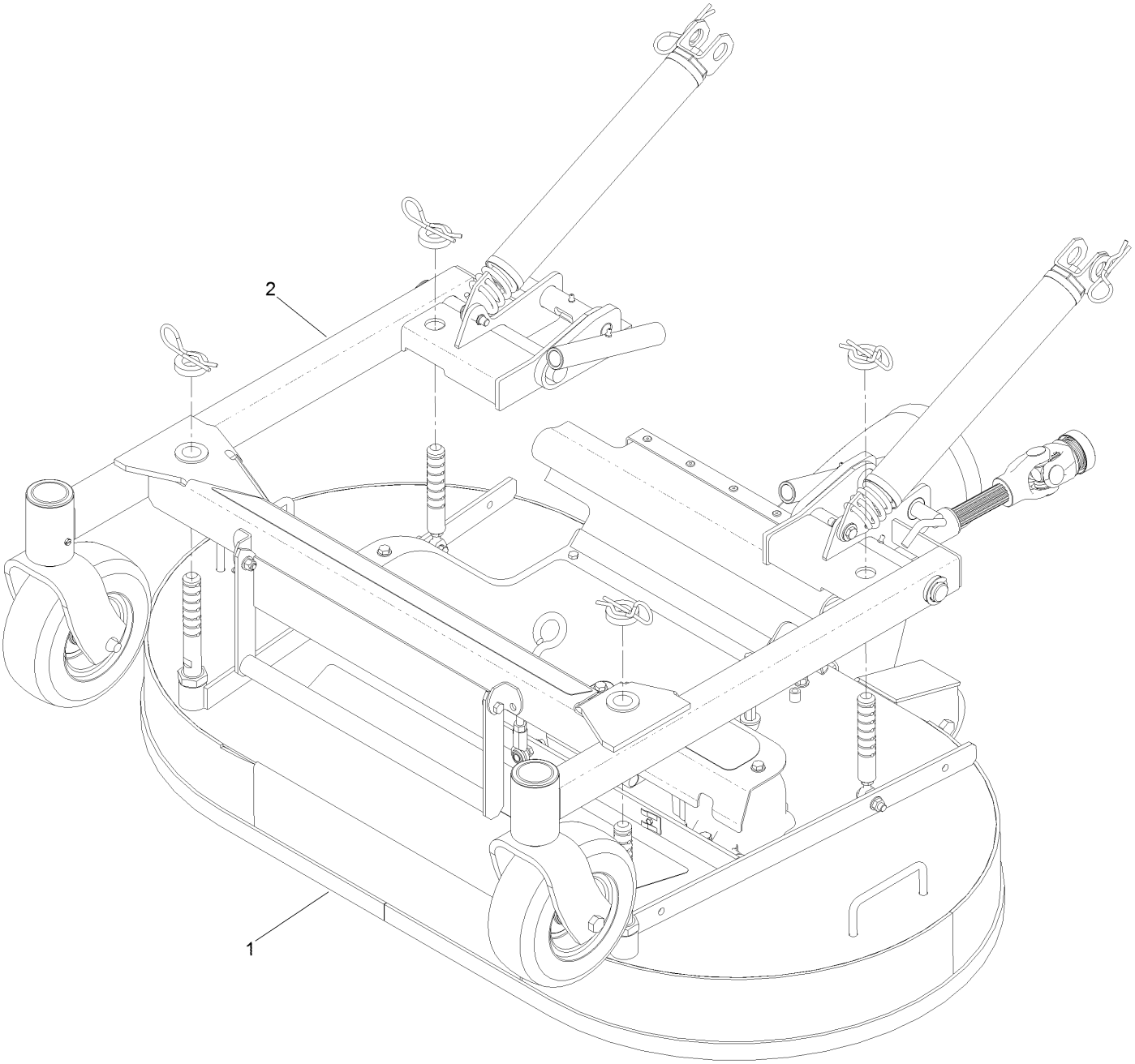

Deck Mounting Assembly (continued)

Ref.	Part Number	Qty.	Description
1		1	Deck ASM ●
2	130-2893	1	Deck Support Frame ASM

● Not serviced separately

Deck Assembly

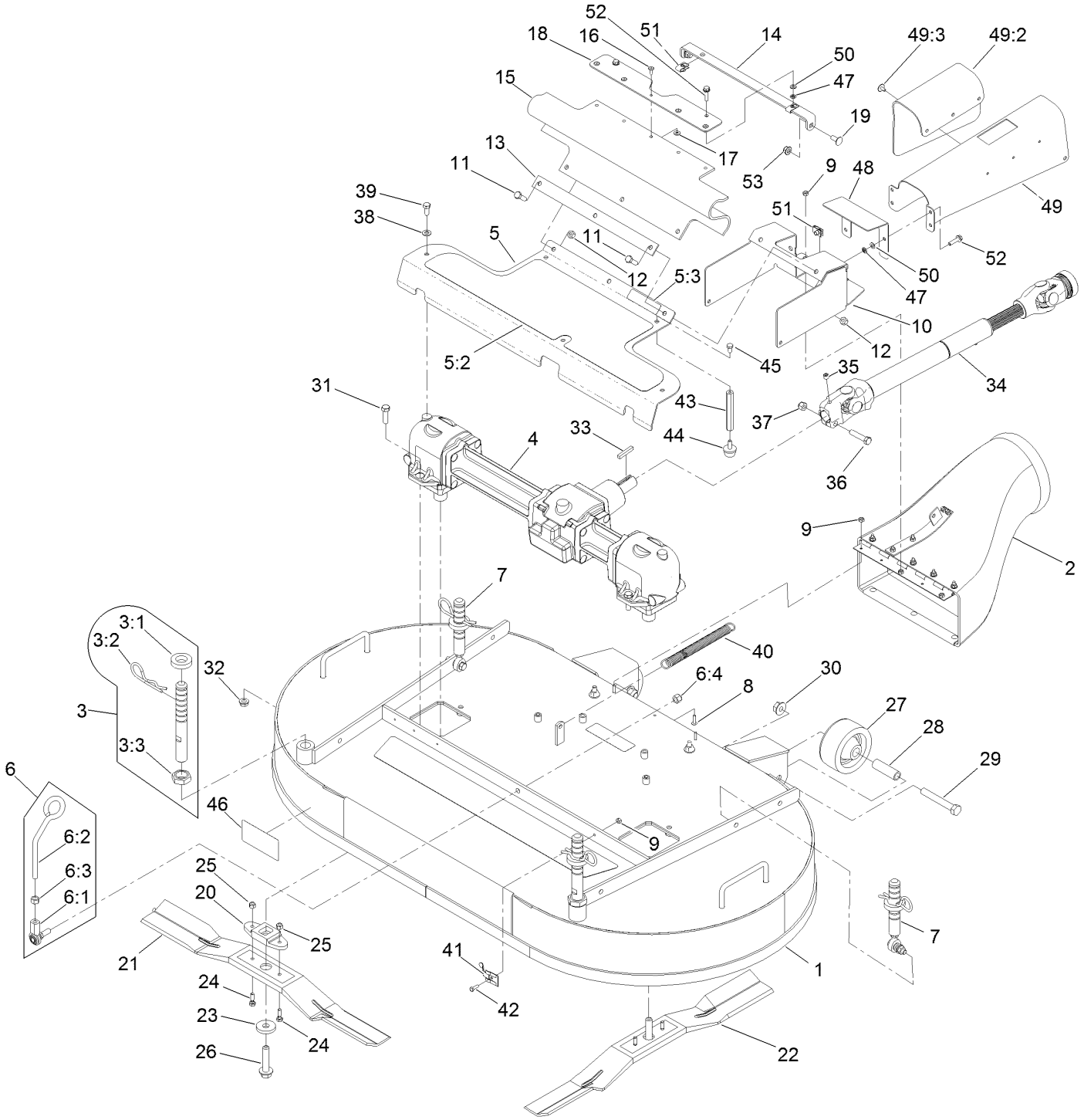

Deck Assembly (continued)

Ref.	Part Number	Qty.	Description
1	109-4372	1	Deck Decal And Baffle ASM
2	103-9487	1	Discharge Tube ASM
3	109-0321	2	Front Deck Height Adjust ASM
3:1	1-413425	1	Spacer-Deck Support
3:2	103-7353	1	Pin-Cut Height
3:3	103-8496	1	Nut-Jam
4	103-3387	1	Gear Box ASM
5	130-2899	1	Gearbox Cover ASM
5:2	103-8629	1	Pad-Anti Skid
5:3	119-0217	1	Decal-Danger
6	103-8363	1	Deck Latch ASM
6:1	103-7994	1	Balljoint-RH
6:2	103-8307	1	Latch-Deck
6:3	3219-3	1	Nut-Hex
6:4	3296-6	1	Nut-Lock
7	109-0323	2	Rear Deck Height Adjust ASM
8	1-803075	3	Screw-Head, Truss
9	3296-2	6	Nut-Lock, NI
10	133-1870-01	1	Guard-PTO, Front
11	322-5	3	Screw-HH
12	3296-29	3	Nut-Lock, NI
13	103-6290-03	1	Strap-Drive, Line Cover
14	136-1661-03	1	Mount-Guard
15	103-5979	1	Guard-PTO
16	114439	5	Rivet-Blind
17	3256-14	5	Washer-Flat
18	136-1660-03	1	Plate-Guard
19	3230-23	2	Screw-CARR
20	103-7705	2	Driver-Blade
21	130-2862	1	Blade-25In, RH
22	130-2861	1	Blade-25In, LH
23	30-8770	2	Washer
24	99-0283	4	Bolt-Shear
25	3296-42	4	Nut-Lock, NI
26	92-5816	2	Bolt-Blade
27	103-3700	2	Roller-Deck
28	103-4230	2	Spacer-Roller
29	325-14	2	Screw-HH
30	32128-49	2	Nut-HHF
31	323-7	4	Screw-HH
32	3290-357	4	Nut-HHF, Whiz
33	67-7490	1	Key-Square
34	103-9485	1	Drive Shaft ASM
35	3247-2	1	Screw-Set, HSH
36	323-9	1	Screw-HH
37	3296-39	1	Nut-Lock, NI
38	3256-23	3	Washer-Plain
39	322-3	3	Screw-HH
40	103-8841	1	Spring-Extension
41	1-513690	1	Clip-Deck, Hold Up Rod
42	3290-134	1	Screw
43	103-8610	2	Stand-Off
44	1-523420	2	Bumper
45	321-2	2	Screw-HH
46	130-2887	1	Decal
47	106-8737	6	Nut-Retainer
48	133-1871-01	1	Guard-PTO
49	133-1877	1	PTO Guard ASM
49:2	133-1883	1	Flap-Rubber
49:3	1-803035	6	Rivet-Pop
50	3256-60	6	Washer-Flat
51	107069	6	Clip
52	120-4654	6	Screw-HHF
53	104-8300	2	Nut-HF, NI

Deck Decal Assembly No. 109-4372

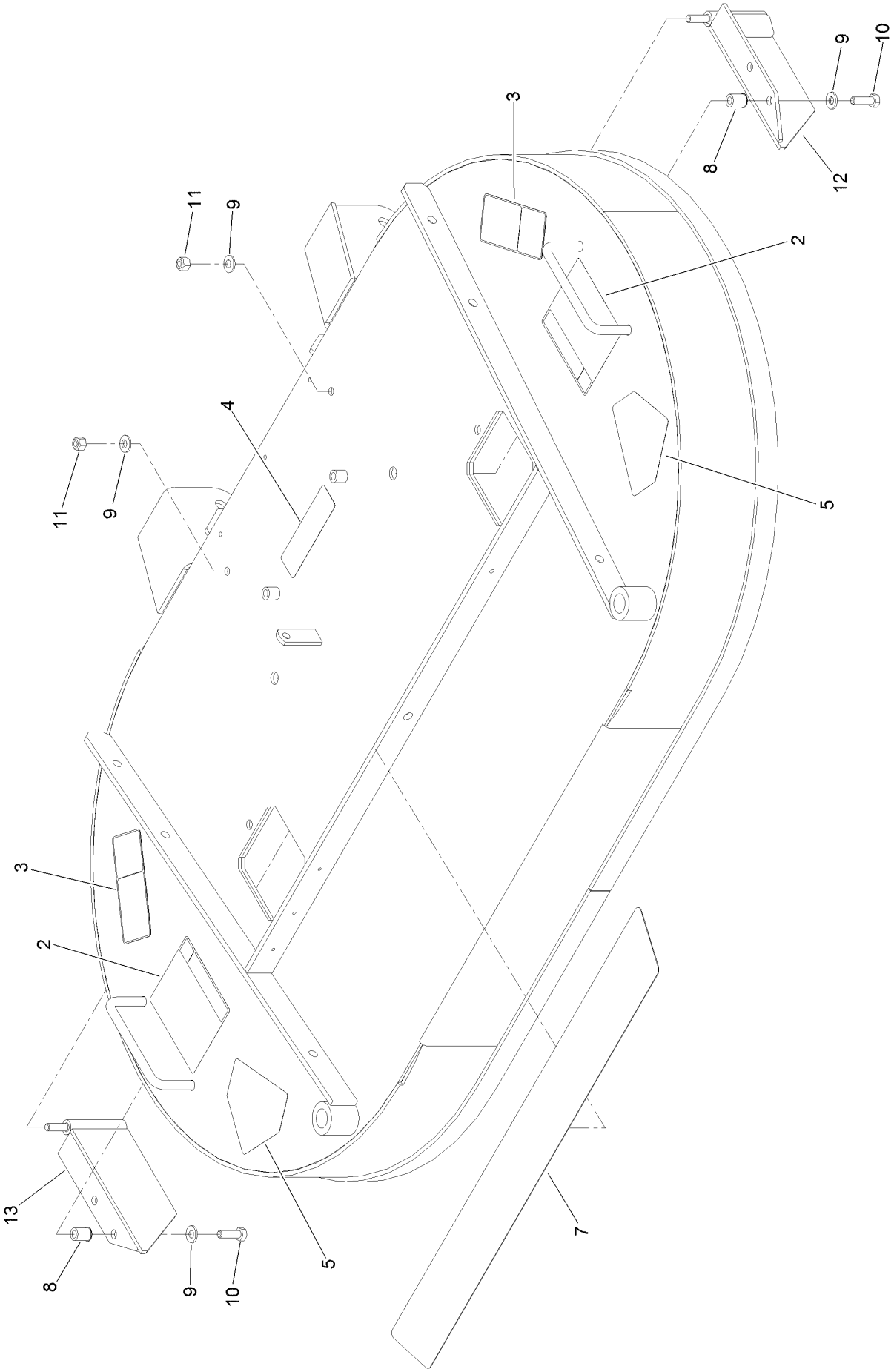

Deck Decal Assembly No. 109-4372 (continued)

Ref.	Part Number	Qty.	Description
2	116-8934	2	Decal-Height Adjust, Cutting
3	93-7818	2	Decal-Torque, Blade Bolt
4	112-9028	1	Decal-Cover, Missing
5	112-8760	2	Decal-Danger
7	103-8630	1	Pad-Anti Skid
8	32148-7	4	Nut-Clinch
9	1-303334	4	Washer-Spring
10	322-5	2	Screw-HH
11	3296-29	2	Nut-Lock, NI
12	109-4053-01	1	Baffle-LH
13	109-4054-01	1	Baffle-RH

Discharge Tube Assembly No. 103-9487

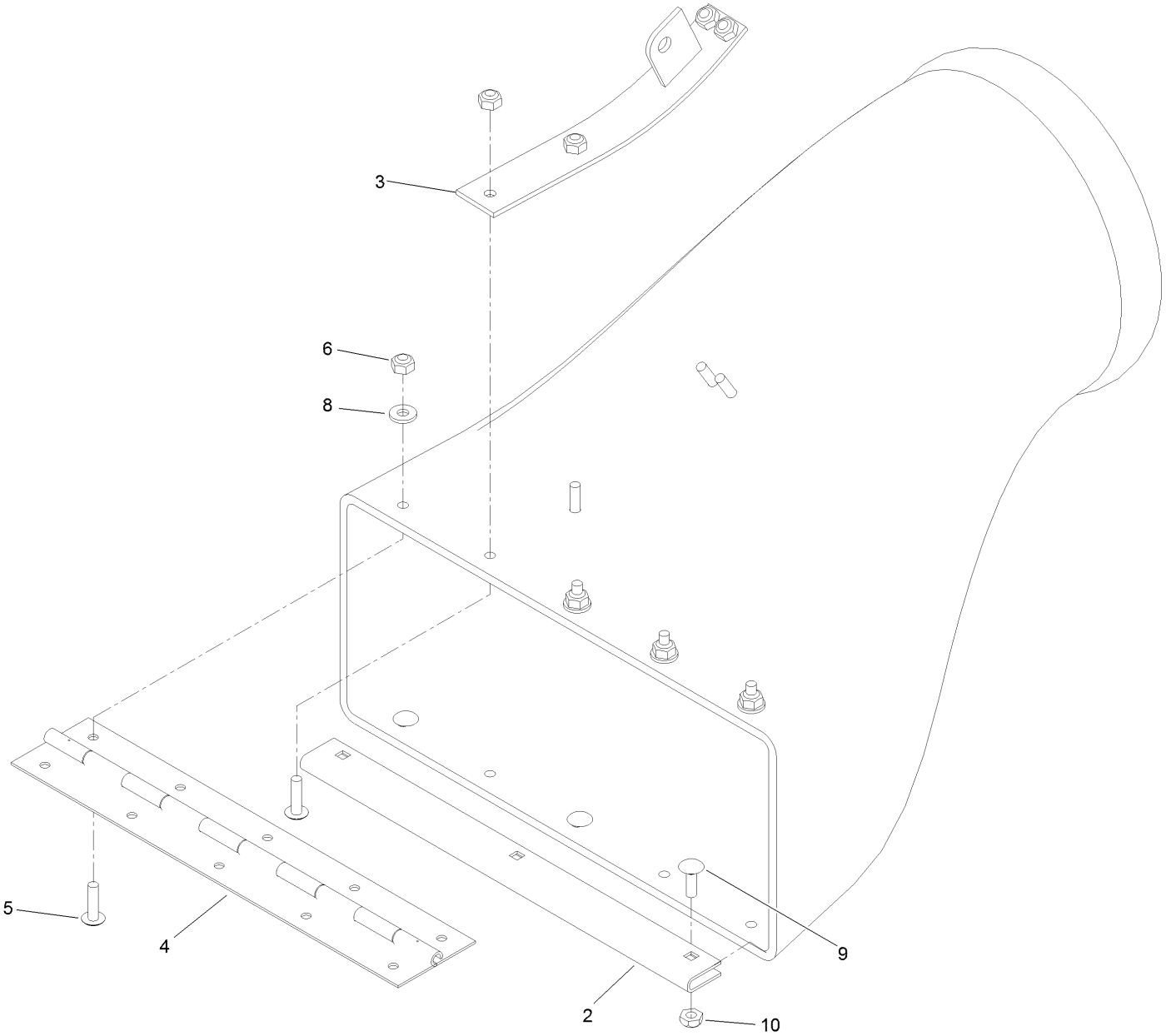

Discharge Tube Assembly No. 103-9487 (continued)

Ref.	Part Number	Qty.	Description
2	109-2228-03	1	Guard-Plenum
3	103-5868-01	1	Mount-Spring
4	103-4974	1	Hinge-Piano
5	1-803075	8	Screw-Head, Truss
6	3296-2	8	Nut-Lock, NI
8	3256-14	4	Washer-Flat
9	1-807533	3	Bolt-CARR
10	3296-12	3	Nut-Lock, NI

Gearbox Assembly No. 103-3387

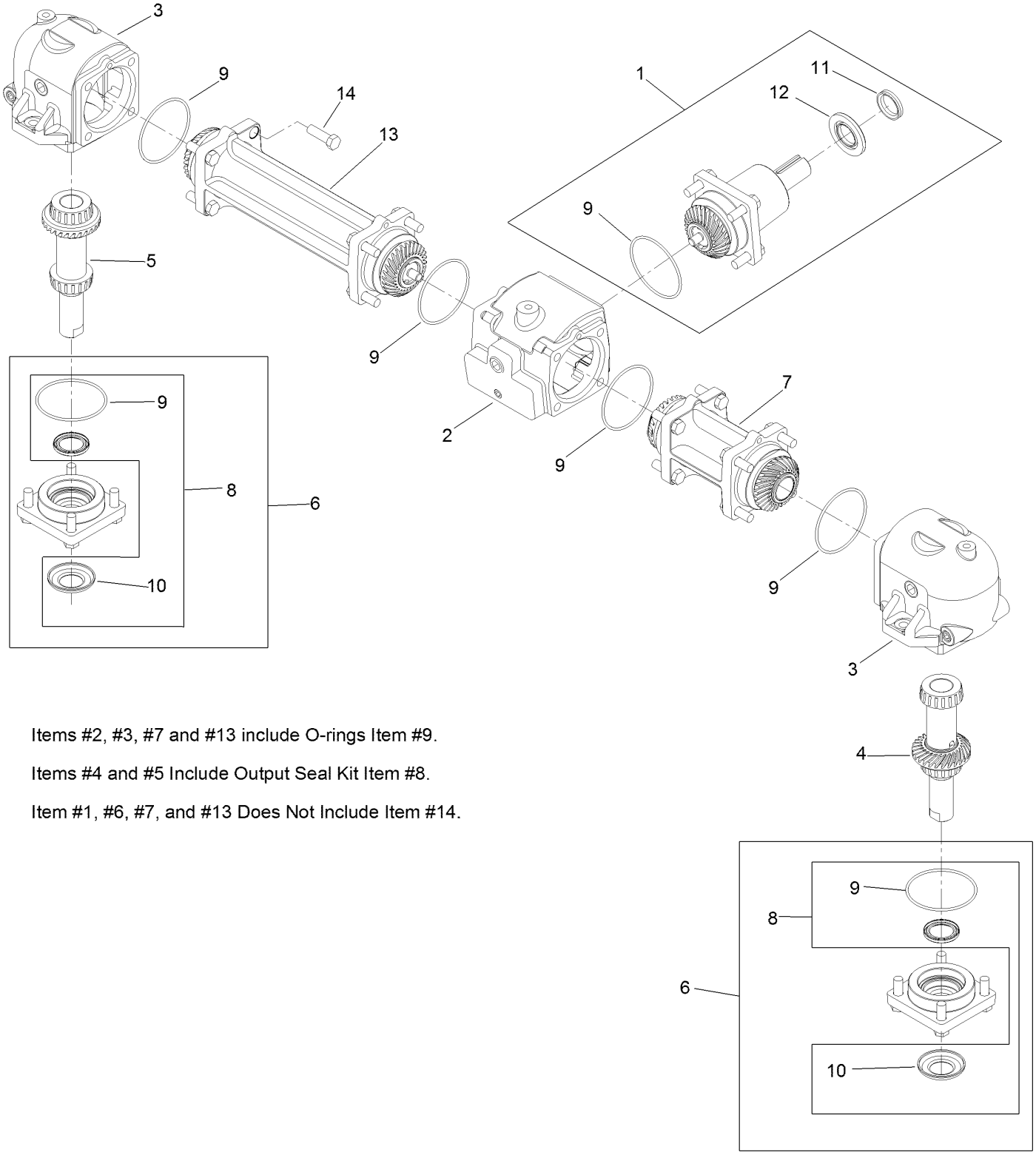

Items #2, #3, #7 and #13 include O-rings Item #9.

Items #4 and #5 Include Output Seal Kit Item #8.

Item #1, #6, #7, and #13 Does Not Include Item #14.

Gearbox Assembly No. 103-3387 (continued)

Ref.	Part Number	Qty.	Description
1	109-0189	1	Pinion-Input
2	109-0190	1	Housing-Center
3	109-0191	1	Housing-End
4	109-0193	1	Output Shaft And Gear-LH
5	109-0195	1	Output Shaft And Gear-RH
6	109-0196	1	Cap-Output
7	109-0198	1	Tube-Connector, Shor
8	109-0201	1	Output Seal Kit
9	109-0203	1	Seal-O-Ring
10	109-0204	1	Washer-Cupped
11	109-0205	1	Seal-V-Ring ●
12	109-0202	1	Seal-Input ●
13	109-0200	1	Connector-Tube, Long
14	93-3987	28	Bolt-Blade

● Apply bead of Mobil HTS grease (P/N 103-5217 1.5 oz packet) (or a food-grade anti-seize) between input seal and v-ring.

Rear Deck Height Adjustment
Assembly No. 109-0323

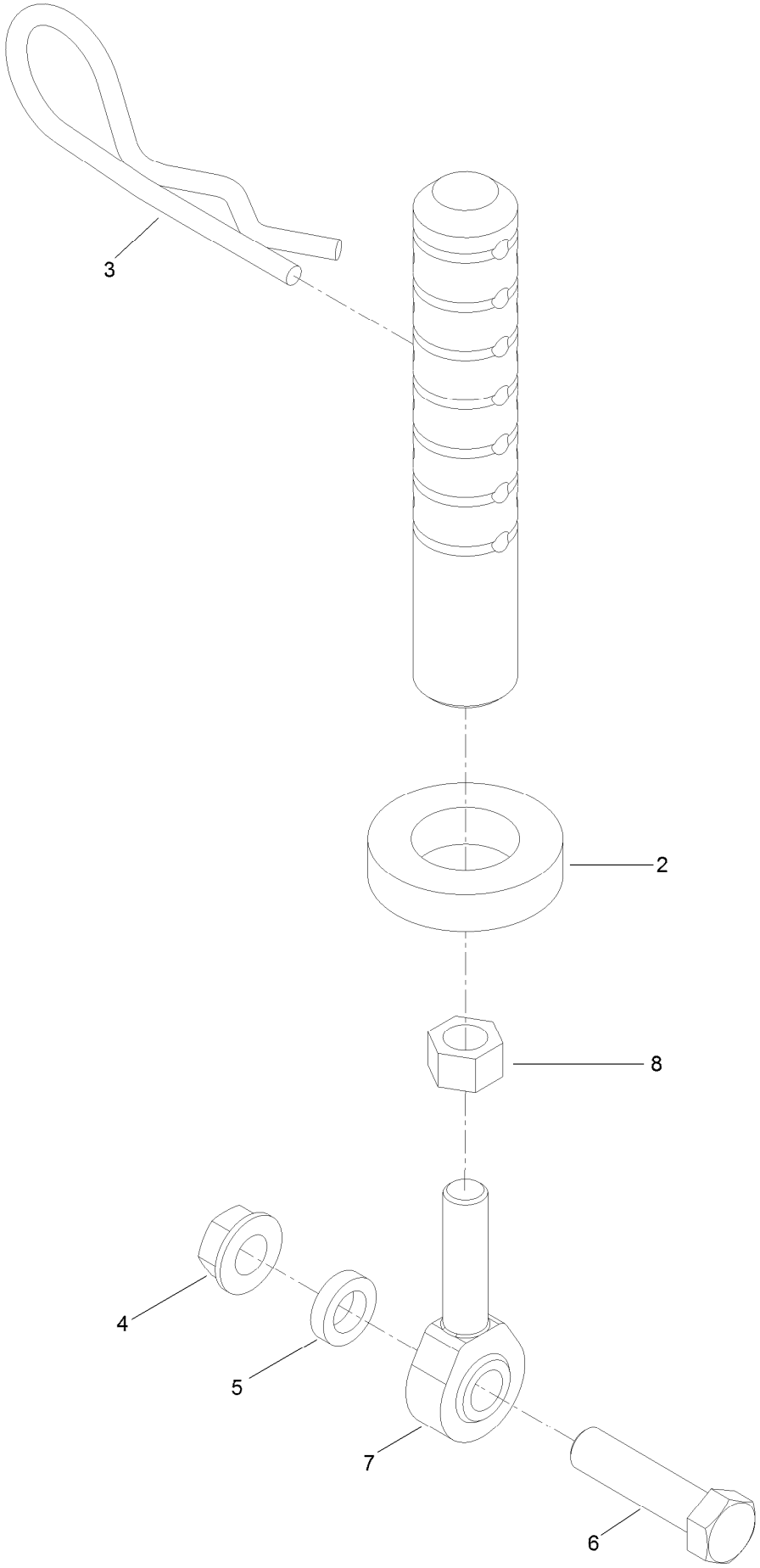

Rear Deck Height Adjustment
Assembly No. 109-0323 (continued)

Ref.	Part Number	Qty.	Description
2	1-413425	1	Spacer-Deck Support
3	103-7353	1	Pin-Cut Height
4	3290-357	1	Nut-HHF, Whiz
5	106-5597	1	Spacer-Idler
6	323-8	1	Screw-HH
7	1-613204	1	Balljoint
8	3220-3	1	Nut-HJ

Drive Shaft Assembly No. 103-9485

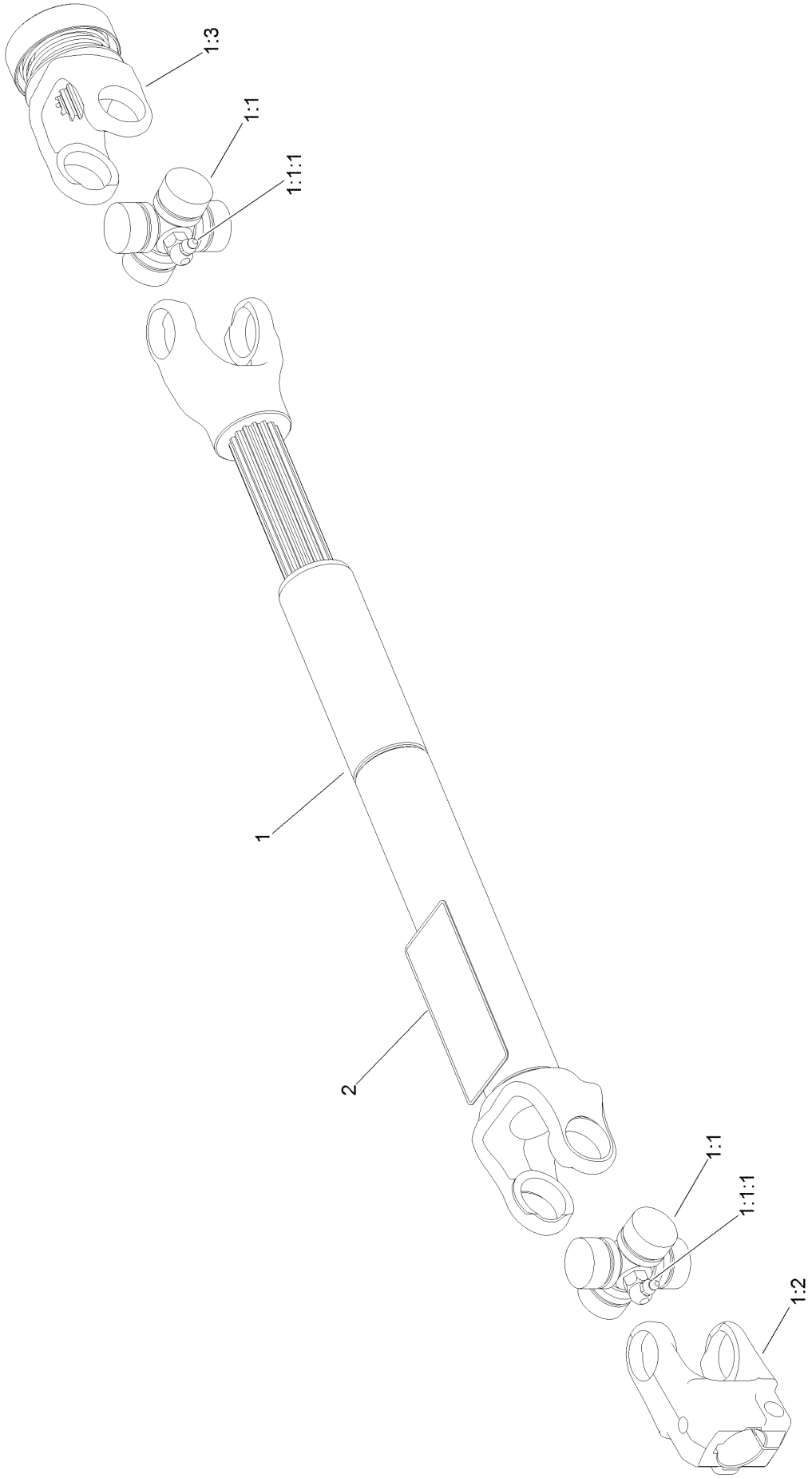

Drive Shaft Assembly No. 103-9485 (continued)

Ref.	Part Number	Qty.	Description
1		1	Drive Shaft-Telescoping ●
1:1	54-9180	2	U-Joint Kit
1:1:1	62-3820	1	Fitting-Grease
1:2	103-9328	1	Yoke-Keyed
1:3	103-9329	1	Yoke-Quick Disconnect
2	116-9049	1	Decal-Danger, Driveline

● Not serviced separately

Deck Support Frame Assembly No. 130-2893

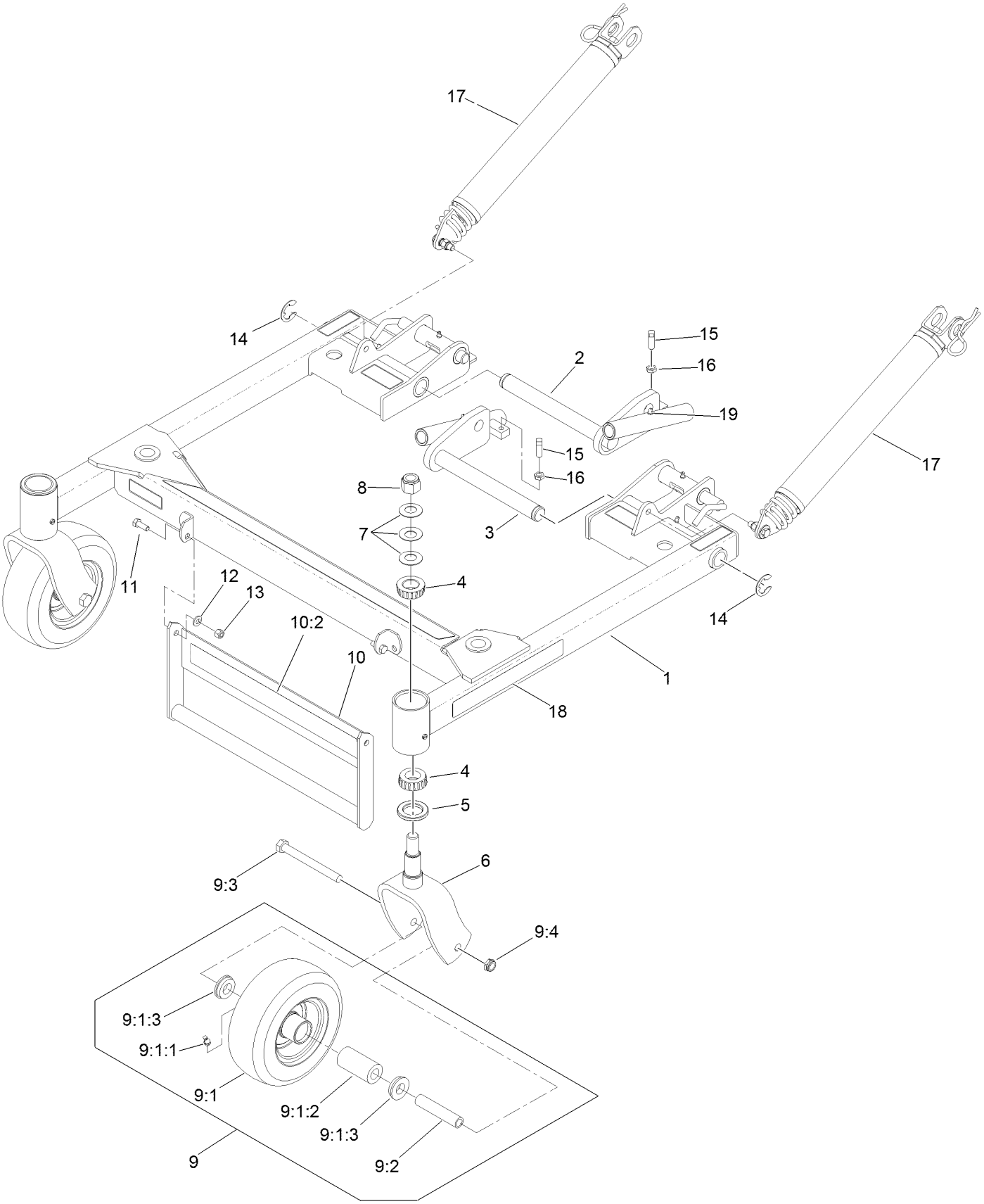

Deck Support Frame Assembly No. 130-2893 (continued)

Ref.	Part Number	Qty.	Description
1	103-9480	1	Deck Support ASM
2	103-3729-01	1	Pivot-Deck, RH
3	103-3732-01	1	Pivot-Deck, LH
4	1-543509	4	Bearing-Roller, Tapered
5	1-543511	2	Seal-Grease
6	109-1933-01	2	Fork-Caster
7	1-633508	6	Washer-Bellville
8	3296-51	2	Nut-Lock, NI
9	130-2867	2	Wheel And Axle ASM
9:1	130-2866	1	Wheel And Tire
9:1:1	302-61	1	Fitting-Grease
9:1:2	103-4588	1	Bearing-Roller, Straight
9:1:3	1-513810	2	Bushing
9:2	109-2094	1	Spacer-Caster, Front
9:3	325-19	1	Screw-HH
9:4	3296-45	1	Nut-Hex
10	130-2897	1	Deck Lift Handle ASM
10:2	130-2883	1	Decal
11	322-4	2	Screw-HH
12	1-303334	2	Washer-Spring
13	3296-29	2	Nut-Lock, NI
14	1-808519	2	Ring-Snap
15	3243-5	2	Screw-Set, SQH
16	3218-3	2	Nut-Jam
17	116-7851	2	Lift Assist Spring ASM
18	130-2884	2	Decal
19	302-19	2	Fitting-Grease

Deck Support W/Decals Assembly No. 103-9480

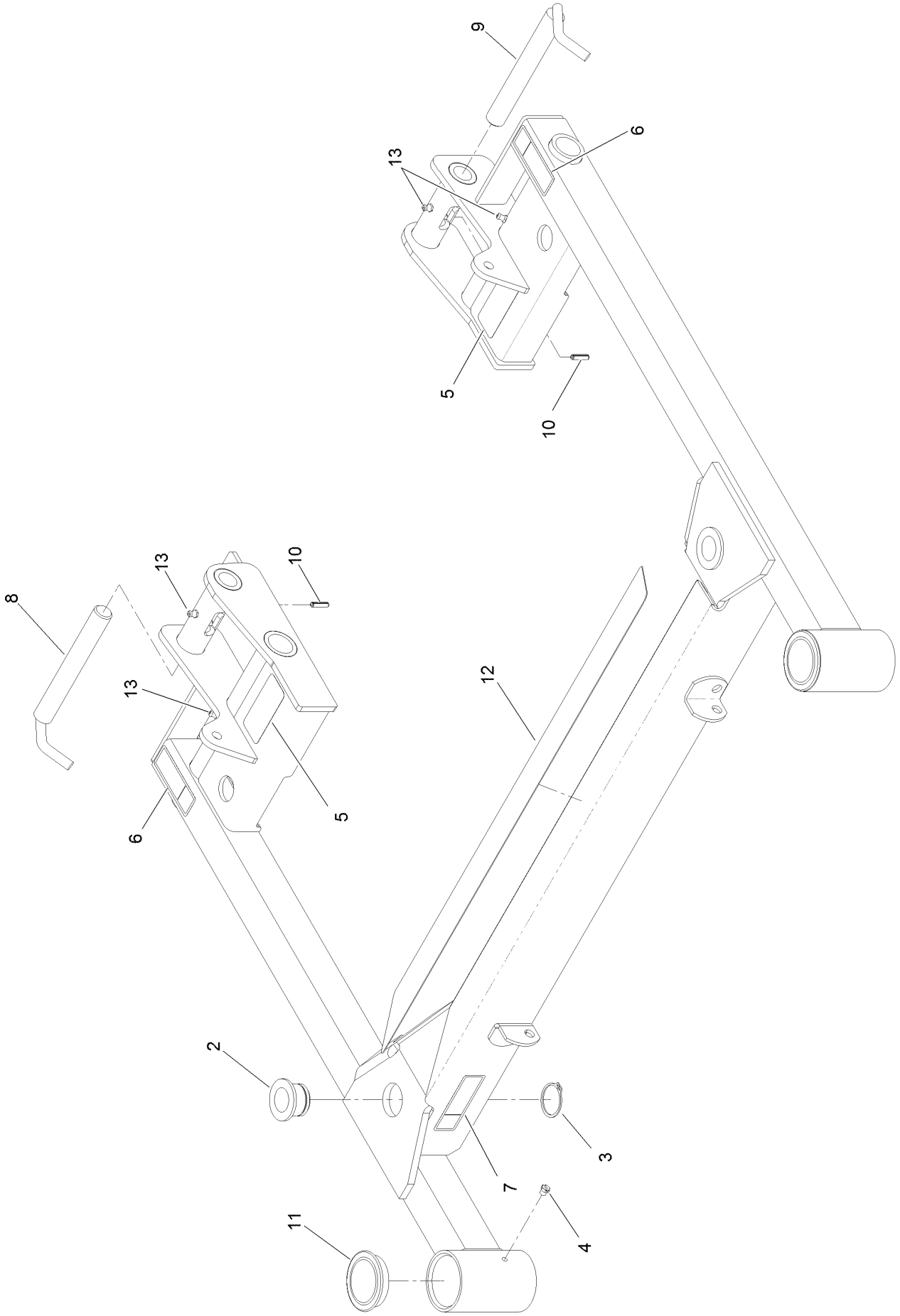

Deck Support W/Decals Assembly No. 103-9480 (continued)

Ref.	Part Number	Qty.	Description
2	103-7436	2	Bushing-Support, Deck
3	32120-33	2	Ring-Retaining
4	1-811010	2	Plug
5	93-6696	2	Decal-Warning
6	116-8935	2	Decal-Warning, Folding Deck
7	116-8936	1	Decal-Danger
8	103-4119	1	Lock-Deck, RH
9	103-4118	1	Lock-Deck, LH
10	32121-3	2	Pin-Spring
11	103-4882	2	Cap-Grease
12	103-8630	1	Pad-Anti Skid
13	302-19	4	Fitting-Grease

Spring Lift Assist Assembly No. 116-7851

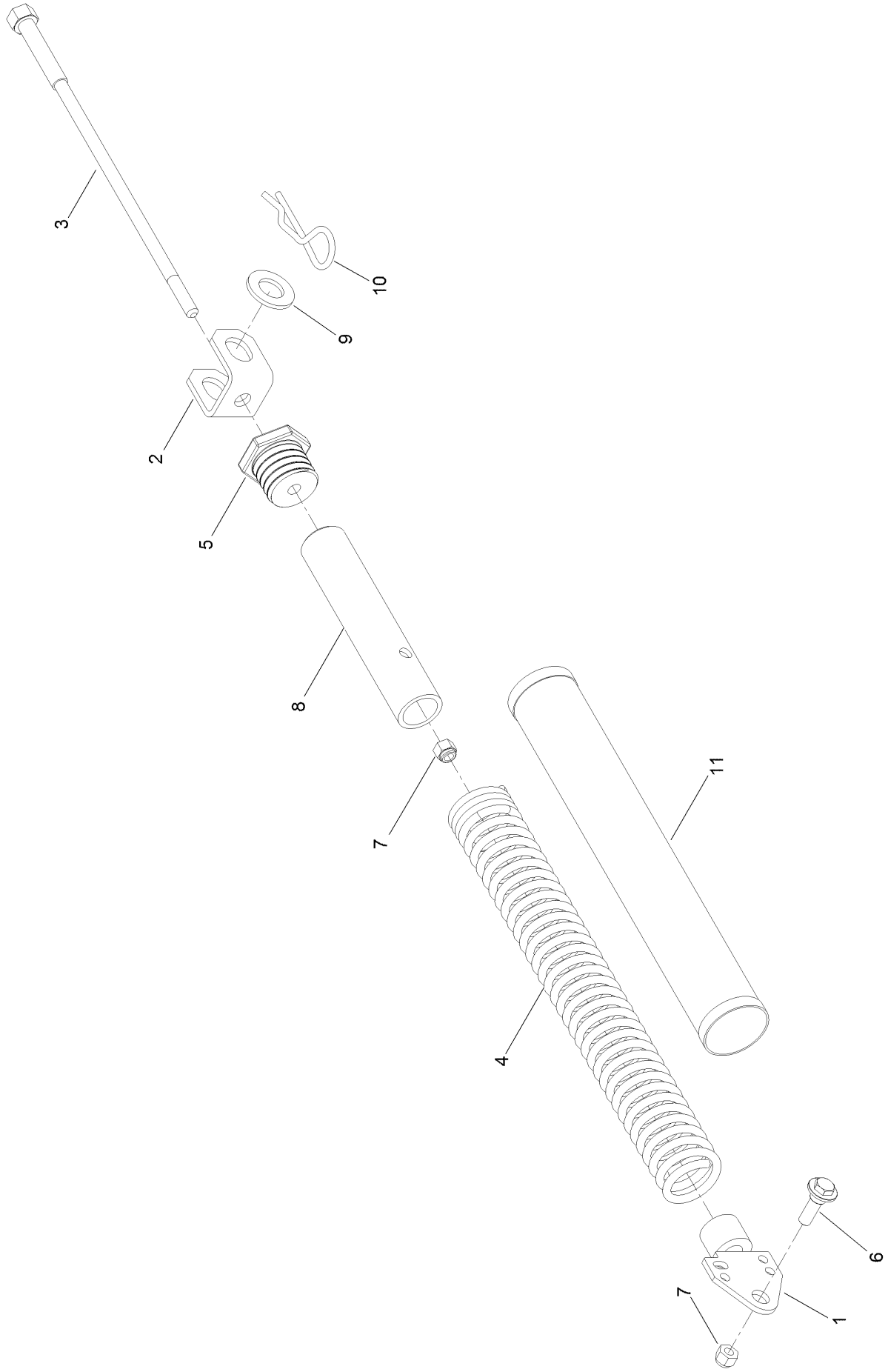

Spring Lift Assist Assembly No. 116-7851 (continued)

Ref.	Part Number	Qty.	Description
1	103-4284	1	Tensioner-Spring
2	103-4285	1	Mount-Lift Assist, Deck
3	103-3773	1	Shaft-Adjustment, Spring
4	103-4281	1	Spring-Extension
5	103-3772	1	Plug-Adjuster, Spring
6	614672	1	Screw-Shoulder, HWH
7	3296-39	2	Nut-Lock, NI
8	103-7865	1	Spring-Tube
9	3256-28	1	Washer-Flat
10	103-7353	1	Pin-Cut Height
11	103-7971	1	Cover-Spring, Deck

Attachments and Accessories

For 74311TE Z Master 8000 Series Riding Mower with 122cm Cutting Unit

Product Name	Model/Part
Hypr-Oil 500 (quart)	114-4713
Hypr-Oil 500 (gallon)	114-4714
Hypr-Oil 500-5 (5 gallon)	114-4715
ROPS Pin Kit	126-1339
ROPS Kit	130-8459
48in Mulch Kit	130-8463
25in LH Mulching Blade	130-8464
25in DH Mulching Blade	130-8465
MVP Kit	130-8468

Notes:

TORO®

Count on it.