Form No. 3425-903 Rev E

TORO®

Count on it.

Parts Catalog

Greensmaster® 1026

Mower

Model No. 04840—Serial No. 400000000 and Up

Register at www.Toro.com.
Original Instructions (EN)

CE

3425-903 E

Ordering Replacement Parts

To order replacement parts, please supply the part number, the quantity, and the description of each part desired.

Understanding Reference Numbers

Each identified part in an illustration has a reference number. The reference number for a part also appears in the parts list, along with other information about the part.

This catalog uses two special reference number formats, one to indicate parts in a service assembly and another to indicate the quantity of a given part in an illustration.

Service Assembly Reference Numbers

Parts in service assemblies have reference numbers in the form a:b. The a represents the reference number of the entire service assembly and the b represents a sequential number unique to each part within the service assembly.

For example, a wheel assembly might be identified by reference number 6, the tire by 6:1, the valve by 6:2, and the wheel by 6:3. When you order the assembly identified by reference number 6, you receive all parts identified by reference numbers 6:1,6:2, and 6:3. However, you may also order any part individually. Reference numbers of this type appear in illustration and in parts lists.

Reference Numbers Indicating Quantity

In an illustration, if a reference number indicates more than one part, the reference number has the form nX y. The n represents the quantity of the part, the X is the multiplication symbol, and the y represents the reference number.

For example, in an illustration, the reference number 2X 37 means that two of the parts identified by reference number 37 are indicated.

Contents

Frame and Handle Mount Assembly 4
Drum Drive Assembly 5
Drum Drive Gearbox Assembly No. 132-4566 6
Transmission Assembly 7
Transmission Gearbox Assembly No. 130-6820 Transmission Case Assembly 8
Transmission Gearbox Assembly No. 130-6820 Reel Drive Assembly 9
Transmission Gearbox Assembly No. 130-6820 Traction Drive Assembly 10
Differential Assembly No. 132-4555 11
Engine Assembly 12
Engine Assembly No. 138-2142 13
Reel Controls and Covers Assembly 14
Upper Handle Assembly 15
Traction Bail Assembly 16
CE Decal 17
Attachments and Accessories 18

© 2020—The Toro® Company
8111 Lyndale Avenue South
Bloomington, MN 55420

Contact us at www.Toro.com.
Printed in the USA.
All Rights Reserved

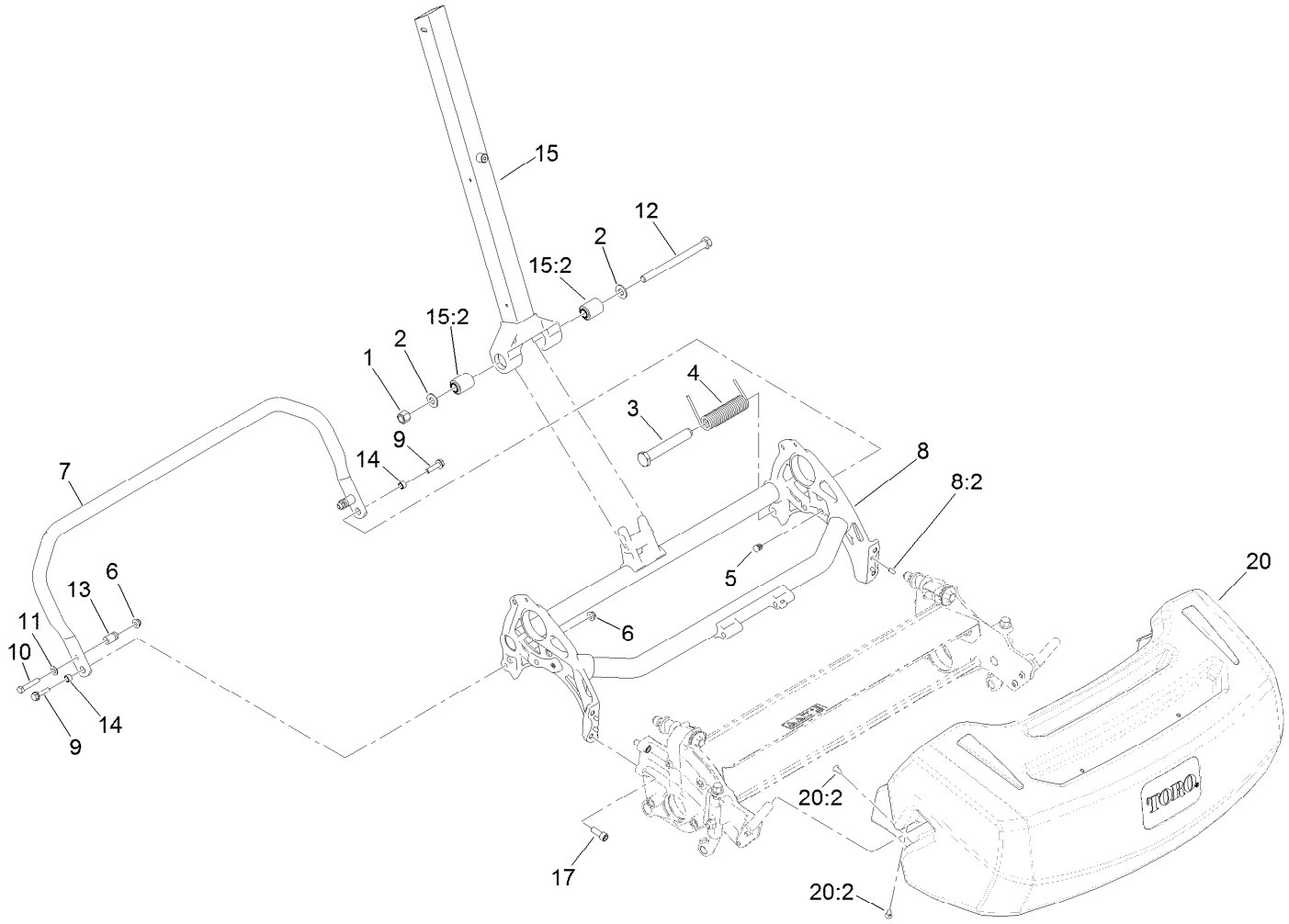

Frame and Handle Mount Assembly

Ref.	Part Number	Qty.	Description
1	3296-23	1	Nut-Lock, NI
2	3256-26	2	Washer-Flat
3	138-1510	1	Pin-Mount, Spring
4	138-1459	1	Spring-Torsion, LH
5	139-4326	2	Plug-Plastic
6	119-4041	3	Nut-HF
7	138-1577-03	1	Kickstand-26 Inch
8	138-1648	1	26 Inch Frame ASM
8:2	95-0715	4	Pin-Dowel
9	112-6913	2	Screw-HHF

Ref.	Part Number	Qty.	Description
10	322-9	2	Screw-HH
11	3256-23	2	Washer-Plain
12	325-33	1	Screw-HH
13	65-7900	2	Retainer-Spring
14	65-7910	2	Spacer
15	137-0292	1	Lower Handle ASM
15:2	138-1469	2	Bushing-Straight
17	3274-7	4	Screw-HSH
20	140-9294	1	Basket-Grass
20:2	121-4729	4	Plug

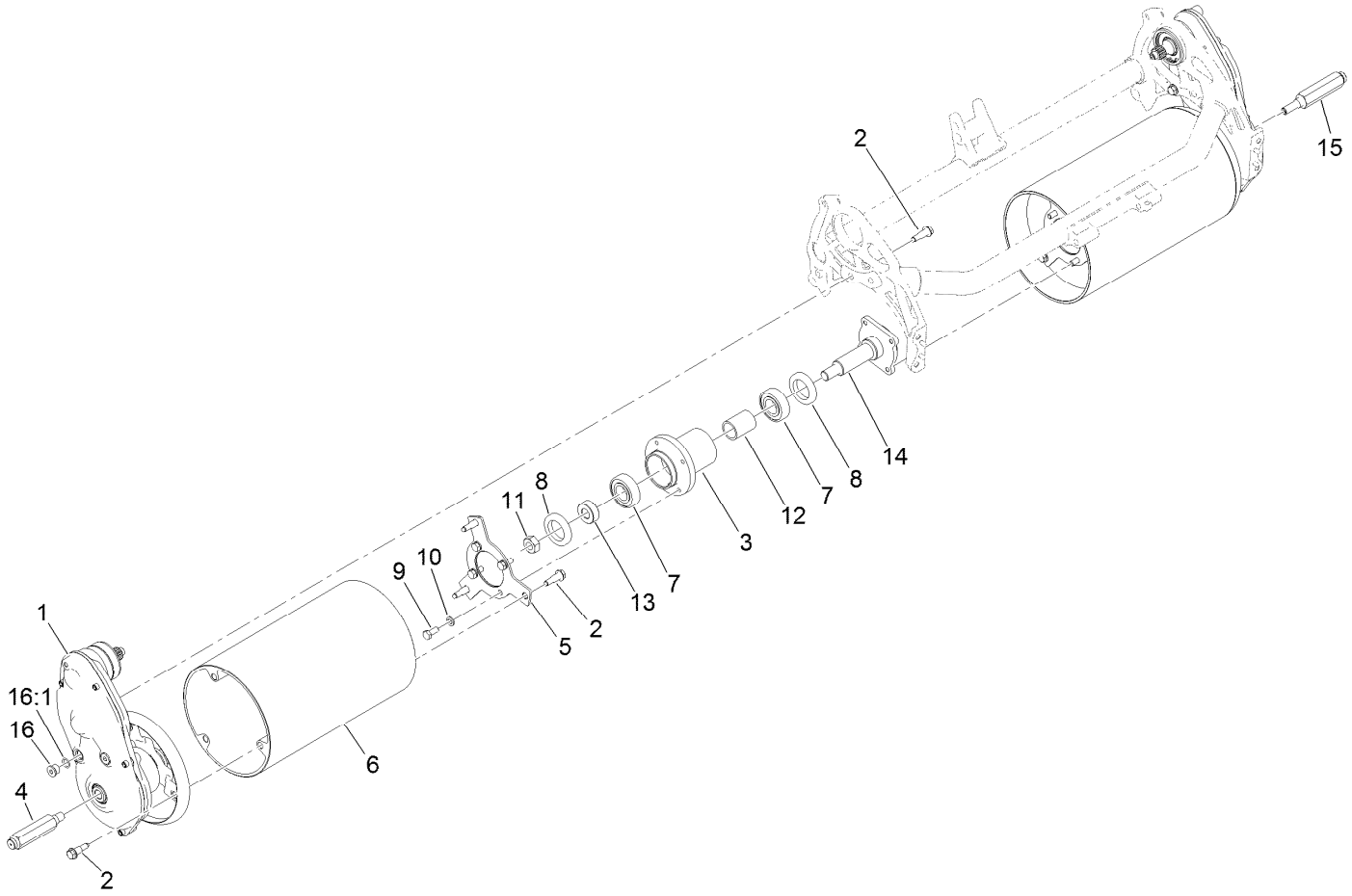

Drum Drive Assembly

Ref.	Part Number	Qty.	Description
1	132-4566	2	Drum Drive Gear Box ASM
2	132-4607	14	Bolt-Shoulder, Flange
3	132-6971	1	Hub-Drum
4	132-4605	1	Shaft-Hex, RH
5	133-9240-0P	2	Plate-Drum, Hub
6	138-1529	2	Drum-Traction, 26 Inch
7	251-82	2	Bearing-Ball
8	253-159	2	Seal
9	322-3	8	Screw-HH
10	3253-4	8	Washer-Lock
11	3296-33	1	Nut-Lock, NI
12	65-6520	1	Spacer
13	65-6530	1	Spacer
14	94-5850	1	Spindle-Drum
15	132-4606	1	Shaft-Hex, LH
16	353-989	4	Plug-Hex, Hollow
16:1	237-42	1	O-Ring

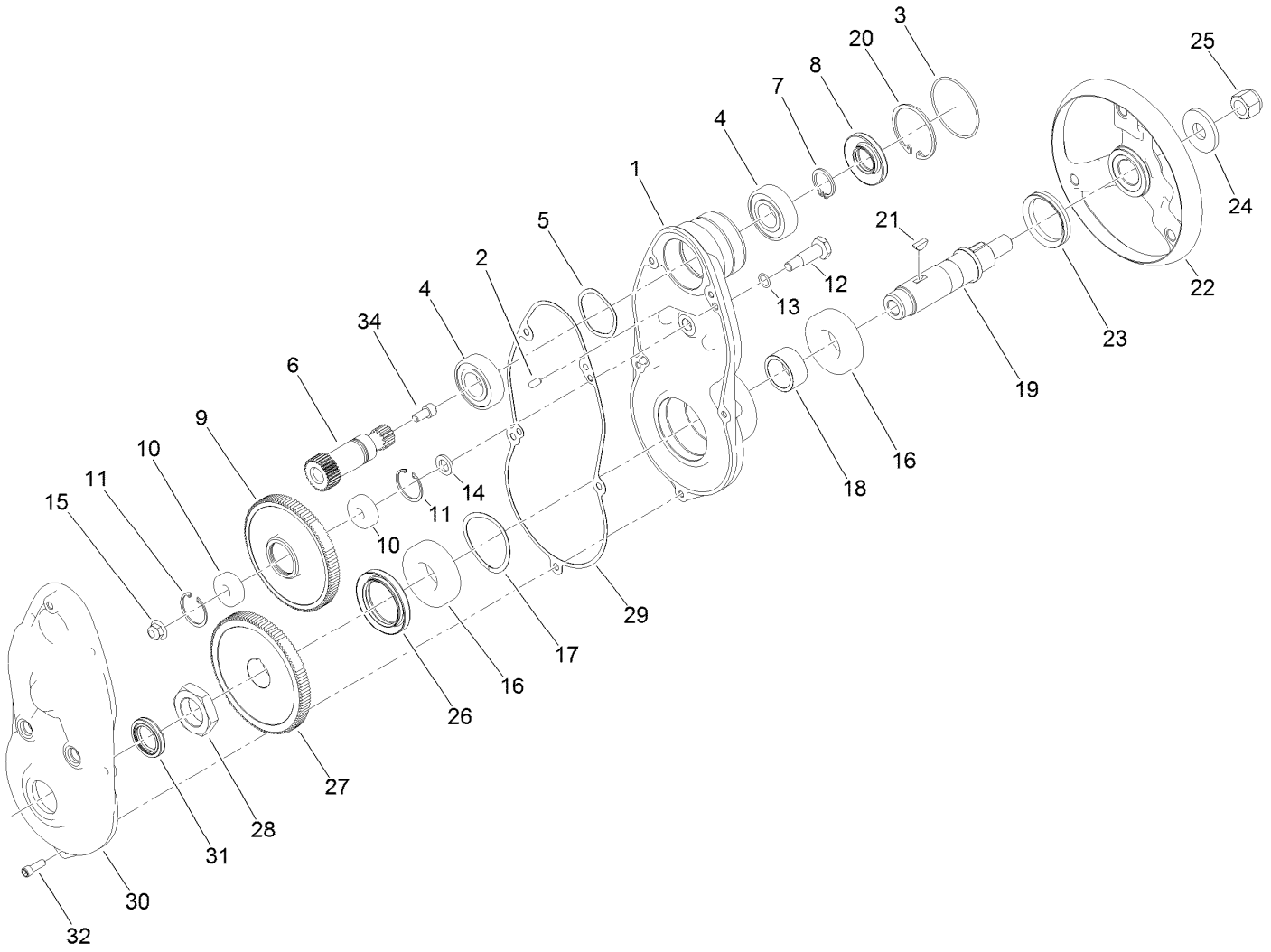

Drum Drive Gearbox Assembly No. 132-4566

Ref.	*Part Number*	*Qty.*	*Description*
1	137-0282	1	Housing-Drive, Drum
2	133-4591	2	Pin-Dowel
3	133-9082	1	O-Ring
4	251-82	2	Bearing-Ball
5	3290-485	1	Washer-Wave
6	132-4565	1	Gear-Spur, 30T
7	138-1507	1	Ring-Retaining, EXT (25Mm)
8	138-1491	1	Seal-Oil
9	137-0274	1	Gear-Spur, 108T
10	49-2410	2	Bearing-Ball
11	138-1506	2	Ring-Retaining, Int (32Mm)
12	133-4558	1	Pin-Bearing, Short
13	80-8460	1	O-Ring
14	133-4553	1	Spacer-Bearing
15	119-4042	1	Nut-HF, NI
16	251-312	2	Bearing-Ball

Ref.	*Part Number*	*Qty.*	*Description*
17	115-5258	1	Spring-Wire, Flat
18	132-4568	1	Spacer
19	133-4562	1	Shaft-Drum, Drive
20	138-1480	1	Ring-Retaining, Int (52Mm)
21	138-1504	2	Key-Woodruff, 5Mm
22	133-9244	1	Hub-Drum, Outer
23	253-161	1	Seal-V-Ring
24	104-9216	1	Washer-Hardened
25	126-3841	1	Nut-Hex, NI
26	138-1490	1	Seal-Oil
27	137-0275	1	Gear-Spur, 114T
28	133-9078	1	Nut-Hex
29	132-4569	1	Gasket-Drive, Drum
30	137-0284	1	Cover-Drive, Drum
31	133-4559	1	Seal-Oil
32	3274-8	5	Screw-HSH
34	3274-12	1	Screw-HSH

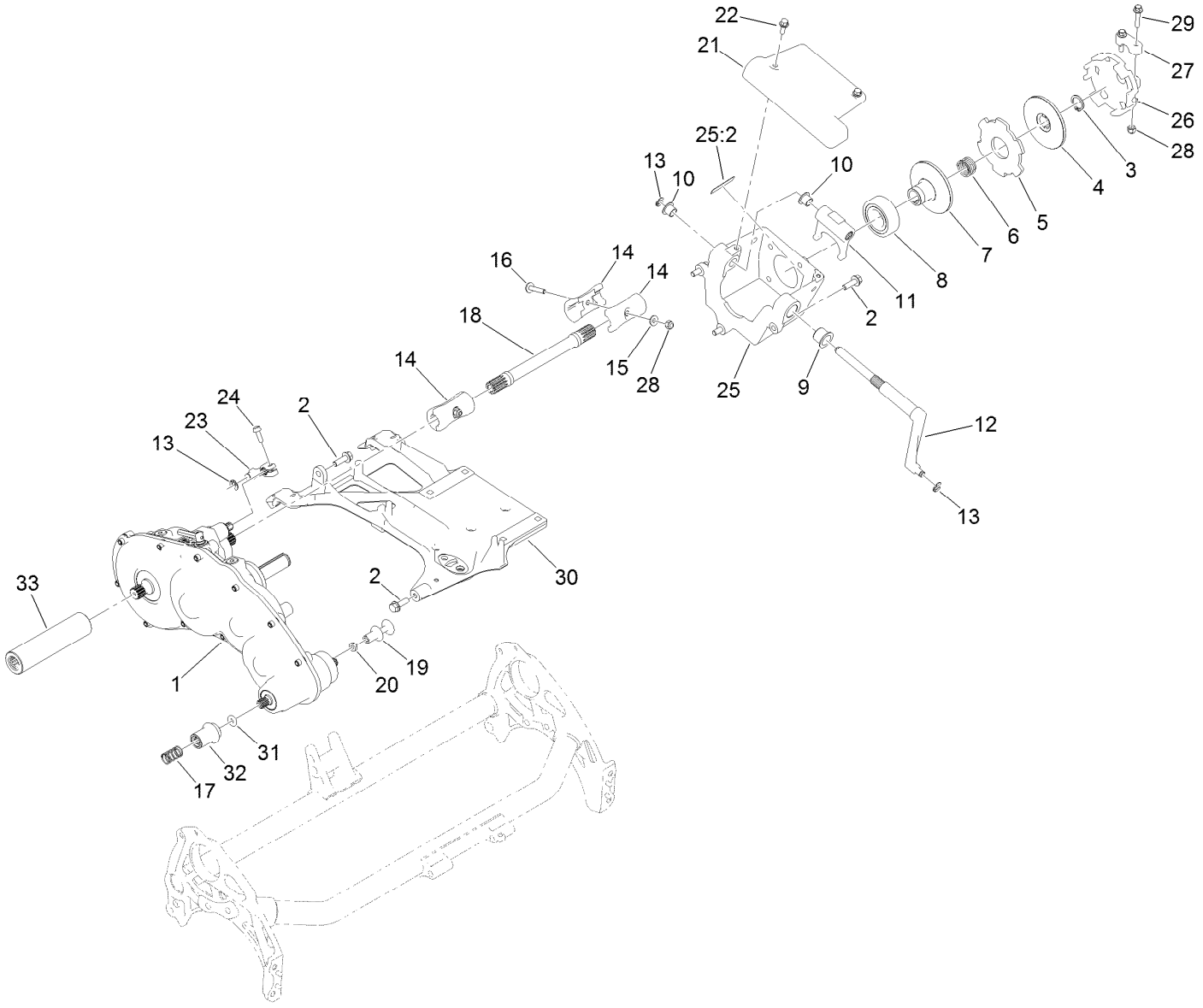

Transmission Assembly

Ref.	Part Number	Qty.	Description
1	130-6820	1	Transmission Gear Box ASM
2	115-5142	5	Screw-HHF
3	32151-33	1	Ring-Retaining, EXT
4	133-9095	1	Disc-Clutch
5	133-9094	1	Plate-Friction
6	133-9123	1	Spring-Compression, Clutch
7	138-1508	1	Disc-Clutch, Slider
8	138-1505	1	Bearing-Sealed, Self Aligning
9	132-4089	1	Bushing
10	125-5239	2	Bushing-Flange
11	138-3548	1	Fork-Clutch
12	138-3549	1	Shaft-Fork
13	32151-47	3	Ring-Retaining
14	133-9100	4	Coupler-Splined, 4 Tooth
15	119-8952	2	Washer
16	126-8232	2	Screw-Truss
17	133-9128	1	Spring-Compression, Coupler
18	139-4328	1	Shaft-Drive, 26 Inch
19	133-9207	1	Adapter-Slider
20	120-9638	1	Nut-Jam
21	138-5545	1	Cover-Clutch
22	120-9678	2	Screw-HHF
23	133-9117	1	Lever-Brake, Cable
24	131-6150	1	Screw-HWHTF
25	139-4301	1	Bell Housing ASM
25:2	120-9570	1	Decal-Warning
26	138-3542	1	Hub-Clutch, External
27	138-5522	1	Clamp-Hub, Clutch
28	3296-42	4	Nut-Lock, NI
29	127-8639	2	Screw-HHF
30	138-5517	1	Base-Engine
31	139-4357	1	O-Ring
32	132-4619	1	Tube-Drive, Reel
33	138-1616	1	Tube-Drive

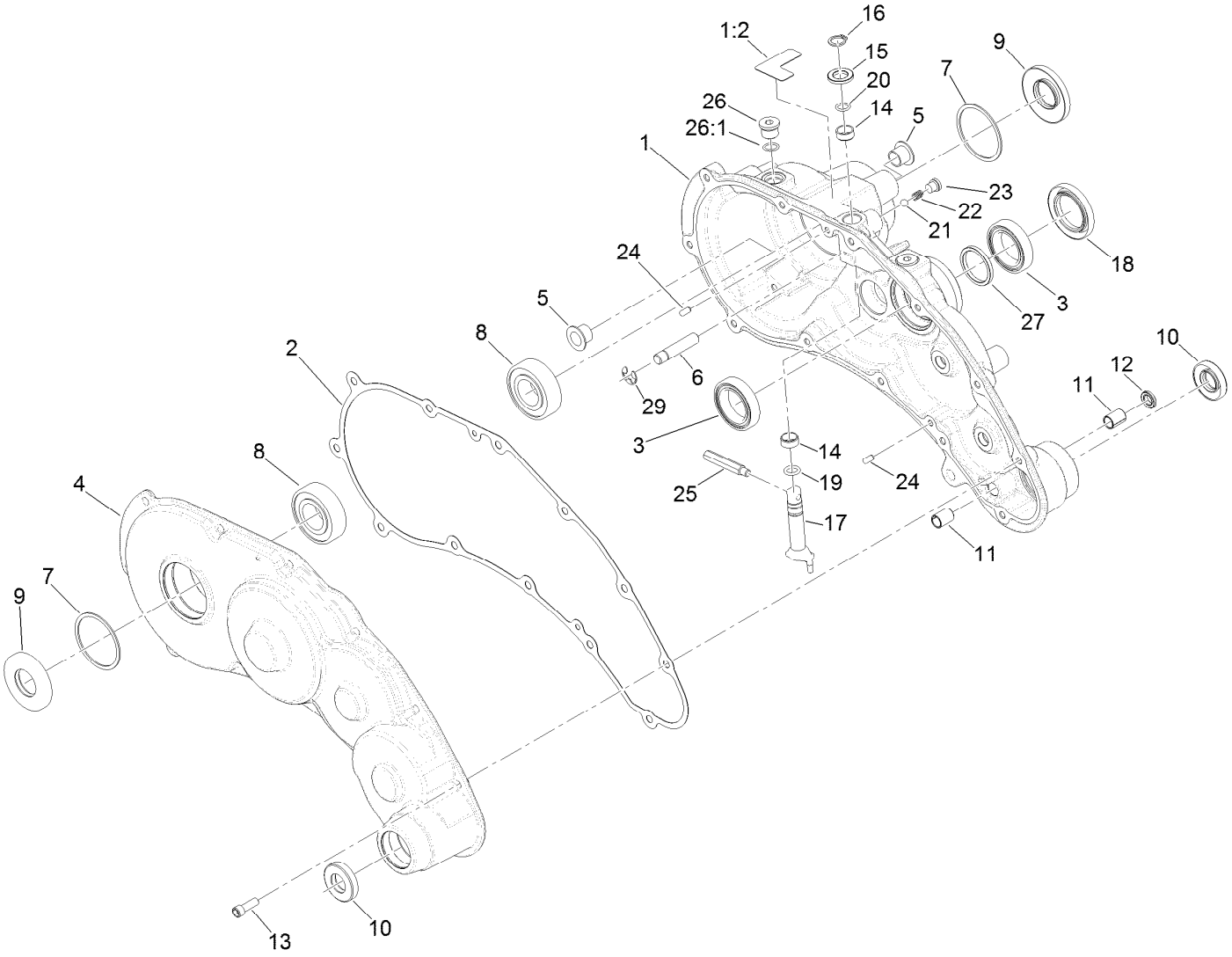

Transmission Gearbox Assembly No. 130-6820
Transmission Case Assembly

Ref.	Part Number	Qty.	Description
1	139-4306	1	Transmission Housing ASM
1:2	138-1644	1	Decal-Release, Traction
2	132-4551	1	Gasket-Transmission
3	121-9281	2	Bearing-Ball
4	138-1603	1	Transmission Cover ASM
5	125-5239	2	Bushing-Flange
6	133-9122	1	Pin-Mount, Brake
7	32151-92	2	Ring-Retaining
8	251-82	2	Bearing-Ball
9	133-9075	2	Seal-Oil
10	130-9463	2	Seal-Oil
11	131-3038	2	Bushing-Sleeve
12	131-3126	1	Seal-Oil
13	3274-8	12	Screw-HSH
14	121-4738	2	Bushing-Straight

Ref.	Part Number	Qty.	Description
15	108-5059	1	Spacer-Bushing
16	32151-61	1	Ring-Retaining
17	130-6816	1	Shaft-Selector, Traction
18	116-5647	1	Seal-Grease
19	131-1879	1	O-Ring Seal
20	237-22	1	O-Ring
21	105-2442	1	Ball-Detent
22	105-2443	1	Spring-Detent
23	131-1825	1	Plug-ORB
24	121-9249	2	Pin-Dowel
25	133-9149	1	Pin-Groomer
26	353-989	2	Plug-Hex, Hollow
26:1	237-42	1	O-Ring
27	138-1496	1	Spacer
29	105-7004	1	E-Ring

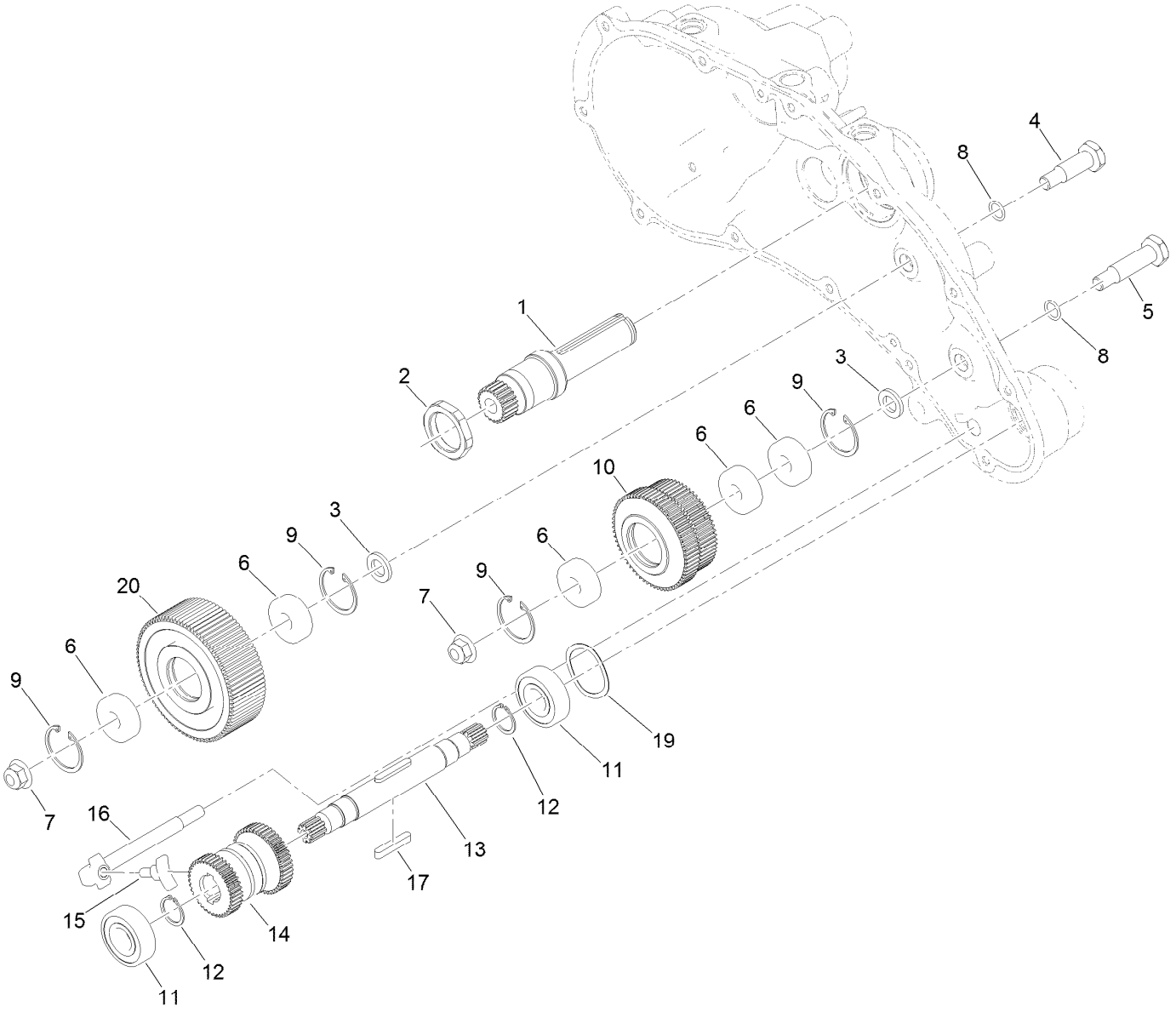

Transmission Gearbox Assembly No. 130-6820
Reel Drive Assembly

Ref.	*Part Number*	*Qty.*	*Description*
1	138-1509	1	Shaft-Input, 22T
2	138-1495	1	Nut-Lock, Thin
3	133-4553	2	Spacer-Bearing
4	133-4558	1	Pin-Bearing, Short
5	133-4557	1	Pin-Bearing, Long
6	49-2410	5	Bearing-Ball
7	104-8301	2	Nut-HF, NI
8	80-8460	2	O-Ring
9	138-1506	4	Ring-Retaining, Int (32Mm)
10	137-0272	1	Gear-Spur, 60T/65T

Ref.	*Part Number*	*Qty.*	*Description*
11	38-7820	2	Bearing-Ball
12	138-1629	2	Ring-Retaining, EXT (17Mm)
13	130-6825	1	Shaft-Drive, Reel
14	130-6834	1	Gear-Spur, Slider
15	133-9120	1	Shoe-Clutch, Reel
16	133-9121	1	Actuator-Clutch, Reel
17	103-2739	2	Key
19	131-3170	1	Spring-Wave
20	137-0273	1	Gear-Spur, 85T

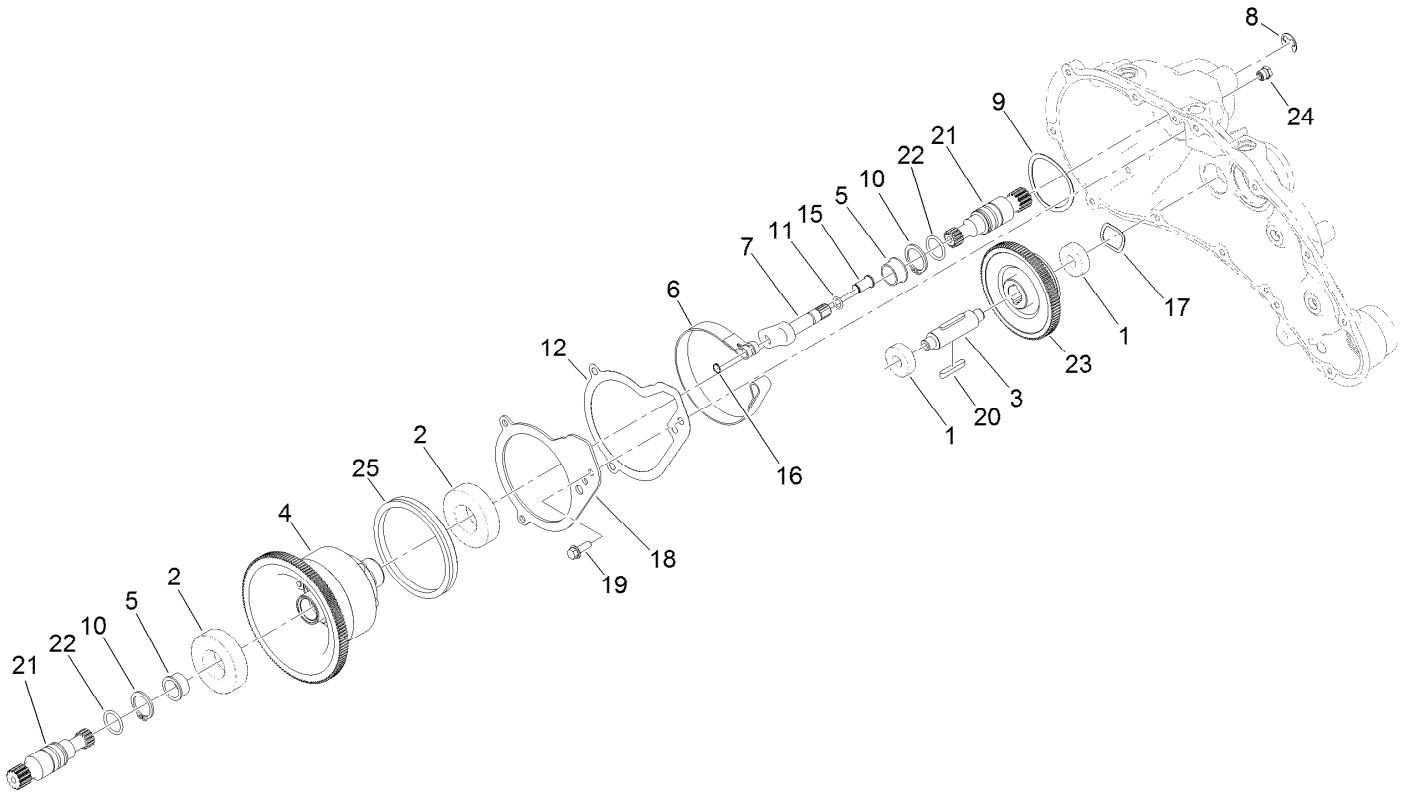

Transmission Gearbox Assembly No. 130-6820
Traction Drive Assembly

Ref.	*Part Number*	*Qty.*	*Description*
1	49-2410	2	Bearing-Ball
2	251-312	2	Bearing-Ball
3	137-0236	1	Shaft-Slider, Neutral
4	132-4555	1	Differential ASM
5	256-252	2	Bearing-Flange
6	130-6824	1	Band-Brake
7	132-4550	1	Lever-Brake
8	32120-47	1	Ring-Retaining, External
9	115-5258	1	Spring-Wire, Flat
10	32151-36	2	Ring-Retaining
11	237-22	1	O-Ring
12	138-1631	1	Gasket-Plate, Brake

Ref.	*Part Number*	*Qty.*	*Description*
15	120-9687	1	Pin-Clevis, Brake
16	32120-46	1	Ring-Retaining
17	112-5163	1	Washer-Wave
18	137-0238	1	Plate-Retainer
19	119-1138	4	Screw-HWH
20	103-2739	2	Key
21	130-6841	2	Shaft-Differential
22	237-159	2	O-Ring
23	137-0276	1	Gear-Spur, Neutral (93T)
24	133-4589	1	Fitting-Plug
25	138-1472	1	V-Ring, Seal

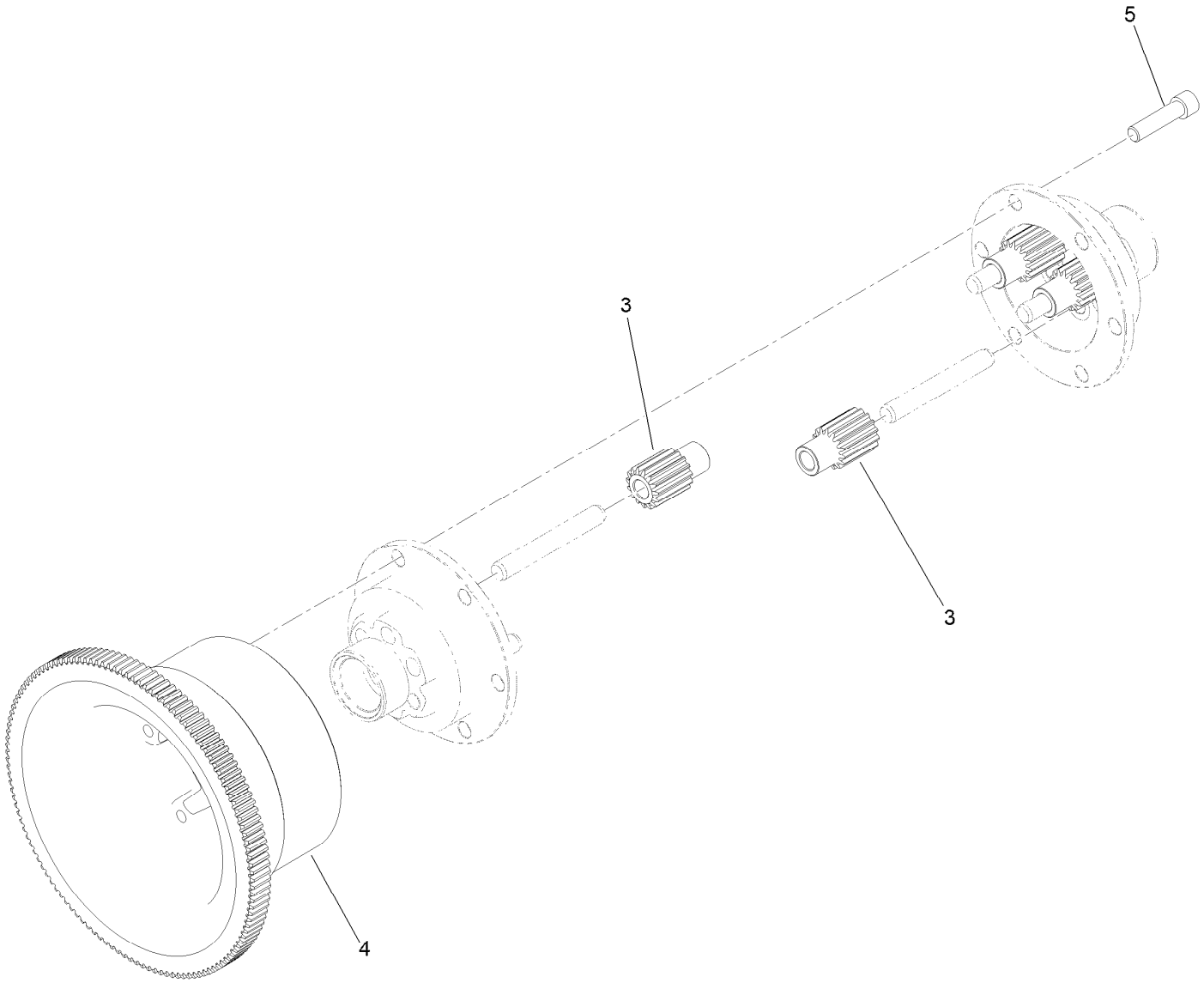

Differential Assembly No. 132-4555

Ref.	*Part Number*	*Qty.*	*Description*
3	130-6840	6	Gear-Spur, Differential
4	137-0294	1	Gear-Differential, 127T
5	3274-26	6	Screw-HSH

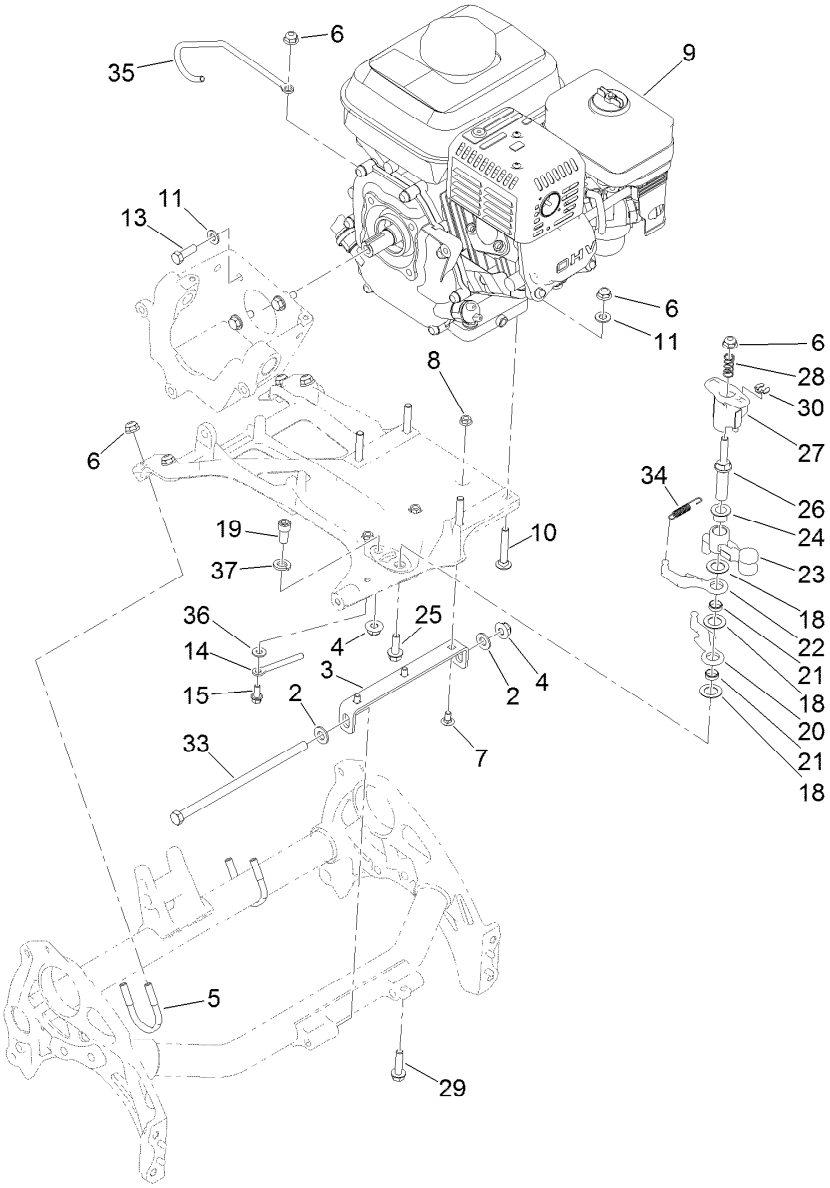

Engine Assembly

Ref.	Part Number	Qty.	Description
2	3256-24	2	Washer-Flat
3	138-1623-01	1	Bracket-Mount, Engine
4	119-4042	2	Nut-HF, NI
5	137-0301	2	Clamp-Tube
6	119-4041	9	Nut-HF
7	116-5611	3	Bolt-CARR
8	32128-10	3	Nut-Lock, HHF
9	138-2142	1	Engine ASM ●
10	3230-6	4	Bolt-CARR
11	3256-23	8	Washer-Plain
13	131-5919	4	Screw-HH, Patch
14	138-1591	1	Guide-Cable
15	3234-33	1	Screw-HHF
18	139-7362	3	Washer-Poly
19	131-8573	1	Screw-HSH
20	138-1523	1	Reel Lever

Ref.	Part Number	Qty.	Description
21	133-9226	2	Bushing-Straight
22	138-1524	1	Lever-Reel
23	133-9206	1	Bellcrank-Reel
24	125-5239	1	Bushing-Flange
25	115-5142	1	Screw-HHF
26	137-0298	1	Shaft-Selector, Reel
27	137-0299	1	Hub-Selector, Reel
28	117-1031	1	Spring-Compression
29	112-6913	1	Screw-HHF
30	32151-47	1	Ring-Retaining
33	323-30	1	Screw-HH
34	119-4609	1	Spring-Extension
35	139-4309	1	Guide-Cable
36	3256-22	1	Washer-Flat
37	3253-21	1	Washer-Lock

● Obtain parts from www.honda-engines.com

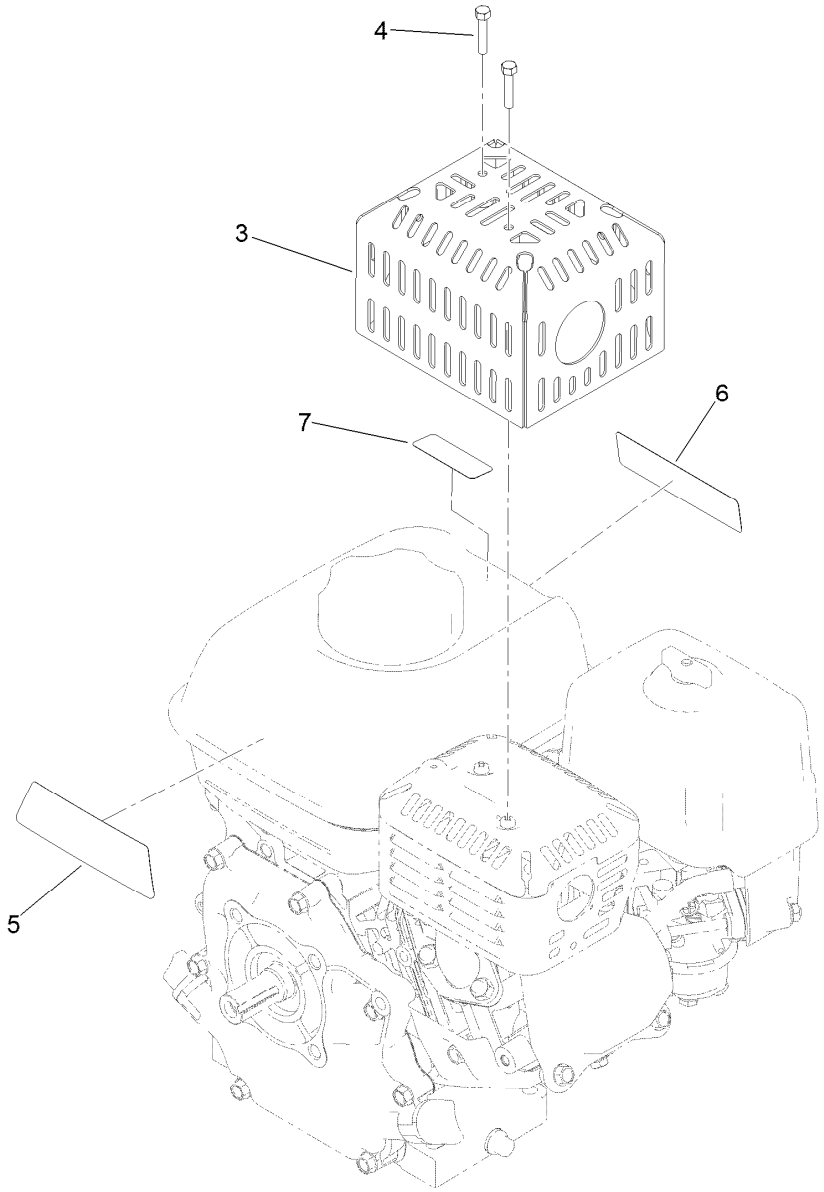

Engine Assembly No. 138-2142

Ref.	*Part Number*	*Qty.*	*Description*
3	138-2128-03	1	Guard-Muffler
4	87-5150	2	Screw-HH
5	138-2138	1	Decal-Warning, Engine
6	133-8062	1	Decal-Arrestor, Spark
7	130-8322	1	Decal-Warning, Ethanol

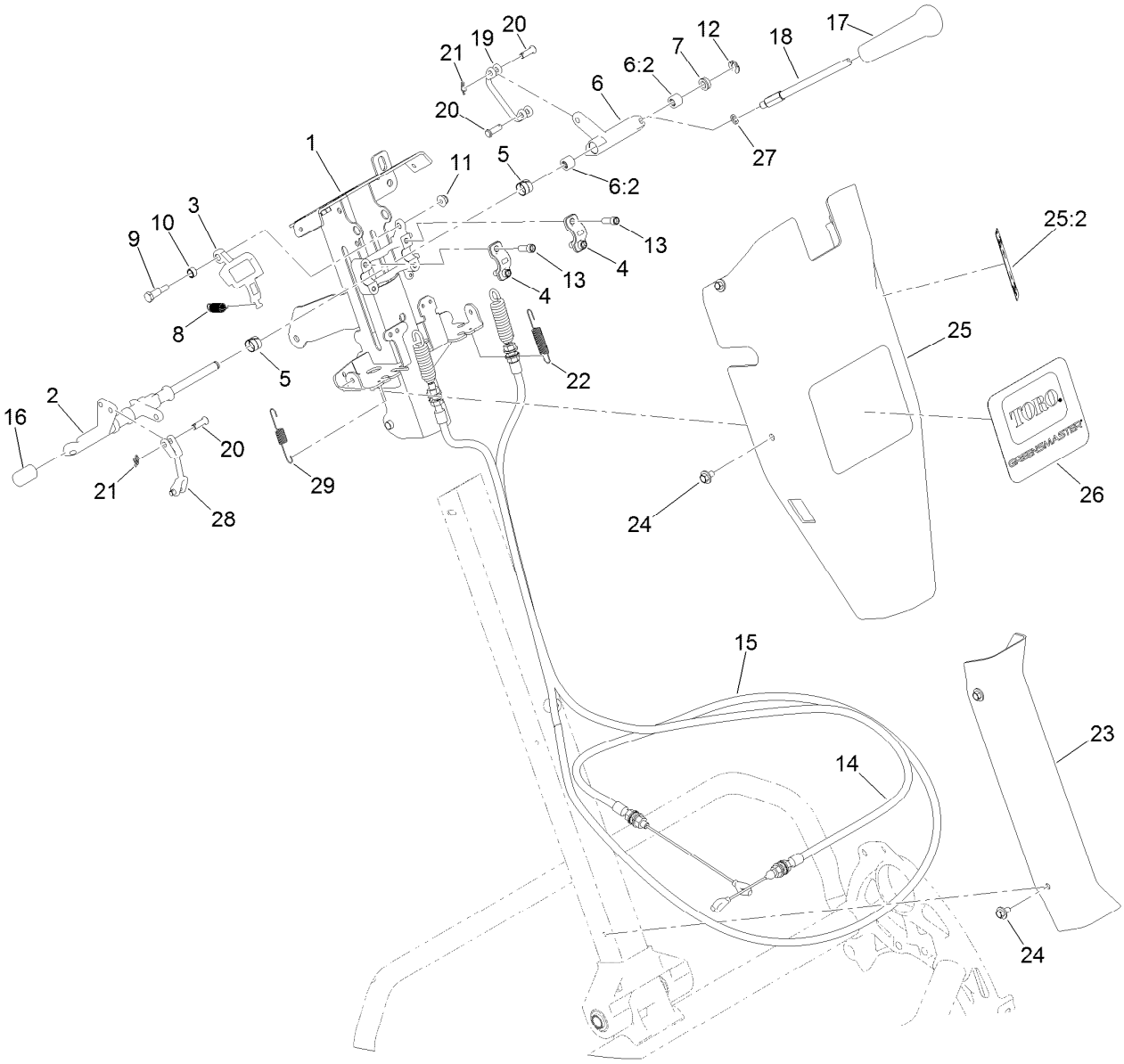

Reel Controls and Covers Assembly

Ref.	Part Number	Qty.	Description
1	139-5191-0P	1	Receiver-Upper
2	137-0264	1	Shaft-Main, Controls
3	137-0266	1	Cam-Latch, Upper
4	138-1513	2	Clamp-Shaft, Control
5	137-0263	2	Bushing-Split
6	137-0312	1	Reel Lever ASM
6:2	138-1637	2	Bearing-Needle
7	131-3187	1	Seal-V-Ring
8	140-3410	1	Spring-Extension
9	137-0313	1	Screw-Shoulder
10	137-0346	1	Spacer-Latch, Bail
11	104-7201	1	Nut-HF
12	32151-47	1	Ring-Retaining
13	3274-8	4	Screw-HSH
14	137-0180	1	Cable-Clutch
15	137-0181	1	Cable-Traction

Ref.	Part Number	Qty.	Description
16	138-1641	1	Stockcap
17	104-9760	1	Knob-Black
18	137-0190	1	Rod-Handle, Reel Lever
19	137-0232	1	Connector-Clevis
20	1-808265	4	Pin-Clevis
21	138-1587	2	Clip-Pin, Cotter
22	138-1536	1	Spring-Extension
23	138-1479	1	Cover-Handle, Lower
24	46-6810	8	Screw And Washer ASM
25	139-4304	1	Control Upper Cover ASM
25:2	138-1589	1	Decal-Reel Drive Engagement
26	138-1581	1	Decal-Greensmaster 1026
27	75-5470	1	Spacer-Bearing
28	138-1592	1	Connector-Clevis
29	140-3417	1	Spring-Extension

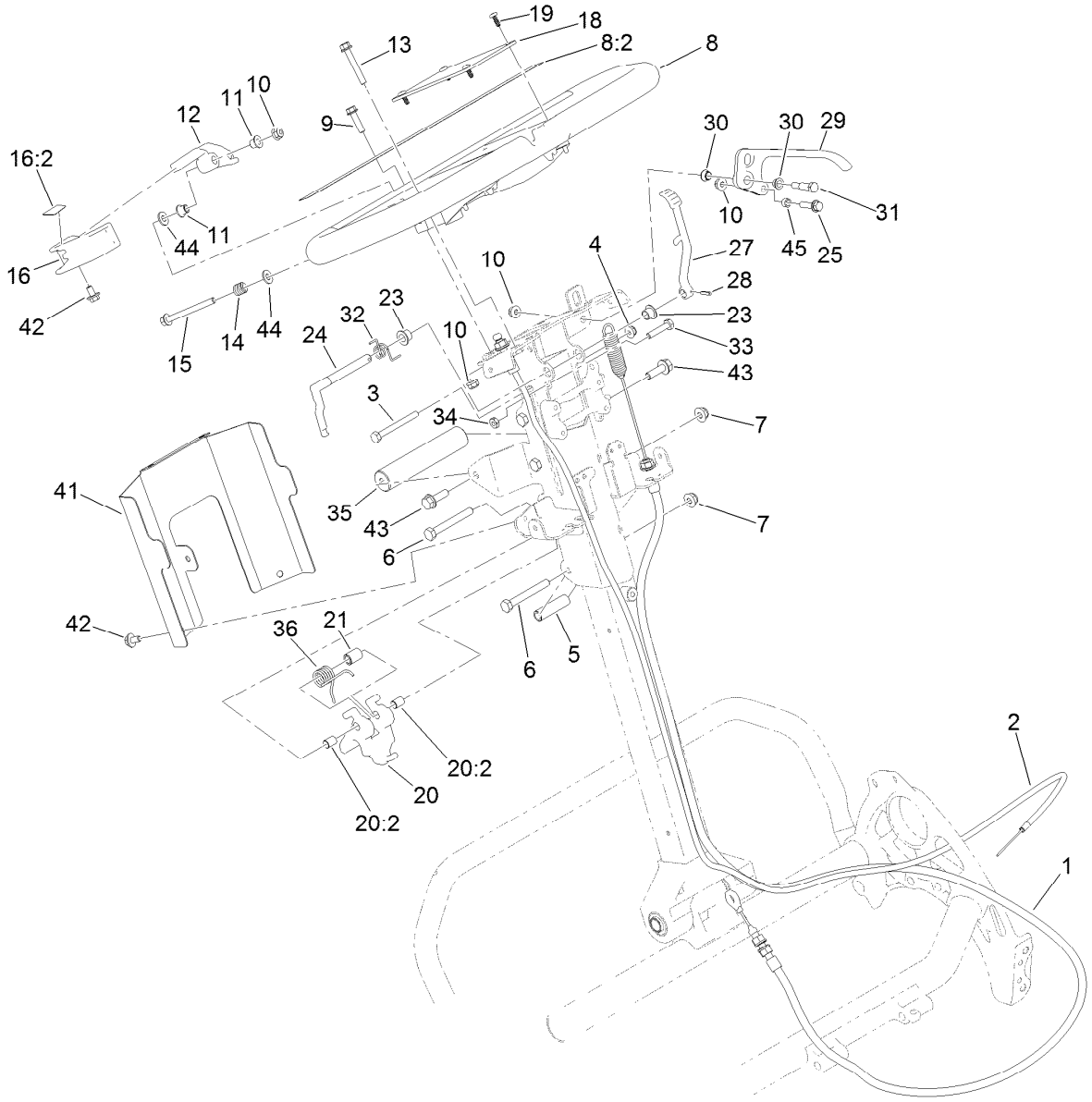

Upper Handle Assembly

Ref.	Part Number	Qty.	Description
1	137-0183	1	Cable-Brake
2	137-0182	1	Cable-Throttle
3	321-15	1	Screw-HH
4	104-7201	1	Nut-HF
5	137-0243	3	Spacer
6	322-12	4	Screw-HH
7	119-4041	4	Nut-HF
8	138-1645	1	Handle ASM
8:2	138-5532	1	Decal-Warning, General
9	120-4654	2	Screw-HHF
10	119-4040	5	Nut-Flange, NI
11	138-3538	2	Bushing-Flange
12	138-1636	1	Arm-Throttle
13	138-5527	1	Screw-HHF
14	3-5787	1	Spring-Compression
15	114-8410	1	Screw-HHF
16	139-4303	1	Throttle Lever ASM
16:2	138-5534	1	Decal-Throttle
18	138-5514	1	Plate-Notepad, Handle
19	127-6843	4	Screw-Plastite, Torx Pan
20	137-0317	1	Handle Adjuster ASM

Ref.	Part Number	Qty.	Description
20:2	137-0308	2	Bushing-Igus
21	137-0318	1	Spacer-Spring
23	138-1514	2	Bushing-Flange
24	138-1573	1	Latch-Brake
25	119-1066	1	Screw-HF
27	138-1574	1	Lever-Lock, Brake
28	32121-73	1	Pin-Roll
29	138-5505	1	Lever
30	138-5538	2	Bushing-Flange
31	138-1559	1	Screw-Shoulder
32	138-1518	1	Spring-Brake, Torsion
33	114-0282	1	Screw-HH
34	120-9695	1	Nut-Jam
35	138-1535	1	Handle-Assist, Lift
36	138-1481	1	Spring-Handle, Torsion
41	138-5530-03	1	Cover-Bottom, Controls
42	46-6810	3	Screw And Washer ASM
43	115-5142	2	Screw-HHF
44	3256-22	2	Washer-Flat
45	120-6564	1	Spacer

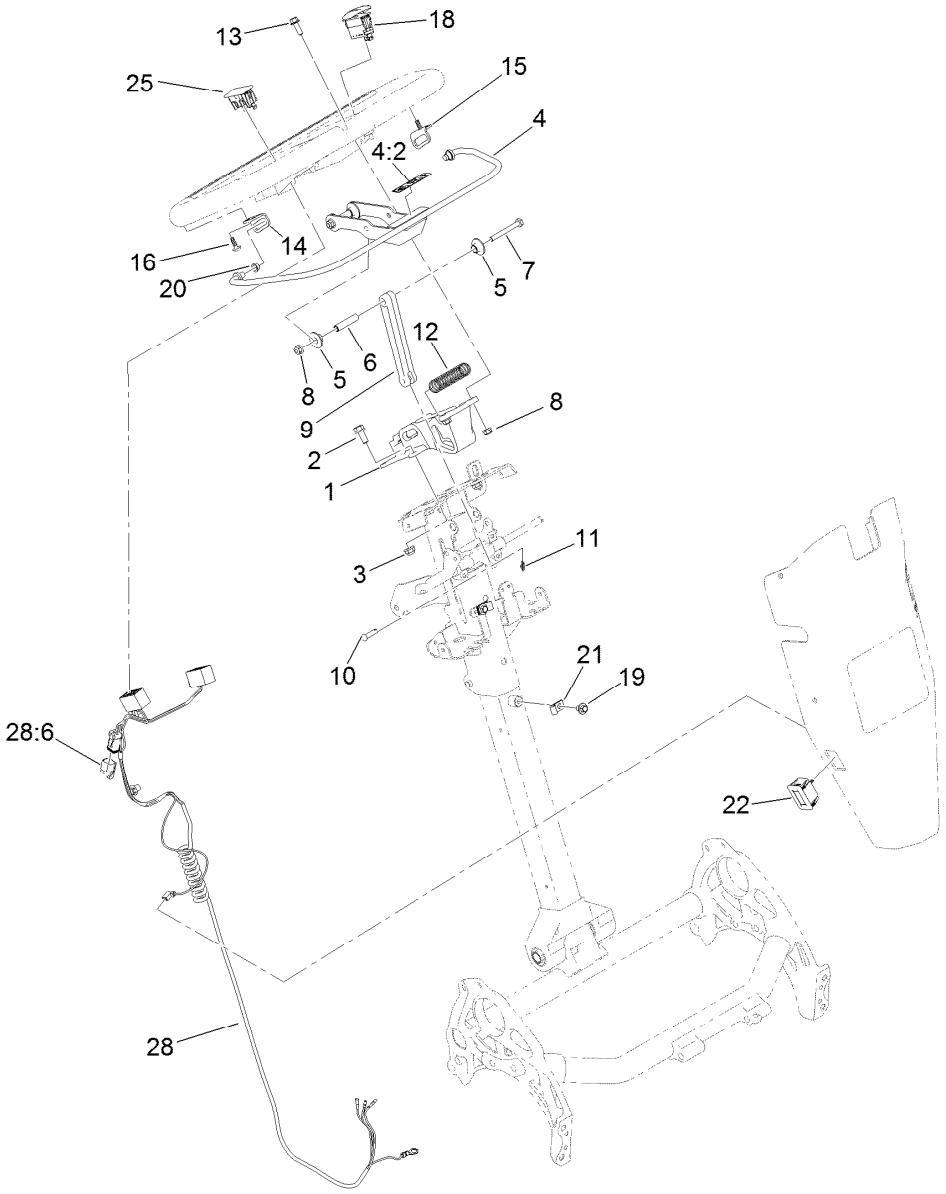

Traction Bail Assembly

Ref.	Part Number	Qty.	Description
1	138-5524	1	Mount-Handle
2	3234-47	2	Screw-HHF
3	119-4041	2	Nut-HF
4	139-4302	1	Clutch Bail ASM
4:2	138-5533	1	Decal-Bail, Traction
5	138-3466	4	Bushing-Flange
6	138-3465	2	Spacer-Tube
7	321-18	2	Screw-HH
8	119-4040	4	Nut-Flange, NI
9	138-5515	1	Link-Bail, Clutch
10	353-322	1	Pin-Clevis
11	138-1587	1	Clip-Pin, Cotter
12	138-3468	1	Spring-Compression

Ref.	Part Number	Qty.	Description
13	120-9678	2	Screw-HHF
14	138-3539	1	Bracket-Bail, RH
15	138-3540	1	Bracket-Bail, LH
16	138-5775	2	Screw-Delta Point
18	122-1497	1	Switch-Rocker, On-None-Off
19	46-6810	2	Screw And Washer ASM
20	138-5538	2	Bushing-Flange
21	2412-72	2	Clip-Closed, Insulated
22	119-1347	1	Meter-Hour
25	119-7791	1	Plug-Hole, Carling
28	122-1416	1	Harness-Wire
28:6	32180-091	1	Cap-Dust, 2 Way

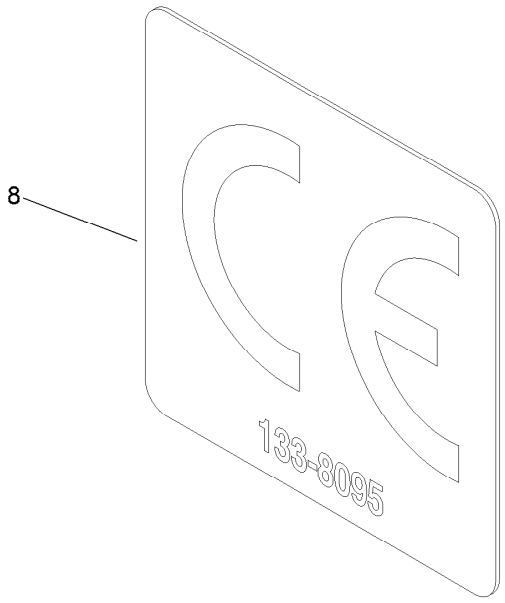

CE Decal

Ref.	*Part Number*	*Qty.*	*Description*
8	133-8095	1	Decal-CE

Attachments and Accessories

For 04840 Greensmaster 1026 Mower

Product Name	Model/Part
Wheel Kit	04123
Split Full 26in Roller	04127
Light Kit (2019+)	04135
Split Wiehle 26in Roller	04137
26in Extended Wiehle Roller (2019+)	04146
Trans Pro 80 Tow-Behind Trailer	04238
Trans Pro 100 Tow-Behind Trailer	04240
Flat Ramp	04245
Rail Ramp Kit (Update)	04247
26in Stiff Grooming Brush	04276
Turf Evaluator	04399
Universal Groomer Drive	04707
Backlap Kit	04800
26in Twin Tip Groomer Reel	04803
26in Interlace Narrow Wiehle Roller Asm	04806
26in Full Front Roller Asm	04816
26in Wide Wiehle Roller Asm	04826
8-Blade 26in Fixed EDGESERIES CU	04842
11-Blade 26in Fixed EDGESERIES CU	04843
Bedknife-Highcut	104-2646
Bedknife-Fairway	107-8181
Bedknife-Micro-Cut	112-9275
Roller Extension Kit	115-7361
Bedknife-EDGEMAX, Tournament Cut	117-1548
MVP Kit-Cutting Unit Re-Build	121-2637
Premium Engine Oil 10w30 (55 Gallon Drum)	121-6392
Premium Engine Oil 10w30 (5 Gallon Pail)	121-6393
Toro Reel Paper (10 Pack)	125-5610
Toro Reel Shim (0.002in)	125-5611
26in Stiff Grooming Brush Kit	127-1549
Angle Indicator	131-6828
Angle Indicator Mount	131-6829
Blade-Groomer, Universal Harden Blade (Thin)	132-4626
Grease-Synthetic	136-8595
Bedbar-26in	138-1522-01
Bedknife-EDGEMAX, 26in Microcut Short	139-4322
Bedknife-EDGEMAX, 26in Tournament Short	139-4323
Bedknife-EDGEMAX, 26in Microcut	139-4324
Traction Lever Kit	139-4330
Access Backlap Kit	139-4342
Wireless Hour Meter Kit	139-4369
26in Interlaced Roller Scraper Asm	139-4394
26in Full Roller Scraper Asm	139-4398
26in Smooth Roller Scraper Brush Asm	139-5117
26in Interlaced Roller Scraper Brush Asm	139-5125
26in Wide Wiehle Roller Scraper Asm	139-7406

Attachments and Accessories (continued)

Wide Wiehle Roller Scraper Brush Asm 139-7410
Bedknife-1/8in 93-9015
Bedknife-Tournament Cut 94-5885
Height-of-Cut Bar 94-9010
Extended HOC Arm 99-4286



Count on it.