FORM NO. 3310-417

TORO®

MODEL NO. 10018-300001 & UP
MODEL NO. 10121-300001 & UP
MODEL NO. 10221-300001 & UP

PARTS CATALOG

18" & 21" SPORTLAWN

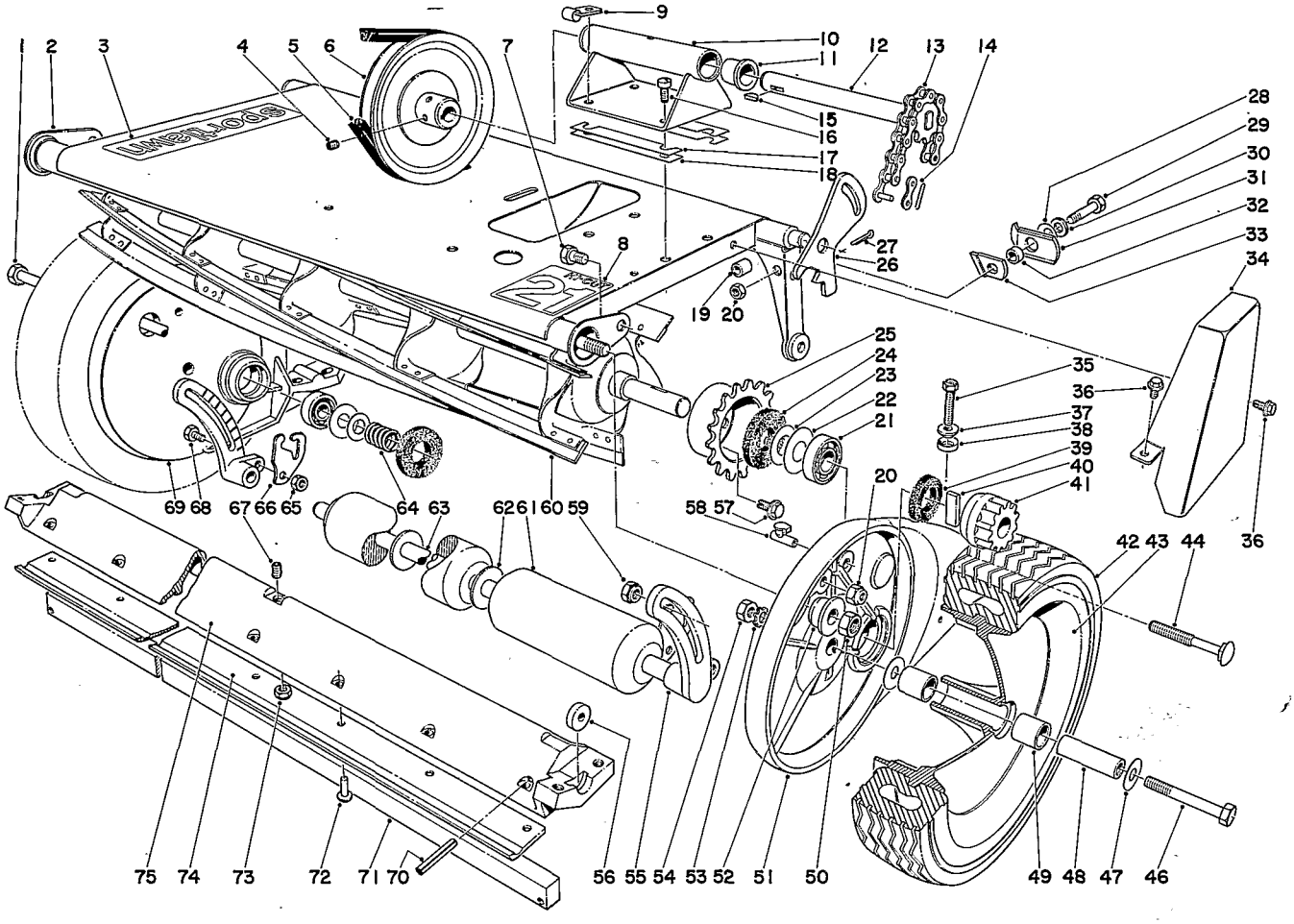

MAIN FRAME ASSEMBLY

Ref. No.	Part No.	Description	No. Used 18"	No. Used 21"
1	5-4801	Tie Rod	1	
	5-4802	Tie Rod		1
2	5-1541	Motor Platform	1	
	5-1586	Motor Platform		1
3	17-8980	Decal	1	1
4	3245-1	Set Screw	2	2
5	271-17	V-Belt	1	1
6	5-1494	Pulley	1	1
7	3210-3	Capscrew	2	2
8	17-9110	Decal 21" (Hi-Cut)		1
	17-9000	Decal 21" (Lo-Cut)		1
	17-8990	Decal 18"	1	
9	2412-32	Clutch Control Cable Clip	1	1
10	3-7459	Countershaft Housing (Incl. Ref. 11)	1	
	3-7469	Countershaft Housing (Incl. Ref. 11)		1

Ref, No.	Part No.	Description	No. Used 18"	No. Used 21"
11	3-4066	Bushing	2	2
12	5-1551	Countershaft	1	
	5-1587	Countershaft		1
13	5-1552	Chain	1	1
14	2710-21	Connecting Link	1	1
15	3257-5	Woodruff Key	1	1
16	32113-18	Fil. Hd. Mach. Screw	4	4
17	5-1500	Shim	2	
	5-1588	Shim		2
18	5-1498	Shim	2	
19	5-1537	Spacer	2	2
20	32146-4	Locknut	4	4
21	251-30	Bearing	2	2
22	5-1520	Bearing Seal	2	2
23	5-1078	Thrust Washer	2	2
24	5-1518	Felt Washer	2	2
25	5-1572	Reel Sprocket	1	

Copyright 1972 By
The Toro Company
Bloomington, Minnesota 55420 U.S.A.

Price $1.00

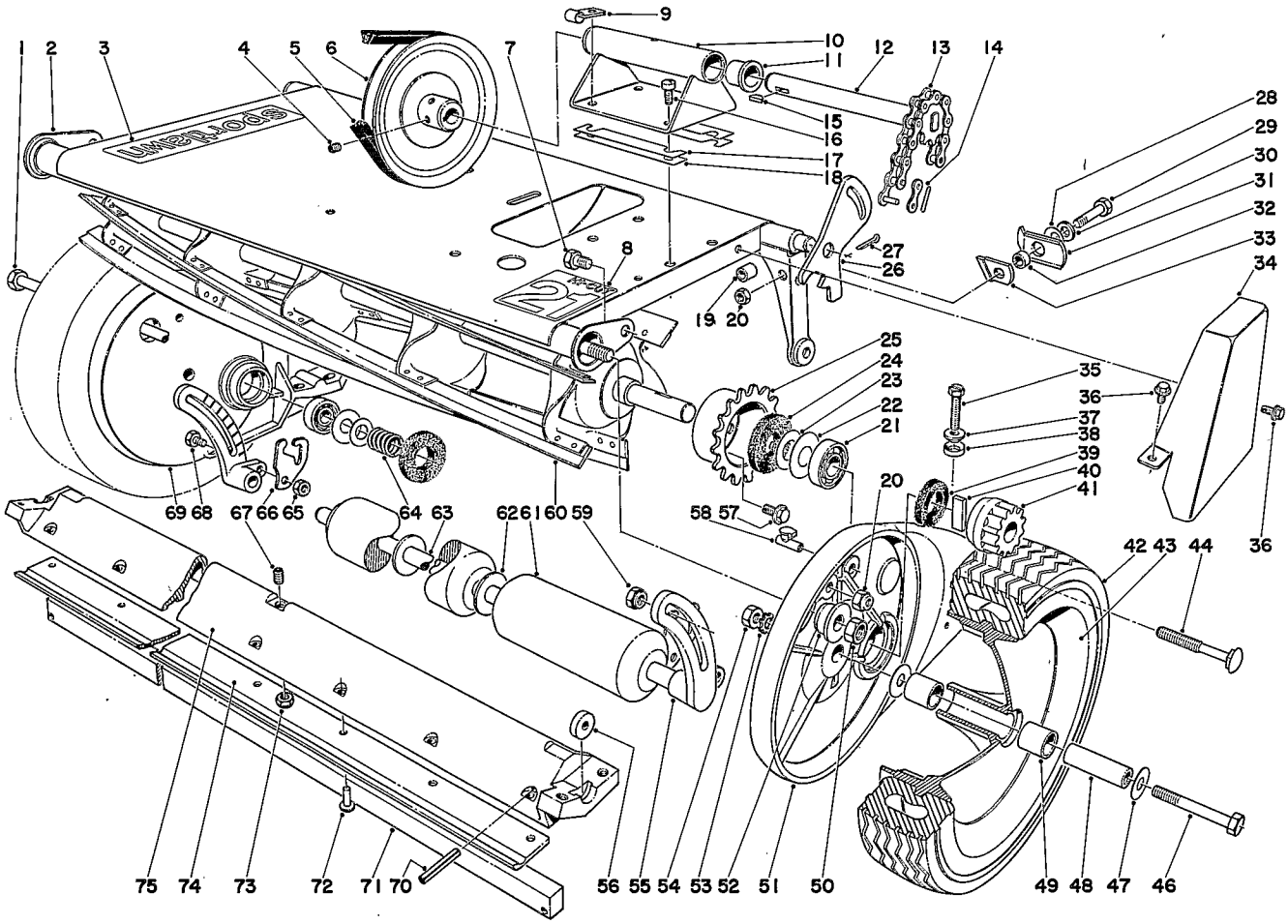

MAIN FRAME ASSEMBLY (Continued)

Ref. No.	Part No.	Description	No. Used 18"	No. Used 20"
25	3-3065	Reel Sprocket		1
26	5-5250	Handle Bracket	2	
	5-5250	Handle Bracket (Low-Cut)		2
	5-5260	Handle Bracket (Hi-Cut)		2
27	3272-11	Cotter Pin	2	2
28	3290-213	Spring Washer	2	2
29	3210-15	Capscrew	2	2
30	3256-23	Flatwasher	2	2
31	5-1536	Stop Lever	2	2
32	5-1557	Spacer	2	2
33	5-1540	Clip L.H.	1	1
*	5-1538	Clip R.H.	1	1
34	3-5593	Chain Guard Top	1	1
35	5-1497	Adjusting Screw	4	4
36	32140-32	Self-Tapping Screw	2	2
37	5-1515	Upper Washer	4	4
38	5-1516	Lower Washer	4	4
39	5-1522	Felt Washer	2	2
40	2-3620	Ratchet Dog	2	2
41	2-2209	Pinion Kit (Incl. Right & Left Pinions & Dogs)	1	1
42	4-2580	Tire	2	2
	3-3668	Tire (Hi-Cut)		2

Ref. No.	Part No.	Description	No. Used 18"	No. Used 21"
43	3-7389	Wheel w/Bushing (Incl. Ref. #49)	2	2
44	3-7253	Carriage Bolt	2	2
46	5-1513	Wheel Spindle Bolt	2	2
47	5-0744	Spindle Washer	4	4
48	5-1521	Wheel Spindle	2	2
49	256-32	Bushing	4	4
50	32146-2	Locknut	1	1
51	3-4789	Side Plate L.H. (Incl. Ref. #21 & 58)	1	1
52	3-4327	Tube End Spacer	2	2
53	3255-16	Lockwasher	2	2
54	3220-4	Jam Nut	2	2
55	2-3969	Roller Brkt. Set R.H. & L.H.	1	1
56	5-1517	Bed Bar Pivot	2	2
57	32140-16	Screw	3	3
58	301-2	Oil Cup	2	2
59	5-1505	Nut	2	2
60	4-7349	Reel Assembly	1	
	4-7329	Reel Assembly (Lo-Cut)		1
	4-7339	Reel Assembly (Hi-Cut)		1

*Not Illustrated

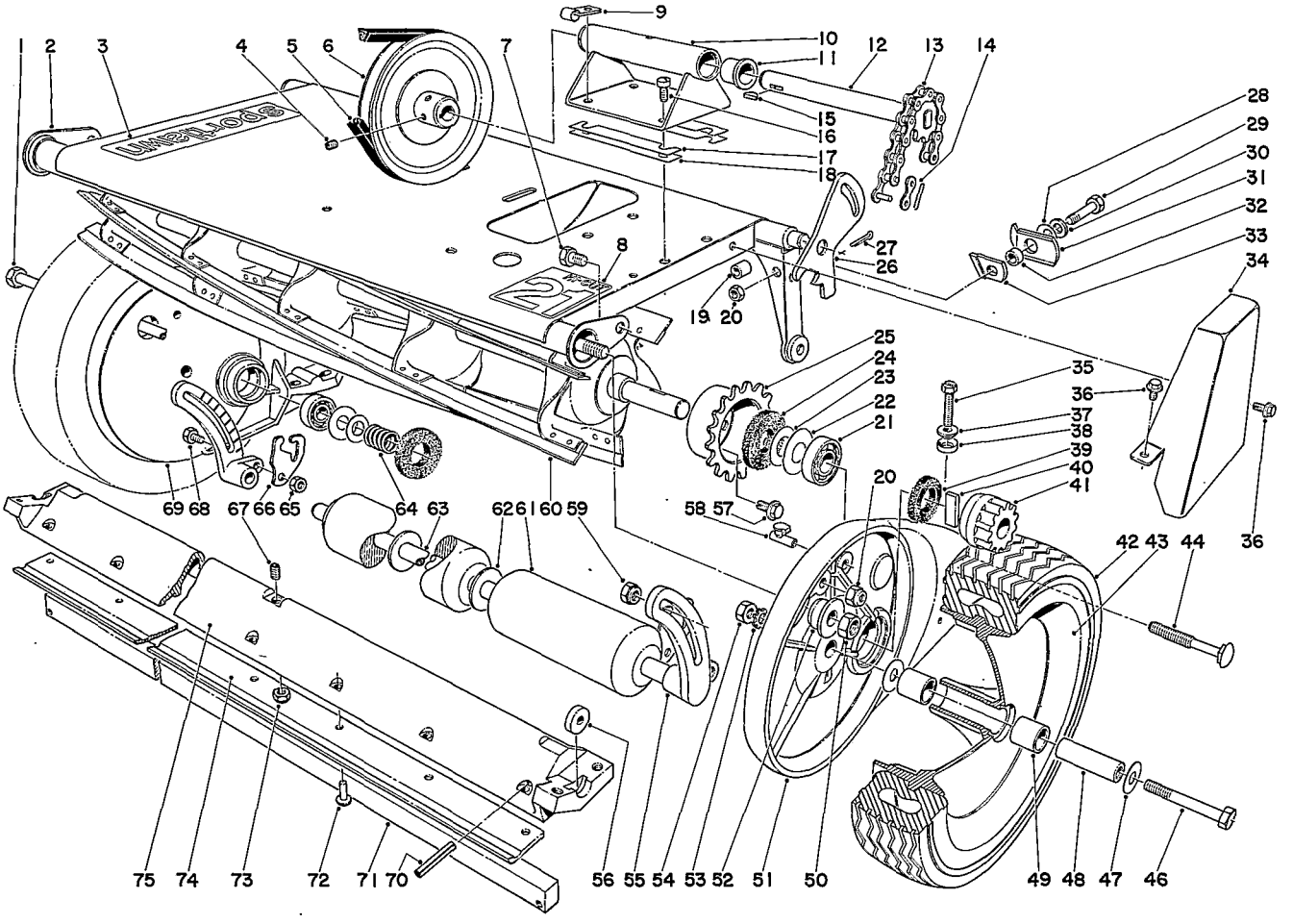

MAIN FRAME ASSEMBLY (Continued)

Ref. No.	Part No.	Description	No. Used 18"	No. Used 20"
61	5-1553	Roller Section	3	
	5-1511	Roller Section		3
62	3256-6	Flatwasher	2	2
63	5-1554	Roller Shaft	1	
	5-1510	Roller Shaft		1
64	3-3081	Compression Spring	1	1
65	32146-1	Locknut	2	2
66	3-3856	Grass Catcher Hook	2	2
67	3245-9	Setscrew		1
68	329-3	Capscrew	2	2
69	3-7369	Side Plate Assembly R.H. (Incl. Ref. #21 & 58)	1	1
70	32121-12	Roll Pin		2
71	5-3498	Adjusting Bar		1
72	3290-57	Rivet	6	
	3290-46	Pan Hd. Rivet (Lo-Cut)		7
	3290-50	Pan Hd. Rivet (Hi-Cut)		7

Ref. No.	Part No.	Description	No. Used 18"	No. Used 21"
73	32127-24	Nut		1
74	5-1544	Bed Knife	1	
	5-1514	Bed Knife (Lo-Cut)		1
	3-3068	Bed Knife (Hi-Cut)		1
75	5-1543	Bed Bar	1	
*	3-7429	Bed Bar Assembly (Incl. Ref. #72 & 74)	1	
*	5-7739	Bed Bar Assembly (Lo-Cut) (Incl. Ref.#67 & 70-75)		1
*	5-7729	Bed Bar Assembly (Hi-Cut) (Incl. Ref#67 & 70-75)		1
*	4-1999	Bed Bar Assembly (Incl. Ref. #67, 70, 71, 73 & 75)		1
*	3-7449	Countershaft Assembly (Inc. Ref. #4, 6, 10, 12 & 15)		1

*Not Illustrated

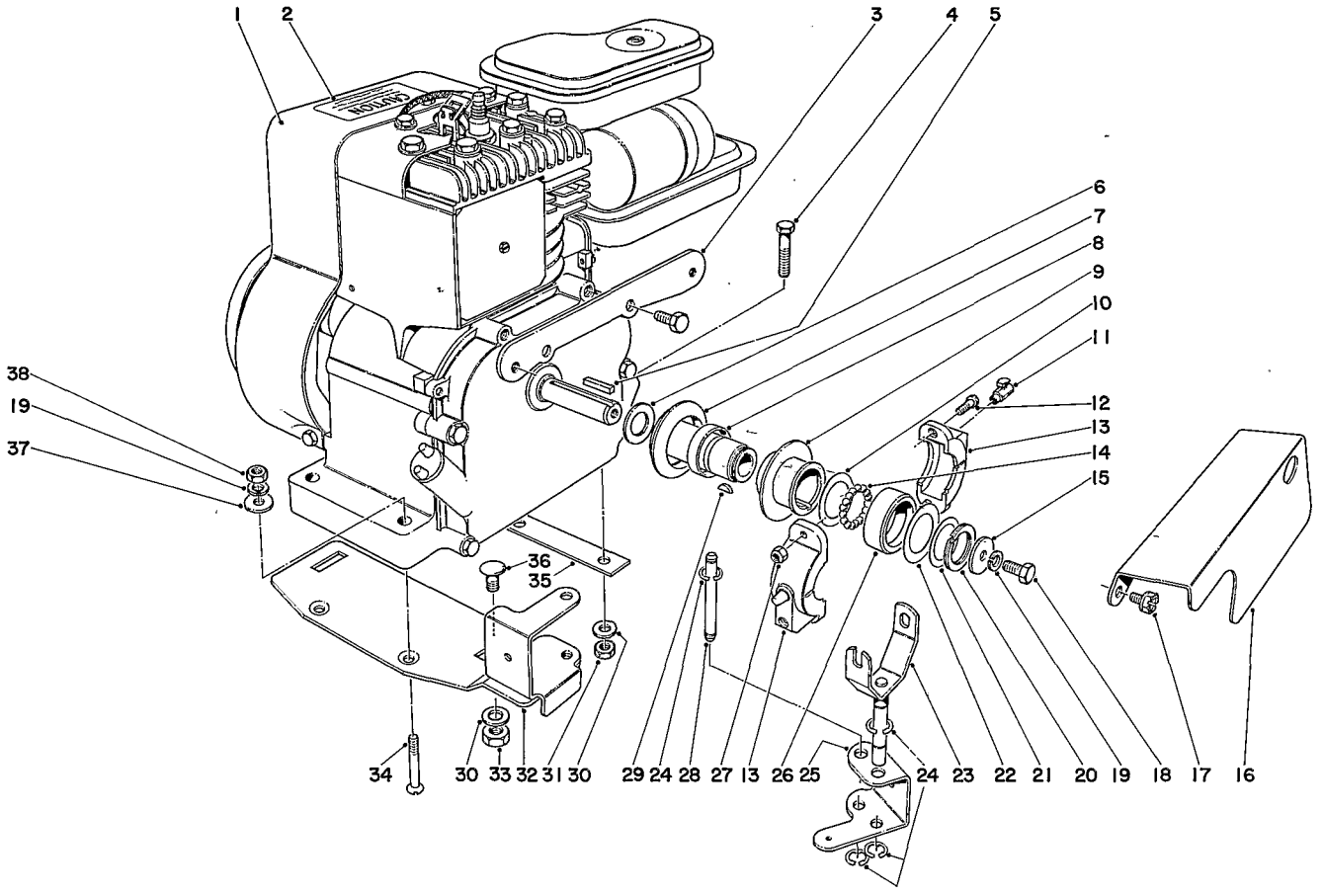

ENGINE ASSEMBLY

Ref. No.	Part No.	Description	No. Used 18"	No. Used 21"
1	221-448	Engine	1	1
2	12-6590	Decal Caution	1	1
3	3-7658	Bracket	1	1
4	3210-15	Capscrew	2	2
5	5-1077	Square Key	1	1
6	5-1574	Washer	1	1
7	5-1558	Clutch Body	1	1
8	5-1546	Idler Bushing	1	1
9	5-1545	Sliding Flange	1	1
10	5-1548	Thrust Washer	1	1
11	5-1555	Oiler	1	1
12	3250-4	Machine Screw	2	2
13	3-3517	Slip Ring	2	2
14	255-5	Steel Balls	18	18
15	4-8620	Washer	1	1
16	3-7661	Belt Guard	1	1
17	32140-39	Machine Screw	2	2
18	329-4	Capscrew	1	1
19	3253-3	Lockwasher	3	3
20	32120-14	Snap Ring	1	1
21	5-1550	Check Washer	1	1
22	5-1226	Slip Ring Washer	1	1

Ref. No.	Part No.	Description	No. Used 18"	No. Used 21"
23	5-4291	Shift Fork	1	1
24	32120-35	Snap Ring	4	4
25	5-4293	Shift Fork Bracket	1	1
26	5-1547	Shift Collar	1	1
27	3296-1	Nut	2	2
28	3-4031	Pivot Shaft	1	1
29	3257-1	Woodruff Key	1	1
30	3256-23	Flatwasher	4	4
31	32146-4	Nut	2	2
32	3-5780	Clutch Mounting Plate	1	1
33	32146-5	Nut	2	2
34	3289-10	Flat Head Screw	2	2
35	5-4294	Shim	1	1
36	3230-1	Carriage Bolt	2	2
37	3256-2	Flat Washer	2	2
38	3219-1	Nut	2	2
*	2-3029	Clutch Assembly (Incl. Ref. No's. 7-15 and 18-22, 26 & 29)	1	1
*	2-6739	Loose Parts Kit	1	
*	2-6769	Loose Parts Kit (Hi-cut)		1
*	4-7249	Loose Parts Kit (Lo-cut)		1

*Not Illustrated

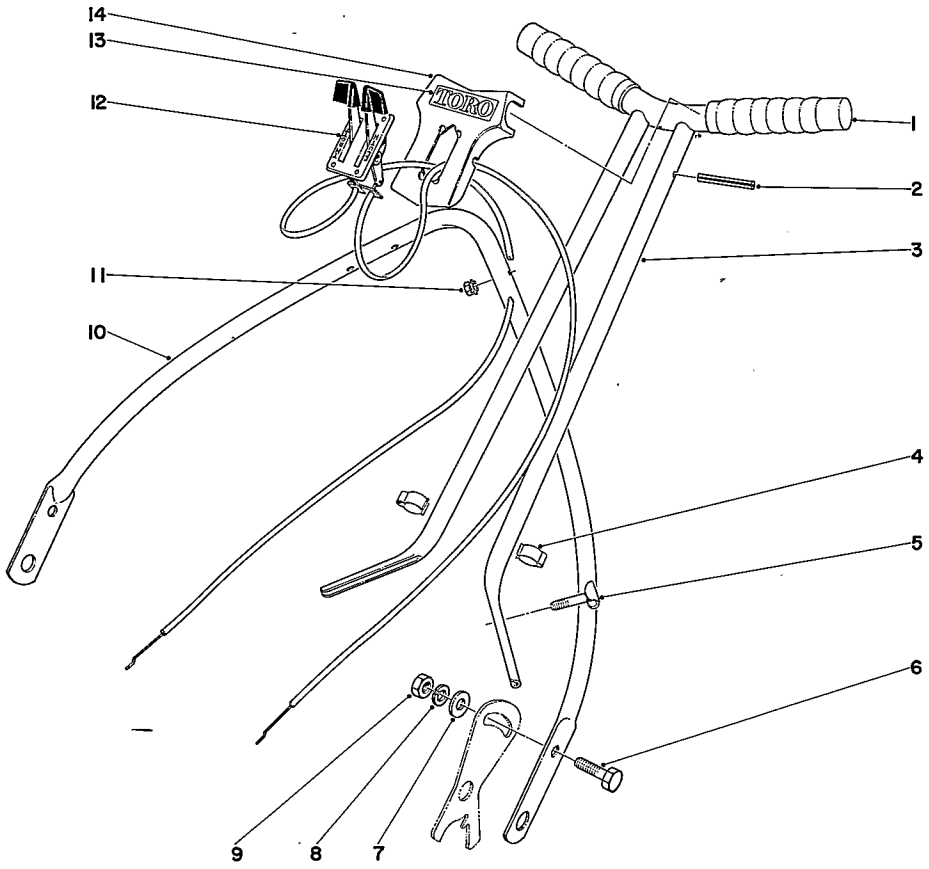

HANDLE ASSEMBLY

Ref. No.	Part No.	Description	No. Used	
			18"	21"
1	5-1994	Handle Grip	2	2
2	32121-10	Roll Pin	1	1
3	3-8340	Upper Handle	1	1
4	218-75	Clip	2	2
5	3-2654	Screw	4	4
6	3210-3	Capscrew	2	2
7	3256-23	Washer	2	2
8	3253-4	Lockwasher	2	2
9	3219-2	Nut	2	2
10	3-5598	Lower Handle		1
	3-5597	Lower Handle	1	
11	32149-2	Locknut	4	4
12	17-8940	Control Assembly	1	1
13	17-9040	Decal	1	1
14	3-5595	Cover Plate	1	1

ENGINE MODEL NO. 60102 TYPE 0332-01
BRIGGS & STRATTON

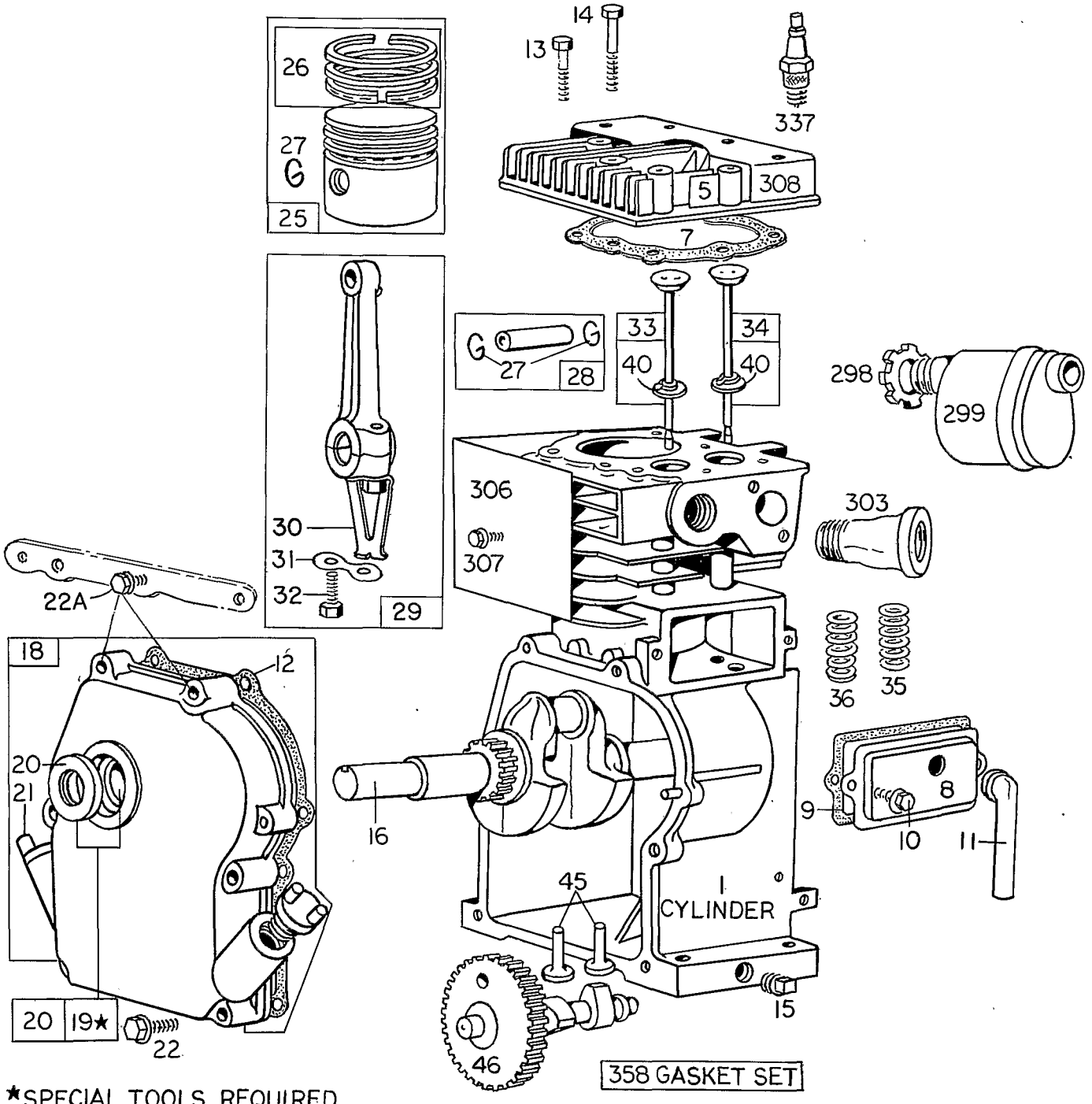

★SPECIAL TOOLS REQUIRED FOR INSTALLING

ENGINE MODEL NO. 60102 TYPE 0332-01
BRIGGS & STRATTON

Ref. No.	Part No.	Description	No. Used 18"	No. Used 21"
1	296561	Cylinder Assembly	1	1
5	210812	Head — Cylinder	1	1
7	†27670	Gasket — Cylinder Head	1	1
8	294178	Breather — Valve Chamber	1	1
9	†27549	Gasket — Valve Cover	1	1
10	93394	Screw — Breather Mounting Sem	1	1
11	66638	Tube — Breather	1	1
12	†27586	Gasket — Crankcase — .015" thick (Std.)	1	1
	†27617	Gasket — Crankcase — .005" thick	1	1
	†27618	Gasket — Crankcase — .009" thick	1	1
13	93111	Screw — Cylinder Head	1	1
14	93113	Screw — Cylinder Head	1	1
15	91249	Plug — Pipe, Standard, Square Head	1	1
16	260271	Crankshaft	1	1
18	294305	Cover Assy. — Crankcase	1	1
19	293708	Bushing — Crankcase Cover	1	1
		Note: Bushings require special tools for installation.		
20	89660	Seal — Oil	1	1
21	66768	Plug — Oil Filler	1	1
22	93032	Screw — Crankcase Cover Mounting Sem	4	4
22A	93466	Screw — Sem	2	2
25	295587	Piston Assy. — Standard	1	1
	295588	Piston Assembly — .010" O.S.	1	1
	295589	Piston Assembly — .020" O.S.	1	1
	295590	Piston Assembly — .030" O.S.	1	1
		Note: For Chrome Piston Ring Set for 2-3/8" Bore — std. size — order Part No. 297201.		
26	294232	Ring Set — Std. Piston Consists of: 210471 Ring, Piston, Comp., Top; 210472 Ring, Piston, Comp., Center; 210473 Ring, Piston, Oil	1	1
	294224	Ring Set — .010" O.S. Piston consists of: 210490 Ring, Piston, Comp., Top; 210489 Ring, Piston, Comp., Center; 210491 Ring, Piston, Oil	1	1
26	294225	Ring Set — .020" O.S. Piston Consists of: 210493 Ring, Piston, Comp., Top, .020" O.S.; 210492 Ring, Piston, Comp., Center, .020" O.S.; 210494 Ring, Piston, Oil, .020" O.S.	1	1
	294226	Ring Set — .030" O.S. Piston Consists of: 210496 Ring, Piston, Comp., Top, .030" O.S.; 210495 Ring, Piston, Comp., Center, .030" O.S.; 210497 Ring, Piston, Oil, .030" O.S.	1	1
27	26026	Lock — Piston Pin	1	1
28	298909	Pin Assy. — Piston — Std.	1	1
	298908	Pin Assy. — Piston — .005" O.S.	1	1
29	294300	Rod Assy. — Connecting	1	1
30	220459	Dipper — Connecting Rod	1	1
31	220460	Lock — Connecting Rod Screw	1	1
32	92296	Screw — Connecting Rod	1	1
33	296676	Valve — Exhaust	1	1
34	296677	Valve — Intake	1	1
35	260552	Spring — Intake Valve	1	1
36	26478	Spring — Exhaust Valve	1	1
40	93312	Retainer — Valve Spring	1	1
45	230173	Tappet — Valve	1	1
46	210453	Gear — Cam	1	1
298	220859	Locknut — Muffler	1	1
299	294441	Muffler — Exhaust	1	1
303	91810	Elbow — Exhaust, 45° Street	1	1
306	220478	Shield — Cylinder	1	1
307	93042	Screw — Cylinder Shield Mounting	1	1
308	220581	Cover — Cylinder Head	1	1
337	298809	Plug — Spark	1	1
		Note: Spark Plugs 298809, use Ignition Cable Terminal 221798.		
358	297275	Gasket Set	1	1

†Included in Gasket Set - Part No. 297275.

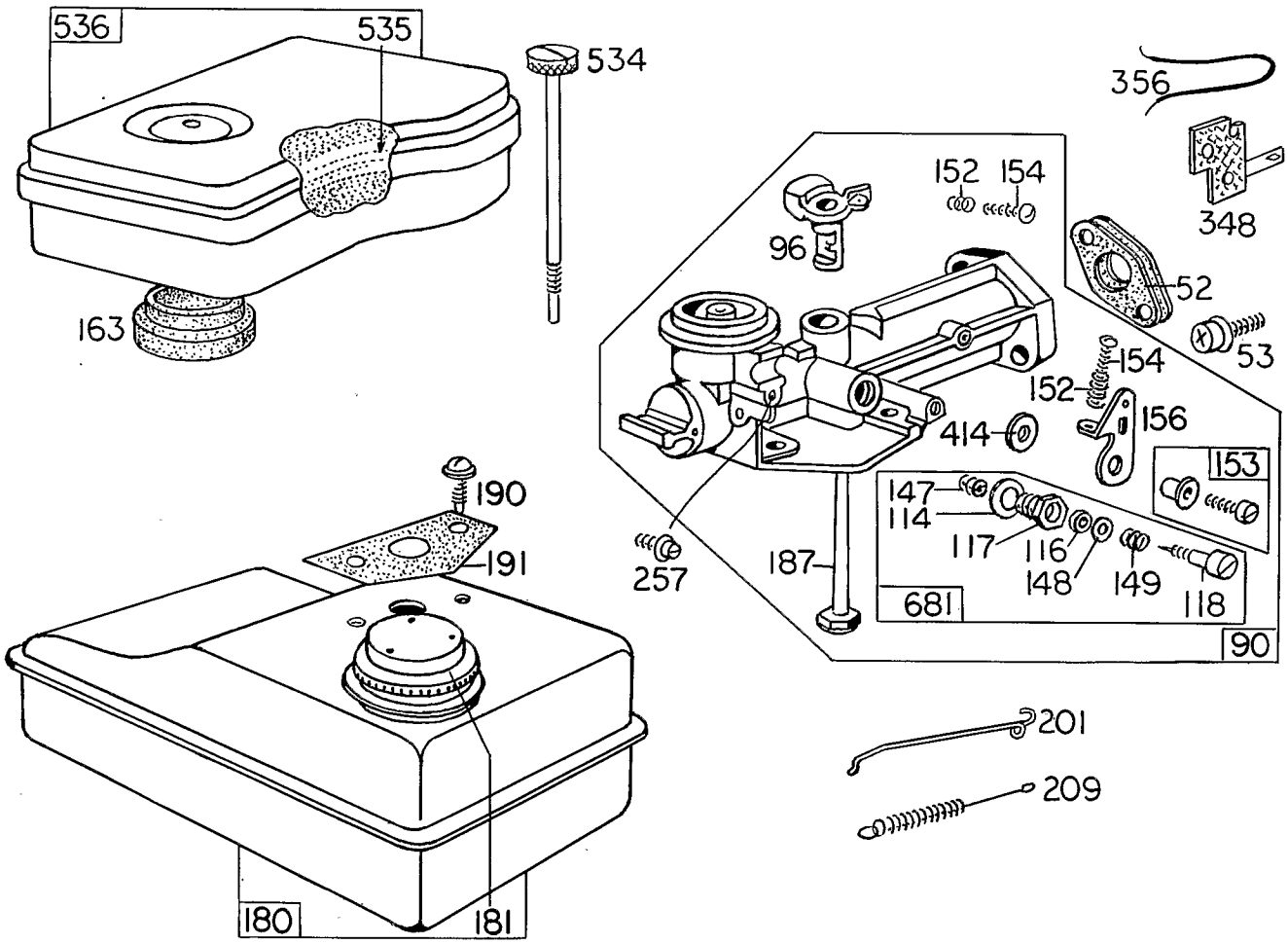

CARBURETOR ASSEMBLY

Ref. No.	Part No.	Description	No. Used 18"	No. Used 21"
52	†27355	Gasket — Intake Elbow	2	2
53	93353	Screw — Carburetor Mounting Sem	1	1
90	391338	Carburetor Assembly	1	1
96	210719	Throttle — Carburetor	1	1
114	65787	Gasket — Needle Valve	1	1
116	65978	Packing — Needle Valve	1	1
117	23431	Nut — Needle Valve	1	1
118	23433	Valve — Needle	1	1
147	23432	Seat — Needle Valve	1	1
148	22235	Washer — Needle Valve	2	2
149	26336	Spring — Needle Valve	1	1
152	260575	Spring — Speed and Throttle Adjustment	1	1
153	298031	Screw — Carburetor Lever	1	1
154	92634	Screw — Machine, Rd. Hd.	1	1
156	220678	Lever — Speed Adjuster	1	1

†Included in Gasket Set - Part No. 297275.

Ref. No.	Part No.	Description	No. Used 18"	No. Used 21"
163	27660	Gasket — Air Cleaner Mounting	1	1
180	291834	Tank Assembly — Fuel	1	1
181	298425	Cap — Fuel Tank	1	1
187	296476	Pipe — Fuel	1	1
190	93341	Screw — Fuel Tank Mtg.	1	1
191	†27404	Gasket — Fuel Tank Mtg.	1	1
201	260040	Link — Governor	1	1
209	260623	Spring — Governor	1	1
257	93263	Screw — Machine, Fil. Hd.	1	1
356	391115	Wire — Ground	1	1
414	22398	Washer	1	1
534	93322	Screw — Air Cleaner	1	1
535	27987	Element — Air Cleaner	1	1
536	296767	Cleaner Assy. — Air	1	1
681	299059	Needle Valve Kit	1	1

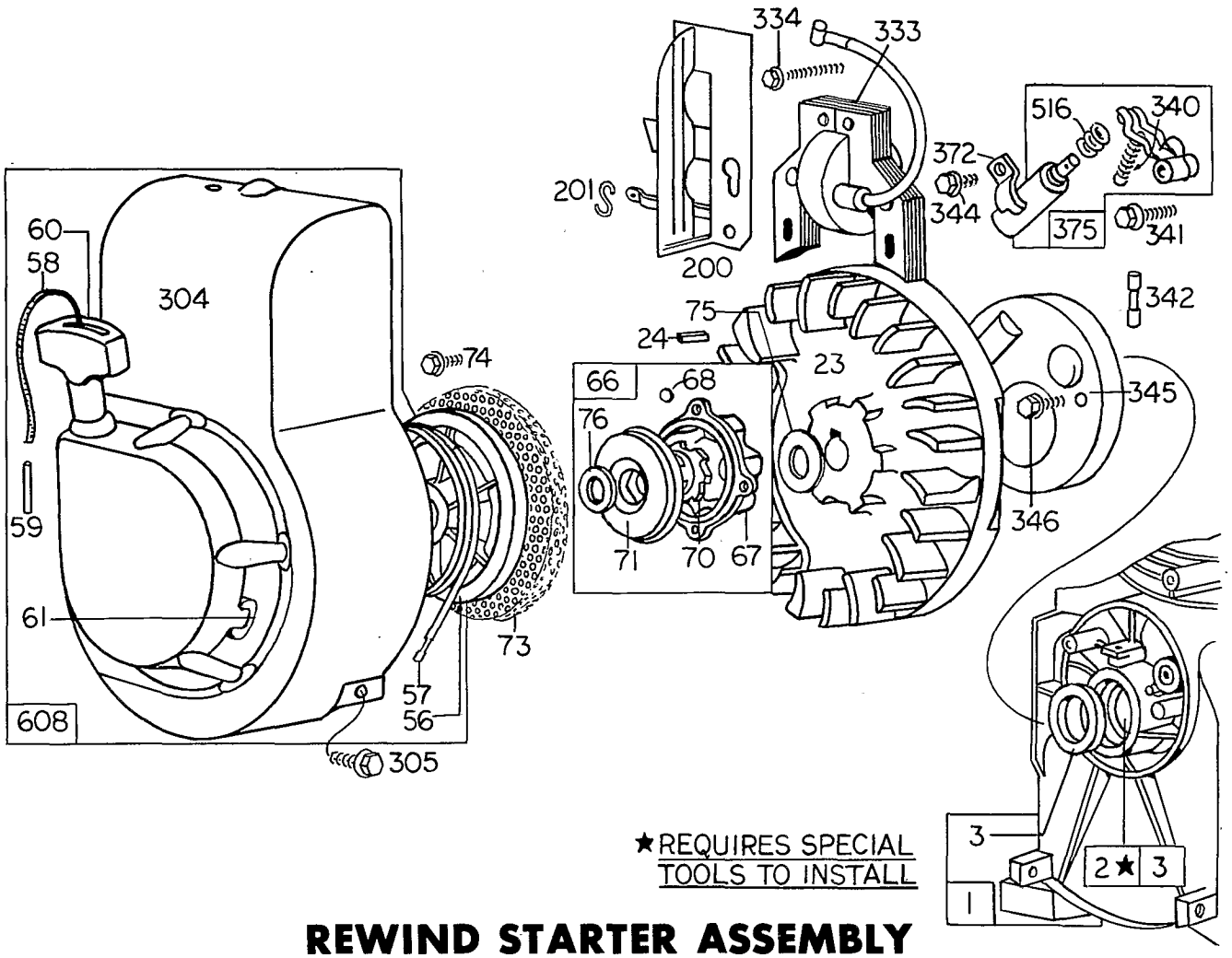

REWIND STARTER ASSEMBLY

Ref. No.	Part No.	Description	No. Used 18"	No. Used 21"
1	296561	Cylinder Assembly	1	1
2	293708	Bushing — Cylinder	1	1
3	89660	Seal — Oil	1	1
23	296884	Flywheel — Magneto	1	1
24	61760	Key — Flywheel	1	1
56	298738	Pulley — Rewind Starter	1	1
57	294303	Spring — Rewind Starter	1	1
58	66694	Rope — Starter	1	1
59	230228	Pin — Starter Grip	1	1
60	66728	Grip — Starter Rope	1	1
61	68618	Bumper — Starter Pulley	1	1
66	298310	Clutch Assembly — Rewind Starter	1	1
67	211383	Housing — Starter Clutch	1	1
68	63770	Ball — Clutch	1	1
70	298436	Ratchet — Rewind Starter	1	1
71	221653	Washer — Clutch Retainer	1	1
73	221661	Screen — Rotating	1	1
74	93490	Screw — Rotating Screen Mounting Sem	1	1
75	220865	Washer — Spring (Used to Lock Rewind Starter Clutch)	1	1
76	68238	Washer — Ratchet Sealing	1	1
200	297310	Blade — Governor	1	1
201	260040	Link — Governor	1	1

Ref. No.	Part No.	Description	No. Used 18"	No. Used 21"
304	294260	Housing — Blower	1	1
305	93158	Screw — Blower Housing Mounting Sem	1	1
333	298502	Armature — Magneto	1	1
334	93381	Screw — Armature Mounting Sem	1	1
340	26018	Spring — Breaker Arm	1	1
341	93381	Screw — Breaker Arm Mounting Sem	1	1
342	65704	Plunger — Breaker Point	1	1
344	93042	Screw — Condenser Mounting Sem	1	1
345	220366	Cover — Breaker Point and Condenser	1	1
346	93014	Screw — Dust Cover Mounting Sem	1	1
372	220477	Clamp — Condenser	1	1
375	294628	Breaker Points and Condenser Set Note: 299061 Ignition Kit Includes: 294628 Point Set, 65704 Plunger, 61760 Key — Flywheel	1	1
516	260374	Spring — Connector	1	1
608	294259	Starter Assembly — Rewind	1	1

PRODUCT CHANGES

In an effort to make improvements available to TORO owners as quickly as possible, minor changes are incorporated into Toro's products from time to time that do not become immediately shown in the Parts Catalog. If such a change apparently has been made in your unit, which is not reflected in your manual, see your TORO distributor or his Authorized TORO Service Dealer for information and part numbers.

IMPORTANT ORDERING INSTRUCTIONS

Repair parts are available from your Authorized TORO Service Dealer. To insure getting correct parts without delay, furnish the following information:

1. Serial number of your mower as shown on the name plate.
2. Part number, description, and quantity of each part required.
3. State whether parts should be shipped by mail or express. All repair parts are shipped F.O.B. Factory.
4. Name and address where parts are to be shipped.
5. Do not order by reference number; use part number only.

THE TORO PROMISE

It is Toro's policy to design and produce TORO products to provide our customers with a high level of performance and durability in normal operation. Our products, however, are produced in high volume, and it is inevitable that occasionally a unit will reach a customer with a defect in materials or workmanship which causes that unit to fall below the normal high level of TORO performance. Invariably, such a defect will be noticed in a residential product within one year, and in an institutional product within ninety days after purchase. Recognizing this possibility, Toro has established a simple guarantee policy and procedure that is intended to assure customer satisfaction. This guarantee statement is as follows:

The Toro Promise

The Toro Company promises to repair any TORO product for the original purchaser if defective in materials or workmanship. The following time periods from the date of purchase apply:

Residential products	1 year
Residential products used commercially	45 days
Institutional products	90 days

The costs of parts and labor are included, but the customer pays the transportation costs. Just return any residential product to an Authorized TORO Service Dealer, or any institutional product to a TORO distributor.

Should you feel that a product is defective, and wish to rely on The Toro Promise, the following procedure is recommended:

1. Contact any TORO dealer or distributor, but preferably the dealer or distributor from whom you purchased the product.
2. He will instruct you to either return the product to him, or tell you the name and address of your nearest Authorized TORO Service Dealer if the product is to be returned to such dealer.
3. Take the product and your original sales slip, or other evidence of purchase date, to the servicing dealer.
4. The servicing dealer will inspect the unit, advise you whether the product is defective and, if so, make all repairs necessary to correct the defect without extra charge to you.

If for any reason you are dissatisfied with the dealer's analysis of the defect or the service he performs, we urge you to contact us. Write:

TORO "Customer Care" Department
8111 Lyndale Avenue South
Bloomington, Minnesota 55420

MAINTENANCE RECORD

Date	Hours Used	Oil Change	Air Cleaner Service	Lubri-cation	Sharpen Reel Blade	Winter Storage	Spring Service	Spark Plug Gap

MAINTENANCE RECORD

Date	Hours Used	Oil Change	Air Cleaner Service	Lubri-cation	Sharpen Reel Blade	Winter Storage	Spring Service	Spark Plug Gap