Form No. 3433-820 Rev B

TORO®

Count on it.

Operator's Manual

# TimeCutter® MX 4275T and 5075T Riding Mower

**Model No. 74690—Serial No. 400000000 and Up**

**Model No. 74694—Serial No. 400000000 and Up**

Register at www.Toro.com.
Original Instructions (EN)

*3433-820*

This product complies with all relevant European directives; for details, please see the separate product specific Declaration of Conformity (DOC) sheet.

**Gross or Net Torque:** The gross or net torque of this engine was laboratory rated by the engine manufacturer in accordance with the Society of Automotive Engineers (SAE) J1940 or J2723. As configured to meet safety, emission, and operating requirements, the actual engine torque on this class of mower will be significantly lower. Please refer to the engine manufacturer's information included with the machine.

Go to www.Toro.com to view specifications on your model.

***Important:*** **If you are using a machine with a Toro engine above 1500 m (5,000 ft) for a continuous period, ensure that the High Altitude Kit has been installed so that the engine meets CARB/EPA emission regulations. The High Altitude Kit increases engine performance while preventing spark-plug fouling, hard starting, and increased emissions. Once you have installed the kit, attach the high-altitude label next to the serial decal on the machine. Contact any Authorized Toro Service Dealer to obtain the proper High Altitude Kit and high-altitude label for your machine. To locate a dealer convenient to you, access our website at www.Toro.com or contact our Toro Customer Care Department at the number(s) listed in your Emission Control Warranty Statement.**

**Remove the kit from the engine and restore the engine to its original factory configuration when running the engine under 1500 m (5,000 ft). Do not operate an engine that has been converted for high-altitude use at lower altitudes; otherwise, you could overheat and damage the engine.**

**If you are unsure whether or not your machine has been converted for high-altitude use, look for the following label.**

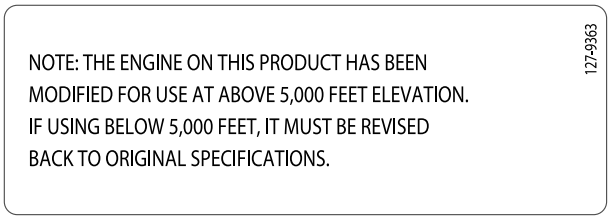


decal127-9363

**Figure 2**

# Introduction

This rotary-blade, riding lawn mower is intended to be used by homeowners in residential applications. It is designed primarily for cutting grass on well-maintained lawns. Using this product for purposes other than its intended use could prove dangerous to you and bystanders.

Read this information carefully to learn how to operate and maintain your product properly and to avoid injury and product damage. You are responsible for operating the product properly and safely.

Visit www.Toro.com for product safety and operation training materials, accessory information, help finding a dealer, or to register your product.

Whenever you need service, genuine Toro parts, or additional information, contact an Authorized Service Dealer or Toro Customer Service and have the model and serial numbers of your product ready. Figure 1 identifies the location of the model and serial numbers on the product. Write the numbers in the space provided.

***Important:*** **With your mobile device, you can scan the QR code on the serial number decal (if equipped) to access warranty, parts, and other product information.**

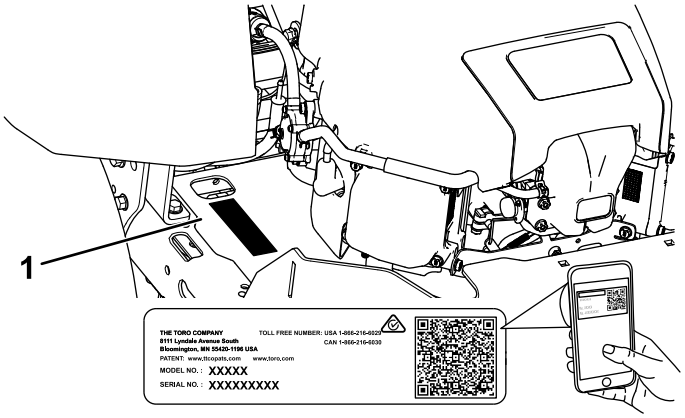


g297763

**Figure 1**

Under the seat

1. Model and serial number location

Write the product model and serial numbers in the space below:

**Model No.** _____

**Serial No.** _____

This manual uses 2 words to highlight information. **Important** calls attention to special mechanical

© 2020—The Toro® Company
8111 Lyndale Avenue South
Bloomington, MN 55420



Contact us at www.Toro.com.
Printed in the USA
All Rights Reserved

information and **Note** emphasizes general information worthy of special attention.

# Contents


Safety ..... 4
Safety Alert Symbol ..... 4
General Safety ..... 4
Slope Indicator ..... 5
Safety and Instructional Decals ..... 6
Product Overview ..... 10
Controls ..... 11
Before Operation ..... 12
Before Operation Safety ..... 12
Pre-Start ..... 13
Fuel Safety ..... 13
Adding Fuel ..... 14
Performing Daily Maintenance ..... 15
Breaking in a New Machine ..... 15
Using the Safety-Interlock System ..... 15
Positioning the Seat ..... 16
Adjusting the MyRide™ Suspension System ..... 16
Adjusting the Motion-Control Levers ..... 17
Converting to Side Discharge ..... 17
During Operation ..... 19
During Operation Safety ..... 19
Operating the Mower Blade-Control Switch (PTO) ..... 22
Operating the Throttle ..... 22
Operating the Choke ..... 22
Starting the Engine ..... 23
Shutting Off the Engine ..... 23
Using the Motion-Control Levers ..... 23
Driving the Machine ..... 24
Using the Smart Speed™ Control System ..... 24
Using the Side Discharge ..... 25
Adjusting the Height of Cut ..... 26
Adjusting the Anti-Scalp Rollers ..... 26
Operating Tips ..... 27
After Operation ..... 28
After Operation Safety ..... 28
Pushing the Machine by Hand ..... 30
Maintenance ..... 31
Recommended Maintenance Schedule(s) ..... 31
Maintenance Safety ..... 31
Pre-Maintenance Procedures ..... 33
Releasing the Mower-Deck Curtain ..... 33
Lubrication ..... 33
Greasing the Bearings ..... 33
Engine Maintenance ..... 34
Engine Safety ..... 34
Servicing the Air Cleaner ..... 34
Servicing the Engine Oil ..... 36
Servicing the Spark Plug ..... 38
Cleaning the Cooling System ..... 39
Fuel System Maintenance ..... 39
Replacing the In-Line Fuel Filter ..... 39
Electrical System Maintenance ..... 40
Electrical System Safety ..... 40
Servicing the Battery ..... 40
Drive System Maintenance ..... 42
Checking the Tire Pressure ..... 42
Releasing the Electric Brake ..... 42
Adjusting the Tracking ..... 42
Belt Maintenance ..... 43
Inspecting the Belts ..... 43
Replacing the Mower Belt ..... 43
Mower Maintenance ..... 45
Blade Safety ..... 45
Servicing the Cutting Blades ..... 45
Leveling the Mower Deck ..... 47
Removing the Mower Deck ..... 50
Installing the Mower Deck ..... 51
Replacing the Grass Deflector ..... 52
Cleaning ..... 53
Washing the Underside of the Mower Deck ..... 53
Disposing of Waste ..... 53
Storage ..... 54
Storage Safety ..... 54
Cleaning and Storage ..... 54
Storing the Battery ..... 55
Troubleshooting ..... 56
Schematics ..... 58

# Safety

This machine has been designed in accordance with EN ISO 5395:2013.

# Safety Alert Symbol

This Safety Alert Symbol (Figure 3) is used both in this manual and on the machine to identify important safety messages which must be followed to avoid accidents.

This symbol means: **ATTENTION! BECOME ALERT! YOUR SAFETY IS INVOLVED!**

g000502

**Figure 3**
Safety Alert Symbol

The safety alert symbol appears above information which alerts you to unsafe actions or situations and will be followed by the word **DANGER**, **WARNING**, or **CAUTION**.

**DANGER**: Indicates an imminently hazardous situation which, if not avoided, **Will** result in death or serious injury.

**WARNING**: Indicates a potentially hazardous situation which, if not avoided, **Could** result in death or serious injury.

**CAUTION**: Indicates a potentially hazardous situation which, if not avoided, **May** result in minor or moderate injury.

This manual uses two other words to highlight information. **Important** calls attention to special mechanical information and **Note** emphasizes general information worthy of special attention.

# General Safety

This machine is capable of amputating hands and feet and of throwing objects. Toro designed and tested this lawn mower to offer reasonably safe service; however, failure to comply with safety instructions may result in injury or death.

- Read, understand, and follow all instructions and warnings in the Operator's Manual and other training material, on the machine, engine, and attachments. All operators and mechanics should be trained. If the operator(s) or mechanic(s) can not read this manual, it is the owner's responsibility to explain this material to them; other languages may be available on our website.
- Only allow trained, responsible, and physically capable operators that are familiar with the safe operation, operator controls, and safety signs and instructions to operate the machine. Never let children or untrained people operate or service the equipment. Local regulations may restrict the age of the operator.
- Do Not operate the machine near drop-offs, ditches, embankments, water, or other hazards, or on slopes greater than 15 degrees.
- Do Not put your hands or feet near moving components of the machine.
- Never operate the machine with damaged guards, shields, or covers. Always have safety shields, guards, switches and other devices in place and in proper working condition.
- Stop the machine, shut off the engine, and remove the key before servicing, fueling, or unclogging the machine.

# Slope Indicator

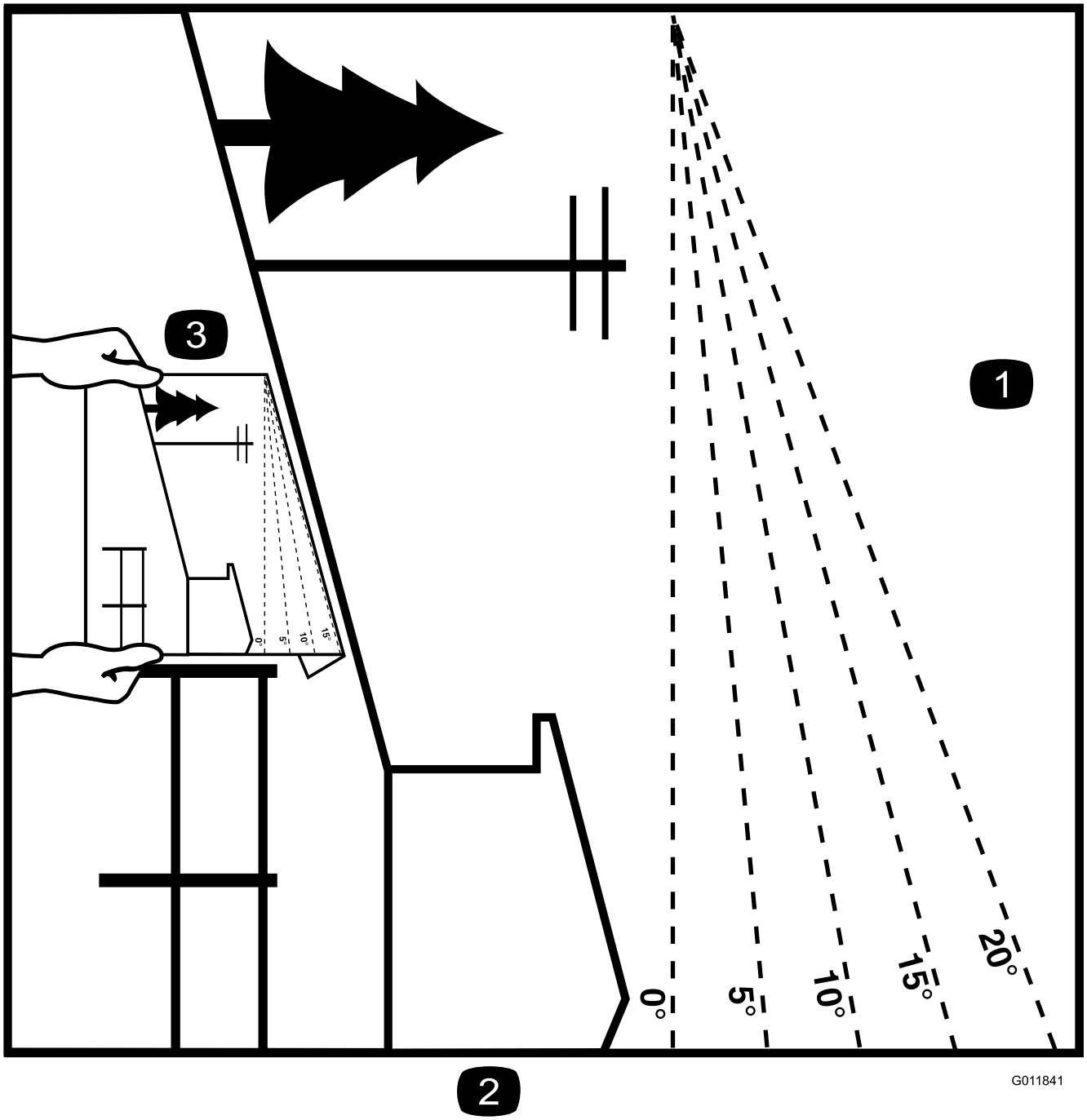


**Figure 4**

You may copy this page for personal use.

1. The maximum slope you can operate the machine on is **15 degrees**. Use the slope chart to determine the degree of slope of hills before operating. **Do not operate this machine on a slope greater than 15 degrees.** Fold along the appropriate line to match the recommended slope.
2. Align this edge with a vertical surface, a tree, building, fence pole, etc.
3. Example of how to compare slope with folded edge

# Safety and Instructional Decals

Safety decals and instructions are easily visible to the operator and are located near any area of potential danger. Replace any decal that is damaged or missing.

**Battery Symbols**

Some or all of these symbols are on your battery.

1. Explosion hazard
2. No fire, open flame, or smoking
3. Caustic liquid/chemical burn hazard
4. Wear eye protection.
5. Read the *Operator's Manual*.
6. Keep bystanders away from the battery.
7. Wear eye protection; explosive gases can cause blindness and other injuries.
8. Battery acid can cause blindness or severe burns.
9. Flush eyes immediately with water and get medical help fast.
10. Contains lead; do not discard

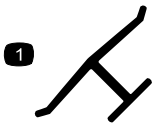


**Manufacturer's Mark**

1. This mark indicates that the blade is identified as a part from the original machine manufacturer.

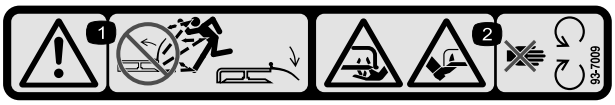


**93-7009**

1. Warning—do not operate the mower with the deflector up or removed; keep the deflector in place.
2. Cutting/dismemberment hazard of hand or foot, mower blade—stay away from moving parts.

Decal 99-3943 is for models with 127-cm decks.

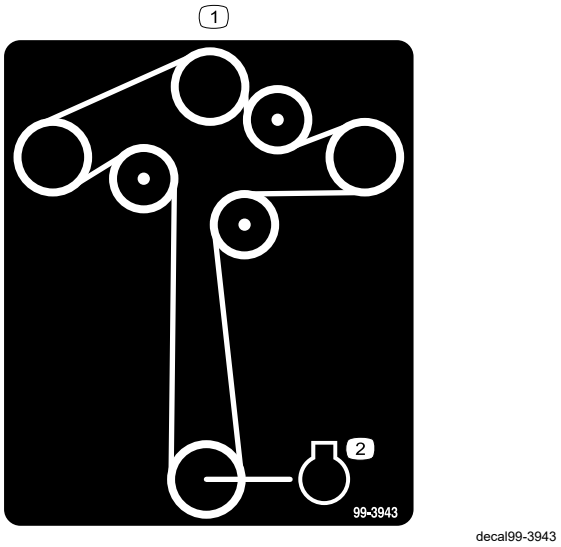


**99-3943**

1. Belt routing
2. Engine

Decal 105-7015 is for models with 107-cm decks.

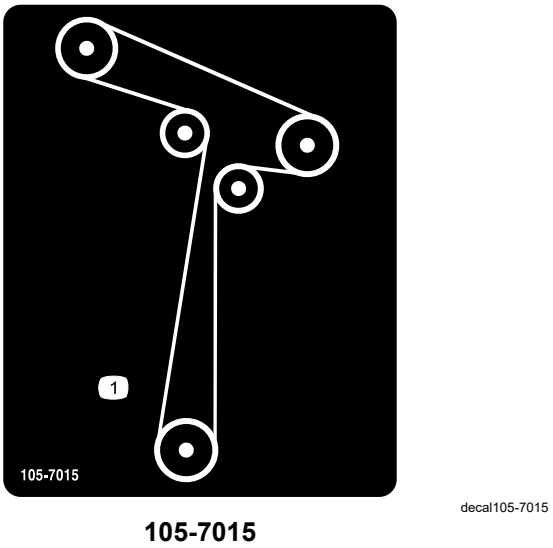


**105-7015**

1. Belt routing

Decal 112-9840 is for models with 127-cm decks.

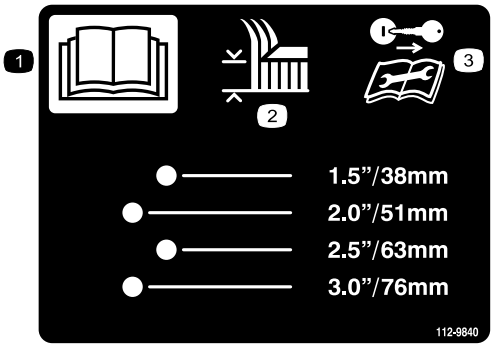


decal112-9840

**112-9840**

1. Read the *Operator's Manual*.
2. Height of cut
3. Remove the ignition key and read the instructions before servicing or performing maintenance.

---

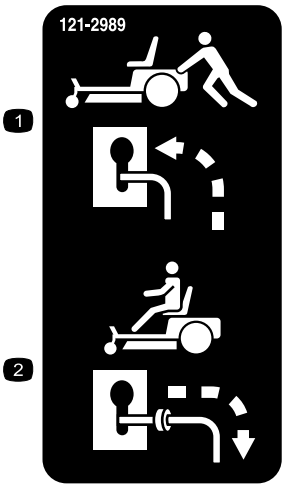


decal121-2989b

**121-2989**

1. Bypass lever position for pushing the machine
2. Bypass lever position for operating the machine

---

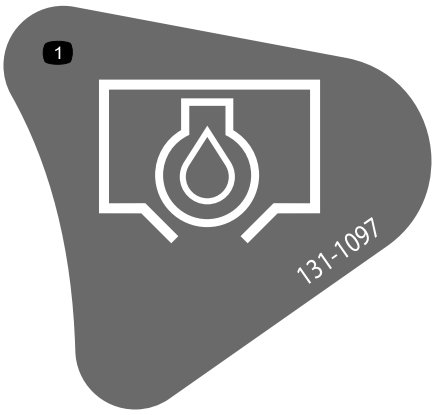


decal131-1097

**131-1097**

1. Oil drain

---

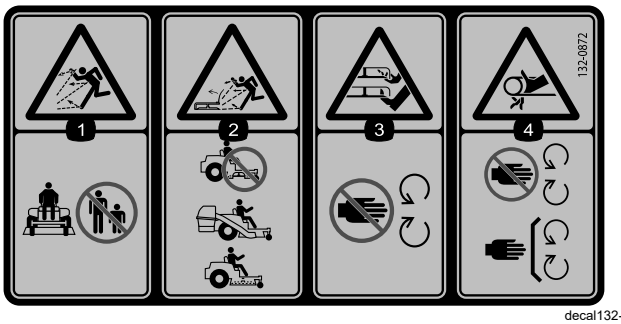


decal132-0872

**132-0872**

1. Thrown object hazard—keep bystanders away from the machine.
2. Thrown object hazard, raised baffle—do not operate the machine with an open deck; use a bagger or a baffle.
3. Severing hazard of hand or foot—keep away from moving parts.
4. Entanglement hazard—keep away from moving parts; keep all guards and shields in place.

---

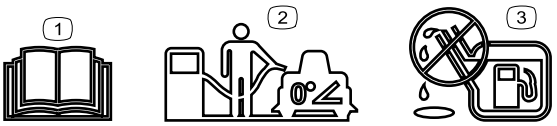


decal138-2456

**138-2456**

1. Read the *Operator’s Manual*.
2. Park the machine on a level surface when filling the fuel tank.
3. Do not overfill the fuel tank.

---

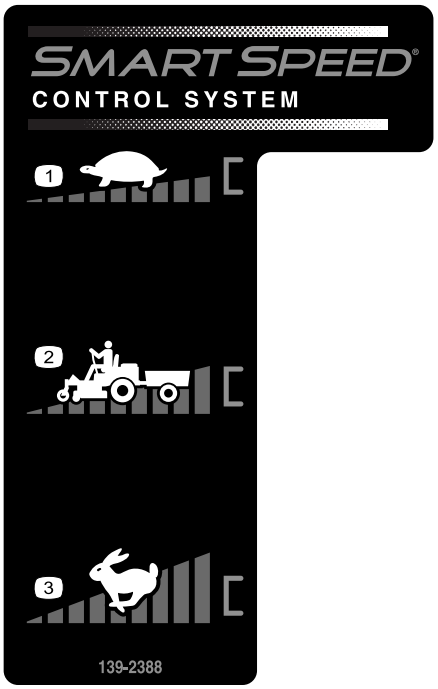


decal139-2388

**139-2388**

1. Slow
2. Hauling
3. Fast

---

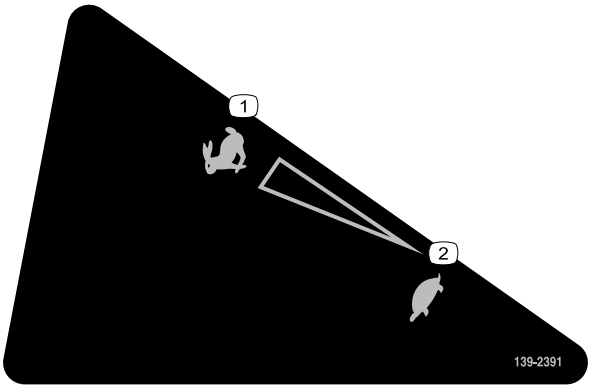


decal139-2391

**139-2391**

1. Fast
2. Slow

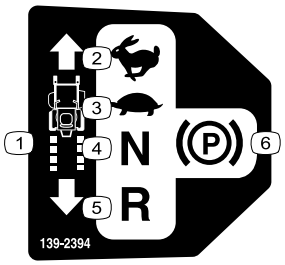


decal139-2394

**139-2394**

1. Traction controls
2. Fast
3. Slow
4. Neutral
5. Reverse
6. Parking brake

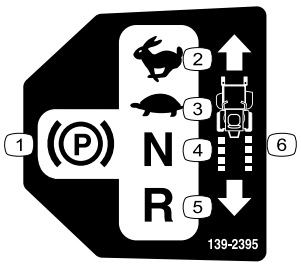


decal139-2395

**139-2395**

1. Parking brake
2. Fast
3. Slow
4. Neutral
5. Reverse
6. Traction controls

decal140-2748

**140-2748**

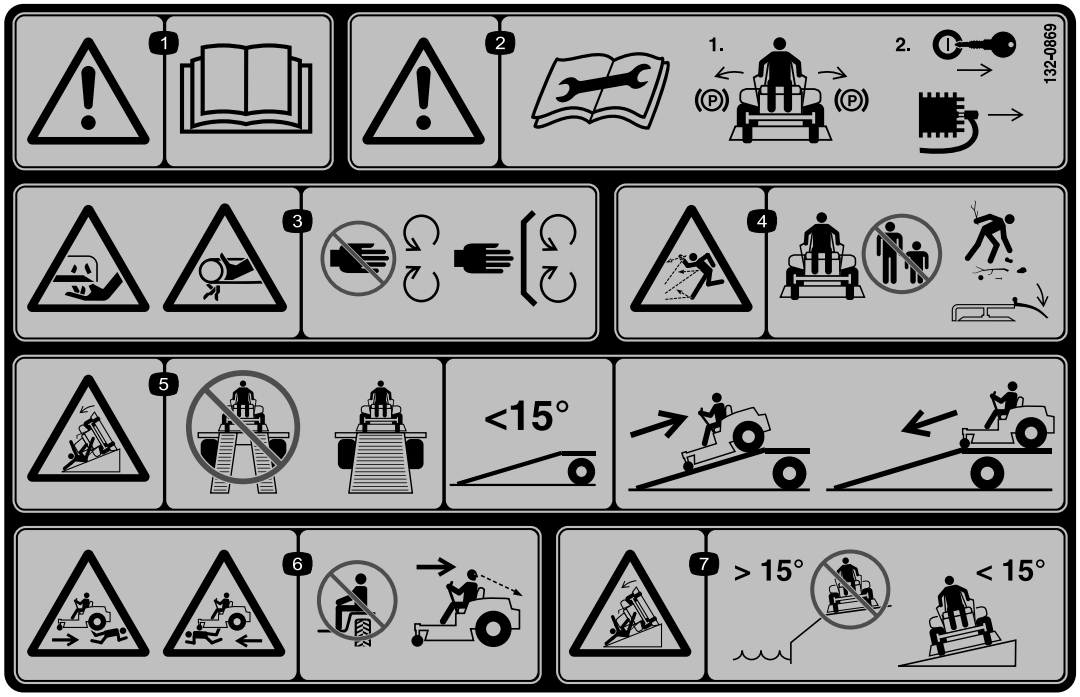


decal132-0869

**132-0869**

**Note:** This machine complies with the industry standard stability test in the static lateral and longitudinal tests with the maximum recommended slope indicated on the decal. Review the instructions for operating the machine on slopes in the *Operator's Manual* as well as the conditions in which you would operate the machine to determine whether you can operate the machine in the conditions on that day and at that site. Changes in the terrain can result in a change in slope operation for the machine.

1. Warning—read the *Operator's Manual*.
2. Warning—read the *Operator's Manual* before performing maintenance; engage the parking brake, remove the key, and disconnect the spark plug.
3. Cutting/dismemberment hazard of the hand, mower blade; entanglement hazard of the hand, belt—stay away from moving parts; keep all guards and shields in place.
4. Thrown object hazard—keep bystanders away; pick up debris before operating; keep the deflector in place.
5. Tipping hazard—do not use dual ramps when loading onto a trailer; use 1 ramp wide enough for the machine; use a ramp with a slope less than 15°; back up the ramp when loading the machine and drive forward off the ramp when unloading.
6. Runover hazard—do not carry passengers; look behind you when mowing in reverse.
7. Tipping hazard—do not use the machine near drop-offs or on slopes greater than 15°; only operate across slopes less than 15°.

# Product Overview

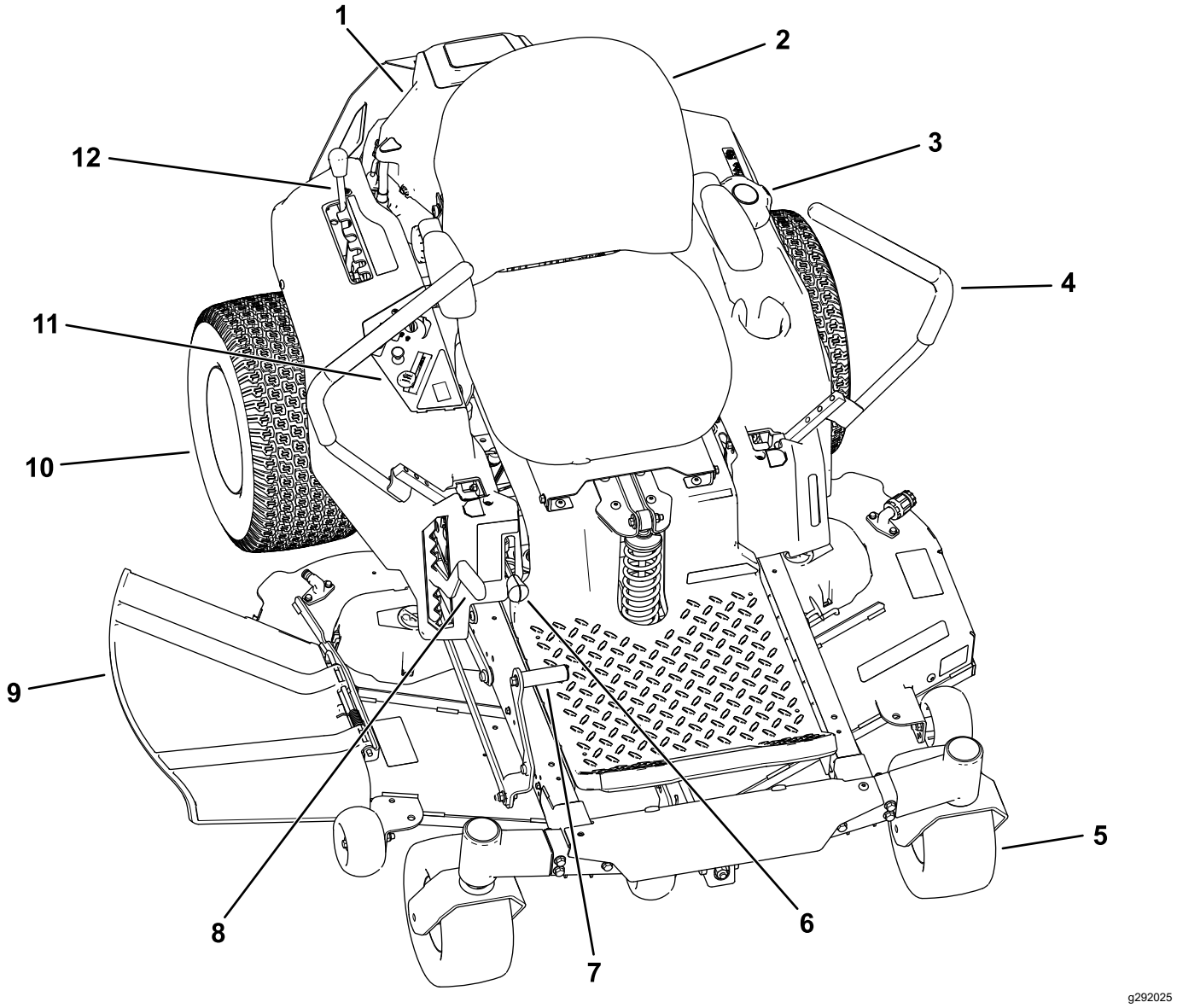


**Figure 5**

| | | | |
|---|---|---|---|
| 1. Engine | 4. Motion-control levers | 7. Deck-lift pedal (machines with 127cm or 50in decks only) | 10. Rear drive wheel |
| 2. Operator seat | 5. Front caster wheel | 8. Height-of-cut lever | 11. Control panel |
| 3. Fuel-tank cap | 6. Smart Speed™ lever | 9. Deflector | 12. MyRide™ adjustment lever |

# Controls

Become familiar with all the controls before you start the engine and operate the machine.

## Control Panel

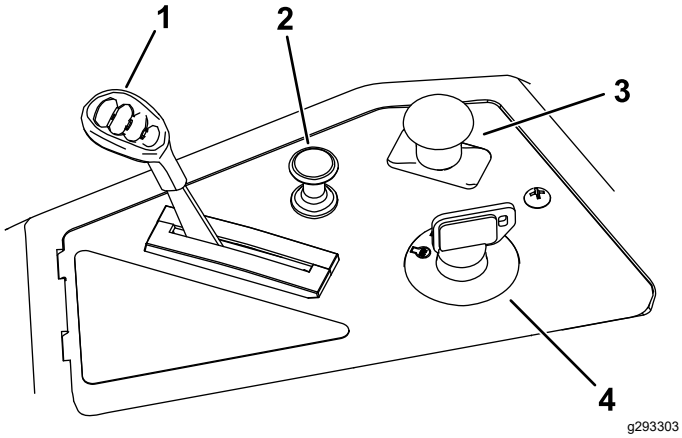


**Figure 6**

1. Throttle control
2. Choke control
3. Blade-control switch (power takeoff)
4. Key switch

## Key Switch

The key switch, used to start and shut off the engine, has 3 positions: OFF, RUN, and START (Figure 6). Refer to Starting the Engine (page 23).

## Throttle Control

The throttle controls the engine speed, and it has a continuous-variable setting from the SLOW to FAST position (Figure 6).

## Choke Control

Use the choke control to start a cold engine (Figure 6).

## Blade-Control Switch (Power Takeoff)

The blade-control switch, represented by a power-takeoff (PTO) symbol, engages and disengages power to the mower blades (Figure 6).

## Motion-Control Levers

Use the motion-control levers to drive the machine forward, reverse, and turn either direction (Figure 5).

## Park Position

Move the motion-control levers outward from the center to the PARK position when exiting the machine (Figure 23). Always position the motion-control levers into the PARK position when you stop the machine or leave it unattended.

## MyRide™ Adjustment Lever

Use the MyRide™adjustment lever to adjust the seat suspension (Figure 5).

## Smart Speed™ Control System Lever

The Smart Speed™ Control-System lever, located below the operating position, gives you a choice to drive the machine at 3 speed ranges— trim, tow, and mow (Figure 5).

## Fuel-Presence Window

You can use the fuel window, located on the left side of the machine, to verify the presence of fuel in the tank (Figure 7).

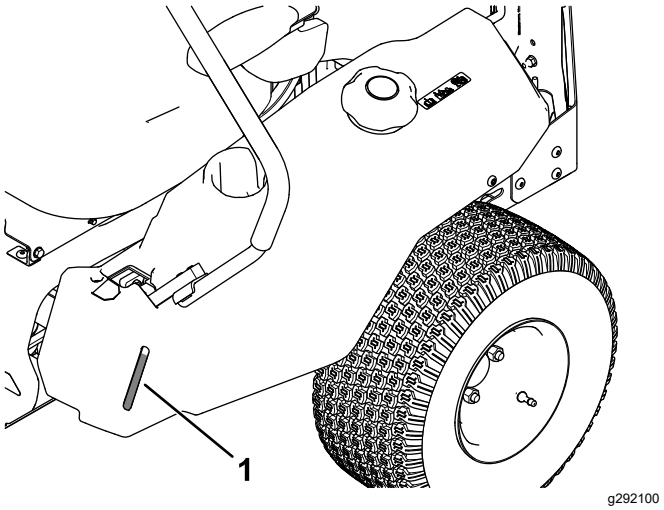


**Figure 7**

1. Fuel-presence window

## Height-of-Cut Lever

Use the height-of-cut lever to lower and raise the deck from the seated position. Moving the lever up (toward you) raises the deck from the ground and moving the lever down (away from you) lowers the deck toward the ground. Adjust the height-of-cut only while the machine is not moving (Figure 27).

## Foot Pedal Deck-Lift System

**Machines with 127cm (50in) Decks Only**

The foot pedal deck-lift system allows you to lower and raise the deck from the seated position. You can use the foot pedal to lift the deck briefly to avoid obstacles (Figure 5).

## Attachments/Accessories

A selection of Toro approved attachments and accessories is available for use with the machine to enhance and expand its capabilities. Contact your Authorized Service Dealer or authorized Toro distributor or go to www.Toro.com for a list of all approved attachments and accessories.

To ensure optimum performance and continued safety certification of the machine, use only genuine Toro replacement parts and accessories. Replacement parts and accessories made by other manufacturers could be dangerous, and such use could void the product warranty.

# Operation

**Note:** Determine the left and right sides of the machine from the normal operating position.

# *Before Operation*

## Before Operation Safety

- Evaluate the terrain to determine what accessories and attachments are needed to properly and safely perform the job. Only use accessories and attachments approved by Toro.
- Inspect the area where the equipment is to be used and remove all rocks, toys, sticks, wires, bones, and other foreign objects. These can be thrown or interfere with the operation of the machine and may cause personal injury to the operator or bystanders.
- Wear appropriate personal protective equipment such as safety glasses, substantial slip-resistant footwear, and hearing protection. Tie back long hair and avoid loose clothing and loose jewelry which may get tangled in moving parts.

**⚠ CAUTION**

**This machine produces sound levels in excess of 85 dBA at the operator's ear and can cause hearing loss through extended periods of exposure.**

**Wear hearing protection when operating this machine.**

- Check that the operator presence controls, safety switches, and shields are attached and functioning properly. Do Not operate unless they are functioning properly.
- Do Not operate the mower when people, especially children, or pets are in the area. Stop the machine and attachment(s) if anyone enters the area.
- Do Not operate the machine without the entire grass collection system, discharge deflector, or other safety devices in place and in proper working condition. Grass catcher components are subject to wear, damage and deterioration, which could expose moving parts or allow objects to be thrown. Frequently check for worn or deteriorating components and replace them with the manufacturer's recommended parts when necessary.

# Pre-Start

Fill fuel tank on level ground. See **Fuel Recommendations** in the Specifications section for additional gasoline information.

**Do Not** add oil to gasoline.

**Do Not** overfill fuel tank. Fill the fuel tank to the bottom of the filler neck. The empty space in the tank allows gasoline to expand. Overfilling may result in fuel leakage or damage to the engine or emission system.

Make sure you understand the controls, their locations, their functions, and their safety requirements.

Refer to the Maintenance section and perform all the necessary inspection and maintenance steps.

# Fuel Safety

Use extreme care when handling fuel.

**⚠ DANGER**

**In certain conditions gasoline is extremely flammable and vapors are explosive.**

**A fire or explosion from gasoline can burn you, others, and cause property damage.**

- **Fill the fuel tank outdoors on level ground, in an open area, when the engine is cold. Wipe up any gasoline that spills.**
- **Never refill the fuel tank or drain the machine indoors or inside an enclosed trailer.**
- **Do Not fill the fuel tank completely full. Fill the fuel tank to the bottom of the filler neck. The empty space in the tank allows gasoline to expand. Overfilling may result in fuel leakage or damage to the engine or emission system.**
- **Never smoke when handling gasoline, and stay away from an open flame or where gasoline fumes may be ignited by spark.**
- **Store gasoline in an approved container and keep it out of the reach of children.**
- **Add fuel before starting the engine. Never remove the cap of the fuel tank or add fuel when engine is running or when the engine is hot.**
- **If fuel is spilled, Do Not attempt to start the engine. Move away from the area of the spill and avoid creating any source of ignition until fuel vapors have dissipated.**
- **Do Not operate without entire exhaust system in place and in proper working condition.**

**⚠ DANGER**

**In certain conditions during fueling, static electricity can be released causing a spark which can ignite gasoline vapors. A fire or explosion from gasoline can burn you and others and cause property damage.**

- **Always place gasoline containers on the ground away from your vehicle before filling.**
- **Do Not fill gasoline containers inside a vehicle or on a truck or trailer bed because interior carpets or plastic truck bed liners may insulate the container and slow the loss of any static charge.**
- **When practical, remove gas-powered equipment from the truck or trailer and refuel the equipment with its wheels on the ground.**
- **If this is not possible, then refuel such equipment on a truck or trailer from a portable container, rather than from a gasoline dispenser nozzle.**
- **If a gasoline dispenser nozzle must be used, keep the nozzle in contact with the rim of the fuel tank or container opening at all times until fueling is complete. Do Not use a nozzle lock open device.**

**⚠ WARNING**

**Gasoline is harmful or fatal if swallowed. Long-term exposure to vapors has caused cancer in laboratory animals. Failure to use caution may cause serious injury or illness.**

- **Avoid prolonged breathing of vapors.**
- **Keep face away from nozzle and gas tank/container opening.**
- **Keep away from eyes and skin.**
- **Never siphon by mouth.**

To help prevent fires:

- Keep engine and engine area free from accumulation of grass, leaves, excessive grease or oil, and other debris which can accumulate in these areas.
- Clean up oil and fuel spills and remove fuel soaked debris.
- Allow the machine to cool before storing the machine in any enclosure. Do Not store near flame or any enclosed area where open pilot lights or heat appliances are present.

# Adding Fuel

## Recommended Fuel

- For best results, use only clean, fresh (less than 30 days old), unleaded gasoline with an octane rating of 87 or higher ((R+M)/2 rating method).
- **Ethanol**: Gasoline with up to 10% ethanol (gasohol) or 15% MTBE (methyl tertiary butyl ether) by volume is acceptable. Ethanol and MTBE are not the same. Gasoline with 15% ethanol (E15) by volume is not approved for use. **Never use gasoline that contains more than 10% ethanol by volume**, such as E15 (contains 15% ethanol), E20 (contains 20% ethanol), or E85 (contains up to 85% ethanol). Using unapproved gasoline may cause performance problems and/or engine damage which may not be covered under warranty.
- **Do not** use gasoline containing methanol.
- **Do not** store fuel either in the fuel tank or fuel containers over the winter unless you use a fuel stabilizer.
- **Do not** add oil to gasoline.

## Using Stabilizer/Conditioner

Use fuel stabilizer/conditioner in the machine to keep the fuel fresh longer when used as directed by the fuel-stabilizer manufacturer.

***Important:*** **Do not use fuel additives containing methanol or ethanol.**

Add the amount of fuel stabilizer/conditioner to fresh fuel as directed by the fuel-stabilizer manufacturer.

## Filling the Fuel Tank

1. Park the machine on a level surface.
2. Move the motion-control levers outward to the PARK position.
3. Shut off the engine and remove the key.
4. Clean around the fuel-tank cap.
5. Fill the fuel tank to the bottom of the filler neck (Figure 8).

   **Note:** Do not fill the fuel tank completely full. The empty space in the tank allows the fuel to expand.

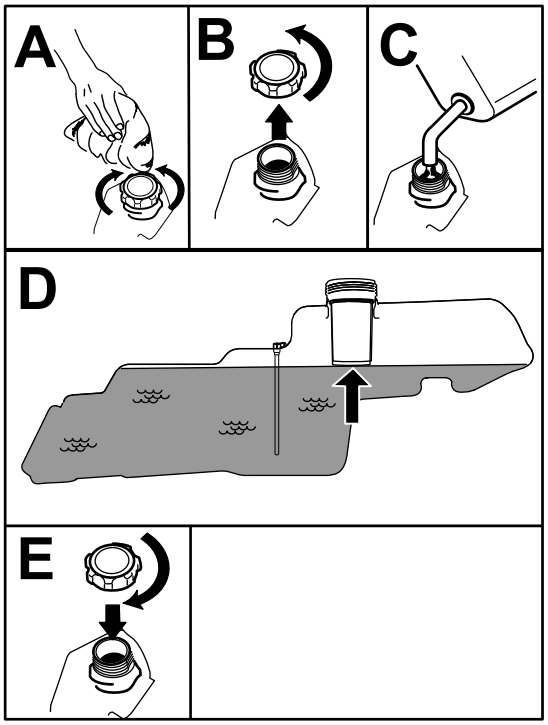


g293796

**Figure 8**

# Performing Daily Maintenance

Before starting the machine each day, perform the Each Use/Daily procedures listed in Maintenance (page 31).

# Breaking in a New Machine

New engines take time to develop full power. Mower decks and drive systems have higher friction when new, placing additional load on the engine. Allow 40 to 50 hours of break-in time for new machines to develop full power and best performance.

# Using the Safety-Interlock System

**⚠ WARNING**

**If the safety-interlock switches are disconnected or damaged, the machine could operate unexpectedly, causing personal injury.**

- **Do not tamper with the interlock switches.**
- **Check the operation of the interlock switches daily and replace any damaged switches before operating the machine.**

## Understanding the Safety-Interlock System

The safety-interlock system is designed to prevent the engine from starting unless:

- The blade-control switch (PTO) is disengaged.
- The motion-control levers are in the PARK position.

The safety-interlock system also is designed to shut off the engine whenever the control levers are out of the PARK position and you rise from the seat.

## Testing the Safety-Interlock System

Test the safety-interlock system before you use the machine each time. If the safety system does not operate as described below, have an Authorized Service Dealer repair the safety system immediately.

1. Sit on the seat, move the motion-control levers in the PARK position, and move the blade-control switch to the ON position. Try starting the engine; the engine should not crank.
2. Sit on the seat and move the blade-control switch to the OFF position. Move either motion-control lever to the center, unlocked position. Try starting the engine; the engine should not crank. Repeat with the other motion-control lever.
3. Sit on the seat, move the blade-control switch to the OFF position, and lock the motion-control levers in the PARK position. Start the engine. While the engine is running, engage the blade-control switch, and rise slightly from the seat; the engine should shut off.
4. Sit on the seat, move the blade-control switch to the OFF position, and lock the motion-control levers in the PARK position. Start the engine. While the engine is running, move the motion-control levers to the center, unlocked position, engage the blade-control switch, and rise slightly from the seat; the engine should shut off.

# Positioning the Seat

The seat can move forward and backward. Position the seat where you have the best control of the machine and are most comfortable (Figure 9).

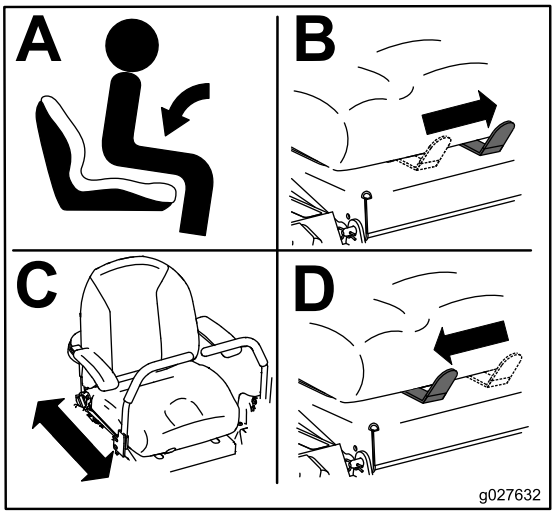


g027632

**Figure 9**

# Adjusting the MyRide™ Suspension System

The MyRide™ suspension system adjusts to provide a smooth and comfortable ride. Position the suspension system where you are most comfortable.

The slots for the suspension adjustment have detent positions for reference.

The following graphic shows the position for a soft or firm ride and the different detent positions (Figure 10).

1. Park the machine on a level surface, disengage the blade-control switch, and move the motion-control levers outward to the PARK position.
2. Shut off the engine, remove the key, and wait for all moving parts to stop before leaving the operating position.
3. Step off the machine.
4. While standing on the right side of the machine, move the adjustment lever left toward the – symbol to decrease the seat suspension.

   Move the adjustment lever right toward the + symbol to increase the seat suspension.

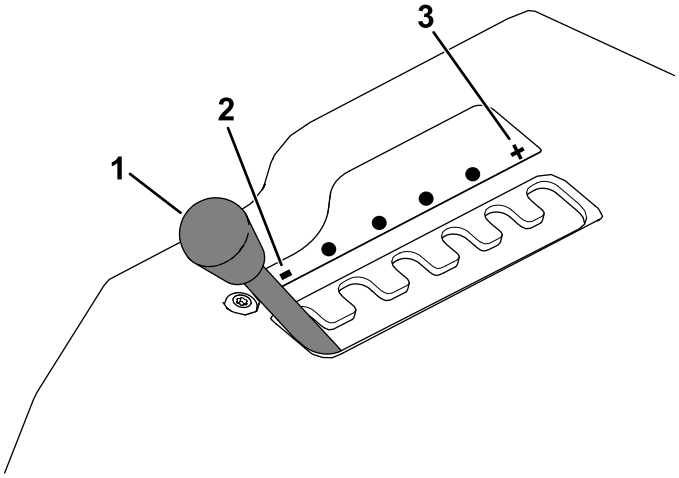


g292102

**Figure 10**

1. MyRide adjustment lever
2. Decrease seat suspension
3. Increase seat suspension

# Adjusting the Motion-Control Levers

## Adjusting the Height

You can adjust the motion-control levers higher or lower for maximum comfort (Figure 11).

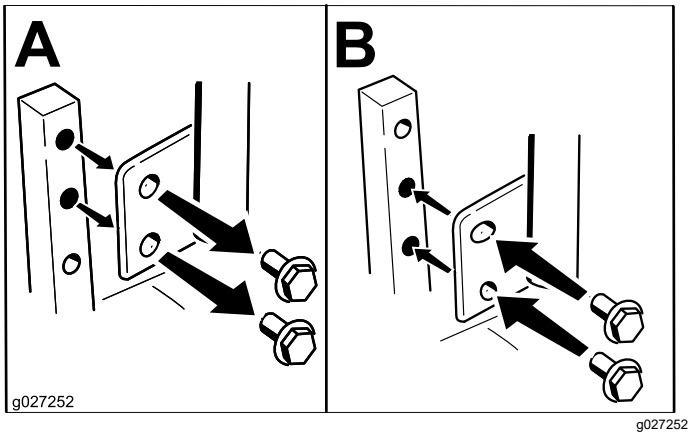


**Figure 11**

## Adjusting the Tilt

You can adjust the motion-control levers forward or rearward for your comfort.

1. Loosen the upper bolt holding the control lever to the control-arm shaft.
2. Loosen the lower bolt just enough to pivot the control lever forward or rearward (Figure 11).
3. Tighten both bolts to secure the control lever in the new position.
4. Repeat the adjustment for the other control lever.

# Converting to Side Discharge

The mower deck and mower blades shipped with the machine were designed for optimum mulching and side-discharge performance.

Install the fasteners from the loose parts bag into the empty holes after removing the recyling baffles.. This ensures that no holes are left open when operating the mower deck.

**⚠ WARNING**

**Open holes in the machine expose you and others to thrown debris that can cause severe injury.**

- **Never operate the machine without hardware mounted in all holes in the machine housing.**
- **Install the hardware in the mounting holes when you remove the mulching baffle.**

## Machines with 107 cm (42-inch) Mower Decks

1. Park the machine on a level surface, disengage the blade-control switch, and move the motion-control levers outward to the PARK position.
2. Shut off the engine, remove the key, and wait for all moving parts to stop before leaving the operating position.
3. Remove the mower deck; refer to Removing the Mower Deck (page 50).
4. Remove the 2 locknuts (5/16 inch) from the welded posts of the baffle (Figure 12).

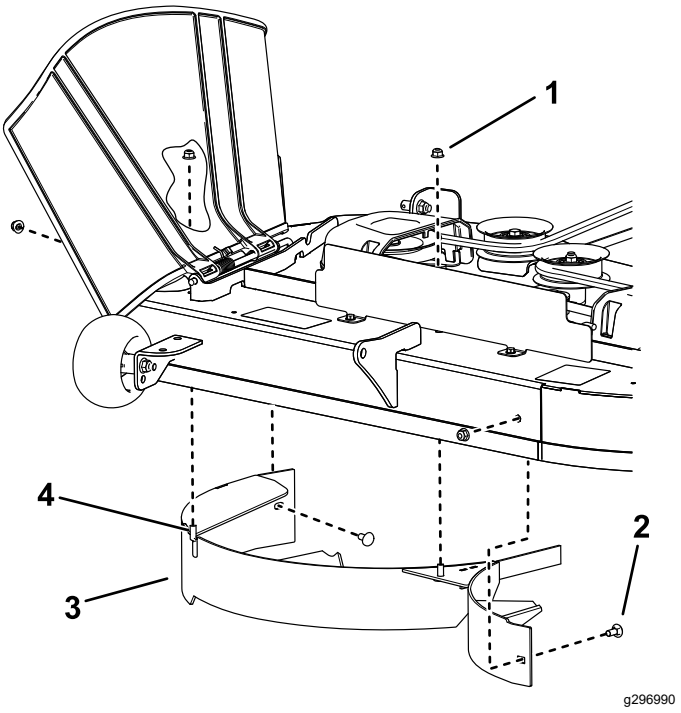


**Figure 12**

1. Locknut—5/16 inch (4)
2. Carriage bolt—5/16 x 3/4 inch (2)
3. Baffle
4. Welded post (2)

5. Remove the 2 carriage bolts and 2 locknuts securing the baffle to the deck and remove the baffle (Figure 12)

6. Locate the 2 bolts in loose parts and use the existing locknuts to install these fasteners into the holes used for the welded posts (Figure 12) to prevent flying debris.

   **Note:** Install the bolt upward, through the underside of the deck and use an existing locknut to secure from the topside.

7. Install the mower deck; refer to Installing the Mower Deck (page 51).

## Machines with 127 cm (50-inch) Mower Decks

1. Park the machine on a level surface, disengage the blade-control switch, and move the motion-control levers outward to the PARK position.
2. Shut off the engine, remove the key, and wait for all moving parts to stop before leaving the operating position.
3. Remove the mower deck; refer to Removing the Mower Deck (page 50).
4. Remove the 3 locknuts (5/16 inch) from the welded posts of the right baffle (Figure 13).

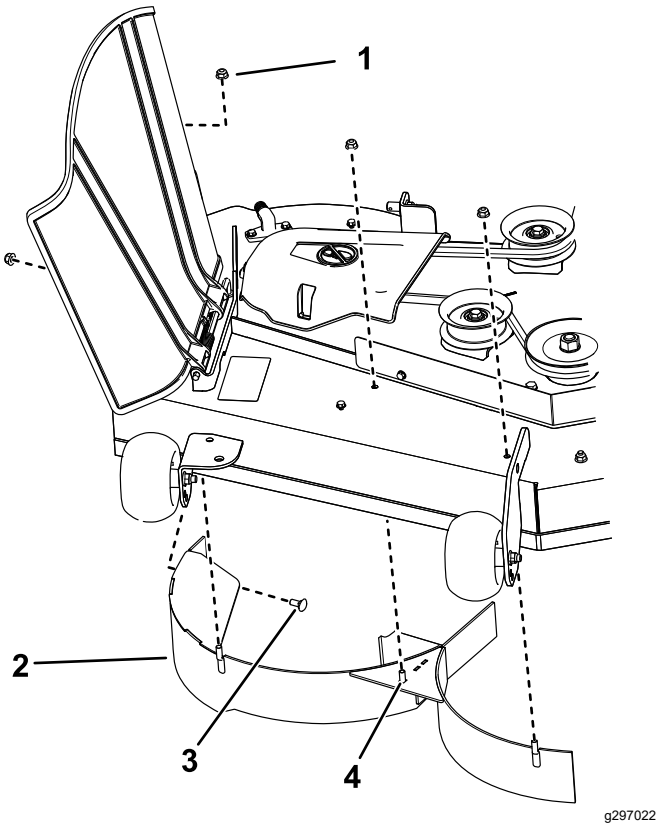


**Figure 13**

1. Locknut—5/16 inch (4)
2. Right baffle
3. Carriage bolt—5/16 x 3/4 inch
4. Welded post (3)

5. Remove the 2 carriage bolts and 2 locknuts securing the right baffle to the deck and remove the baffle (Figure 13).
6. Locate the 3 bolts in loose parts and use the existing locknuts and install these fasteners into the holes used for the welded posts (Figure 13) to prevent flying debris.

   **Note:** Install the bolt upward, through the underside of the deck and use an existing locknut to secure from the topside.

7. Remove the 2 locknuts (5/16 inch) from the welded posts of the left baffle (Figure 14).

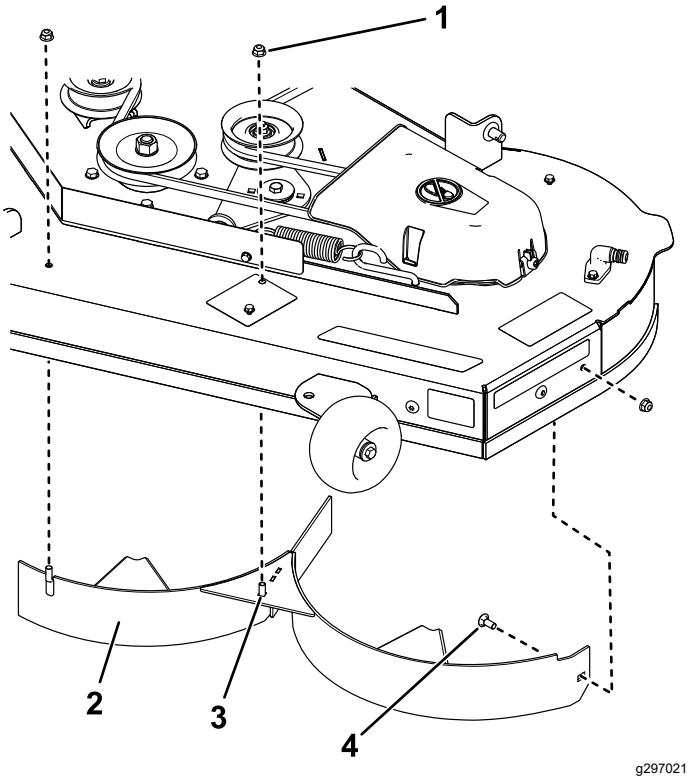


**Figure 14**

1. Locknut—5/16 inch (3)
2. Left baffle
3. Welded post (2)
4. Carriage bolt—5/16 x 3/4 inch

8. Remove the carriage bolt and locknut securing the left baffle to the deck and remove the baffle (Figure 14).
9. Locate the 2 bolts in loose parts and use the existing locknuts and install these fasteners into the holes shown in Figure 14 on the mower deck to prevent flying debris.

   **Note:** Install the bolt upward, through the underside of the deck and use an existing locknut to secure from the topside.

10. Remove the nut from the grass deflector rod under the mower deck (Figure 15).

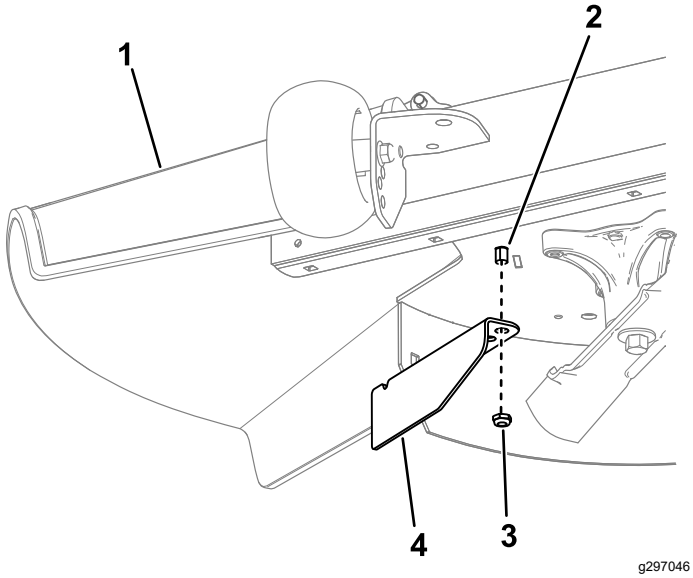


**Figure 15**

1. Grass deflector
2. Grass deflector rod
3. Nut
4. Cutoff baffle

11. Use the nut to install the cutoff baffle to the grass deflector rod, using the outer hole in the baffle (Figure 15).
12. Install the mower deck; refer to Installing the Mower Deck (page 51).

# *During Operation*

## During Operation Safety

### General Safety

The operator must use their full attention when operating the machine. **Do Not** engage in any activity that causes distractions; otherwise, injury or property damage may occur.

**⚠ WARNING**

**Operating engine parts, especially the muffler, become extremely hot. Severe burns can occur on contact and debris, such as leaves, grass, brush, etc. can catch fire.**

- **Allow engine parts, especially the muffler, to cool before touching.**
- **Remove accumulated debris from muffler and engine area.**

**⚠ WARNING**

**Engine exhaust contains carbon monoxide, which is an odorless deadly poison that can kill you.**

**Do Not run engine indoors or in a small confined area where dangerous carbon monoxide fumes can collect.**

- The owner/user can prevent and is responsible for accidents or injuries occurring to himself or herself, other people or property.
- This mower was designed for one operator only. Do not carry passengers and keep all others away from machine during operation.
- Do Not operate the machine under the influence of alcohol or drugs.
- Operate only in daylight or good artificial light.
- Lightning can cause severe injury or death. If lightning is seen or thunder is heard in the area, Do Not operate the machine; seek shelter.
- Use extra care while operating with accessories or attachments, such as grass collection systems. These can change the stability of the machine and cause a loss of control. Follow directions for counter weights if required.
- Keep away from holes, ruts, bumps, rocks, and other hidden hazards. Use care when approaching blind corners, shrubs, trees, tall grass or other objects that may hide obstacles or obscure vision. Uneven terrain could overturn the machine or cause the operator to lose their balance or footing.

- Be sure all drives are in neutral and parking brake is engaged before starting engine.
- Start the engine carefully according to instructions with feet well away from the blades.
- Never operate the mower with damaged guards, shields, or covers. Always have safety shields, guards, switches and other devices in place and in proper working condition.
- Keep clear of the discharge opening at all times. Never mow with the discharge door raised, removed or altered unless there is a grass collection system or mulch kit in place and working properly.
- Keep hands and feet away from moving parts. If possible, Do Not make adjustments with the engine running.

**⚠ WARNING**

**Hands, feet, hair, clothing, or accessories can become entangled in rotating parts. Contact with the rotating parts can cause traumatic amputation or severe lacerations.**

- **Do Not operate the machine without guards, shields, and safety devices in place and working properly.**
- **Keep hands, feet, hair, jewelry, or clothing away from rotating parts.**

- Never raise the deck with blades running.
- Be aware of the mower discharge path and direct discharge away from others. Avoid discharging material against a wall or obstruction as the material may ricochet back toward the operator. Stop the blades, slow down, and use caution when crossing surfaces other than grass and when transporting the mower to and from the area to be mowed.
- Be alert, slow down and use caution when making turns. Look behind and to the side before changing directions. Do Not mow in reverse unless absolutely necessary.
- Do Not change the engine governor setting or overspeed the engine.
- Park the machine on level ground. Stop engine, wait for all moving parts to stop, and remove the spark plug wire(s).
  - Before checking, cleaning or working on the mower.
  - After striking a foreign object or abnormal vibration occurs (inspect the mower for damage and make repairs before restarting and operating the mower).
  - Before clearing blockages.
  - Whenever you leave the mower. Do Not leave a running machine unattended.
- Stop engine, wait for all moving parts to stop:
  - Before refueling.
  - Before dumping the grass catcher.
  - Before making height adjustments.
- Tragic accidents can occur if the operator is not alert to the presence of children. Children are often attracted to the machine and the mowing activity. Never assume that children will remain where you last saw them.
  - Keep children out of the mowing area and under the watchful care of another responsible adult, not the operator.
  - Be alert and turn the machine off if children enter the area.
  - Before and while backing or changing direction, look behind, down, and side-to-side for small children.
  - Never allow children to operate the machine.
  - Do Not carry children, even with the blades shut off. Children could fall off and be seriously injured or interfere with the safe operation of the machine. Children that have been given rides in the past could suddenly appear in the working area for another ride and be run over or backed over by the machine.

## Slope Safety

- Slopes are a major factor related to loss of control and rollover accidents, which can result in severe injury or death. The operator is responsible for safe slope operation. Operating the machine on any slope requires extra caution. Before using the machine on a slope, the operator must:
  - Review and understand the slope instructions in the manual and on the machine.
  - Use an angle indicator to determine the approximate slope angle of the area.
  - Never operate on slopes greater than 15 degrees.
  - Evaluate the site conditions of the day to determine if the slope is safe for machine operation. Use common sense and good judgment when performing this evaluation. Changes in the terrain, such as moisture, can quickly affect the operation of the machine on a slope.
- Identify hazards at the base of the slope. Do Not operate the machine near drop offs, ditches, embankments, water or other hazards. The machine could suddenly roll over if a wheel goes over the edge or the edge collapses. Keep a safe

distance (twice the width of the machine) between the machine and any hazard. Use a walk behind machine or a hand trimmer to mow the grass in these areas.

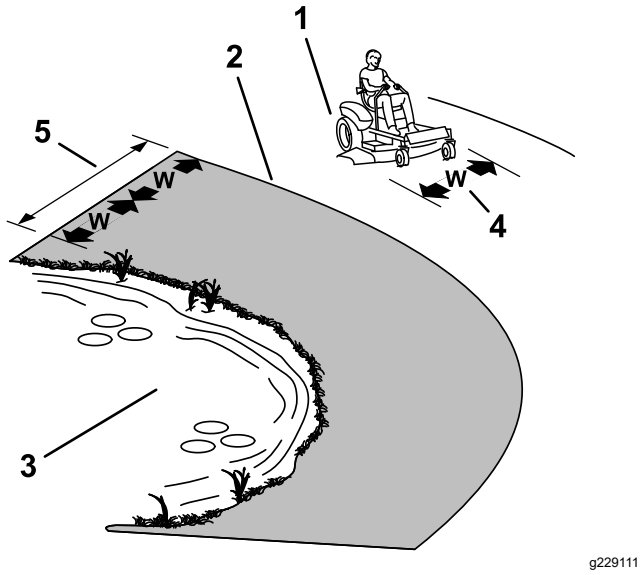


**Figure 16**

1. Safe Zone-Use the mower here on slopes less than 15 degrees
2. Danger Zone-Use a walk-behind mower and/or hand trimmer on slopes greater than 15 degrees
3. Water
4. W=width of the machine
5. Keep a safe distance (twice the width of the machine) between the machine and any hazard.

- Avoid starting, stopping or turning the machine on slopes. Avoid making sudden changes in speed or direction; turn slowly and gradually.
- Do Not operate a machine under any conditions where traction, steering or stability is in question. Be aware that operating the machine on wet grass, across slopes or downhill may cause the machine to lose traction. Loss of traction to the drive wheels may result in sliding and a loss of braking and steering. The machine can slide even if the drive wheels are stopped.
- Remove or mark obstacles such as ditches, holes, ruts, bumps, rocks or other hidden hazards. Tall grass can hide obstacles. Uneven terrain could overturn the machine.
- Use extra care while operating with accessories or attachments, such as grass collection systems. These can change the stability of the machine and cause a loss of control. Follow directions for counter weights.
- If possible, keep the deck lowered to the ground while operating on slopes. Raising the deck while operating on slopes can cause the machine to become unstable.

## Towing Safety

- Do not attach towed equipment except at the hitch point.
- Do not use the machine as a towing vehicle unless it has a hitch installed.
- Do not exceed the weight limits for towed equipment and towing on slopes. The towed weight must not exceed the weight of the machine and operator.
- Never allow children or others near the towed equipment.
- On slopes, the weight of the towed equipment may cause loss of traction, increased risk of rollover, and loss of control. Reduce the towed weight and slow down.
- The stopping distance may increase with the weight of a towed load. Travel slowly and allow extra distance to stop.
- Make wide turns to keep the attachment clear of the machine.

# Operating the Mower Blade-Control Switch (PTO)

The blade-control switch (PTO) starts and stops the mower blades and any powered attachments.

## Engaging the Blade-Control Switch (PTO)

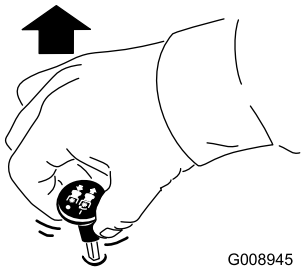


g008945

**Figure 17**

**Note:** Always engage the blades with the throttle in the FAST position (Figure 18).

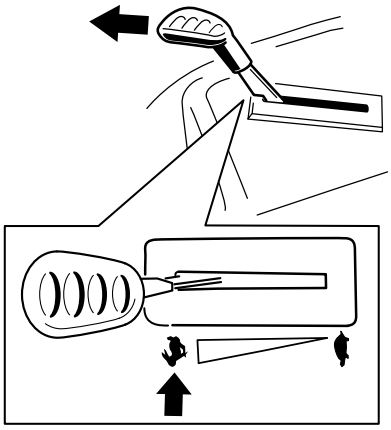

g295538

**Figure 18**

## Disengaging the Blade-Control Switch (PTO)

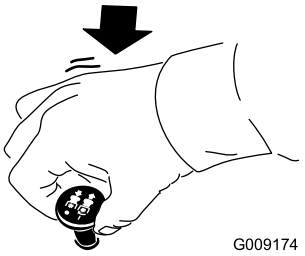


g009174

**Figure 19**

# Operating the Throttle

You can move the throttle control between the FAST and SLOW positions (Figure 20).

Always use the FAST position when engaging the PTO.

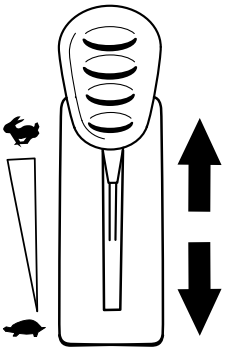

g295539

**Figure 20**

# Operating the Choke

Use the choke to start a cold engine.

1. Pull up the choke knob to engage the choke before using the key switch (Figure 21).

   **Note:** Ensure that you fully engage the choke. You may need to hold the knob up when you use the key switch.

2. Push down the choke to disengage the choke after the engine has started (Figure 21).

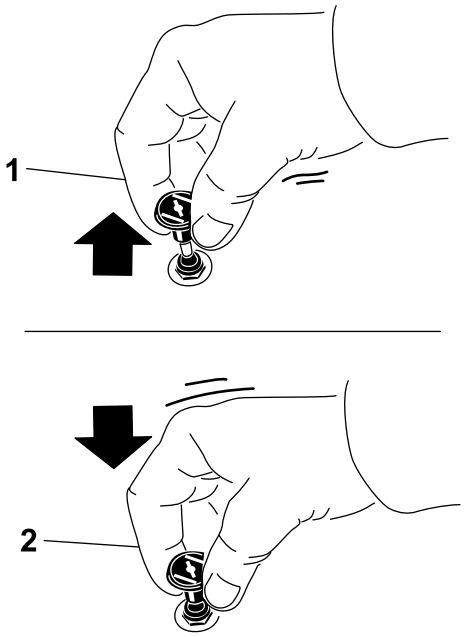


g295540

**Figure 21**

1. ON position
2. OFF position

# Starting the Engine

**Note:** A warm or hot engine may not require choking.

***Important:*** **Do not engage the starter for more than 5 seconds at a time. Engaging the starter motor for more than 5 seconds can damage the starter motor. If the engine fails to start, wait 10 seconds before operating the engine starter again.**

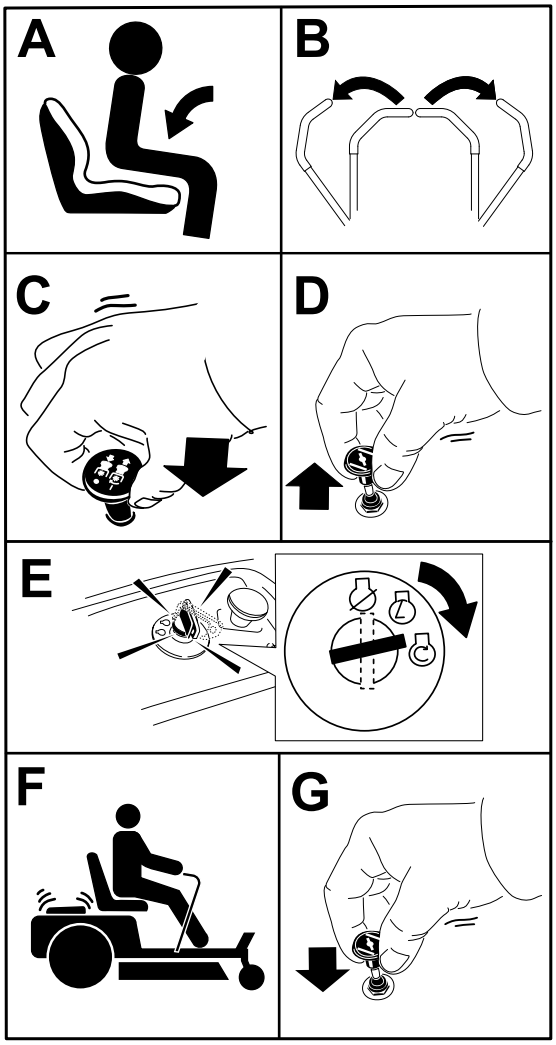


g295541

**Figure 22**

# Shutting Off the Engine

1. Disengage the blades by moving the blade-control switch to the OFF position (Figure 19).
2. Move the motion-control levers outward to the PARK position.
3. Move the throttle control to the FAST position.
4. Turn the key to the OFF position and remove the key.

**⚠ CAUTION**

**Children or bystanders may be injured if they move or attempt to operate the machine while it is unattended.**

**Always remove the key and engage the parking brake when leaving the machine unattended.**

# Using the Motion-Control Levers

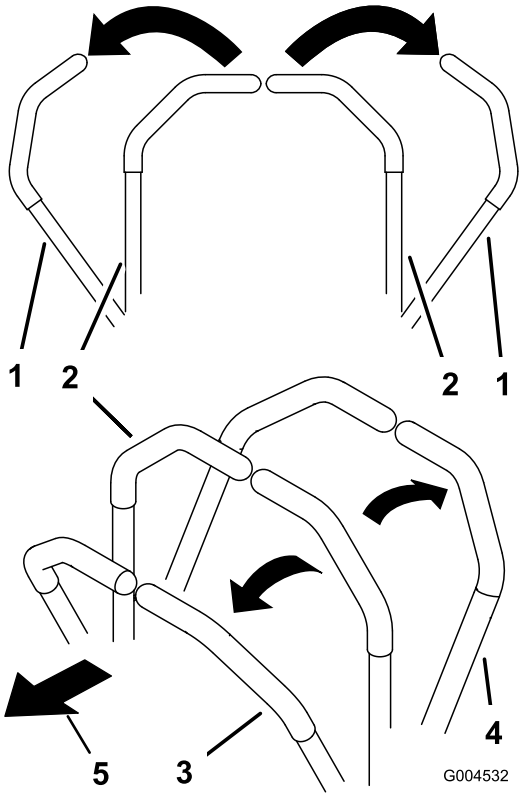


g004532

**Figure 23**

1. Motion-control lever—PARK position
2. Center, unlocked position
3. Forward
4. Backward
5. Front of machine

# Driving the Machine

The drive wheels turn independently, powered by hydraulic motors on each axle. You can turn 1 side in reverse while you turn the other forward, causing the machine to spin rather than turn. This greatly improves the machine maneuverability but may require sometime for you to adapt to how it moves.

The throttle control regulates the engine speed as measured in rpm (revolutions per minute). Place the throttle control in the FAST position for best performance. Always operate in the full throttle position when mowing.

**⚠ WARNING**

**The machine can spin very rapidly. You may lose control of the machine and cause personal injury or damage to the machine.**

- **Use caution when making turns.**
- **Slow the machine down before making sharp turns.**

## Driving Forward

**Note:** Always use caution when backing up and turning.

1. Move the levers to the center, unlocked position.
2. To go forward, slowly push the motion-control levers forward (Figure 24).

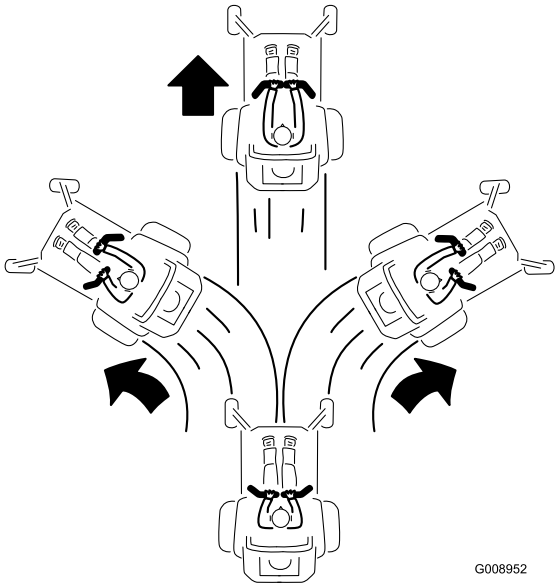


**Figure 24**

## Driving Backward

1. Move the levers to the center, unlocked position.
2. To go backward, slowly pull the motion-control levers rearward (Figure 25).

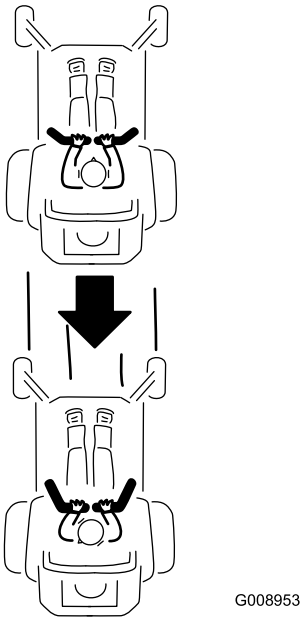


**Figure 25**

# Using the Smart Speed™ Control System

The Smart Speed ™ Control-System lever, located below the operating position (Figure 26), gives the operator a choice to drive the machine at 3 ground speed ranges—trim, tow, and mow.

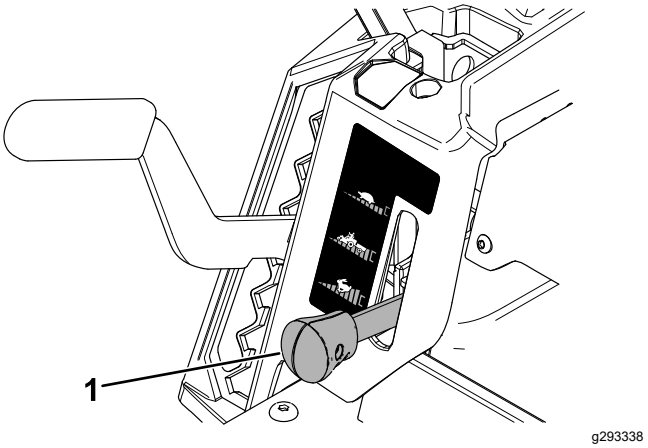


**Figure 26**

1. Smart-speed lever

To change speeds, do the following:

1. Move the motion-control levers to neutral and outward to the PARK position.

2. Disengage the blade-control switch.
3. Adjust the lever to the desired position.

The following are only recommendations for use. Adjustments vary by grass type, moisture content, and the height of the grass.

| Suggested uses: | Trim | Tow | Mow |
|---|---|---|---|
| Parking | X | | |
| Heavy, wet grass | X | | |
| Training | X | | |
| Trimming grass | X | | |
| Bagging | | X | |
| Mulching | | X | |
| Towing attachments | | X | |
| Normal mowing | | | X |
| Moving the machine | | | X |

**Trim**

This is the lowest speed. The suggested uses for this speed are as follows:

- Parking
- Heavy, wet grass mowing conditions
- Training
- Trimming grass

**Tow**

This is the medium speed. The suggested uses for this speed are as follows:

- Bagging
- Mulching
- Towing attachments

**Mow**

This is the fastest speed. The suggested uses for this speed are as follows:

- Normal mowing
- Moving the machine

# Using the Side Discharge

The mower has a hinged grass deflector that disperses clippings to the side and down toward the turf.

**⚠ DANGER**

**Without a grass deflector, discharge cover, or a complete grass-catcher assembly mounted in place, you and others are exposed to blade contact and thrown debris. Contact with rotating mower blade(s) and thrown debris will cause injury or death.**

- **Never remove the grass deflector from the mower deck because the grass deflector routes material down toward the turf. If the grass deflector is ever damaged, replace it immediately.**
- **Never put your hands or feet under the mower deck.**
- **Never try to clear the discharge area or mower blades unless you move the blade-control switch (PTO) to the OFF position, rotate the key switch to the OFF position, and remove the key from the key switch.**
- **Make sure that the grass deflector is in the down position.**

# Adjusting the Height of Cut

**Note:** The transport position is the highest height-of-cut position or cutting height at 115 mm (4-1/2 inches) as shown in Figure 27.

Height of cut is controlled by the lever located to the right of the operating position (Figure 27).

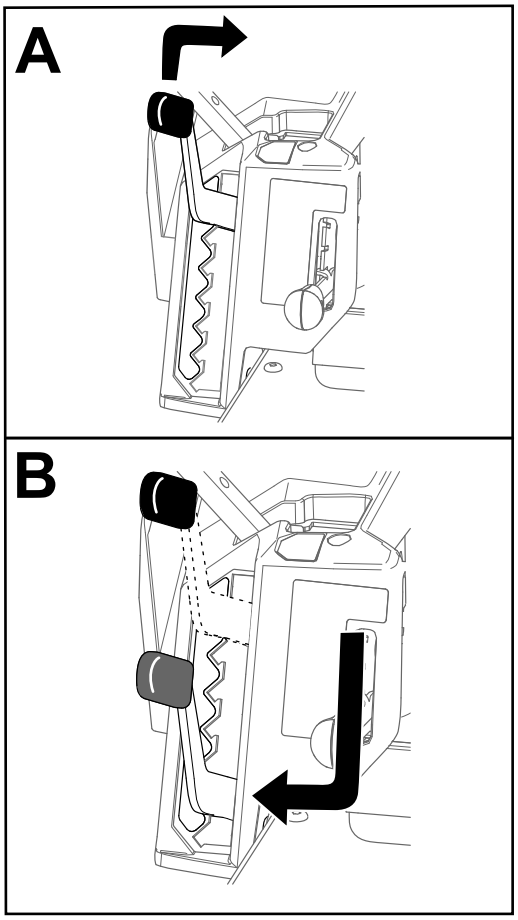


g296586

**Figure 27**

# Adjusting the Anti-Scalp Rollers

## Machines with 107 cm (42-inch) Mower Decks

Whenever you change the height of cut, adjust the height of the anti-scalp rollers.

**Note:** Adjust the anti-scalp rollers so that the rollers do not touch the ground in normal, flat mowing areas.

1. Park the machine on a level surface, disengage the blade-control switch, and move the motion-control levers outward to the PARK position.
2. Shut off the engine, remove the key, and wait for all moving parts to stop before leaving the operating position.
3. Adjust the anti-scalp rollers to 1 of the following positions:
   - Upper hole—use this position with the mower deck in the 63 mm (2-1/2 inches) and below the height-of-cut positions (Figure 28).
   - Lower hole—use this position with the mower deck in the 76 mm (3 inches) and above the height-of-cut positions (Figure 28).

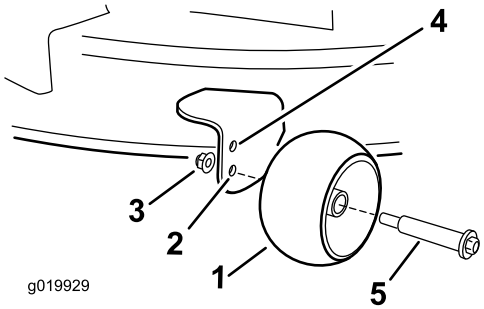


g019929

g019929

**Figure 28**

1. Anti-scalp roller
2. Lower hole—the mower deck in the 76 mm (3 inches) and above the height-of-cut positions
3. Flange nut
4. Upper hole—the mower deck in the 63 mm (2-1/2 inches) and below the height-of-cut positions
5. Bolt

## Machines with 127 cm (50-inch) Mower Decks

Whenever you change the height of cut, adjust the height of the anti-scalp rollers.

**Note:** Adjust the anti-scalp rollers so that the rollers do not touch the ground in normal, flat mowing areas.

1. Park the machine on a level surface, disengage the blade-control switch, and move the motion-control levers outward to the PARK position.
2. Shut off the engine, remove the key, and wait for all moving parts to stop before leaving the operating position.
3. Adjust the anti-scalp rollers (Figure 29) to match the closest height-of-cut position.

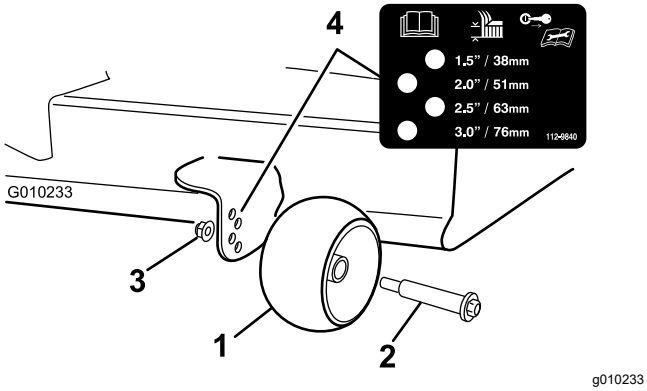


**Figure 29**

1. Anti-scalp roller
2. Bolt
3. Flange nut
4. Hole spacing

# Operating Tips

## Using the Fast Throttle Setting

For best mowing and maximum air circulation, operate the engine at the FAST position. Air is required to thoroughly cut grass clippings, so do not set the height-of-cut so low as to totally surround the mower deck in uncut grass. Always try to have 1 side of the mower deck free from uncut grass, which allows air to be drawn into the mower deck.

## Cutting a Lawn for the First Time

Cut grass slightly longer than normal to ensure that the cutting height of the mower deck does not scalp any uneven ground. However, the cutting height used in the past is generally the best one to use. When cutting grass longer than 15 cm (6 inches) tall, you may want to cut the lawn twice to ensure an acceptable quality of cut.

## Cutting a Third of the Grass Blade

It is best to cut only about a third of the grass blade. Cutting more than that is not recommended unless grass is sparse, or it is late fall when grass grows more slowly.

## Alternating the Mowing Direction

Alternate the mowing direction to keep the grass standing straight. This also helps disperse clippings, which enhances decomposition and fertilization.

## Mowing at Correct Intervals

Grass grows at different rates at different times of the year. To maintain the same cutting height, mow more often in early spring. As the grass growth rate slows in mid summer, mow less frequently. If you cannot mow for an extended period, first mow at a high cutting height, then mow again 2 days later at a lower height setting.

## Using a Slower Cutting Speed

To improve cut quality, use a slower ground speed in certain conditions.

## Avoiding Cutting Too Low

When mowing uneven turf, raise the cutting height to avoid scalping the turf.

## Stopping the Machine

If you must stop the forward motion of the machine while mowing, a clump of grass clippings may drop onto your lawn. To avoid this, move onto a previously cut area with the blades engaged or you can disengage the mower deck while moving forward.

## Keeping the Underside of the Mower Deck Clean

Clean clippings and dirt from the underside of the mower deck after each use. If grass and dirt build up inside the mower deck, cutting quality will eventually become unsatisfactory.

## Maintaining the Blade(s)

Maintain a sharp blade throughout the cutting season because a sharp blade cuts cleanly without tearing or shredding the grass blades. Tearing and shredding turns grass brown at the edges, which slows growth and increases the chance of disease. Check the mower blades after each use for sharpness, and for any wear or damage. File down any nicks and sharpen the blades as necessary. If a blade is damaged or worn, replace it immediately with a genuine Toro replacement blade.

# After Operation

# After Operation Safety

## General Safety

- Park machine on level ground, disengage drives, set parking brake, stop engine, remove key or disconnect spark plug wire. Wait for all movement to stop and allow the machine to cool before adjusting, cleaning, repairing, or storing. Never allow untrained personnel to service machine.
- Clean the machine as stated in the Maintenance section. Keep engine and engine area free from accumulation of grass, leaves, excessive grease or oil, and other debris which can accumulate in these areas. These materials can become combustible and may result in a fire.
- Frequently check for worn or deteriorating components that could create a hazard. Tighten loose hardware.

## Transporting

### Transporting the Machine

Use a heavy-duty trailer or truck to transport the machine. Ensure that the trailer or truck has all necessary lighting and marking as required by law. Thoroughly read all of the safety instructions. Knowing this information could help you, your family, pets, or bystanders avoid injury.

To transport the machine:

- Lock the brake and block the wheels.
- Securely fasten the machine to the trailer or truck with straps, chains, cable, or ropes. Only use the designated tie-down locations on the mower as shown in Figure 30. Use these locations even when transporting the mower with an attached accessory. Using non-designated locations may cause damage to the mower and/or attachment.

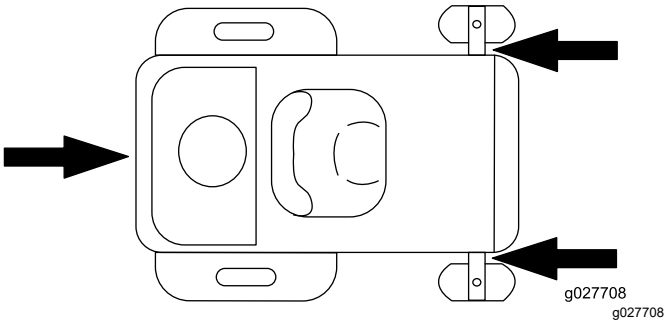


**Figure 30**

- Secure a trailer to the towing vehicle with safety chains.

**⚠ WARNING**

**Driving on the street or roadway without turn signals, lights, reflective markings, or a slow moving vehicle emblem is dangerous and can lead to accidents causing personal injury.**

**Do not drive machine on a public street or roadway.**

### Loading the Machine

Use extreme caution when loading or unloading machines onto a trailer or a truck. Use a full-width ramp that is wider than the machine for this procedure. Back up ramps and drive forward down ramps (Figure 31).

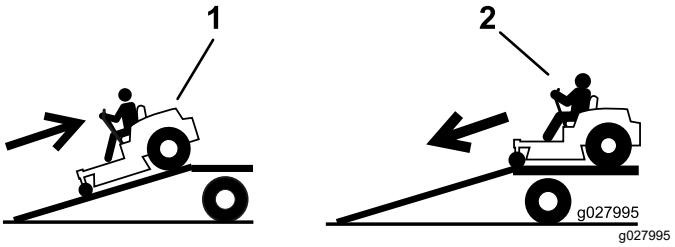


**Figure 31**

1. Back up ramps
2. Drive forward down ramps

***Important:*** **Do not use narrow individual ramps for each side of the machine.**

Ensure the ramp is long enough so that the angle with the ground does not exceed 15 degrees (Figure 31). On flat ground, this requires a ramp to be at least four times (4X) as long as the height of the trailer or truck bed to the ground. A steeper angle may cause mower components to get caught as the unit moves from the ramp to the trailer or truck. Steeper angles may also cause the machine to tip or lose control. If loading on or near a slope, position the trailer or truck so that it is on the down side of the slope and the ramp extends up the slope. This will minimize the ramp angle.

**⚠ WARNING**

**Loading a machine onto a trailer or truck increases the possibility of tip-over and could cause serious injury or death.**

- **Use extreme caution when operating a machine on a ramp.**
- **Use only a full-width ramp; do not use individual ramps for each side of the machine.**
- **Do not exceed a 15-degree angle between the ramp and the ground or between the ramp and the trailer or truck.**
- **Ensure the length of ramp is at least four times (4X) as long as the height of the trailer or truck bed to the ground. This will ensure that ramp angle does not exceed 15 degrees on flat ground.**
- **Back up ramps and drive forward down ramps.**
- **Avoid sudden acceleration or deceleration while driving the machine on a ramp as this could cause a loss of control or a tip-over situation.**

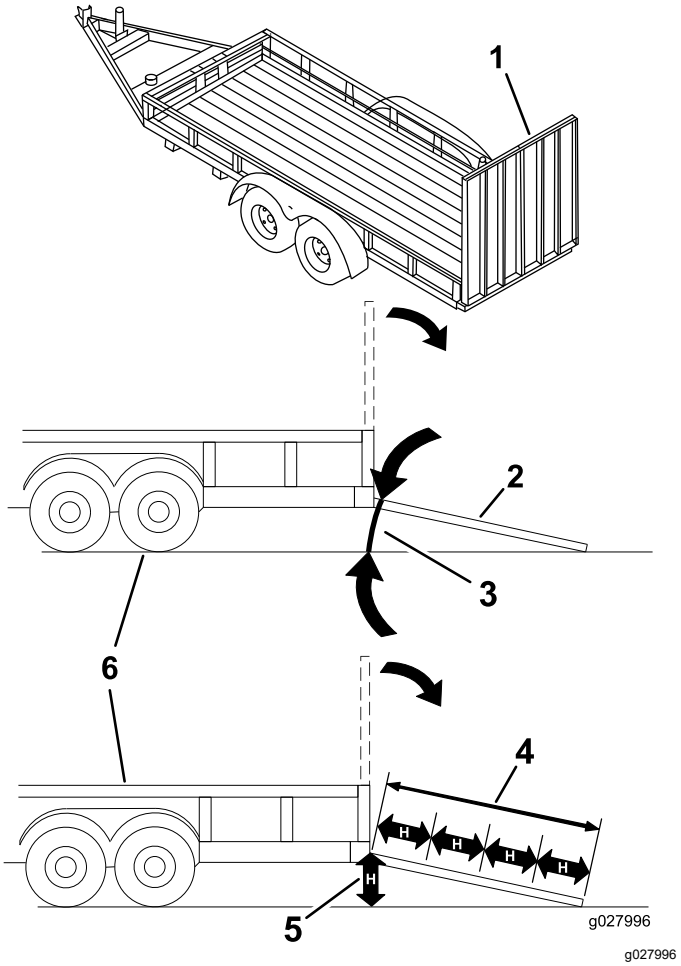


**Figure 32**

1. Full-width ramp in stowed position
2. Side view of full-width ramp in loading position
3. Not greater than 15 degrees
4. Ramp is at least four times (4X) as long as the height of the trailer or truck bed to the ground
5. H= height of the trailer or truck bed to the ground
6. Trailer

# Pushing the Machine by Hand

***Important:*** **Always push the machine by hand. Do not tow the machine, because towing may damage it.**

This machine has an electric-brake mechanism, and to push the machine, the key must be in the RUN position. The battery needs to be charged and functioning to disengage the electric brake.

## Pushing the Machine

1. Park the machine on a level surface, disengage the blade-control switch, and move the motion-control levers outward to the PARK position.
2. Shut off the engine, remove the key, and wait for all moving parts to stop before leaving the operating position.
3. Locate the bypass levers on the frame on both sides of the engine.
4. Move the bypass levers forward through the key hole and down to lock them in place (Figure 33).

   **Note:** Do this for each lever.

   **⚠ WARNING**

   **Contact with hot surfaces may cause personal injury.**

   **Keep your hands, feet, face, clothing and other body parts away the engine, muffler and other hot surfaces.**

5. Turn the ignition key on and disengage the parking brake by moving 1 motion-control lever out of the PARK position.

   **Note:** Do not start the machine.

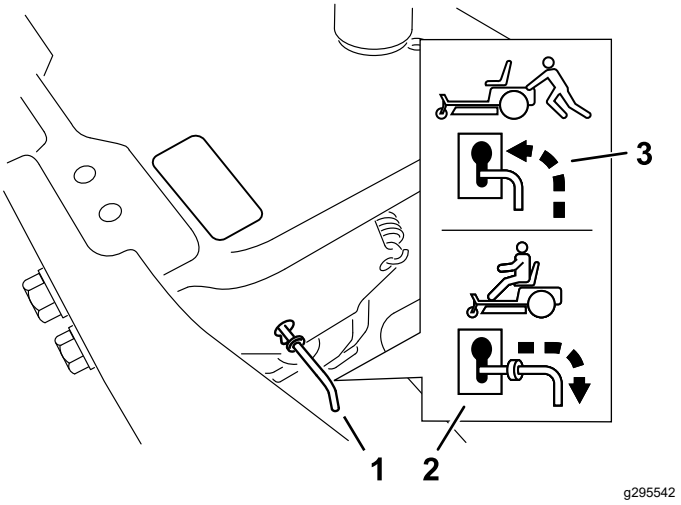


**Figure 33**

1. Bypass-lever locations
2. Lever position for operating the machine
3. Lever position for pushing the machine

6. When finished, ensure that the key has been returned to the STOP position to avoid draining the battery charge.

## Operating the Machine

Move the bypass levers rearward through the keyhole and down to lock them in place as shown in Figure 33.

**Note:** Do this for each lever.

# Maintenance

**Note:** Determine the left and right sides of the machine from the normal operating position.

## Recommended Maintenance Schedule(s)

| Maintenance Service Interval | Maintenance Procedure |
|---|---|
| After the first 5 hours | • Change the engine oil and filter. |
| Before each use or daily | • Check the safety-interlock system.<br>• Check the air cleaner for dirty, loose, or damaged parts.<br>• Check the engine-oil level.<br>• Clean the air intake screen.<br>• Inspect the blades.<br>• Inspect the grass deflector for damage. |
| After each use | • Clean the mower-deck housing. |
| Every 25 hours | • Grease the caster wheel bearings.<br>• Clean the air-cleaner foam element (more often in dusty, dirty conditions).<br>• Check tire pressure.<br>• Check the belts for wear or cracks. |
| Every 100 hours or yearly, whichever comes first | • Replace the air-cleaner foam element (more often in dusty, dirty conditions).<br>• Replace the paper air-cleaner element (more often in dirty or dusty conditions).<br>• Change the engine oil and oil filter (more often in dirty or dusty conditions).<br>• Check the spark plug(s).<br>• Check the in-line fuel filter. |
| Every 200 hours | • Replace the spark plug(s).<br>• Replace the in-line fuel filter. |
| Every 300 hours | • Check and adjust the valve clearance. Contact an Authorized Service Dealer. |
| Before storage | • Charge the battery and disconnect the battery cables.<br>• Perform all maintenance procedures listed above before storage.<br>• Paint any chipped surfaces. |

**⚠ CAUTION**

**If you leave the key in the switch, someone could accidently start the engine and seriously injure you or other bystanders.**

**Shut off the engine and remove the key from the switch before you perform any maintenance.**

## Maintenance Safety

**⚠ WARNING**

**While maintenance or adjustments are being made, someone could start the engine. Accidental starting of the engine could seriously injure you or other bystanders.**

**Remove the key from the ignition switch, engage parking brake, and pull the wire(s) off the spark plug(s) before you do any maintenance. Also push the wire(s) aside so it does not accidentally contact the spark plug(s).**

**⚠ WARNING**

**The engine can become very hot. Touching a hot engine can cause severe burns.**

**Allow the engine to cool completely before service or making repairs around the engine area.**

- Park machine on level ground, disengage drives, set parking brake, stop engine, remove key or disconnect spark plug wire. Wait for all movement to stop and allow the machine to cool before adjusting, cleaning or repairing. Never allow untrained personnel to service machine.
- Disconnect battery or remove spark plug wire before making any repairs. Disconnect the negative terminal first and the positive last. Reconnect positive first and negative last.
- Keep the machine, guards, shields and all safety devices in place and in safe working condition. Frequently check for worn or deteriorating components and replace them with the manufacturer's recommended parts when necessary.

**⚠ WARNING**

**Removal or modification of original equipment, parts and/or accessories may alter the warranty, controllability, and safety of the machine. Unauthorized modifications to the original equipment or failure to use original Toro parts could lead to serious injury or death. Unauthorized changes to the machine, engine, fuel or venting system, may violate applicable safety standards such as: ANSI, OSHA and NFPA and/or government regulations such as EPA and CARB.**

- Use care when checking blades. Wrap the blade(s) or wear gloves, and use caution when servicing them. Only replace damaged blades. Never straighten or weld them.
- Use jack stands to support the machine and/or components when required.

**⚠ CAUTION**

**Raising the machine for service or maintenance relying solely on mechanical or hydraulic jacks could be dangerous. The mechanical or hydraulic jacks may not be enough support or may malfunction allowing the machine to fall, which could cause injury.**

**Do not rely solely on mechanical or hydraulic jacks for support. Use adequate jack stands or equivalent support.**

- Carefully release pressure from components with stored energy.
- Keep hands and feet away from moving parts. If possible, Do Not make adjustments with the engine running. If the maintenance or adjustment procedure require the engine to be running and components moving, use extreme caution.

**⚠ WARNING**

**Contact with moving parts or hot surfaces may cause personal injury.**

**Keep your fingers, hands, and clothing clear of rotating components and hot surfaces.**

- Check all bolts frequently to maintain proper tightness.

# Pre-Maintenance Procedures

## Releasing the Mower-Deck Curtain

Loosen the 2 bottom bolts of the curtain to access the top of the mower deck (Figure 34).

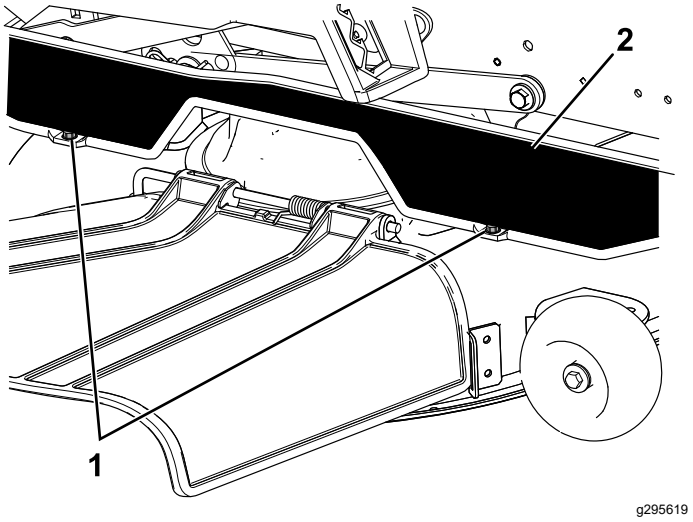


**Figure 34**

1. Bottom bolt
2. Curtain

**Note:** Always tighten the bolts to connect the curtain after maintenance.

# Lubrication

## Greasing the Bearings

**Service Interval:** Every 25 hours—Grease the caster wheel bearings.

**Grease Type:** No. 2 lithium grease

1. Park the machine on a level surface, disengage the blade-control switch, and move the motion-control levers outward to the PARK position.
2. Shut off the engine, remove the key, and wait for all moving parts to stop before leaving the operating position.
3. Clean the grease fittings (Figure 35) with a rag.

   **Note:** Scrape any paint off the front of the fitting(s).

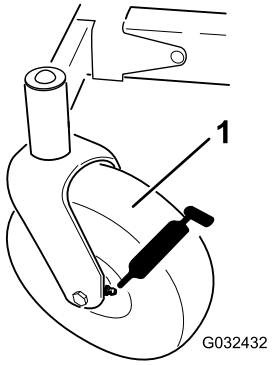


**Figure 35**

1. Front caster tire

4. Connect a grease gun to each fitting (Figure 35).
5. Pump grease into the fittings until grease begins to ooze out of the bearings.
6. Wipe up any excess grease.

# Engine Maintenance

## Engine Safety

- Shut off the engine before checking the oil or adding oil to the crankcase.
- Keep your hands, feet, face, clothing, and other body parts away the muffler and other hot surfaces.

## Servicing the Air Cleaner

**Service Interval:** Before each use or daily

**Note:** Service the air cleaner more frequently (every few hours) if operating conditions are extremely dusty or sandy.

### Removing the Foam and Paper Elements

1. Park the machine on a level surface, disengage the blade-control switch, and move the motion-control levers outward to the PARK position.
2. Shut off the engine, remove the key, and wait for all moving parts to stop before leaving the operating position.
3. Clean around the air-cleaner cover to prevent dirt from getting into the engine and causing damage.
4. Lift the cover and rotate the air-cleaner assembly out of the engine (Figure 36).

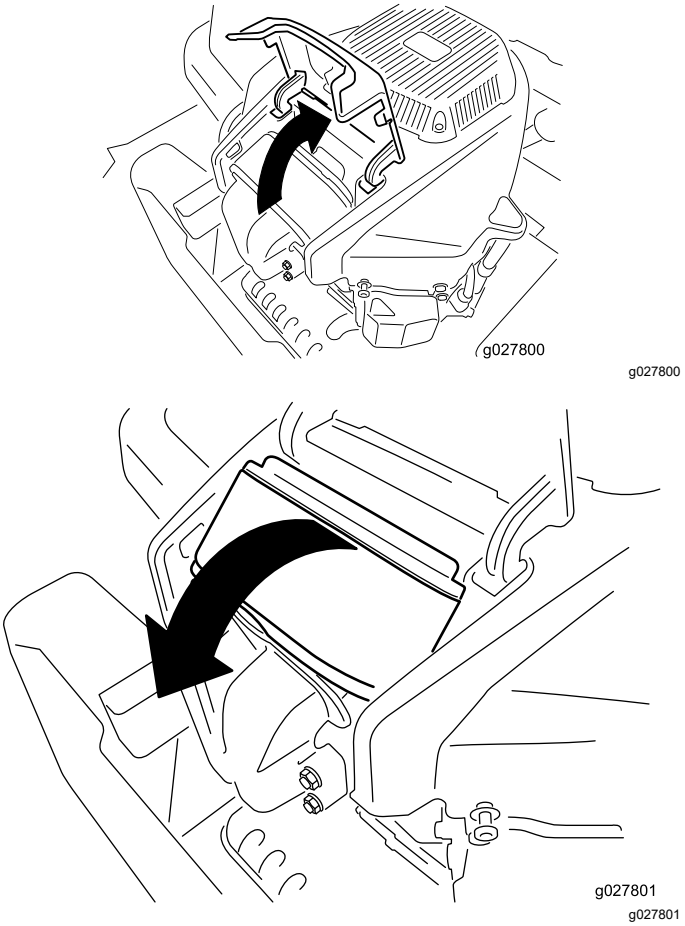


**Figure 36**

5. Separate the foam and paper elements (Figure 37).

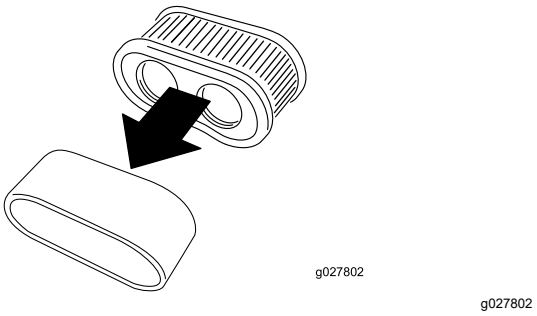


**Figure 37**

## Servicing the Foam Air-Cleaner Element

**Service Interval:** Every 25 hours/Monthly (whichever comes first)—Clean the air-cleaner foam element (more often in dusty, dirty conditions).

Every 100 hours or yearly, whichever comes first—Replace the air-cleaner foam element (more often in dusty, dirty conditions).

1. Wash the foam element in liquid soap and warm water. When the element is clean, rinse it thoroughly.
2. Dry the element by squeezing it in a clean cloth.

   ***Important:*** **Replace the foam element if it is torn or worn.**

## Servicing the Paper Air-Cleaner Element

**Service Interval:** Every 100 hours or yearly, whichever comes first—Replace the paper air-cleaner element (more often in dirty or dusty conditions).

1. Clean the paper element by tapping it gently to remove dust.

   **Note:** If it is very dirty, replace the paper element with a new one.
2. Inspect the element for tears, an oily film, or damage to the rubber seal.
3. Replace the paper element if it is damaged.

   ***Important:*** **Do not clean the paper filter.**

## Installing the Air Cleaner

1. Install the foam element over the paper element.

   **Note:** Ensure that you do not damage the elements.
2. Align the holes of the filter into the manifold ports.
3. Rotate the filter down into the chamber and fully seat it against the manifold (Figure 38).

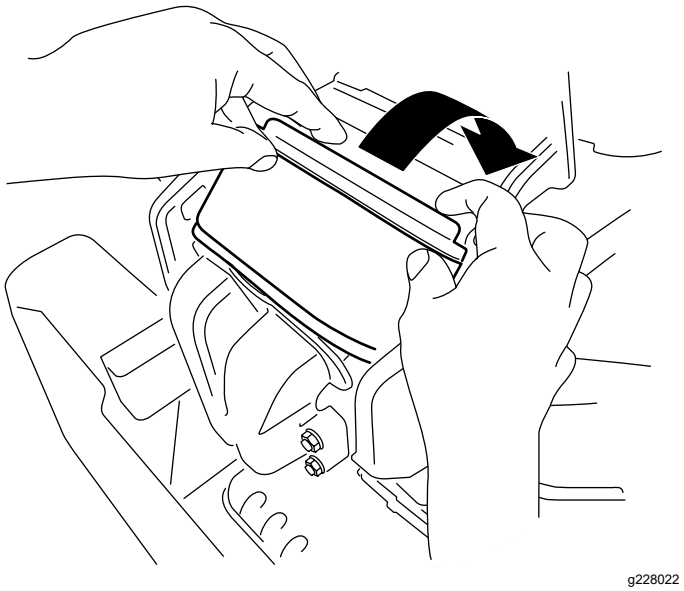


**Figure 38**

4. Close the cover.

# Servicing the Engine Oil

## Engine-Oil Specifications

**Oil Type:** Detergent oil (API service SF, SG, SH, SJ, or SL)

**Crankcase Capacity:** 2.4 L (81 fl oz) with oil filter

**Viscosity:** See the table below.

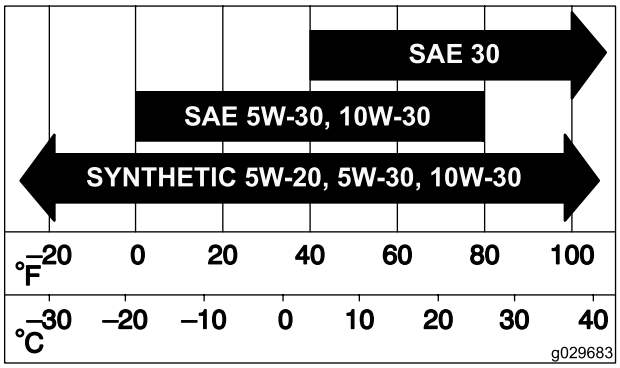


g029683

**Figure 39**

## Checking the Engine-Oil Level

**Service Interval:** Before each use or daily

**Note:** Check the oil when the engine is cold.

***Important:*** **If you overfill or underfill the engine crankcase with oil and run the engine, you may damage the engine.**

1. Park the machine on a level surface, disengage the blade-control switch, and move the motion-control levers outward to the PARK position.
2. Shut off the engine, remove the key, and wait for all moving parts to stop before leaving the operating position.

   **Note:** Ensure that the engine is cool so that the oil has had time to drain into the sump.
3. To keep dirt, grass clippings, etc., out of the engine, clean the area around the oil-fill cap and dipstick before removing it (Figure 40).

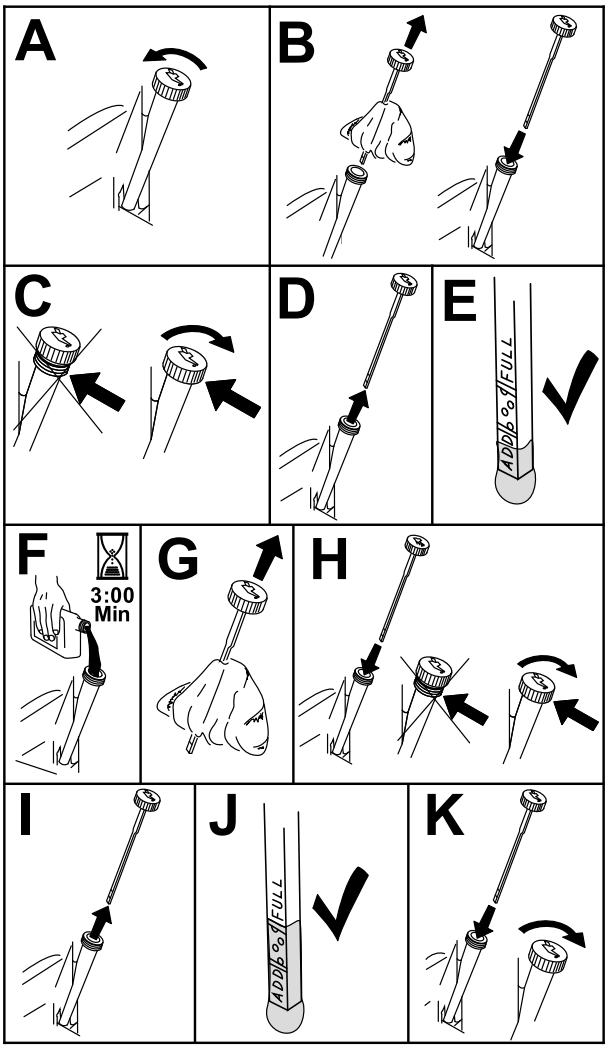


g235263

**Figure 40**

## Changing the Engine Oil and Oil Filter

**Service Interval:** After the first 5 hours/After the first month (whichever comes first)—Change the engine oil and filter.

Every 100 hours or yearly, whichever comes first—Change the engine oil and oil filter (more often in dirty or dusty conditions).

1. Park the machine on a level surface to ensure that the oil drains completely.
2. Park the machine on a level surface, disengage the blade-control switch, and move the motion-control levers outward to the PARK position.
3. Shut off the engine, remove the key, and wait for all moving parts to stop before leaving the operating position.
4. Drain the oil from the engine (Figure 41).

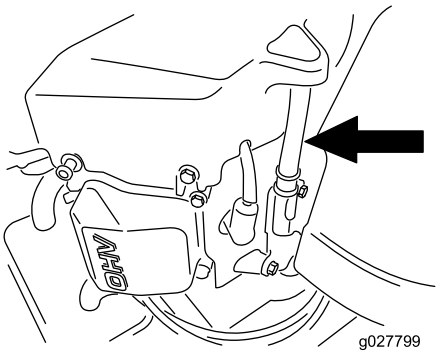


g027799

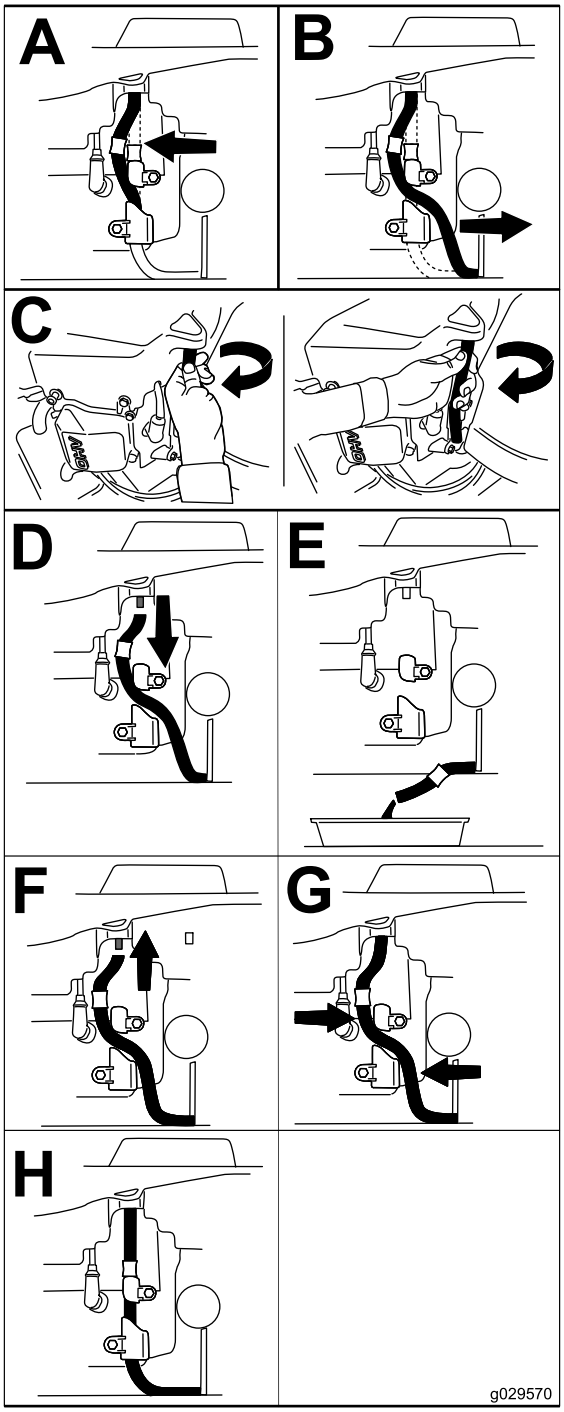


g029570

**Figure 41**

5. Change the engine-oil filter (Figure 42).

   **Note:** Ensure that the oil-filter gasket touches the engine and then turn the filter an extra 3/4 turn.

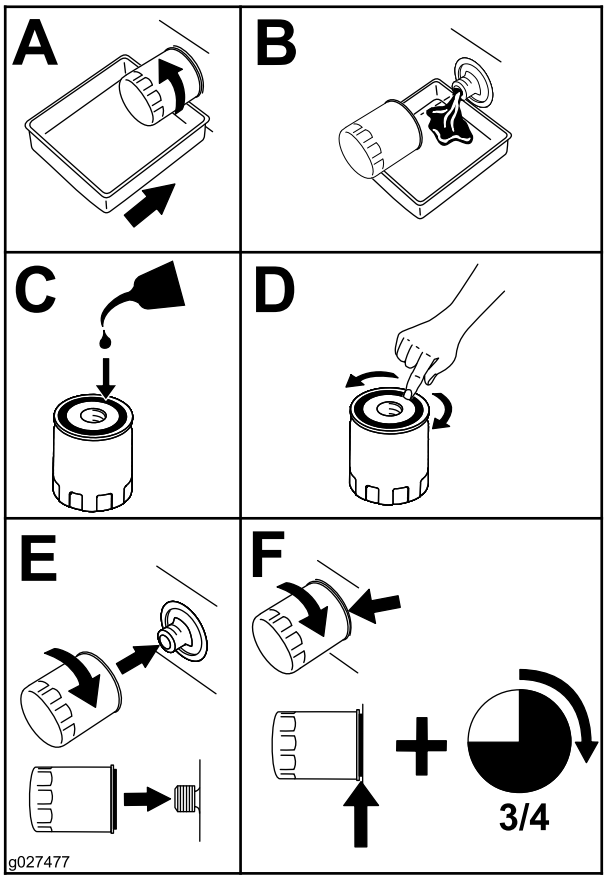


g027477

**Figure 42**

6. Slowly pour approximately 80% of the specified oil into the filler tube and slowly add the additional oil to bring it to the Full mark (Figure 43).

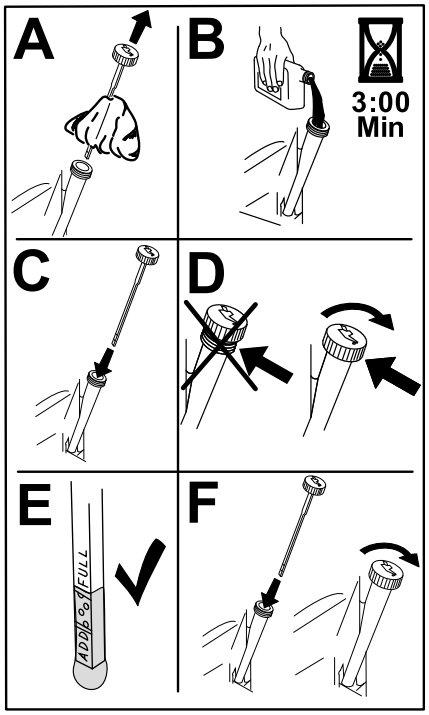


g235264

**Figure 43**

7. Dispose of the used oil at a recycling center.

# Servicing the Spark Plug

**Service Interval:** Every 100 hours or yearly, whichever comes first—Check the spark plug(s).

Every 200 hours/Every 2 years (whichever comes first)—Replace the spark plug(s).

Ensure that the air gap between the center and side electrodes is correct before installing the spark plug. Use a spark plug wrench for removing and installing the spark plug and a gapping tool or feeler gauge to check and adjust the air gap. Install a new spark plug if necessary.

**Type:** Champion® RN9YC or NGK® BPR6ES

**Air gap:** 0.76 mm (0.03 inch)

## Removing the Spark Plug

1. Park the machine on a level surface, disengage the blade-control switch, and move the motion-control levers outward to the PARK position.
2. Shut off the engine, remove the key, and wait for all moving parts to stop before leaving the operating position.
3. Clean the area around the base of the plug to keep dirt and debris out of the engine.
4. Remove the spark plug (Figure 44).

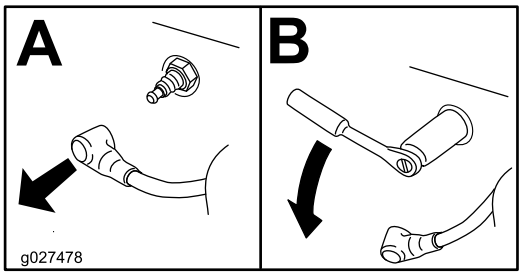


g027478

**Figure 44**

## Checking the Spark Plug

***Important:*** **Do not clean the spark plug(s). Always replace the spark plug(s) when it has a black coating, worn electrodes, an oily film, or cracks.**

If you see light brown or gray on the insulator, the engine is operating properly. A black coating on the insulator usually means the air cleaner is dirty.

Set the gap to 0.75 mm (0.03 inch).

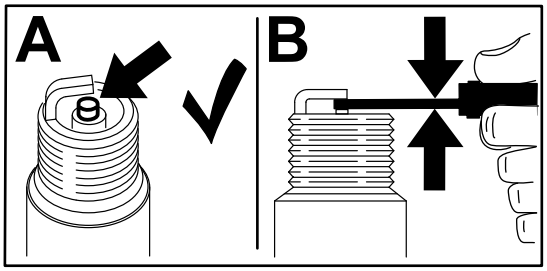


g206628

**Figure 45**

## Installing the Spark Plug

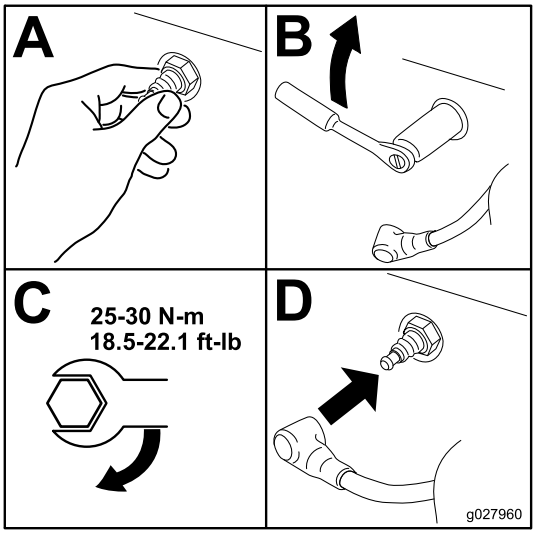


g027960

**Figure 46**

## Cleaning the Cooling System

1. Park the machine on a level surface, disengage the blade-control switch, and move the motion-control levers outward to the PARK position.
2. Shut off the engine, remove the key, and wait for all moving parts to stop before leaving the operating position.
3. Remove the air filter from the engine.
4. Remove the engine shroud.
5. To prevent debris entering the air intake, install the air filter to the filter base.
6. Clean debris and grass from the parts.
7. Remove the air filter and install the engine shroud.
8. Install the air filter.

# *Fuel System Maintenance*

**⚠ DANGER**

**In certain conditions, fuel is extremely flammable and highly explosive. A fire or explosion from fuel can burn you and others and can damage property.**

**Refer to Fuel Safety (page 13) for a complete list of fuel related precautions.**

## Replacing the In-Line Fuel Filter

**Service Interval:** Every 100 hours or yearly, whichever comes first—Check the in-line fuel filter.

Every 200 hours/Every 2 years (whichever comes first)—Replace the in-line fuel filter.

Never install a dirty filter after removing it from the fuel line.

1. Park the machine on a level surface, disengage the blade-control switch, and move the motion-control levers outward to the PARK position.
2. Shut off the engine, remove the key, and wait for all moving parts to stop before leaving the operating position.
3. Replace the filter (Figure 47).

   **Note:** Note: Ensure that the markings on the filter follow the fuel flow direction.

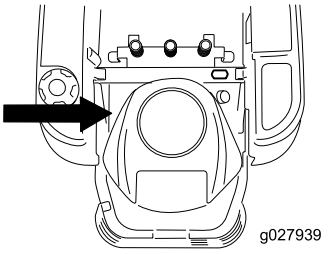


g027939

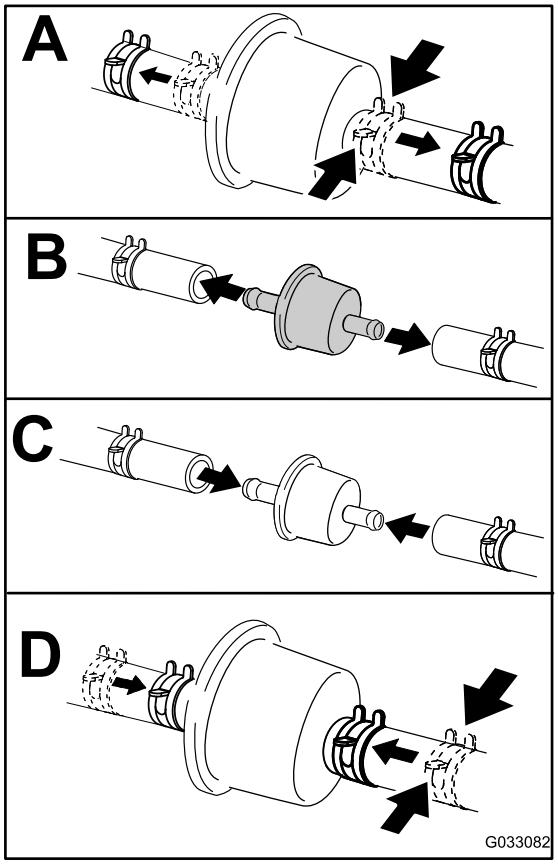


g033082

**Figure 47**

# *Electrical System Maintenance*

## Electrical System Safety

- Disconnect the battery before repairing the machine. Disconnect the negative terminal first and the positive last. Connect the positive terminal first and the negative last.
- Charge the battery in an open, well-ventilated area, away from sparks and flames. Unplug the charger before connecting or disconnecting the battery. Wear protective clothing and use insulated tools.

## Servicing the Battery

### Removing the Battery

**⚠ WARNING**

**Battery terminals or metal tools could short against metal machine components, causing sparks. Sparks can cause the battery gasses to explode, resulting in personal injury.**

- **When removing or installing the battery, do not allow the battery terminals to touch any metal parts of the machine.**
- **Do not allow metal tools to short between the battery terminals and metal parts of the machine.**

1. Park the machine on a level surface, disengage the blade-control switch, and move the motion-control levers outward to the PARK position.
2. Shut off the engine, remove the key, and wait for all moving parts to stop before leaving the operating position.
3. Raise the seat to access the battery.
4. Disconnect the negative (black) ground cable from the battery post (Figure 48).

   **Note:** Retain all fasteners.

**⚠ WARNING**

**Incorrectly removing the cables from battery could damage the machine and cables, causing sparks. Sparks can cause the battery gasses to explode, resulting in personal injury.**

- **Always disconnect the negative (black) battery cable before disconnecting the positive (red) cable.**
- **Always connect the positive (red) battery cable before connecting the negative (black) cable.**

5. Slide the rubber cover off the positive (red) cable.
6. Disconnect the positive (red) cable from the battery post (Figure 48).

   **Note:** Retain all fasteners.
7. Remove the battery hold-down (Figure 48), and lift the battery from the battery tray.

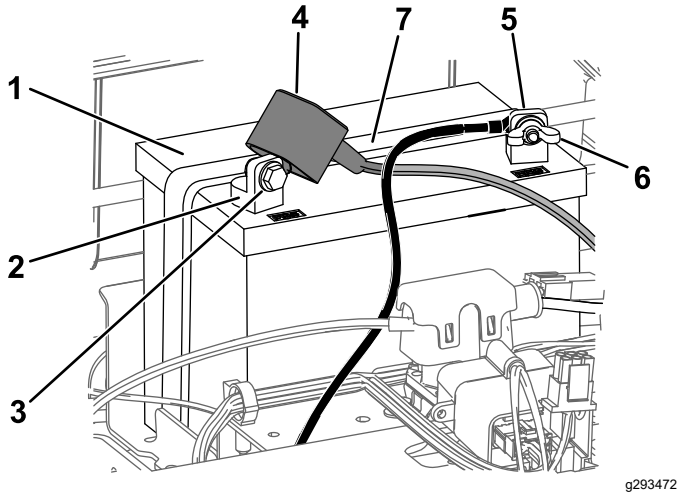


**Figure 48**

1. Battery
2. Positive (+) battery post
3. Bolt, washer, and nut
4. Terminal boot
5. Negative (–) battery post
6. Wing nut, washer, and bolt
7. Battery hold-down

## Charging the Battery

**Service Interval:** Before storage—Charge the battery and disconnect the battery cables.

1. Remove the battery from the chassis; refer to Removing the Battery (page 40).
2. Charge the battery for a minimum of 1 hour at 6 to 10 A.

   **Note:** Do not overcharge the battery.
3. When the battery is fully charged, unplug the charger from the electrical outlet, then disconnect the charger leads from the battery posts (Figure 49).

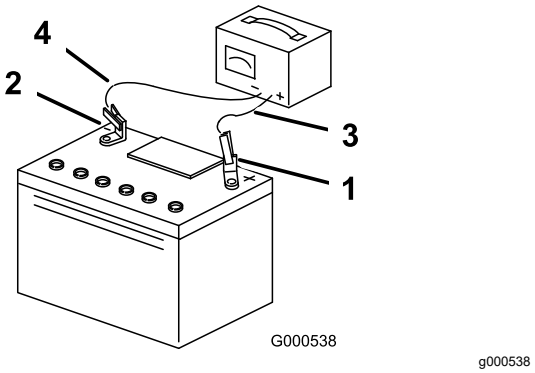


**Figure 49**

1. Positive (+) battery post
2. Negative (–) battery post
3. Red (+) charger lead
4. Black (–) charger lead

## Installing the Battery

1. Position the battery in the tray (Figure 48).
2. Using the fasteners previously removed, install the positive (red) battery cable to the positive (+) battery terminal.
3. Using the fasteners previously removed, install the negative battery cable to the negative (-) battery terminal.
4. Slide the red terminal boot onto the positive (red) battery post.
5. Secure the battery with the hold-down (Figure 48).
6. Lower the seat.

# *Drive System Maintenance*

## Checking the Tire Pressure

**Service Interval:** Every 25 hours—Check tire pressure.

Maintain the air pressure in the front and rear tires as specified. Uneven tire pressure can cause an uneven cut. Check the pressure at the valve stem (Figure 50). Check the tires when they are cold to get the most accurate pressure reading.

Refer to the maximum pressure suggested by the tire manufacturer on the sidewall of the caster wheel tires.

Inflate the rear drive-wheel tires to 90 kPa (13 psi).

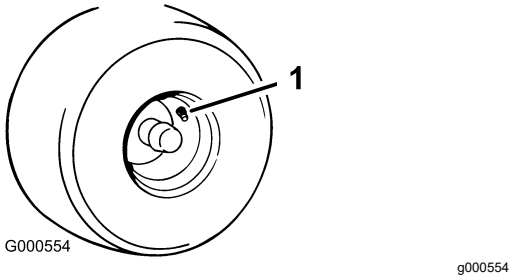


**Figure 50**

1. Valve stem

## Releasing the Electric Brake

You can manually release the electric brake by rotating the link arms forward. Once the electric brake is energized, the brake resets.

1. Turn the key to the OFF position or disconnect the battery.
2. Loosen the bottom 2 bolts holding the mower-deck curtain to the mower deck. Refer to Releasing the Mower-Deck Curtain (page 33).
3. Locate the shaft on the electric brake where the brake link arms are connected (Figure 51).
4. Rotate the shaft forward to release the brake.
5. Tighten the bottom 2 bolts for the mower-deck curtain to the mower deck. Refer to Releasing the Mower-Deck Curtain (page 33).

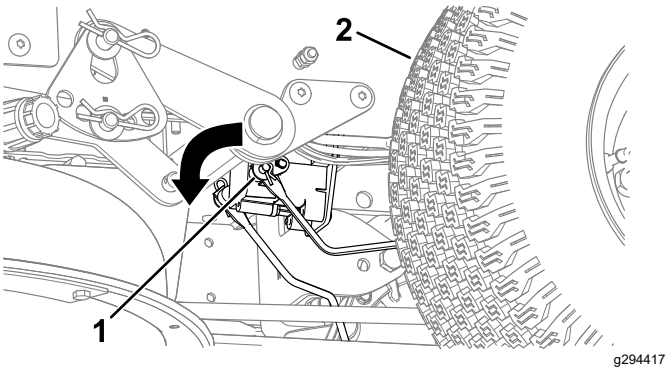


**Figure 51**

1. Brake-link arm on the electric brake control module
2. Left, rear tire

## Adjusting the Tracking

When driving the machine forward full speed across a flat, level surface, if the machine pulls to 1 side, adjust the tracking.

If the machine pulls to the left, adjust the right motion-control lever; if the machine pulls to the right, adjust the left motion-control lever.

**Note:** You can only adjust the tracking for driving forward.

1. Park the machine on a level surface, disengage the blade-control switch, and move the motion-control levers outward to the PARK position.
2. Shut off the engine, remove the key, and wait for all moving parts to stop before leaving the operating position.

3. Locate the tracking-adjustment bolt near the motion-control lever on the particular side that needs adjusting (Figure 52).

   **Note:** Raise the seat for easier access to the adjustment bolt.

4. Rotate the bolt to decrease the speed for that particular wheel.

   **Note:** Rotate the bolt a small amount to make minor adjustments.

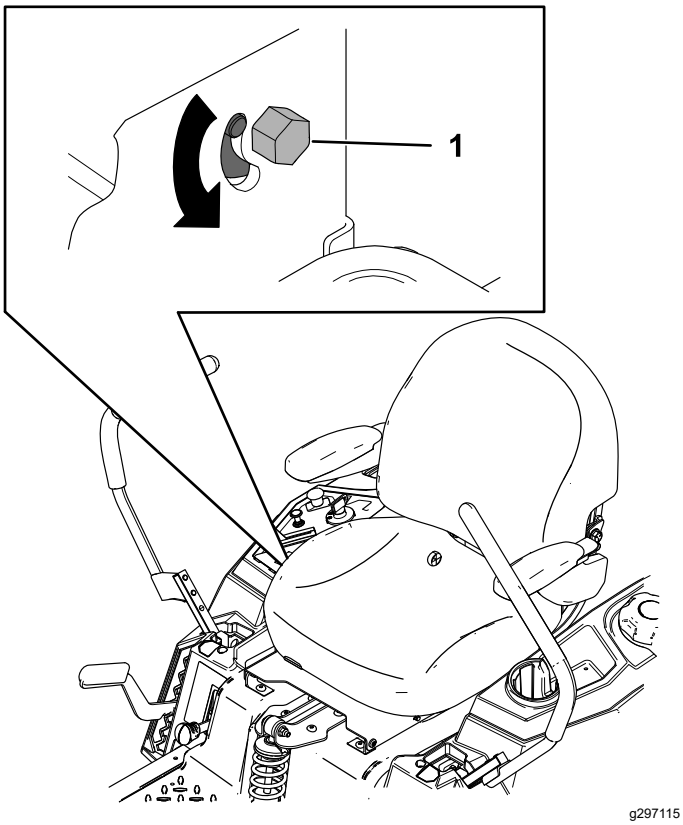


**Figure 52**

1. Bolt

5. Start the machine and drive forward across a flat, level surface with the motion-control levers fully forward to check if the machine tracks straight. Repeat the procedure as needed.

# Belt Maintenance

## Inspecting the Belts

**Service Interval:** Every 25 hours—Check the belts for wear or cracks.

Replace the belt if it is worn. The signs of a worn belt include squealing while the belt is rotating; the blades slipping while cutting grass; and frayed edges, burn marks, and cracks on the belt.

## Replacing the Mower Belt

The signs of a worn belt include squealing while the belt is rotating, blades slipping while cutting grass, and frayed edges, burn marks, and cracks on the belt. Replace the mower belt if any of these conditions are evident.

1. Park the machine on a level surface, disengage the blade-control switch, and move the motion-control levers outward to the PARK position.
2. Shut off the engine, remove the key, and wait for all moving parts to stop before leaving the operating position.
3. Set the height of cut at the lowest cutting position (38 mm (1-1/2 inches).
4. Loosen the bottom 2 bolts holding the mower-deck curtain to the mower deck. Refer to Releasing the Mower-Deck Curtain (page 33).
5. Loosen the screw and push in the tab on the cover to remove the pulley covers (Figure 53).

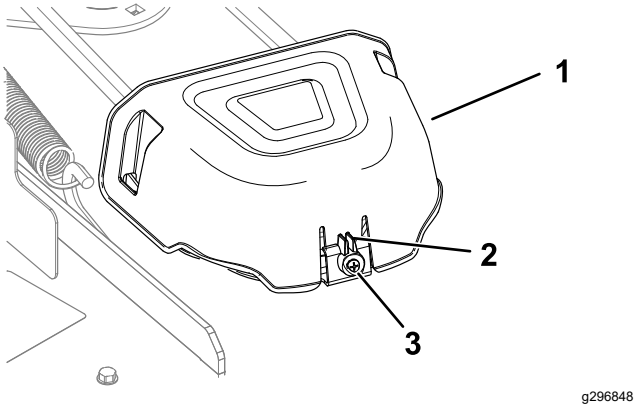


**Figure 53**

1. Cover
2. Tab
3. Screw

6. Using a spring-removal tool (Toro Part No. 92-5771), remove the idler spring from the deck hook to remove tension on the idler pulley, and roll the belt off the pulleys (Figure 54 or Figure 55).

**⚠ WARNING**

**The spring is under tension when installed and can cause personal injury.**

**Be careful when removing the belt.**

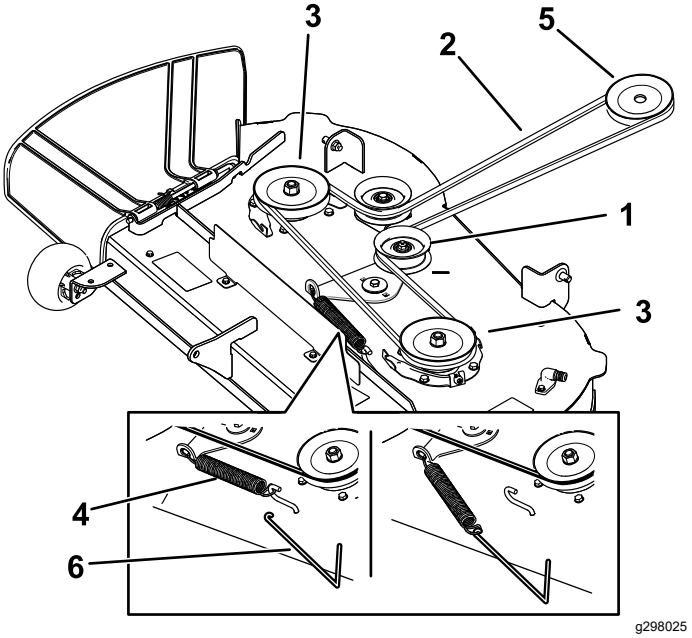


**Figure 54**

Mower decks with 2 blades

1. Idler pulley
2. Mower belt
3. Outside pulley
4. Spring
5. Engine pulley
6. Spring-removal tool

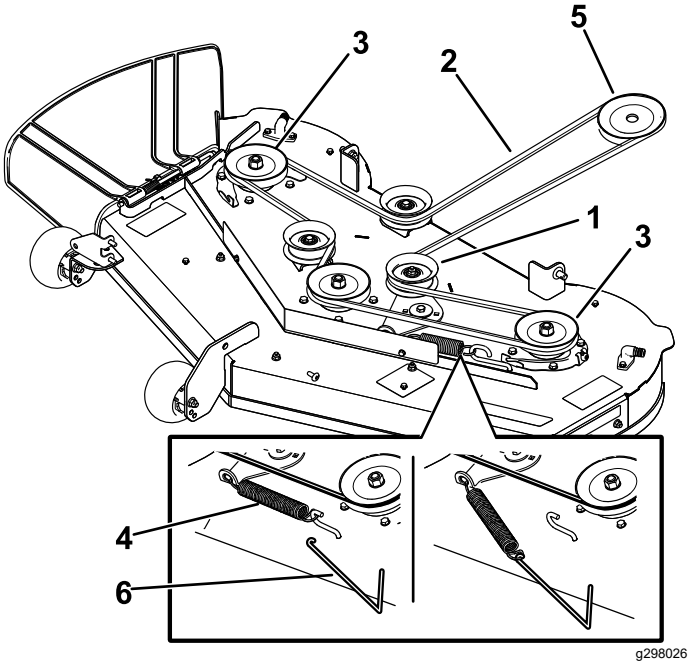


**Figure 55**

Mower decks with 3 blades

1. Idler pulley
2. Mower belt
3. Outside pulley
4. Spring
5. Engine pulley
6. Spring-removal tool

7. Route the new belt around the engine pulley and mower pulleys (Figure 54 or Figure 55).
8. Using a spring-removal tool (Toro Part No. 92-5771), install the idler spring over the deck hook and place tension on the idler pulley and the mower belt (Figure 54 or Figure 55).
9. Tighten the bottom 2 bolts for the mower-deck curtain to the mower deck. Refer to Releasing the Mower-Deck Curtain (page 33).
10. Install the pulley covers.

# Mower Maintenance

## Blade Safety

A worn or damaged blade can break, and a piece of the blade could be thrown toward you or bystanders, resulting in serious personal injury or death. Trying to repair a damaged blade may result in discontinued safety certification of the product.

- Inspect the blades periodically for wear or damage.
- Use care when checking the blades. Wrap the blades or wear gloves, and use caution when servicing the blades. Only replace or sharpen the blades; never straighten or weld them.
- On multi-bladed machines, take care as rotating 1 blade can cause other blades to rotate.

## Servicing the Cutting Blades

To ensure a superior quality of cut, keep the blades sharp. For convenient sharpening and replacement, keep extra blades on hand.

### Before Inspecting or Servicing the Blades

1. Park the machine on a level surface, disengage the blade-control switch, and move the motion-control levers outward to the PARK position.
2. Shut off the engine, remove the key, and disconnect the spark-plug wires from the spark plugs.

### Inspecting the Blades

**Service Interval:** Before each use or daily

1. Inspect the cutting edges (Figure 56).
2. If the edges are not sharp or have nicks, remove and sharpen the blade; refer to Sharpening the Blades (page 47).
3. Inspect the blades, especially in the curved area.
4. If you notice any cracks, wear, or a slot forming in this area, immediately install a new blade (Figure 56).

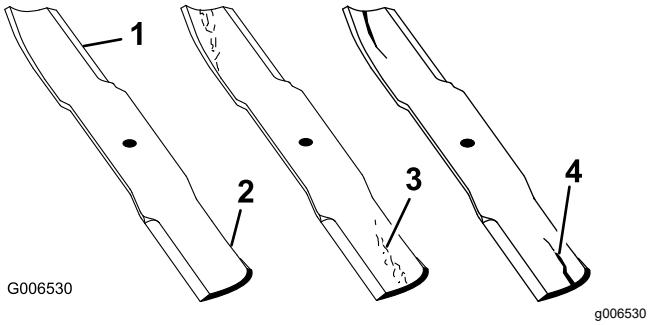


**Figure 56**

1. Cutting edge
2. Curved area
3. Wear/slot forming
4. Crack

### Checking for Bent Blades

**Note:** The machine must be on a level surface for the following procedure.

1. Raise the mower deck to the highest height-of-cut position.
2. While wearing thickly padded gloves, or other adequate hand protection, slowly rotate the blade into a position that allows you to measure the distance between the cutting edge and the level surface the machine is on (Figure 57).

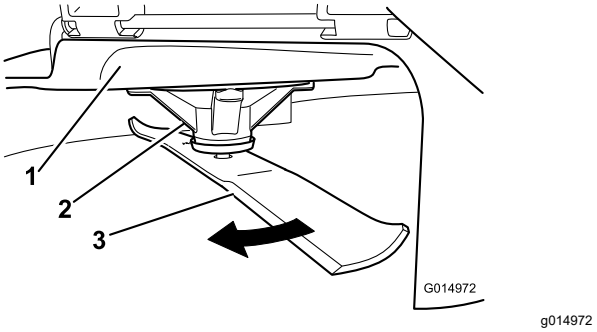


**Figure 57**

1. Deck
2. Spindle housing
3. Blade

3. Measure from the tip of the blade to the flat surface (Figure 58).

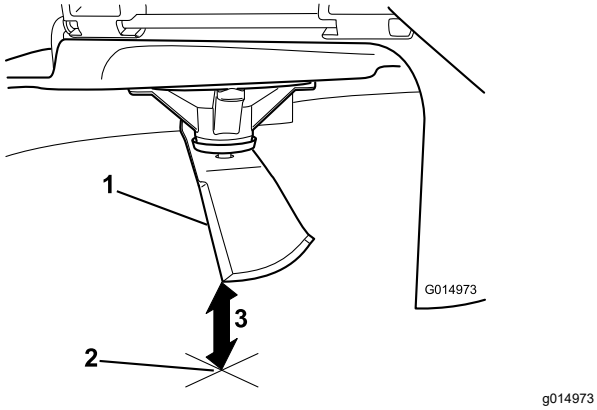


**Figure 58**

1. Blade (in position for measuring)
2. Level surface
3. Measured distance between blade and the surface (A)

4. Rotate the same blade 180 degrees so that the opposing cutting edge is now in the same position (Figure 59).

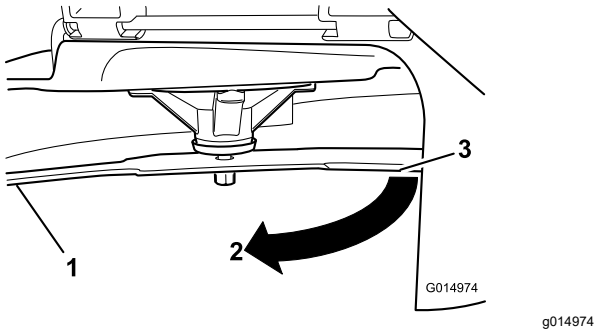


**Figure 59**

1. Blade (side previously measured)
2. Measurement (position used previously)
3. Opposing side of blade being moved into measurement position

5. Measure from the tip of the blade to the flat surface (Figure 60).

   **Note:** The variance should be no more than 3 mm (1/8 inch).

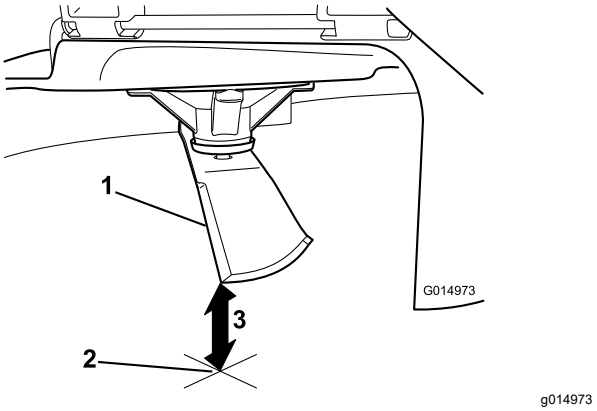


**Figure 60**

1. Opposite blade edge (in position for measuring)
2. Level surface
3. Second measured distance between blade and surface (B)

   A. If the difference between A and B is greater than 3 mm (1/8 inch), replace the blade with a new blade; refer to Removing the Blades (page 46) and Installing the Blades (page 47).

      **Note:** If a bent blade is replaced with a new blade, and the dimension obtained continues to exceed 3 mm (1/8 inch), the blade spindle could be bent. Contact an Authorized Service Dealer for service.

   B. If the variance is within constraints, move to the next blade.

6. Repeat this procedure on each blade.

## Removing the Blades

Replace the blades if they hit a solid object, or if the blade is out of balance or bent.

1. Hold the blade end using a rag or thickly padded glove.
2. Remove the blade bolt, curved washer, and blade from the spindle shaft (Figure 61).

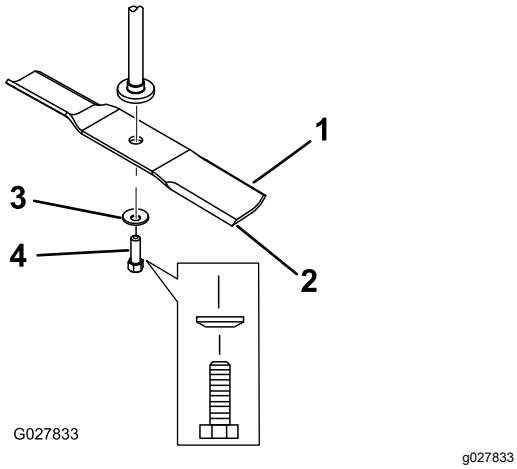


**Figure 61**

1. Sail area of the blade
2. Blade
3. Curved washer
4. Blade bolt

## Sharpening the Blades

1. Use a file to sharpen the cutting edge at both ends of the blade (Figure 62).

   **Note:** Maintain the original angle.

   **Note:** The blade retains its balance if the same amount of material is removed from both cutting edges.

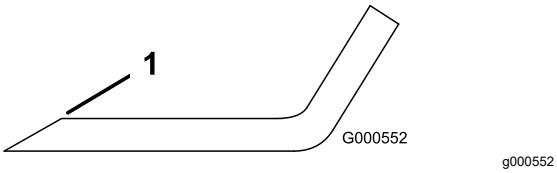


**Figure 62**

1. Sharpen at original angle.

2. Check the balance of the blade by putting it on a blade balancer (Figure 63).

   **Note:** If the blade stays in a horizontal position, the blade is balanced and can be used.

   **Note:** If the blade is not balanced, file some metal off the end of the sail area only (Figure 62).

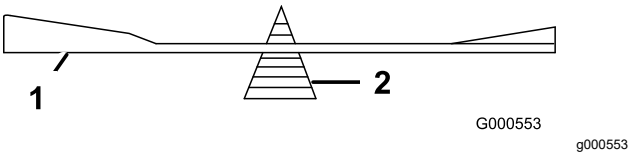


**Figure 63**

1. Blade
2. Balancer

3. Repeat this procedure until the blade is balanced.

## Installing the Blades

1. Install the blade onto the spindle shaft (Figure 61).

   ***Important:*** **The curved part of the blade must be pointing upward toward the inside of the mower to ensure proper cutting.**

2. Install the curved washer (cupped side toward the blade) and the blade bolt (Figure 61).
3. Torque the blade bolt to 81 to 108 N·m (60 to 80 ft-lb).

# Leveling the Mower Deck

Check to ensure that the mower deck is level any time you install the mower or when you see an uneven cut on your lawn.

Check the mower deck for bent blades prior to leveling, and remove and replace any bent blades; refer to the Servicing the Cutting Blades (page 45) before continuing.

Level the mower deck side-to-side first; then you can adjust the front-to-rear slope.

**Requirements:**

- The machine must be on a level surface.
- All tires must be properly inflated; refer to Checking the Tire Pressure (page 42).

## Checking the Side-to-Side Level

1. Park the machine on a level surface, disengage the blade-control switch (PTO), and move the motion-control levers outward to the PARK position.
2. Shut off the engine, remove the key, and wait for all moving parts to stop before leaving the operating position.
3. Set the height of cut to 76 mm (3 inches).
4. Carefully rotate the blades side to side.
5. Measure between the outside cutting edges and the flat surface (Figure 64 and Figure 65).

   **Note:** If both measurements are not within 5 mm (3/16 inch), an adjustment is required; refer to Leveling from Side to Side (page 49).

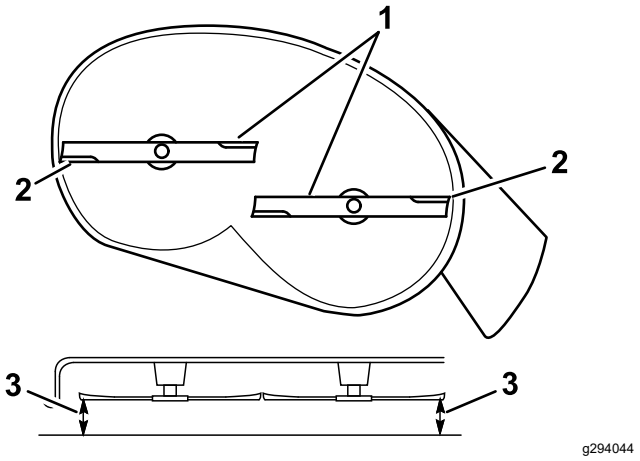


**Figure 64**

Mower Decks with 2 Blades

1. Blades side to side
2. Outside cutting edges
3. Measure from the tip of the blade to the flat surface here.

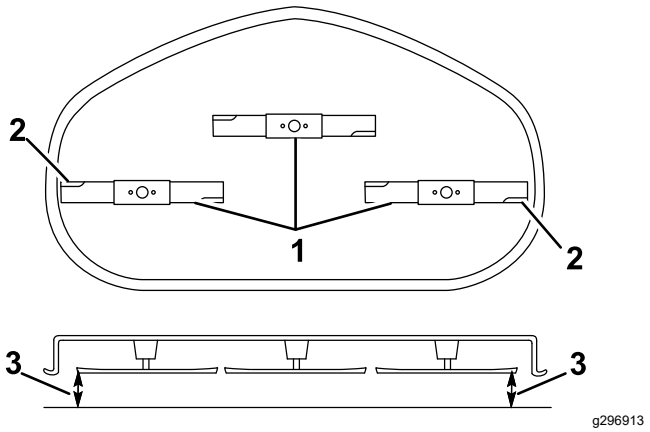


**Figure 65**

Mower Decks with 3 Blades

1. Blades side to side
2. Outside cutting edges
3. Measure from the tip of the blade to the flat surface here.

## Checking the Front-to-Rear Blade Slope

Check the front-to-rear blade level any time you install the mower. If the front of the mower is more than 7.9 mm (5/16 inch) lower than the rear of the mower, adjust the blade level.

1. Park the machine on a level surface, disengage the blade-control switch (PTO), and move the motion-control levers outward to the PARK position.
2. Shut off the engine, remove the key, and wait for all moving parts to stop before leaving the operating position.
3. Set the height of cut to 76 mm (3 inches).
4. Carefully rotate the blades so they are facing front to rear (Figure 66).
5. Measure from the tip of the front blade to the flat surface and the tip of the rear blade to the flat surface (Figure 66 or Figure 67).

   **Note:** If the front blade tip is not 1.6 to 7.9 mm (1/16 to 5/16 inch) lower than the rear blade tip, continue to the Adjusting the Front-to-Rear Blade Slope (page 50) procedure.

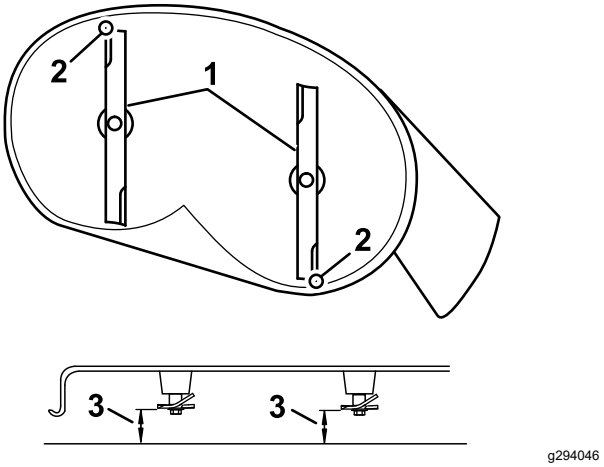


**Figure 66**

Mower Decks with 2 Blades

1. Blades front to rear
2. Outside cutting edges
3. Measure from the tip of the blade to the flat surface here.

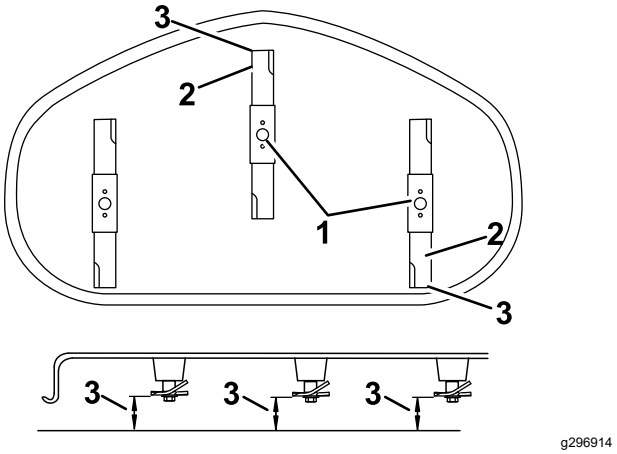


**Figure 67**

Mower Decks with 3 Blades

1. Blades front to rear
2. Outside cutting edges
3. Measure from the tip of the blade to the flat surface here.

## Leveling from Side to Side

1. Move to the left side of the machine.
2. Set the anti-scalp rollers to the top holes or remove them completely for this procedure; refer to Adjusting the Anti-Scalp Rollers (page 26).
3. Set the height-of-cut lever to the 76 mm (3 inch) position; refer to Adjusting the Height of Cut (page 26).
4. Place 2 blocks, each having a thickness of 6.6 cm (2-5/8 inches), under each side of the front edge of the deck but not under the anti-scalp roller brackets (Figure 68 or Figure 69).
5. Place 2 blocks, each having a thickness of 7.3 cm (2-7/8 inches), under the rear edge of the cutting deck skirt, 1 on each side of the cutting deck (Figure 68 or Figure 69).

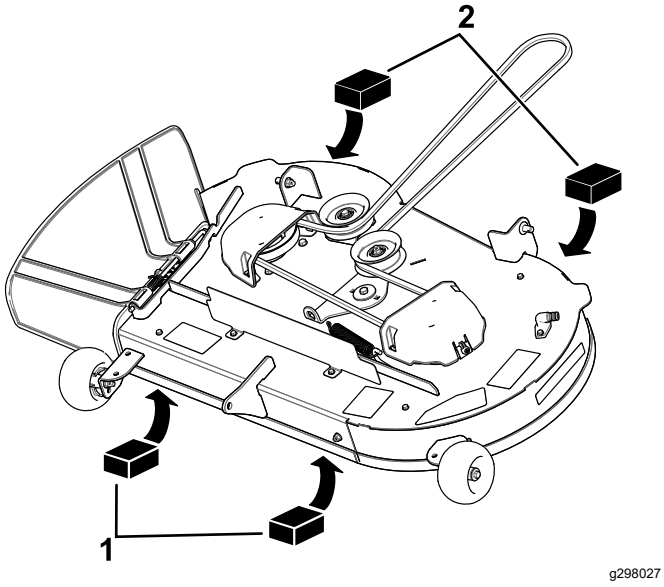


**Figure 68**

Mower Decks with 2 Blades

1. Wood block—6.6 cm (2-5/8 inches) thick
2. Wood block—7.3 cm (2-7/8 inches) thick

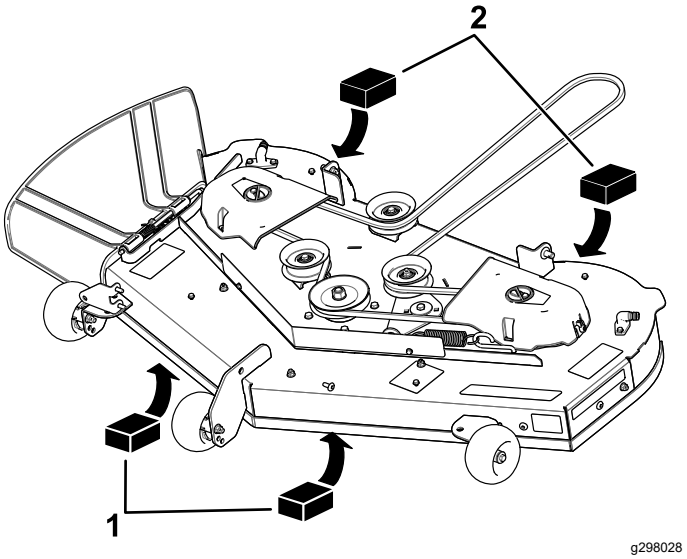


**Figure 69**

Mower Decks with 3 Blades

1. Wood block—6.6 cm (2-5/8 inches) thick
2. Wood block—7.3 cm (2-7/8 inches) thick

6. Remove the hairpin cotter and washer from the lower lift-arm pin (Figure 70).

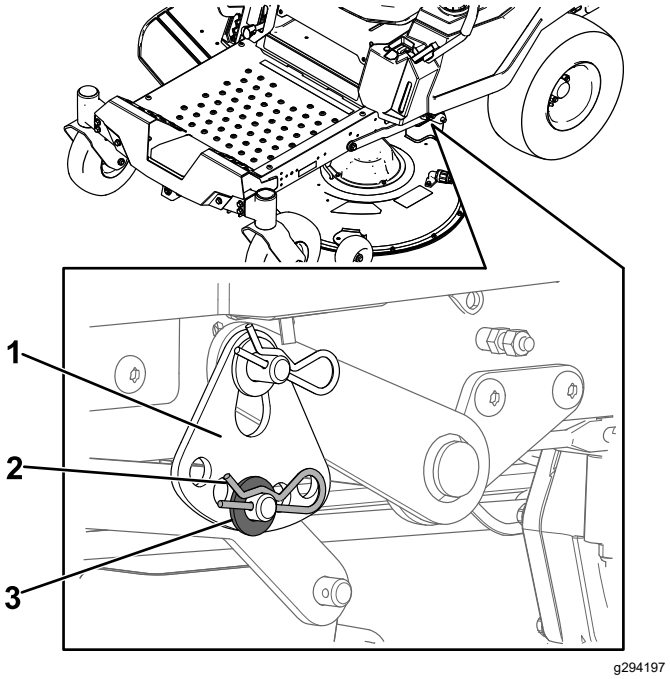


**Figure 70**

1. Height-of-cut plate
2. Hairpin cotter
3. Washer

7. Rotate the height-of-cut plate to a different hole so that it supports the weight of the mower deck after you install the plate (Figure 71).

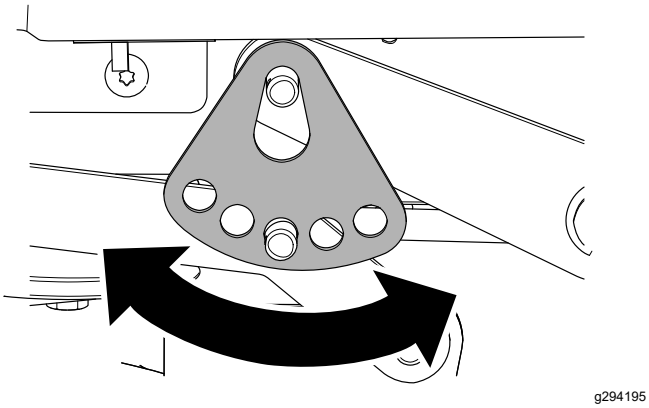


**Figure 71**

8. Install the washer and hairpin cotter (Figure 71).
9. Repeat steps 6 through 8 for the other side of the machine.
10. Check the side-to-side level again; repeat this procedure until the measurements are correct.
11. Continue leveling the mower deck by checking the front-to-rear blade slope; refer to Checking the Front-to-Rear Blade Slope (page 48).

## Adjusting the Front-to-Rear Blade Slope

1. Rotate the adjustment nut in the front of the mower (Figure 72).

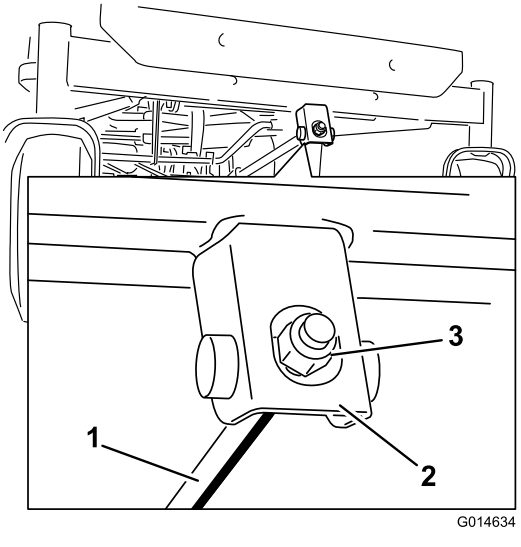


**Figure 72**

1. Adjusting rod
2. Adjusting block
3. Adjustment nut

2. To raise the front of the mower, tighten the adjustment nut.
3. To lower the front of the mower, loosen the adjustment nut.
4. After adjustment, check the front-to-rear slope again, continue adjusting the nut until the front blade tip is 1.6 to 7.9 mm (1/16 to 5/16 inch) lower than the rear blade tip (Figure 66).
5. When the front-to-rear blade slope is correct, check the side-to-side level of the mower again; refer to Checking the Side-to-Side Level (page 47).

# Removing the Mower Deck

1. Park the machine on a level surface, disengage the blade-control switch (PTO), and move the motion-control levers outward to the PARK position.
2. Shut off the engine, remove the key, and wait for all moving parts to stop before leaving the operating position.
3. Lower the height-of-cut lever to the lowest position.
4. Loosen the bottom 2 bolts holding the mower-deck curtain to the mower deck. Refer to Releasing the Mower-Deck Curtain (page 33).

5. Remove the hairpin cotter from the front support rod, and remove the rod from the deck bracket (Figure 73).

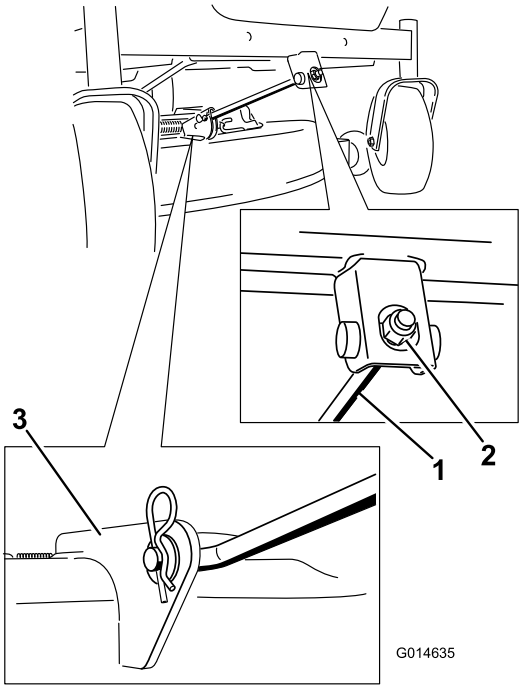


g014635

**Figure 73**

1. Front support rod
2. Locking nut
3. Deck bracket

6. Carefully lower the front of the mower deck to the ground.
7. On 1 side of the machine, remove the washer and hairpin cotter from the deck pin (Figure 74).

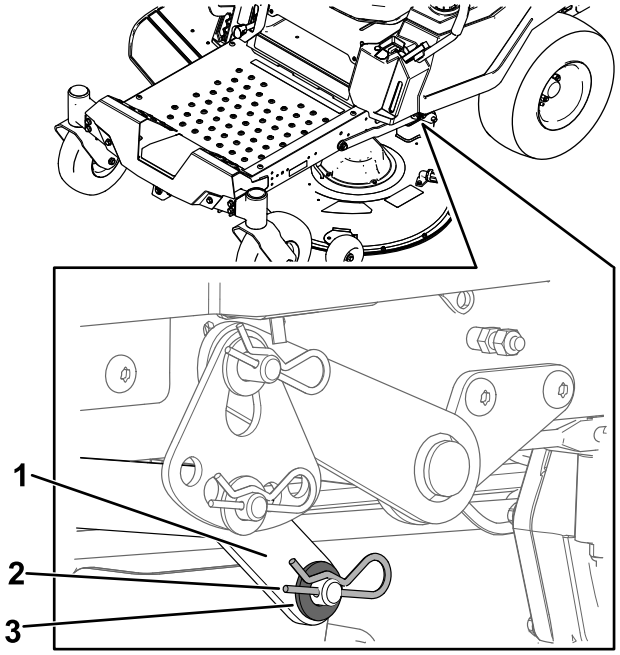


g295768

**Figure 74**

1. Lift arm
2. Hairpin cotter
3. Washer

8. Remove the lift arm from the deck pin (Figure 74).
9. Repeat steps 7 and 8 for the other side of the machine.
10. Slide the mower deck rearward to remove the mower belt from the engine pulley.
11. Slide the mower deck out from underneath the machine.

    **Note:** Retain all parts for future installation.

# Installing the Mower Deck

1. Park the machine on a level surface, disengage the blade-control switch (PTO), and move the motion-control levers outward to the PARK position.
2. Shut off the engine, remove the key, and wait for all moving parts to stop before leaving the operating position.
3. Slide the mower under the machine.
4. Lower the height-of-cut lever to the lowest position.
5. On 1 side of the machine, lift the rear of the mower deck and install the lift arm to the deck pin (Figure 74).
6. Install the lift arm using the washer and hairpin cotter (Figure 74).
7. Repeat steps 5 and 6 for the other side of the machine.

8. Attach the front support rod to the mower deck with the clevis pin and hairpin cotter (Figure 73).
9. Install the mower belt onto the engine pulley; refer to Replacing the Mower Belt (page 43).
10. Tighten the bottom 2 bolts for the mower-deck curtain to the mower deck; refer to Releasing the Mower-Deck Curtain (page 33).

# Replacing the Grass Deflector

**Service Interval:** Before each use or daily—Inspect the grass deflector for damage.

**⚠ WARNING**

**An uncovered discharge opening could allow the machine to throw objects toward you or bystanders, resulting in serious injury. Also, contact with the blade could occur.**

**Never operate the machine without the grass deflector, the discharge cover, or the grass-collection system in place.**

1. Remove the nut (3/8 inch) from the rod under the mower (Figure 75).

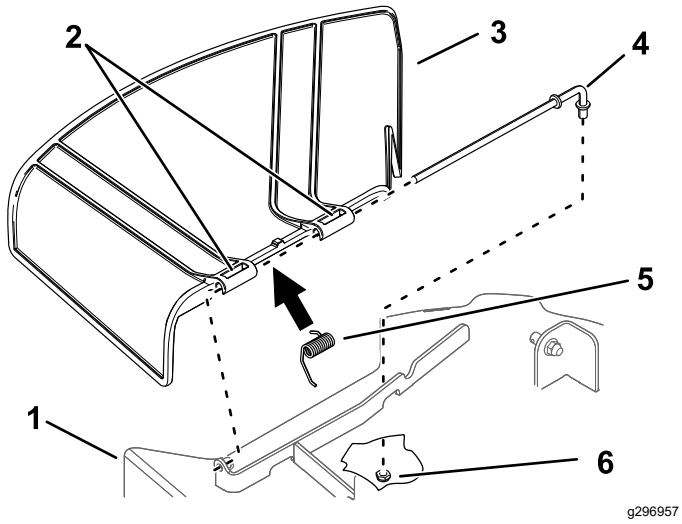


**Figure 75**

1. Mower deck
2. Grass-deflector bracket
3. Grass deflector
4. Rod
5. Spring
6. Nut (3/8 inch)

2. Slide the rod out of the short stand-off, spring, and grass deflector (Figure 75).
3. Remove the damaged or worn grass deflector.
4. Replace the grass deflector (Figure 75).
5. Slide the rod, straight end, through the rear grass deflector bracket.
6. Place the spring on the rod, with end wires down, and between the grass deflector brackets.
7. Slide the rod through the second grass-deflector bracket (Figure 75).
8. Insert the rod at the front of the grass deflector into the short standoff on the deck.
9. Secure the rear end of the rod into the mower with a nut (3/8 inch) as shown in Figure 75.

***Important:*** **The grass deflector must be spring-loaded in the down position. Lift the deflector up to test that it snaps into the full-down position.**

# Cleaning

## Washing the Underside of the Mower Deck

**Service Interval:** After each use—Clean the mower-deck housing.

***Important:*** **You can wash the machine with a mild detergent and water. Do not pressure wash the machine. Avoid excessive use of water, especially near the control panel, under the seat, around the engine, hydraulic pumps, and motors.**

Wash the underside of the mower deck after each use to prevent grass buildup for improved mulch action and clipping dispersal.

1. Park the machine on a level surface, disengage the blade-control switch (PTO), and move the motion-control levers outward to the PARK position.
2. Shut off the engine, remove the key, and wait for all moving parts to stop before leaving the operating position.
3. Attach the hose coupling to the end of the mower washout fitting, and turn the water on high (Figure 76).

   **Note:** Spread petroleum jelly on the washout fitting O-ring to make the coupling slide on easier and protect the O-ring.

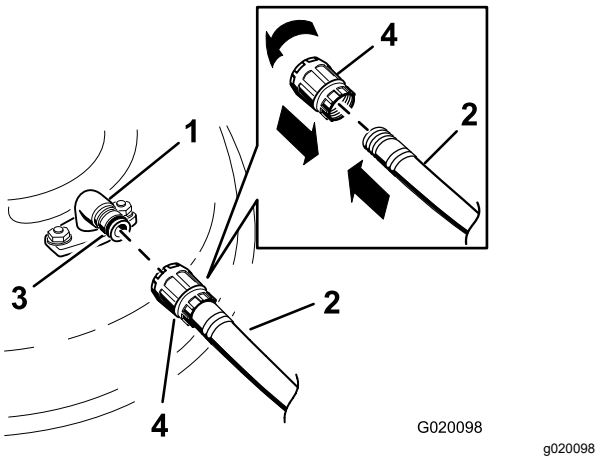


**Figure 76**

1. Washout fitting
2. Hose
3. O-ring
4. Coupling

4. Lower the mower to the lowest height-of-cut.
5. Sit on the seat and start the engine.
6. Engage the blade-control switch and let the mower run for 1 to 3 minutes.
7. Disengage the blade-control switch, shut off the engine, remove the key, and wait for all moving parts to stop.
8. Turn the water off and remove the coupling from the washout fitting.

   **Note:** If the mower is not clean after 1 washing, soak it and let it stand for 30 minutes. Then repeat the process.
9. Run the mower again for 1 to 3 minutes to remove excess water.

**⚠ WARNING**

**A broken or missing washout fitting could expose you and others to thrown objects or blade contact. Contact with a blade or thrown debris can cause injury or death.**

- **Replace broken or missing washout fitting immediately, before using machine again.**
- **Never put your hands or feet under the mower or through openings in the machine.**

## Disposing of Waste

Engine oil, batteries, hydraulic fluid, and engine coolant are pollutants to the environment. Dispose of these according to your state and local regulations.

# Storage

## Storage Safety

- Let the engine cool before storing the machine.
- Do not store the machine or fuel near flames or drain the fuel indoors.

## Cleaning and Storage

1. Park the machine on a level surface, disengage the blade-control switch (PTO), and move the motion-control levers outward to the PARK position.
2. Shut off the engine, remove the key, and wait for all moving parts to stop before leaving the operating position.
3. Remove grass clippings, dirt, and grime from the external parts of the entire machine, especially the engine and hydraulic system. Clean dirt and chaff from the outside of the engine cylinder-head fins and blower housing.

   ***Important:*** **You can wash the machine with mild detergent and water. Do not pressure-wash the machine. Avoid excessive use of water, especially near the control panel, engine, hydraulic pumps, and motors.**
4. Check the parking brake operation; refer to Park Position (page 11).
5. Service the air cleaner; refer to Servicing the Air Cleaner (page 34).
6. Grease the machine; refer to Lubrication (page 33).
7. Change the crankcase oil; refer to Changing the Engine Oil and Oil Filter (page 36).
8. Check the tire pressure; refer to Checking the Tire Pressure (page 42).
9. Charge the battery; refer to Charging the Battery (page 41).
10. Scrape any heavy buildup of grass and dirt from the underside of the mower, then wash the machine with a garden hose.

    **Note:** Run the machine with the blade-control switch (PTO) engaged and the engine at high idle for 2 to 5 minutes after washing.
11. Check the condition of the blades; refer to Servicing the Cutting Blades (page 45).
12. Prepare the machine for storage for over 30 days as follows:

    A. Add fuel stabilizer/conditioner to fresh fuel in the tank. Follow mixing instructions from the fuel stabilizer manufacturer. Do not use an alcohol-based stabilizer (ethanol or methanol).

    B. Run the engine to distribute conditioned fuel through the fuel system for 5 minutes.

    C. Shut off the engine, allow it to cool, and drain the fuel tank using a pump type syphon or operate engine until it shuts off.

    D. Dispose of fuel properly. Recycle the fuel according to local codes.

    ***Important:*** **Do not store fuel containing stabilizer/conditioner longer than the duration recommended by the fuel-stabilizer manufacturer.**
13. Remove and check the condition of the spark plug(s); refer to Servicing the Spark Plug (page 38). With the spark plug(s) removed from the engine, pour 30 ml (2 tablespoons) of engine oil into the spark plug hole. Use the starter to crank the engine and distribute the oil inside the cylinder. Install the spark plug(s). Do not install the wire on the spark plug(s).
14. Check and tighten all fasteners. Repair or replace any part that is damaged.
15. Paint all scratched or bare metal surfaces. Paint is available from your Authorized Service Dealer.
16. Store the machine in a clean, dry garage or storage area. Remove the key from the switch and keep it out of reach of children or other unauthorized users. Cover the machine to protect it and keep it clean.

# Storing the Battery

1. Fully charge the battery.
2. Let the battery rest for 24 hours, then check the battery voltage.

   **Note:** If the battery voltage is below 12.6 V, repeat steps 1 and 2.
3. Disconnect the cables from the battery.
4. Check the voltage periodically to ensure that the voltage is 12.4 V or higher.

   **Note:** If the battery voltage is below 12.4 V, repeat steps 1 and 2.

## Battery Storage Tips

- Store the battery in a cool, dry area in an upright position.
- Do not stack batteries directly on top of each other, unless they are in cartons.
- Do not stack more than 3 batteries (only 2 if the battery type is commercial).
- Test a wet battery every 4 to 6 months and charge it, if necessary.
- Always test and charge the battery before installation.

# Troubleshooting

| Problem | Possible Cause | Corrective Action |
|---|---|---|
| The fuel tank is showing signs of collapsing or the machine is frequently showing signs of running out of fuel. | 1. The air-cleaner paper element clogged. | 1. Clean the paper element. |
| The engine overheats. | 1. The engine load is excessive.<br>2. The oil level in the crankcase is low.<br>3. The cooling fins and air passages under the engine-blower housing are plugged.<br>4. The air cleaner is dirty.<br>5. Dirt, water, or stale fuel is in the fuel system. | 1. Reduce the ground speed.<br>2. Add oil to the crankcase.<br>3. Remove the obstruction from the cooling fins and air passages.<br>4. Clean or replace the air-cleaner element.<br>5. Contact an Authorized Service Dealer |
| The starter does not crank. | 1. The blade-control switch is engaged.<br>2. The motion-control levers are not in the PARK position.<br>3. The battery is dead.<br>4. The electrical connections are corroded or loose.<br>5. A fuse is blown.<br>6. A relay or switch is damaged. | 1. Disengage the blade-control switch.<br>2. Move the motion-control levers outward to the PARK position.<br>3. Charge the battery.<br>4. Check the electrical connections for good contact.<br>5. Replace the fuse.<br>6. Contact an Authorized Service Dealer. |
| The engine does not start, starts hard, or fails to keep running. | 1. The fuel tank is empty.<br>2. The choke (if applicable) is not on.<br>3. The air cleaner is dirty.<br>4. The spark-plug wire(s) is loose or disconnected.<br>5. The spark plug(s) is pitted, fouled, or the gap is incorrect.<br>6. There is dirt in fuel filter.<br>7. Dirt, water, or stale fuel is in fuel system.<br>8. There is incorrect fuel in the fuel tank.<br>9. The oil level in the crankcase is low. | 1. Fill the fuel tank.<br>2. Move the choke lever to the ON position.<br>3. Clean or replace the air-cleaner element.<br>4. Install the wire(s) on the spark plug.<br>5. Install a new, correctly gapped spark plug(s).<br>6. Replace the fuel filter.<br>7. Contact an Authorized Service Dealer.<br>8. Drain the tank and replace the fuel with the proper type.<br>9. Add oil to the crankcase. |
| The engine loses power. | 1. The engine load is excessive.<br>2. The air cleaner is dirty.<br>3. The oil level in the crankcase is low.<br>4. The cooling fins and air passages under the engine blower housing are plugged.<br>5. The spark plug(s) is pitted, fouled, or the gap is incorrect.<br>6. The fuel-tank vent is blocked.<br>7. There is dirt in the fuel filter.<br>8. Dirt, water, or stale fuel is in the fuel system.<br>9. There is incorrect fuel in the fuel tank. | 1. Reduce the ground speed.<br>2. Clean the air-cleaner element.<br>3. Add oil to the crankcase.<br>4. Remove the obstruction from the cooling fins and air passages.<br>5. Install a new, correctly gapped spark plug(s).<br>6. Contact an Authorized Service Dealer.<br>7. Replace the fuel filter.<br>8. Contact an Authorized Service Dealer.<br>9. Contact an Authorized Service Dealer. |

| Problem | Possible Cause | Corrective Action |
|---|---|---|
| The machine does not drive. | 1. The bypass valves are open.<br>2. The traction belts are worn, loose, or broken.<br>3. The traction belts are off the pulleys.<br>4. The transmission has failed. | 1. Close the tow valves.<br>2. Contact an Authorized Service Dealer.<br>3. Contact an Authorized Service Dealer.<br>4. Contact an Authorized Service Dealer. |
| The machine vibrates abnormally. | 1. The cutting blade(s) is/are bent or unbalanced.<br>2. The blade mounting bolt is loose.<br>3. The engine mounting bolts are loose.<br>4. The engine pulley, idler pulley, or blade pulley is loose.<br>5. The engine pulley is damaged.<br>6. The blade spindle is bent.<br>7. The motor mount is loose or worn. | 1. Install new cutting blade(s).<br>2. Tighten the blade mounting bolt.<br>3. Tighten the engine mounting bolts.<br>4. Tighten the appropriate pulley.<br>5. Contact an Authorized Service Dealer.<br>6. Contact an Authorized Service Dealer.<br>7. Contact an Authorized Service Dealer. |
| The cutting height is uneven. | 1. The blade(s) is not sharp.<br>2. A cutting blade(s) is/are bent.<br>3. The mower is not level.<br>4. An anti-scalp roller (if applicable) is not set correctly.<br>5. The underside of the mower deck is dirty.<br>6. The tire pressure is incorrect.<br>7. A blade spindle is bent. | 1. Sharpen the blade(s).<br>2. Install a new cutting blade(s).<br>3. Level the mower from side-to-side and front-to-rear.<br>4. Adjust the anti-scalp wheel height.<br>5. Clean the underside of the mower deck.<br>6. Adjust the tire pressure.<br>7. Contact an Authorized Service Dealer. |
| The blades do not rotate. | 1. The drive belt is worn, loose or broken.<br>2. The drive belt is off of the pulley.<br>3. The power-takeoff (PTO) switch or PTO clutch is faulty.<br>4. The mower belt is worn, loose, or broken. | 1. Install a new drive belt.<br>2. Install the drive belt and check the adjusting shafts and belt guides for the correct position.<br>3. Contact an Authorized Service Dealer.<br>4. Install a new mower belt. |

# Schematics

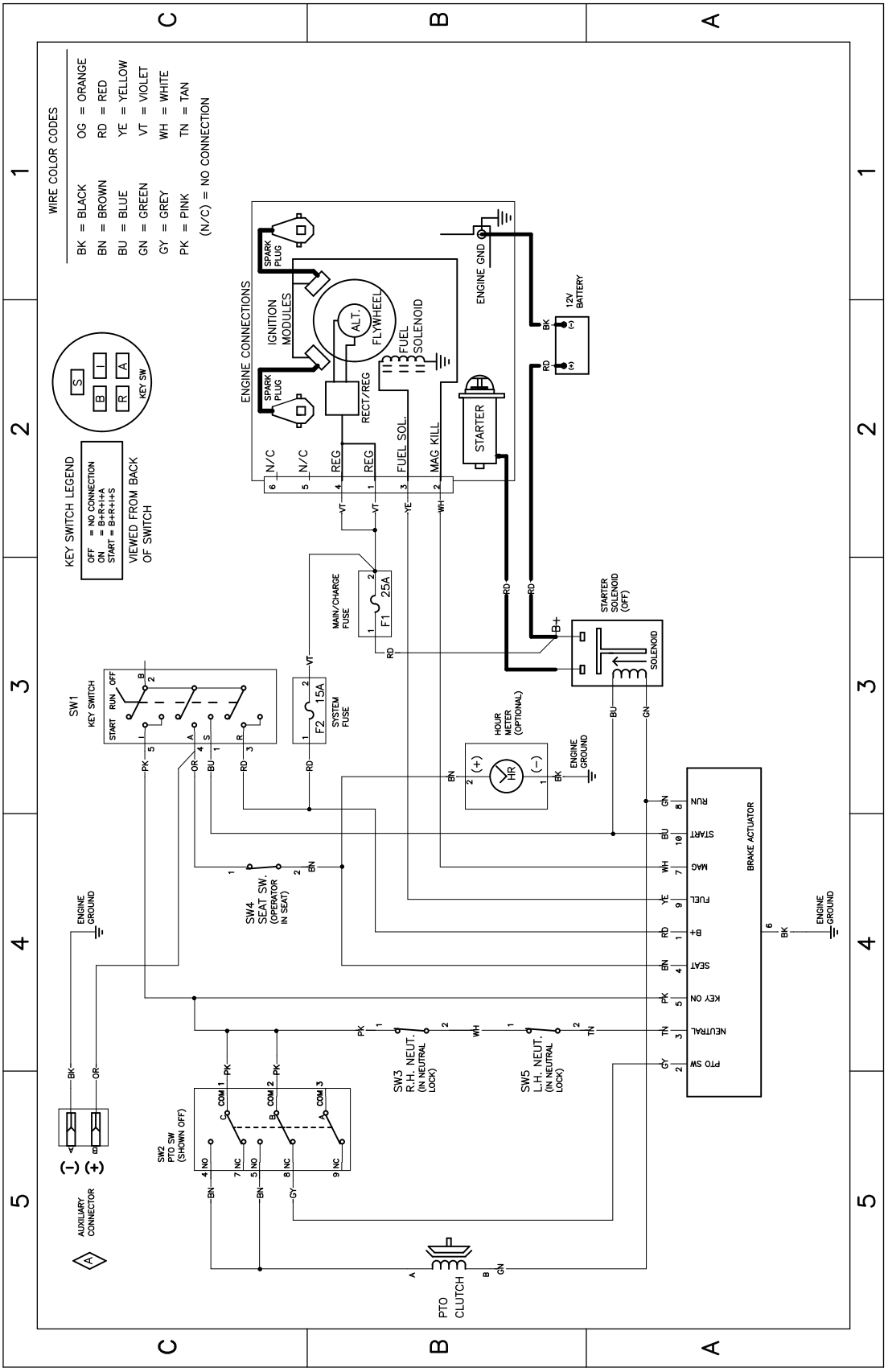


g307974

**Electrical Diagram—139–2356 (Rev. A)**

# Notes:

# EEA/UK Privacy Notice

**Toro's Use of Your Personal Information**

The Toro Company ("Toro") respects your privacy. When you purchase our products, we may collect certain personal information about you, either directly from you or through your local Toro company or dealer. Toro uses this information to fulfil contractual obligations - such as to register your warranty, process your warranty claim or to contact you in the event of a product recall - and for legitimate business purposes - such as to gauge customer satisfaction, improve our products or provide you with product information which may be of interest. Toro may share your information with our subsidiaries, affiliates, dealers or other business partners in connection these activities. We may also disclose personal information when required by law or in connection with the sale, purchase or merger of a business. We will never sell your personal information to any other company for marketing purposes.

**Retention of your Personal Information**

Toro will keep your personal information as long as it is relevant for the above purposes and in accordance with legal requirements. For more information about applicable retention periods please contact legal@toro.com.

**Toro's Commitment to Security**

Your personal information may be processed in the US or another country which may have less strict data protection laws than your country of residence. Whenever we transfer your information outside of your country of residence, we will take legally required steps to ensure that appropriate safeguards are in place to protect your information and to make sure it is treated securely.

**Access and Correction**

You may have the right to correct or review your personal data, or object to or restrict the processing of your data. To do so, please contact us by email at legal@toro.com. If you have concerns about the way in which Toro has handled your information, we encourage you to raise this directly with us. Please note that European residents have the right to complain to your Data Protection Authority.