Form No. 3433-802 Rev C

TORO®

Count on it.

Parts Catalog

# Groundsmaster® 1200 Series

## Pull Behind Rotary Mower

**Model No. 31905—Serial No. 405300001 and Up**

Register at www.Toro.com.
Original Instructions (EN)

CE

*3433-802* C

# Ordering Replacement Parts

To order replacement parts, please supply the part number, the quantity, and the description of each part desired.

### Understanding Reference Numbers

Each identified part in an illustration has a reference number. The reference number for a part also appears in the parts list, along with other information about the part.

This catalog uses two special reference number formats, one to indicate parts in a service assembly and another to indicate the quantity of a given part in an illustration.

### Service Assembly Reference Numbers

Parts in service assemblies have reference numbers in the form a:b. The a represents the reference number of the entire service assembly and the b represents a sequential number unique to each part within the service assembly.

For example, a wheel assembly might be identified by reference number 6, the tire by 6:1, the valve by 6:2, and the wheel by 6:3. When you order the assembly identified by reference number 6, you receive all parts identified by reference numbers 6:1,6:2, and 6:3. However, you may also order any part individually. Reference numbers of this type appear in illustration and in parts lists.

### Reference Numbers Indicating Quantity

In an illustration, if a reference number indicates more than one part, the reference number has the form nX y. The n represents the quantity of the part, the X is the multiplication symbol, and the y represents the reference number.

For example, in an illustration, the reference number 2X 37 means that two of the parts identified by reference number 37 are indicated.

# Contents

Frame Assembly . . . . . 4
Lift Arm Assembly No. 2 . . . . . 6
Lift Arm Assembly No. 3 . . . . . 8
Lift Arm Assembly No. 1 . . . . . 10
Tire and Axle Assembly . . . . . 12
LH Torsion Axle Assembly No. 137-3572 . . . . . 14
RH Torsion Axle Assembly No. 137-3573 . . . . . 16
Gearbox and Driveshaft Assembly . . . . . 18
Main Driveshaft Assembly No. 138-9039 . . . . . 20
Rear Driveshaft Assembly No. 138-9040 . . . . . 22
Side Driveshaft Assembly No. 138-9041 . . . . . 24
Deck Assembly . . . . . 26
Blade, Pulley and Spindle Assembly . . . . . 28
Deck Assembly No. 138-9026 . . . . . 30
Double Spindle Assembly No. 137-3541 . . . . . 32
High Spindle Assembly No. 137-3542 . . . . . 34
Low Spindle Assembly No. 137-3543 . . . . . 36
Deck Mount and Deck Cover Assembly . . . . . 38
Hydraulic Assembly . . . . . 40
Attachments and Accessories . . . . . 42

**© 2020—The Toro® Company**
**8111 Lyndale Avenue South**
**Bloomington, MN 55420**



**Contact us at www.Toro.com.**
**Printed in the USA.**
**All Rights Reserved**

# Frame Assembly

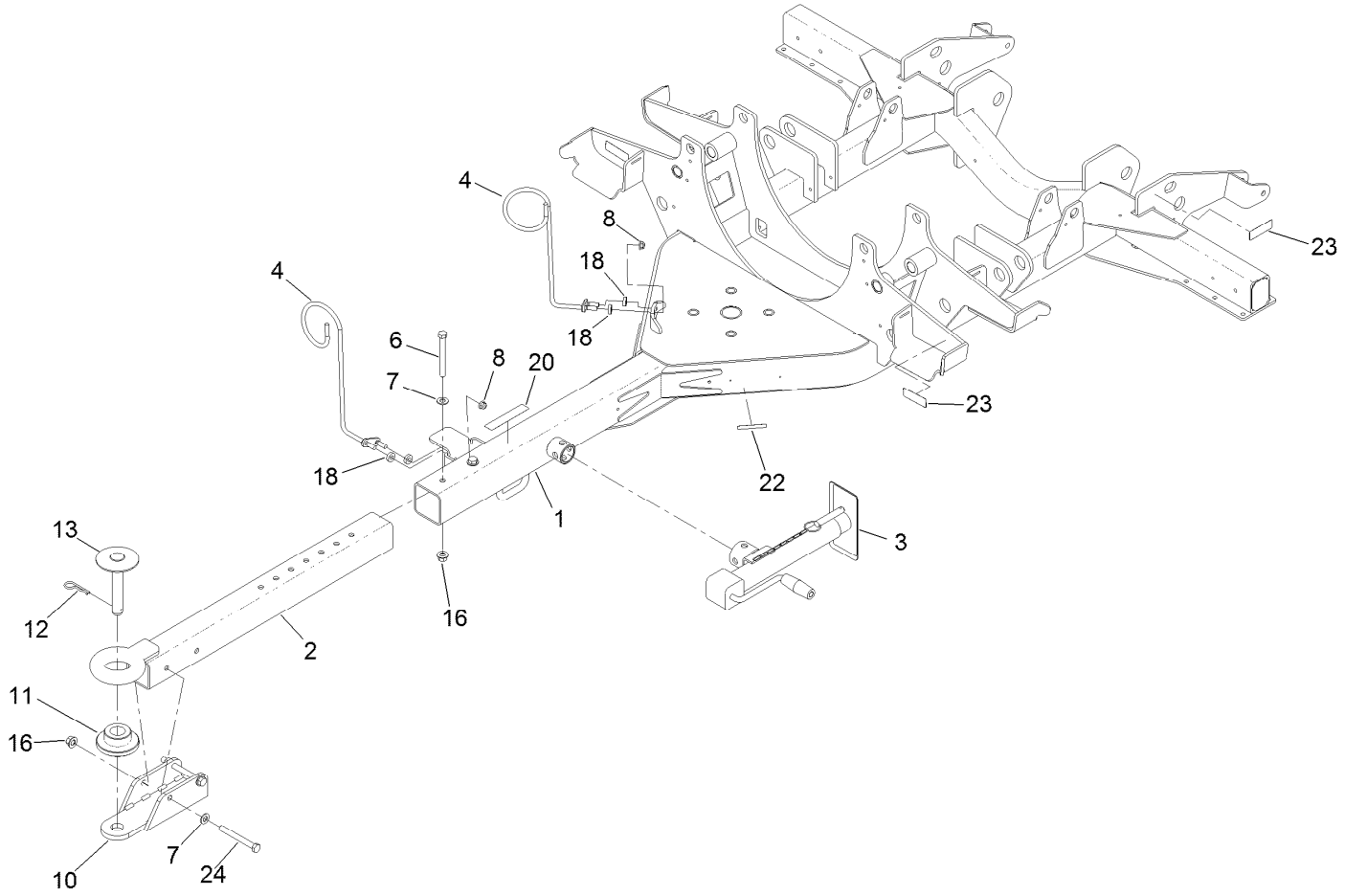

# Frame Assembly (continued)

| Ref. | Part Number | Qty. | Description |
|---|---|---|---|
| 1 | 137-3501-01 | 1 | Frame ASM |
| 2 | 137-3578-01 | 1 | Hitch ASM |
| 3 | T0000-3423 | 1 | Jack-Sidewind |
| 4 | 119-3920 | 2 | Guide-Hose, RH |
| 6 | 325-18 | 2 | Screw-HH |
| 7 | 3256-26 | 4 | Washer-Flat |
| 8 | 104-8301 | 4 | Nut-HF, NI |
| 10 | 140-0015-01 | 1 | Clevis ASM |
| 11 | 140-0013 | 1 | Bushing-Flange, Uhmwpe |
| 12 | 3290-343 | 1 | Pin-Hair |
| 13 | 140-0037 | 1 | Hitch Pin ASM |
| 16 | 99-5107 | 4 | Nut-Lock |
| 18 | 5-0652 | 4 | Spacer |
| 20 | 110-4668 | 1 | Decal-Warning, PTO |
| 22 | 133-8061 | 1 | Decal-Warning |
| 23 | 120-0625 | 4 | Decal-Warning |
| 24 | 325-19 | 2 | Screw-HH |

# Lift Arm Assembly No. 2

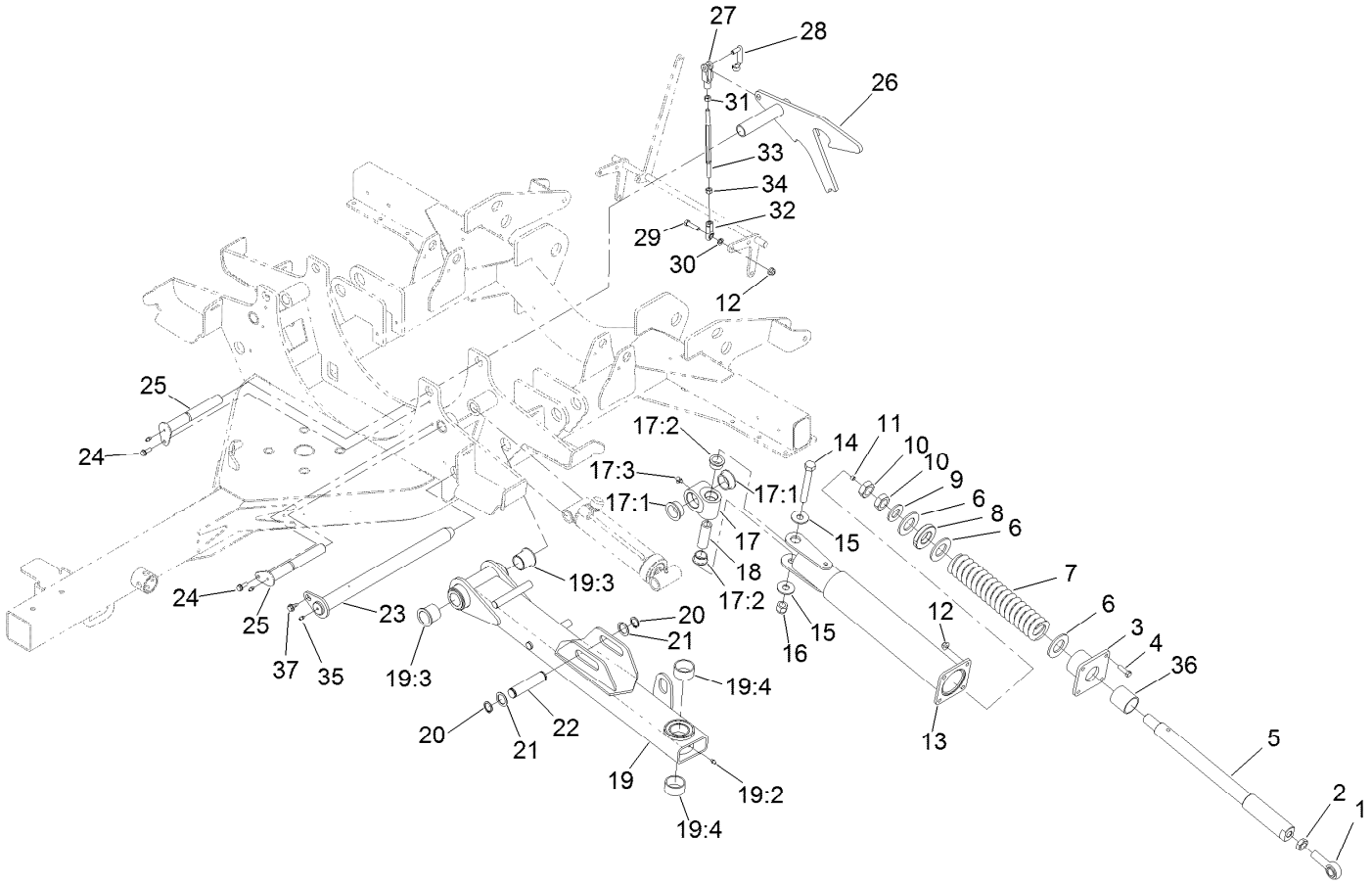

# Lift Arm Assembly No. 2 (continued)

| Ref. | Part Number | Qty. | Description |
|---|---|---|---|
| 1 | 105-2806 | 1 | End-Rod |
| 2 | 3220-7 | 1 | Nut-Jam |
| 3 | 114-5677-03 | 1 | Housing |
| 4 | 323-7 | 4 | Screw-HH |
| 5 | 117-9404 | 1 | Shaft-Spring |
| 6 | 114-5986 | 3 | Washer-Plain |
| 7 | 114-5993 | 1 | Spring-Compression |
| 8 | 114-5992 | 1 | Bearing-Plastic |
| 9 | 3256-62 | 1 | Washer-Flat |
| 10 | 3220-9 | 2 | Nut-Jam |
| 11 | 285-17 | 1 | Plug-Pipe |
| 12 | 104-8301 | 5 | Nut-HF, NI |
| 13 | 137-3599-01 | 1 | Arm-Impact |
| 14 | 327-23 | 1 | Screw-HH |
| 15 | 3256-7 | 2 | Washer-Flat |
| 16 | 3296-53 | 1 | Nut-Lock, NI |
| 17 | 115-5468 | 1 | Pivot Hub ASM |
| 17:1 | 115-5469 | 2 | Bushing-Flange |
| 17:2 | 114-5680 | 2 | Bushing-Flange |
| 17:3 | 302-60 | 1 | Fitting-Grease |
| 18 | 94-6604 | 1 | Tube-Spacer |
| 19 | 137-3562 | 1 | #2 Lift Arm ASM |
| 19:2 | 302-5 | 1 | Fitting-Grease |
| 19:3 | 69-6470 | 2 | Bushing-Caster |
| 19:4 | 114-5596 | 2 | Bushing-Straight |
| 20 | 32151-36 | 2 | Ring-Retaining |
| 21 | 10-8110 | 2 | Washer-Thrust |
| 22 | 138-5272 | 1 | Pin-Cylinder |
| 23 | 137-3604 | 1 | Pin-Arm, Lift |
| 24 | 32144-41 | 2 | Screw-Taptite |
| 25 | 138-6330 | 2 | Cylinder Pin ASM |
| 26 | 138-3068 | 1 | LH Wing Latch ASM |
| 27 | 1-633131 | 1 | Yoke-Linkage, Brake |
| 28 | 103-2399 | 1 | Pin-Spring, Clevis |
| 29 | 323-8 | 1 | Screw-HH |
| 30 | 3253-21 | 1 | Washer-Lock |
| 31 | 3219-3 | 1 | Nut-Hex |
| 32 | 103-1167 | 1 | Joint-Ball End, LH |
| 33 | 137-3692 | 1 | Rod-Adjuster, Wing |
| 34 | 3219-20 | 1 | Nut-Hex, LH |
| 35 | 302-5 | 1 | Fitting-Grease |
| 36 | 114-5989 | 1 | Bushing-Plain |
| 37 | 99-5105 | 1 | Screw-Shoulder |

# Lift Arm Assembly No. 3

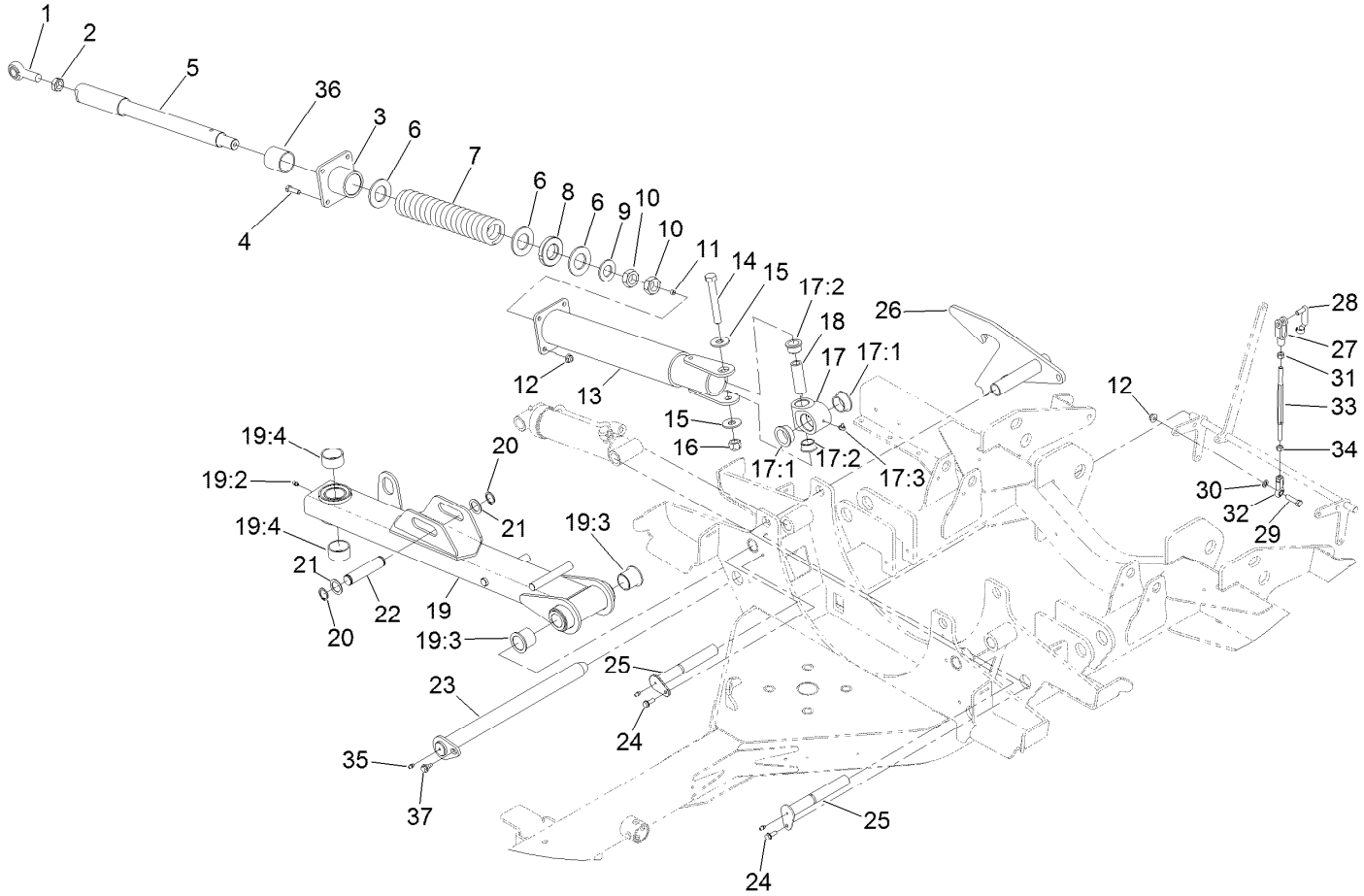

# Lift Arm Assembly No. 3 (continued)

| Ref. | Part Number | Qty. | Description |
|---|---|---|---|
| 1 | 105-2806 | 1 | End-Rod |
| 2 | 3220-7 | 1 | Nut-Jam |
| 3 | 114-5677-03 | 1 | Housing |
| 4 | 323-7 | 4 | Screw-HH |
| 5 | 117-9404 | 1 | Shaft-Spring |
| 6 | 114-5986 | 3 | Washer-Plain |
| 7 | 114-5993 | 1 | Spring-Compression |
| 8 | 114-5992 | 1 | Bearing-Plastic |
| 9 | 3256-62 | 1 | Washer-Flat |
| 10 | 3220-9 | 2 | Nut-Jam |
| 11 | 285-17 | 1 | Plug-Pipe |
| 12 | 104-8301 | 5 | Nut-HF, NI |
| 13 | 137-3599-01 | 1 | Arm-Impact |
| 14 | 327-23 | 1 | Screw-HH |
| 15 | 3256-7 | 2 | Washer-Flat |
| 16 | 3296-53 | 1 | Nut-Lock, NI |
| 17 | 115-5468 | 1 | Pivot Hub ASM |
| 17:1 | 115-5469 | 2 | Bushing-Flange |
| 17:2 | 114-5680 | 2 | Bushing-Flange |
| 17:3 | 302-60 | 1 | Fitting-Grease |
| 18 | 94-6604 | 1 | Tube-Spacer |
| 19 | 137-3563 | 1 | #3 Lift Arm ASM |

| Ref. | Part Number | Qty. | Description |
|---|---|---|---|
| 19:2 | 302-5 | 1 | Fitting-Grease |
| 19:3 | 69-6470 | 2 | Bushing-Caster |
| 19:4 | 114-5596 | 2 | Bushing-Straight |
| 20 | 32151-36 | 2 | Ring-Retaining |
| 21 | 10-8110 | 2 | Washer-Thrust |
| 22 | 138-5272 | 1 | Pin-Cylinder |
| 23 | 137-3604 | 1 | Pin-Arm, Lift |
| 24 | 32144-41 | 2 | Screw-Taptite |
| 25 | 138-6330 | 2 | Cylinder Pin ASM |
| 26 | 138-3069 | 1 | RH Wing Latch ASM |
| 27 | 1-633131 | 1 | Yoke-Linkage, Brake |
| 28 | 103-2399 | 1 | Pin-Spring, Clevis |
| 29 | 323-8 | 1 | Screw-HH |
| 30 | 3253-21 | 1 | Washer-Lock |
| 31 | 3219-3 | 1 | Nut-Hex |
| 32 | 103-1167 | 1 | Joint-Ball End, LH |
| 33 | 137-3692 | 1 | Rod-Adjuster, Wing |
| 34 | 3219-20 | 1 | Nut-Hex, LH |
| 35 | 302-5 | 1 | Fitting-Grease |
| 36 | 114-5989 | 1 | Bushing-Plain |
| 37 | 99-5105 | 1 | Screw-Shoulder |

# Lift Arm Assembly No. 1

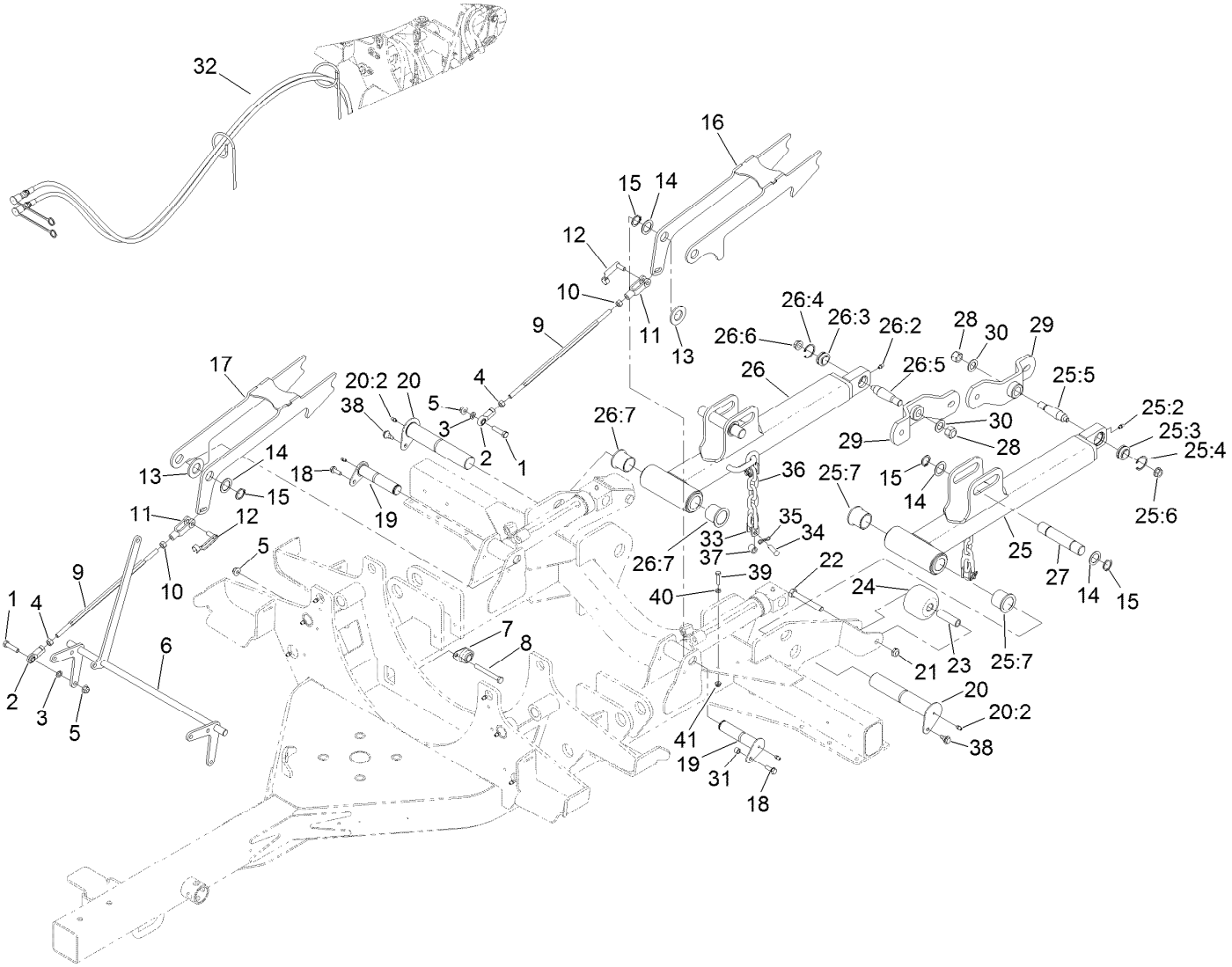

# Lift Arm Assembly No. 1 (continued)

| Ref. | Part Number | Qty. | Description |
|---|---|---|---|
| 1 | 323-8 | 2 | Screw-HH |
| 2 | 103-1167 | 2 | Joint-Ball End, LH |
| 3 | 3253-21 | 2 | Washer-Lock |
| 4 | 3219-20 | 2 | Nut-Hex, LH |
| 5 | 104-8301 | 6 | Nut-HF, NI |
| 6 | 137-3688-03 | 1 | Latch Shaft ASM |
| 7 | 256-236 | 2 | Bearing-Mount, Flange |
| 8 | 323-20 | 4 | Screw-HH |
| 9 | 137-3691 | 2 | Rod-Adjuster, Rear |
| 10 | 3219-3 | 2 | Nut-Hex |
| 11 | 1-633131 | 2 | Yoke-Linkage, Brake |
| 12 | 103-2399 | 2 | Pin-Spring, Clevis |
| 13 | 3256-62 | 2 | Washer-Flat |
| 14 | 10-8110 | 6 | Washer-Thrust |
| 15 | 32151-36 | 6 | Ring-Retaining |
| 16 | 140-0007 | 1 | LH Rear Latch ASM |
| 17 | 140-0008 | 1 | RH Rear Latch ASM |
| 18 | 32144-41 | 2 | Screw-Taptite |
| 19 | 138-6331 | 2 | Lift Arm Pin ASM |
| 20 | 138-6332 | 2 | Lift Arm Pin ASM |
| 20:2 | 302-5 | 1 | Fitting-Grease |
| 21 | 3296-45 | 2 | Nut-Hex |
| 22 | 325-15 | 2 | Screw-HH |
| 23 | 115-2144 | 2 | Tube-Spacer |
| 24 | 115-3366 | 2 | Roller |
| 25 | 137-3561 | 1 | #1 Lift Arm LH ASM |
| 25:2 | 302-5 | 1 | Fitting-Grease |
| 25:3 | 105-7441 | 1 | Bearing-Spherical |
| 25:4 | 32151-34 | 1 | Ring-Retaining |
| 25:5 | 105-7468 | 1 | Stud-Tapered |
| 25:6 | 32128-42 | 1 | Nut-HF |
| 25:7 | 69-6470 | 2 | Bushing-Caster |
| 26 | 137-3584 | 1 | #1 Lift Arm RH ASM |
| 26:2 | 302-5 | 1 | Fitting-Grease |
| 26:3 | 105-7441 | 1 | Bearing-Spherical |
| 26:4 | 32151-34 | 1 | Ring-Retaining |
| 26:5 | 105-7468 | 1 | Stud-Tapered |
| 26:6 | 32128-42 | 1 | Nut-HF |
| 26:7 | 69-6470 | 2 | Bushing-Caster |
| 27 | 137-3617 | 2 | Pin-Cylinder |
| 28 | 3296-41 | 2 | Nut-Lock NI |
| 29 | 137-3581-01 | 2 | Hub Support ASM |
| 30 | 86-1440 | 2 | Washer-Flat |
| 31 | 105-5723 | 2 | Spacer-Tube |
| 32 | 20-9580 | 1 | Rope-Latch |
| 33 | 5-2942 | 4 | Shackle |
| 34 | 283-42 | 4 | Pin-Clevis |
| 35 | 119-1415 | 4 | Pin-Cotter, Locking |
| 36 | 138-5274 | 2 | Chain-6 Link |
| 37 | 75-5270 | 2 | Spacer-Knob, Seat |
| 38 | 99-5105 | 2 | Screw-Shoulder |
| 39 | 114-0282 | 2 | Screw-HH |
| 40 | 3218-1 | 2 | Nut-Jam |
| 41 | 104-7201 | 2 | Nut-HF |

# Tire and Axle Assembly

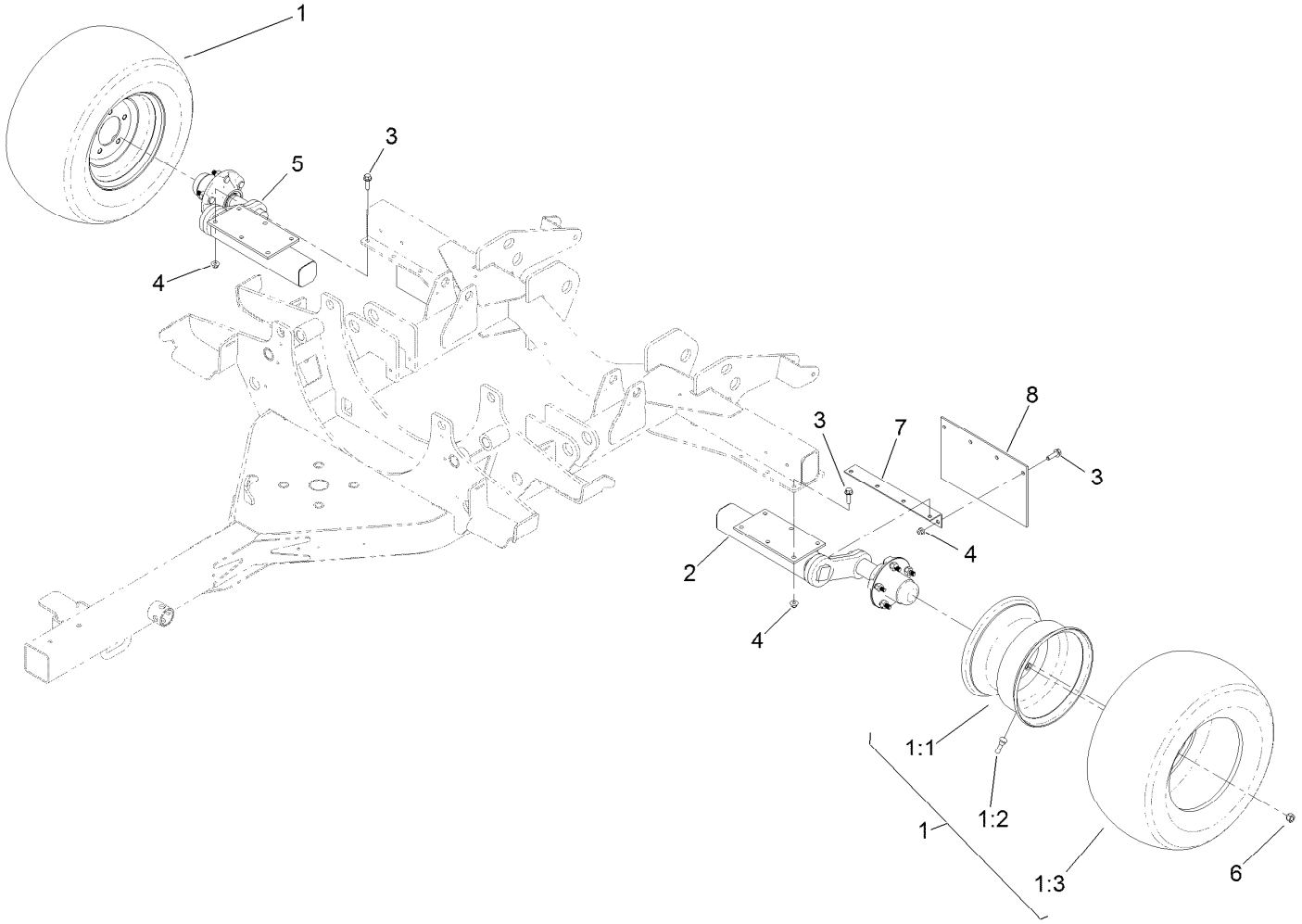

# Tire and Axle Assembly (continued)

| Ref. | Part Number | Qty. | Description |
|---|---|---|---|
| 1 | 137-3571 | 2 | Tire ASM |
| 1:1 | 115-1573 | 1 | Rim |
| 1:2 | 232-27 | 1 | Stem-Valve |
| 1:3 | 120-8910 | 1 | Tire-Off Road |
| 2 | 137-3572 | 1 | LH Torsion Axle ASM |
| 3 | 3234-24 | 20 | Screw-HHF |
| 4 | 104-8301 | 20 | Nut-HF, NI |
| 5 | 137-3573 | 1 | RH Torsion Axle ASM |
| 6 | 242-35 | 10 | Nut-Wheel |
| 7 | 138-9006-03 | 2 | Bracket-Flap |
| 8 | 138-9007 | 2 | Flap-Rubber |

# LH Torsion Axle Assembly No. 137-3572

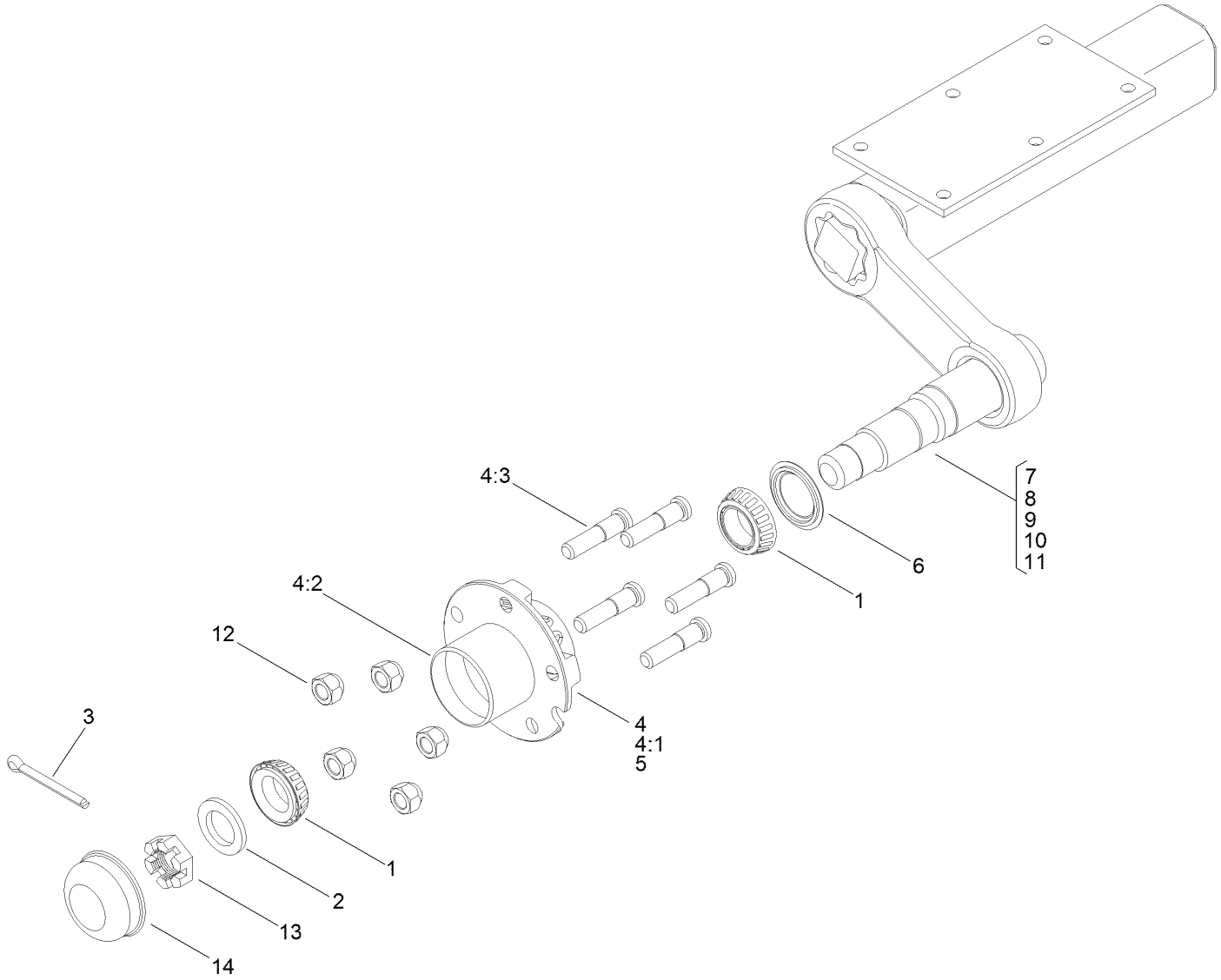

# LH Torsion Axle Assembly No. 137-3572 (continued)

| Ref. | Part Number | Qty. | Description |
|---|---|---|---|
| 1 | 254-62 | 2 | Bearing-Roller, Cone |
| 2 | 137-3596 | 1 | Washer-Spindle |
| 3 | 3272-18 | 1 | Pin-Cotter |
| 4 | 119-6001 | 1 | Hub ASM |
| 4:1 | | 1 | Hub ● |
| 4:2 | 115-9471 | 2 | Bearing-Cup |
| 4:3 | 69-2990 | 5 | Stud-Wheel |
| 5 | | 1 | Grease ● |
| 6 | 137-3595 | 1 | Seal |
| 7 | | 1 | Tube And Bracket ASM ● |
| 8 | | 4 | Cord-Rubber ● |
| 9 | | 1 | Sticker-Rubber, Torsion ● |
| 10 | | 1 | Sticker-Axle, Serial Tag ● |
| 11 | | 1 | Idler ● |
| 12 | 242-35 | 5 | Nut-Wheel |
| 13 | 119-6005 | 1 | Nut-Slotted, Hex |
| 14 | 119-6004 | 1 | Cap-Dust |

● Not serviced separately

# RH Torsion Axle Assembly No. 137-3573

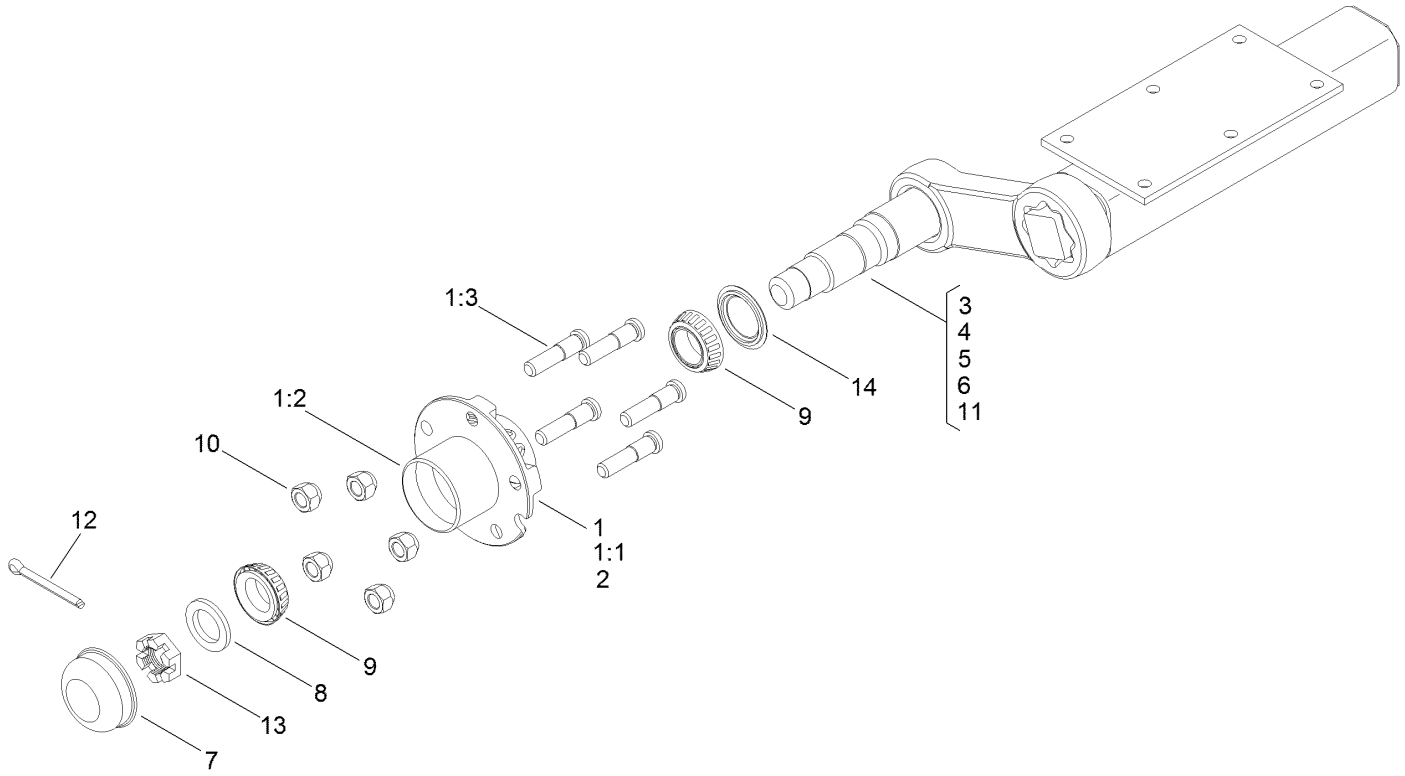

# RH Torsion Axle Assembly No. 137-3573 (continued)

| Ref. | Part Number | Qty. | Description |
|---|---|---|---|
| 1 | 119-6001 | 1 | Hub ASM |
| 1:1 | | 1 | Hub ● |
| 1:2 | 115-9471 | 2 | Bearing-Cup |
| 1:3 | 69-2990 | 5 | Stud-Wheel |
| 2 | | 1 | Grease ● |
| 3 | | 1 | Sticker-Axle, Serial Tag ● |
| 4 | | 1 | Tube And Bracket ASM ● |
| 5 | | 4 | Cord-Rubber ● |
| 6 | | 1 | Sticker-Rubber, Torsion ● |
| 7 | 119-6004 | 1 | Cap-Dust |
| 8 | 137-3596 | 1 | Washer-Spindle |
| 9 | 254-62 | 2 | Bearing-Roller, Cone |
| 10 | 242-35 | 5 | Nut-Wheel |
| 11 | | 1 | Idler ● |
| 12 | 3272-18 | 1 | Pin-Cotter |
| 13 | 119-6005 | 1 | Nut-Slotted, Hex |
| 14 | 137-3595 | 1 | Seal |

● Not serviced separately

# Gearbox and Driveshaft Assembly

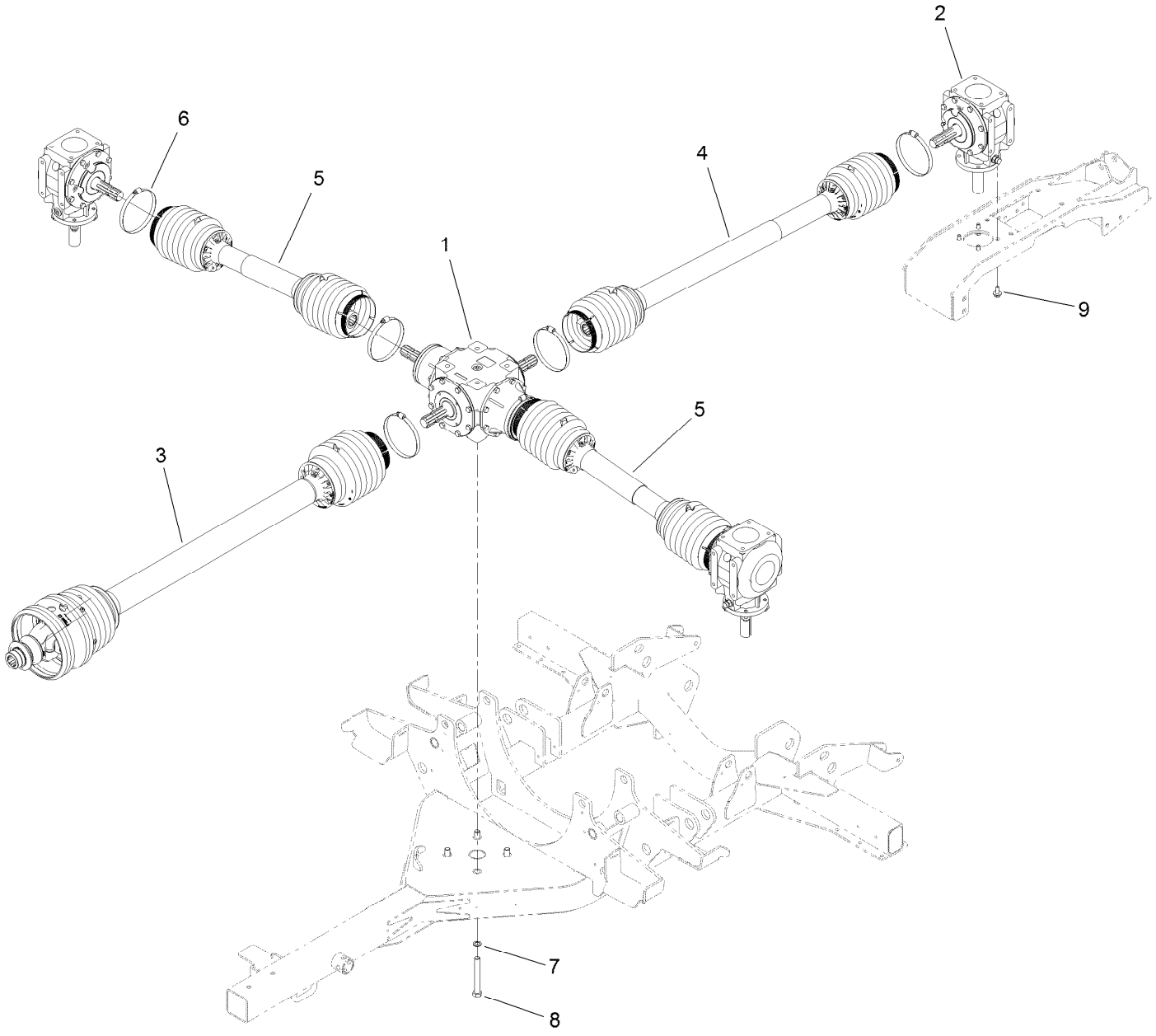

# Gearbox and Driveshaft Assembly (continued)

| Ref. | Part Number | Qty. | Description |
|---|---|---|---|
| 1 | 139-3154 | 1 | Gearbox-Center |
| 2 | 139-3153 | 3 | Gearbox-Deck |
| 3 | 138-9039 | 1 | Driveshaft-Main |
| 4 | 138-9040 | 1 | Driveshaft-Rear |
| 5 | 138-9041 | 2 | Driveshaft-Side |
| 6 | 138-9005 | 7 | Clamp-Hose |
| 7 | 3256-69 | 4 | Washer-Flat |
| 8 | 327-11 | 4 | Screw-HH |
| 9 | 33106-025 | 12 | Screw-HHF |
| 99 | 138-9038 | 4 | Decal-Danger, Entanglement ● |

● Not illustrated

# Main Driveshaft Assembly No. 138-9039

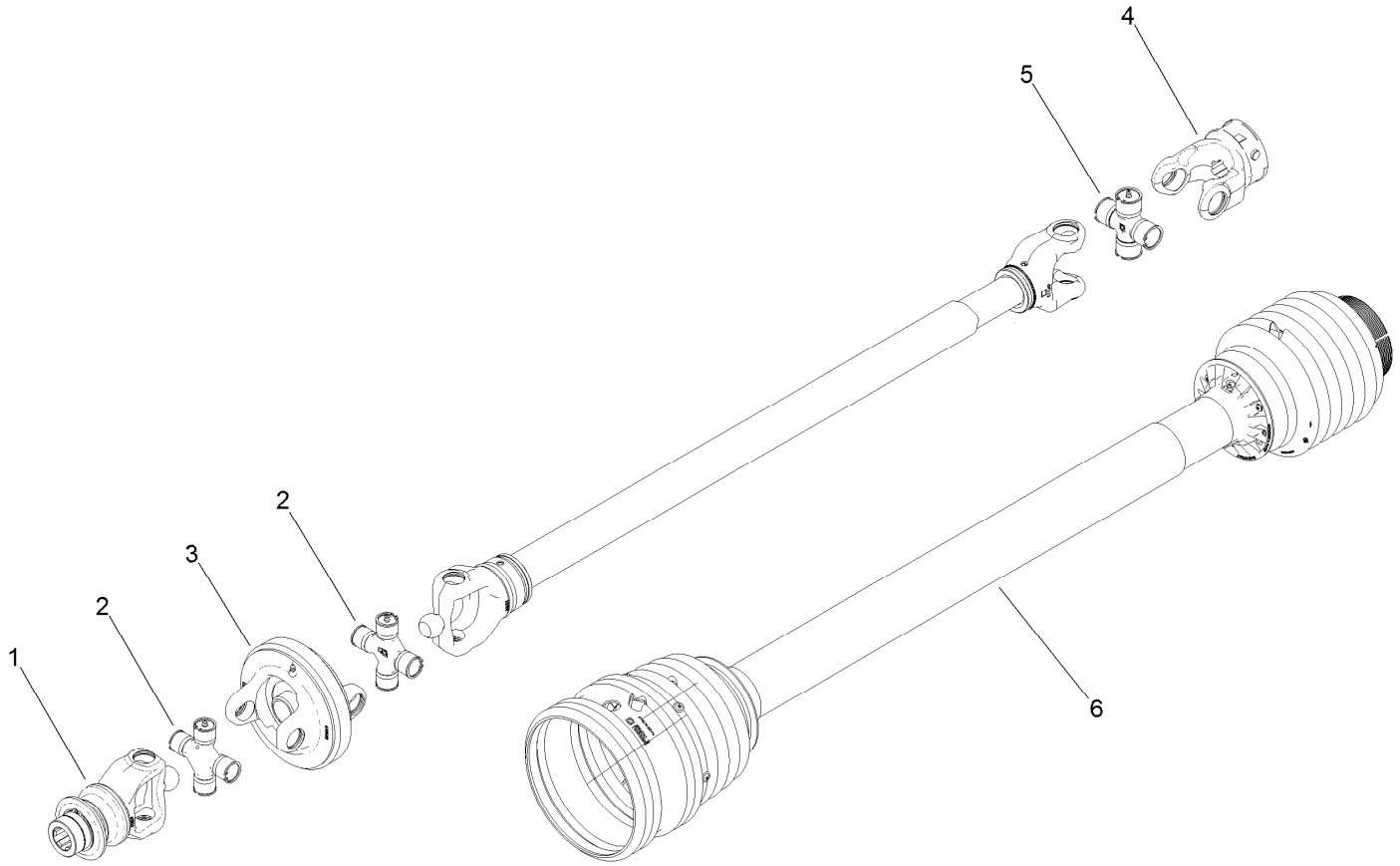

# Main Driveshaft Assembly No. 138-9039 (continued)

| Ref. | Part Number | Qty. | Description |
|---|---|---|---|
| 1 | 138-9045 | 1 | Yoke-Cv |
| 2 | 138-9043 | 2 | Cv Cross Kit |
| 3 | 138-9046 | 1 | Body-Cv |
| 4 | 138-9047 | 1 | Yoke |
| 5 | 138-9044 | 1 | Cross Kit |
| 6 | 138-9042 | 1 | Shield-Shaft, Main |
| 99 | 119-3113 | 2 | Chain-Safety ● |

● Not illustrated

# Rear Driveshaft Assembly No. 138-9040

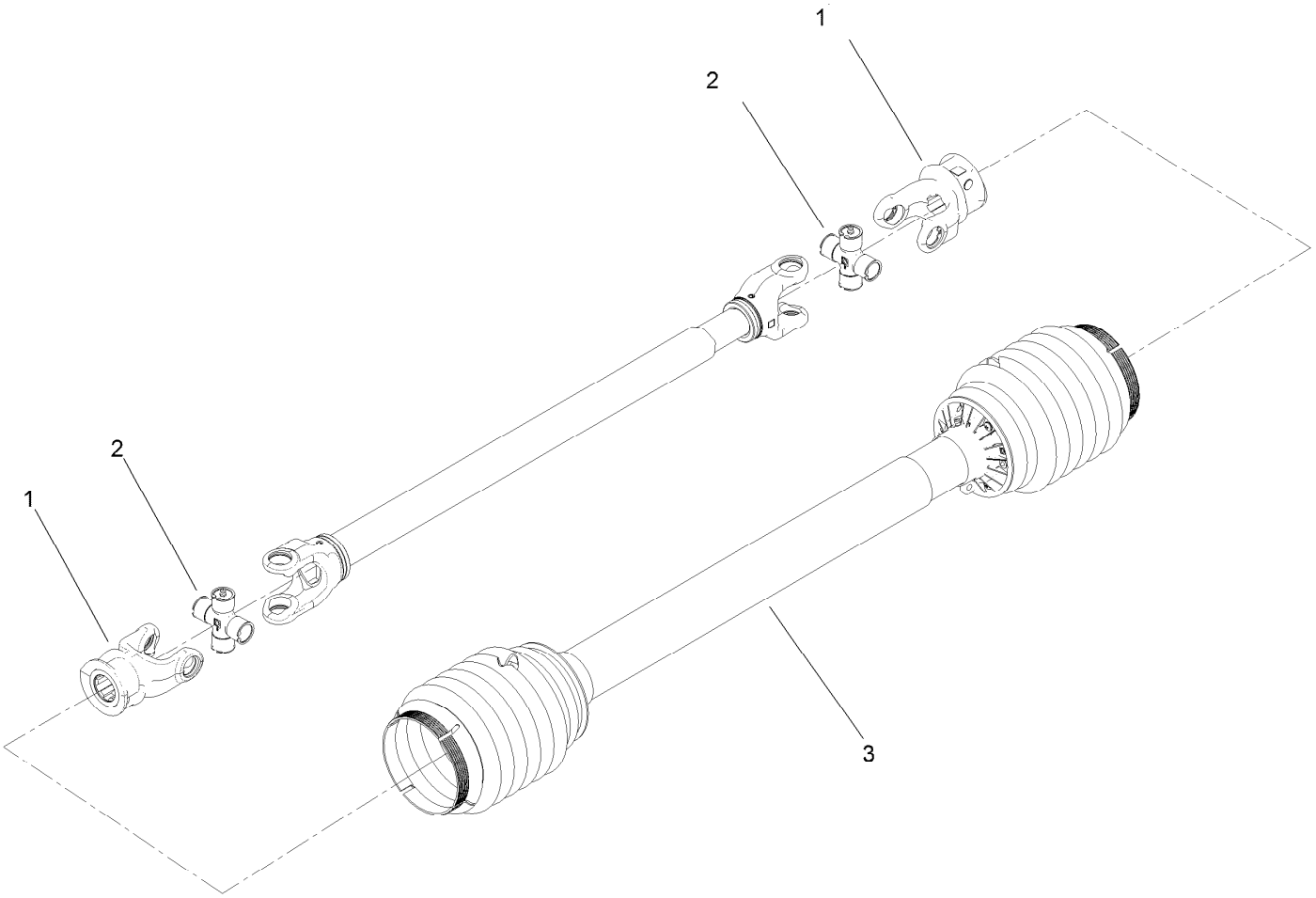

# Rear Driveshaft Assembly No. 138-9040 (continued)

| Ref. | Part Number | Qty. | Description |
|---|---|---|---|
| 1 | 139-3150 | 2 | Yoke |
| 2 | 138-9049 | 2 | Cross Kit |
| 3 | 139-3151 | 1 | Shield-Shaft, Rear |
| 99 | 119-3113 | 2 | Chain-Safety ● |

● Not illustrated

# Side Driveshaft Assembly No. 138-9041

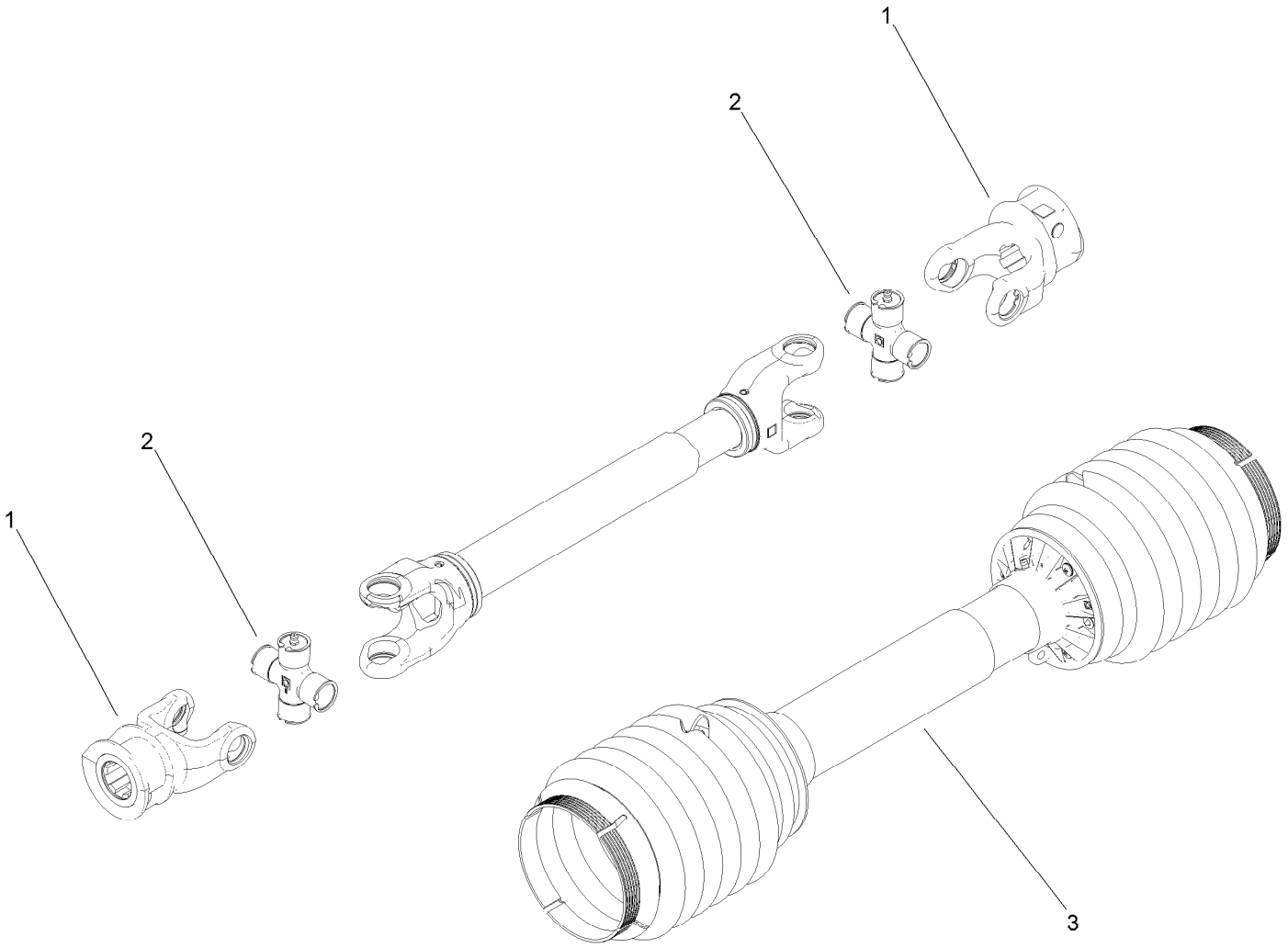

# Side Driveshaft Assembly No. 138-9041 (continued)

| Ref. | Part Number | Qty. | Description |
|---|---|---|---|
| 1 | 139-3150 | 2 | Yoke |
| 2 | 138-9049 | 2 | Cross Kit |
| 3 | 139-3152 | 1 | Shield-Shaft, Side |
| 99 | 119-3113 | 2 | Chain-Safety ● |

● Not illustrated

# Deck Assembly

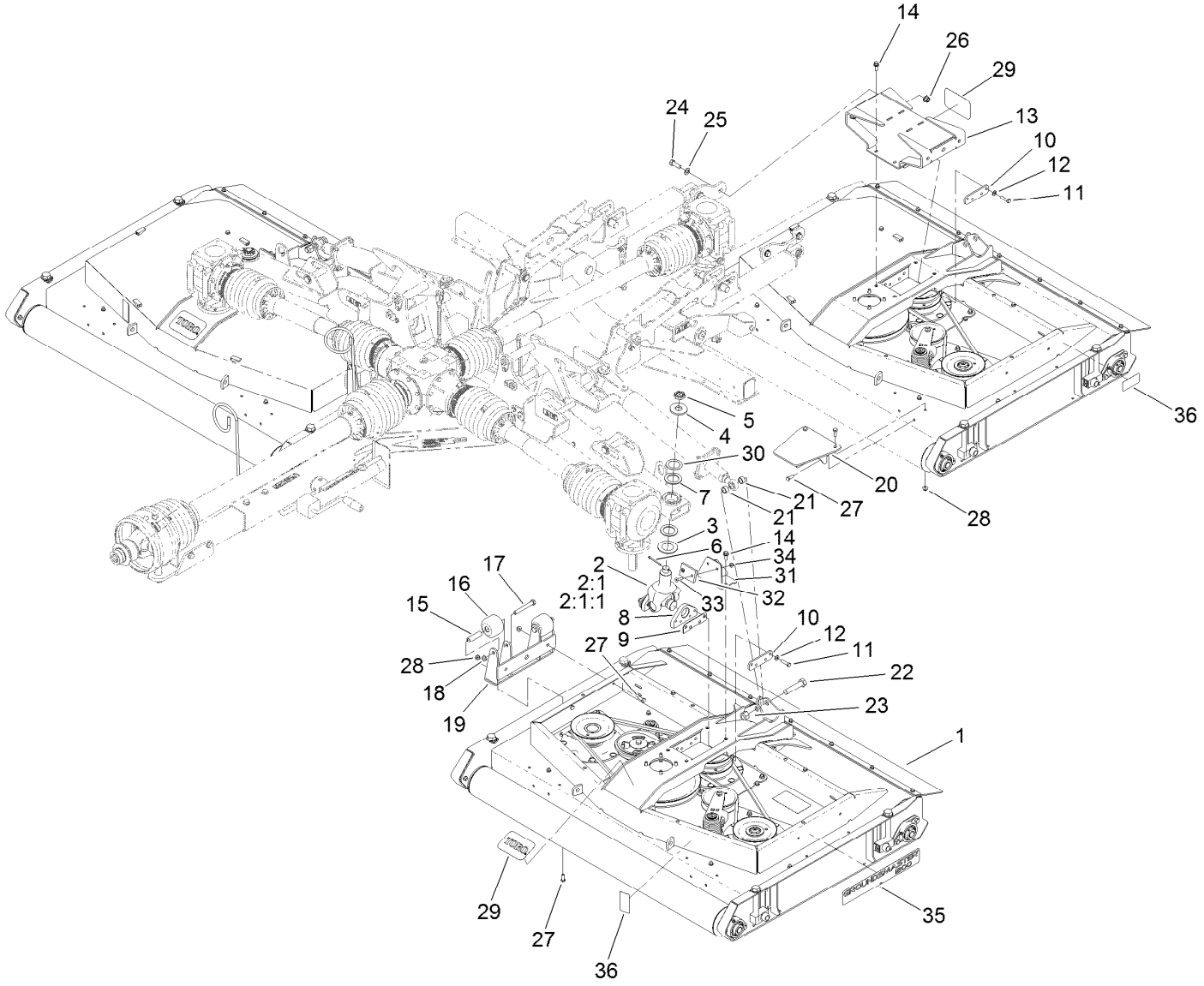

# Deck Assembly (continued)

| Ref. | Part Number | Qty. | Description |
|---|---|---|---|
| 1 | | 3 | Deck ASM ● |
| 2 | 114-5640-03 | 2 | Joint Yoke ASM |
| 2:1 | | 1 | Yoke-Joint ● |
| 2:1:1 | 104-4299 | 1 | Cross And Bearing Kit |
| 3 | 104-0720 | 2 | Spacer |
| 4 | 104-0719 | 2 | Washer-Hardened |
| 5 | 99-3139 | 2 | Nut-Slotted |
| 6 | 3272-25 | 2 | Pin-Cotter |
| 7 | 104-0721 | 4 | Washer-Thrust |
| 8 | 137-3699-03 | 4 | Mount-Base |
| 9 | 104-0731 | 4 | Shim |
| 10 | 139-3161 | 6 | Plate-Spacer |
| 11 | 323-43 | 20 | Screw-HH |
| 12 | 100-4852 | 20 | Washer-Hardened |
| 13 | 137-3675-03 | 1 | Mount-Deck |
| 14 | 3234-42 | 8 | Screw-HHF |
| 15 | 115-2144 | 4 | Tube-Spacer |
| 16 | 115-3366 | 4 | Roller |
| 17 | 325-15 | 4 | Screw-HH |
| 18 | 3296-45 | 4 | Nut-Hex |
| 19 | 137-3680-01 | 2 | Roller-Kicker |
| 20 | 137-3696-01 | 2 | Plate-Kicker |
| 21 | 74-3730 | 4 | Spacer-Spindle, Rear |
| 22 | 328-5 | 2 | Screw-HH |
| 23 | 3296-51 | 2 | Nut-Lock, NI |
| 24 | 325-6 | 4 | Screw-HH |
| 25 | 3256-26 | 4 | Washer-Flat |
| 26 | 99-5107 | 4 | Nut-Lock |
| 27 | 323-6 | 16 | Screw-HH |
| 28 | 104-8301 | 16 | Nut-HF, NI |
| 29 | 127-1653 | 3 | Decal |
| 30 | 114-5641 | 2 | Washer-Thrust |
| 31 | 138-9000-03 | 2 | Stop-Deck |
| 32 | 69-9290 | 2 | Pad-Bumper |
| 33 | 32108-103 | 4 | Screw-FH |
| 34 | 104-8300 | 4 | Nut-HF, NI |
| 35 | 138-3085 | 2 | Decal |
| 36 | 125-6110 | 4 | Decal-Danger |

● Not serviced separately

# Blade, Pulley and Spindle Assembly

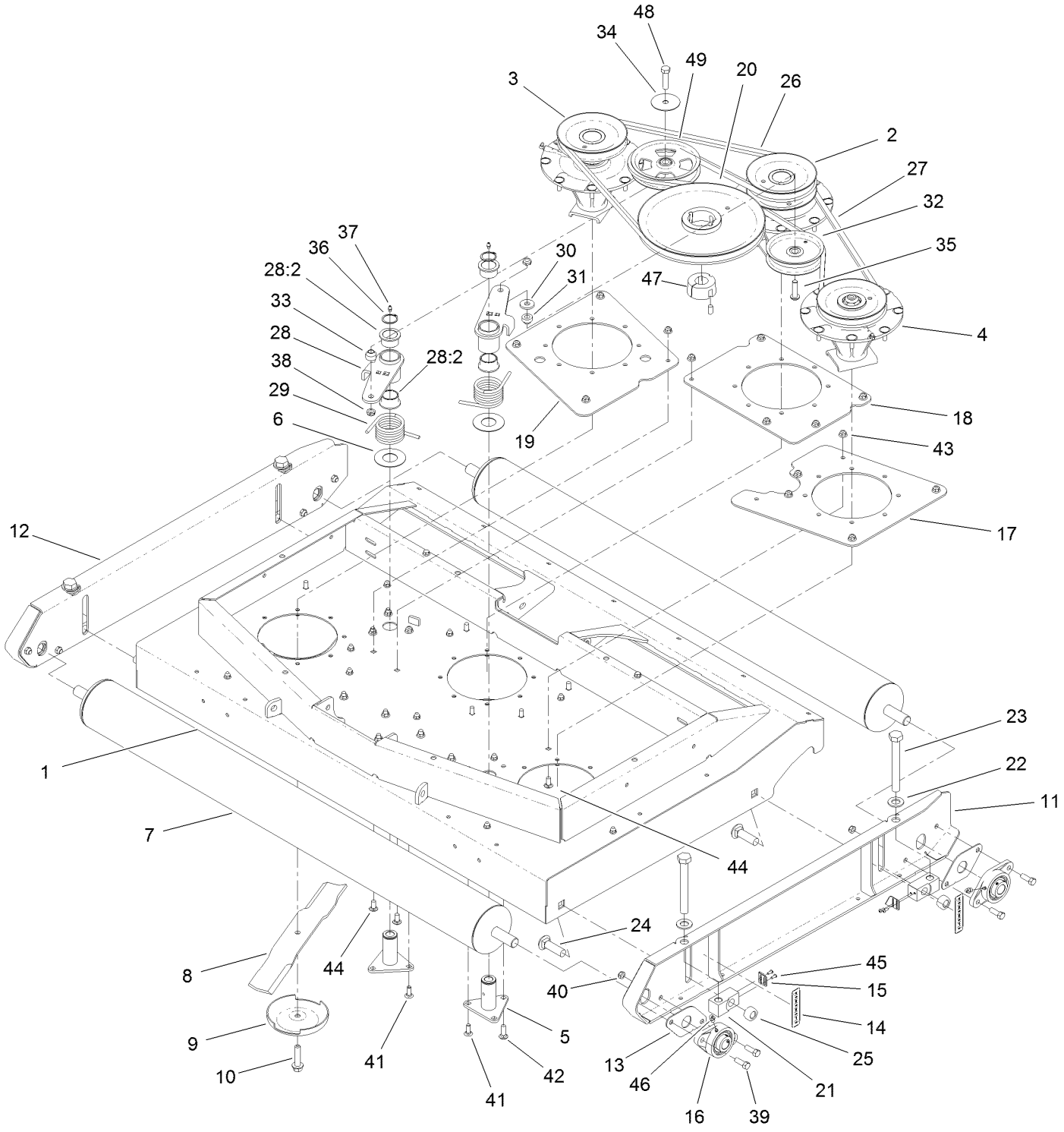

# Blade, Pulley and Spindle Assembly (continued)

| Ref. | Part Number | Qty. | Description |
|---|---|---|---|
| 1 | 138-9026 | 1 | Deck Shell ASM |
| 2 | 137-3541 | 1 | Double Spindle ASM |
| 3 | 137-3542 | 1 | High Spindle ASM |
| 4 | 137-3543 | 1 | Low Spindle ASM |
| 5 | 114-0997 | 2 | Pivot-Idler |
| 6 | 108-1926 | 2 | Washer |
| 7 | 140-0016 | 2 | Roller ASM |
| 8 | 137-3659-03 | 3 | Blade-Lift, Medium |
| 9 | 72-9361 | 3 | Cup-Scalp, Anti |
| 10 | 104-2444 | 3 | Bolt-Blade, LH Thread |
| 11 | 138-3083-01 | 1 | Skid-LH |
| 12 | 138-3084-01 | 1 | Skid-RH |
| 13 | 138-5271 | 4 | Shim-Bearing |
| 14 | 138-3087 | 4 | Decal-HOC |
| 15 | 138-3098 | 4 | Indicator-HOC |
| 16 | 138-5270 | 4 | Bearing-Flange, 2 Bolt |
| 17 | 137-3635-01 | 1 | Plate-Doubler, LH |
| 18 | 137-3636-01 | 1 | Plate-Doubler, Center |
| 19 | 137-3637-01 | 1 | Plate-Doubler, RH |
| 20 | 138-5283 | 1 | Pulley-Drive |
| 21 | 138-3086 | 4 | Block-HOC |
| 22 | 3256-28 | 4 | Washer-Flat |
| 23 | 137-3648 | 4 | Screw-HHCS |
| 24 | HDW17555 | 4 | Bolt-Carriage |
| 25 | 138-3092 | 4 | Nut-Hex |

| Ref. | Part Number | Qty. | Description |
|---|---|---|---|
| 26 | 137-3644 | 1 | Belt-V |
| 27 | 137-3645 | 1 | Belt-V |
| 28 | 137-3649 | 2 | Idler Arm ASM |
| 28:2 | 93-4510 | 2 | Bushing-Caster |
| 29 | 112-7395 | 2 | Spring-Torsion |
| 30 | 92-2651 | 1 | Washer |
| 31 | 121-5274 | 1 | Spacer-Idler |
| 32 | 1-613098 | 1 | Pulley-Idler |
| 33 | 69-6970 | 1 | Spacer-Idler, Flat |
| 34 | 100-3102 | 1 | Washer-Flat |
| 35 | 108-1993 | 1 | Screw-HSBH |
| 36 | 32120-84 | 2 | Ring-Snap, External |
| 37 | 302-5 | 2 | Fitting-Grease |
| 38 | 3296-45 | 2 | Nut-Hex |
| 39 | 324-5 | 8 | Screw-HH |
| 40 | 126-9780 | 8 | Nut-Lock |
| 41 | 3231-22 | 4 | Screw-CARR |
| 42 | 3231-25 | 2 | Bolt-CARR |
| 43 | 104-8301 | 43 | Nut-HF, NI |
| 44 | 3231-27 | 13 | Screw-CARR |
| 45 | 115-9830 | 8 | Screw-HSBH |
| 46 | 302-33 | 4 | Fitting-Grease |
| 47 | 137-3660 | 1 | Bushing-Taperlock |
| 48 | 325-8 | 1 | Screw-HH |
| 49 | 132-9421 | 1 | Pulley-Idler, Flat |

# Deck Assembly No. 138-9026

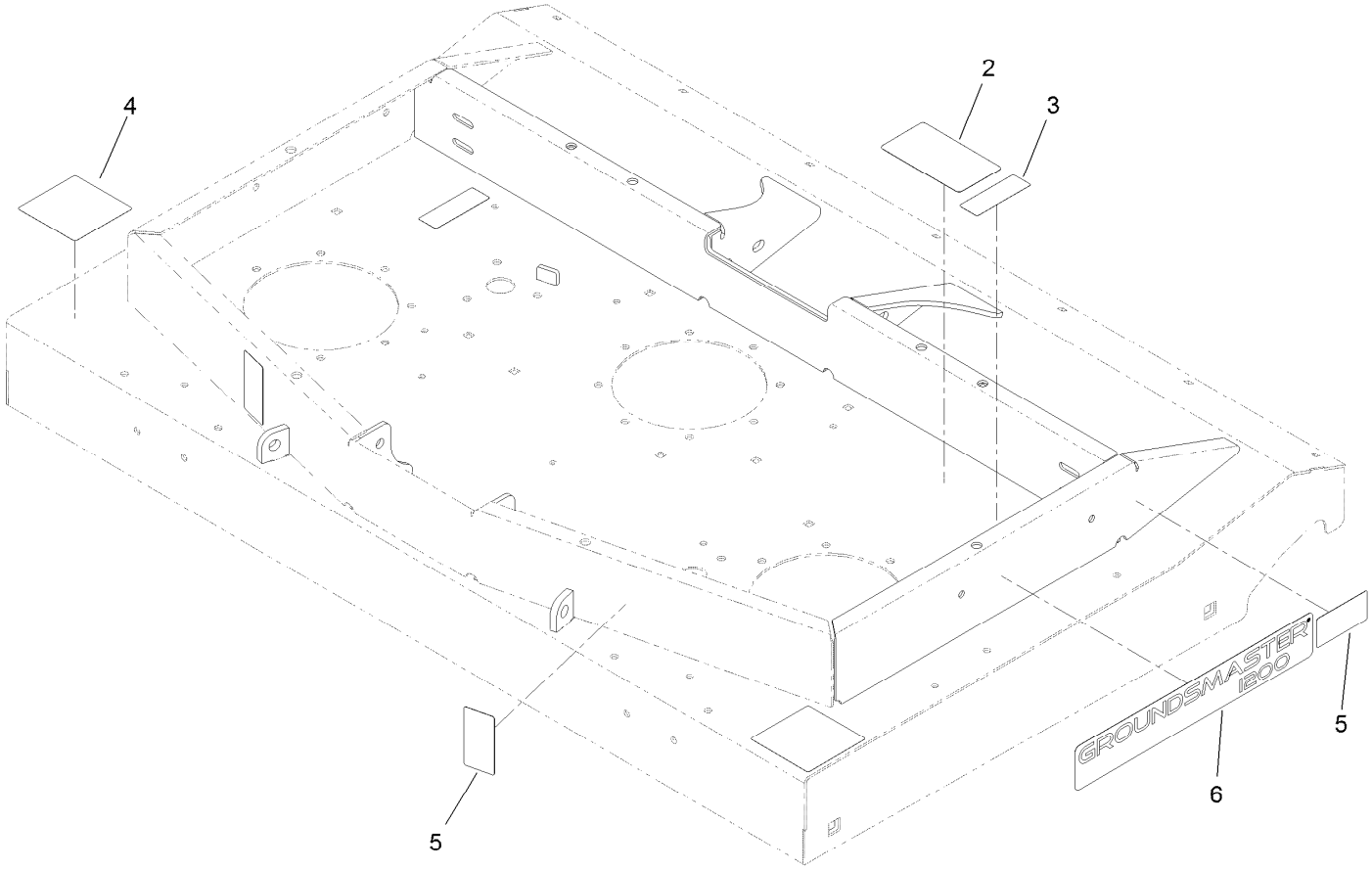

# Deck Assembly No. 138-9026 (continued)

| Ref. | Part Number | Qty. | Description |
|---|---|---|---|
| 2 | 138-3078 | 1 | Decal-Routing, Belt |
| 3 | 117-4979 | 2 | Decal-Warning |
| 4 | 120-6604 | 2 | Decal-Danger |
| 5 | 125-6110 | 4 | Decal-Danger |
| 6 | 138-3085 | 2 | Decal |

# Double Spindle Assembly No. 137-3541

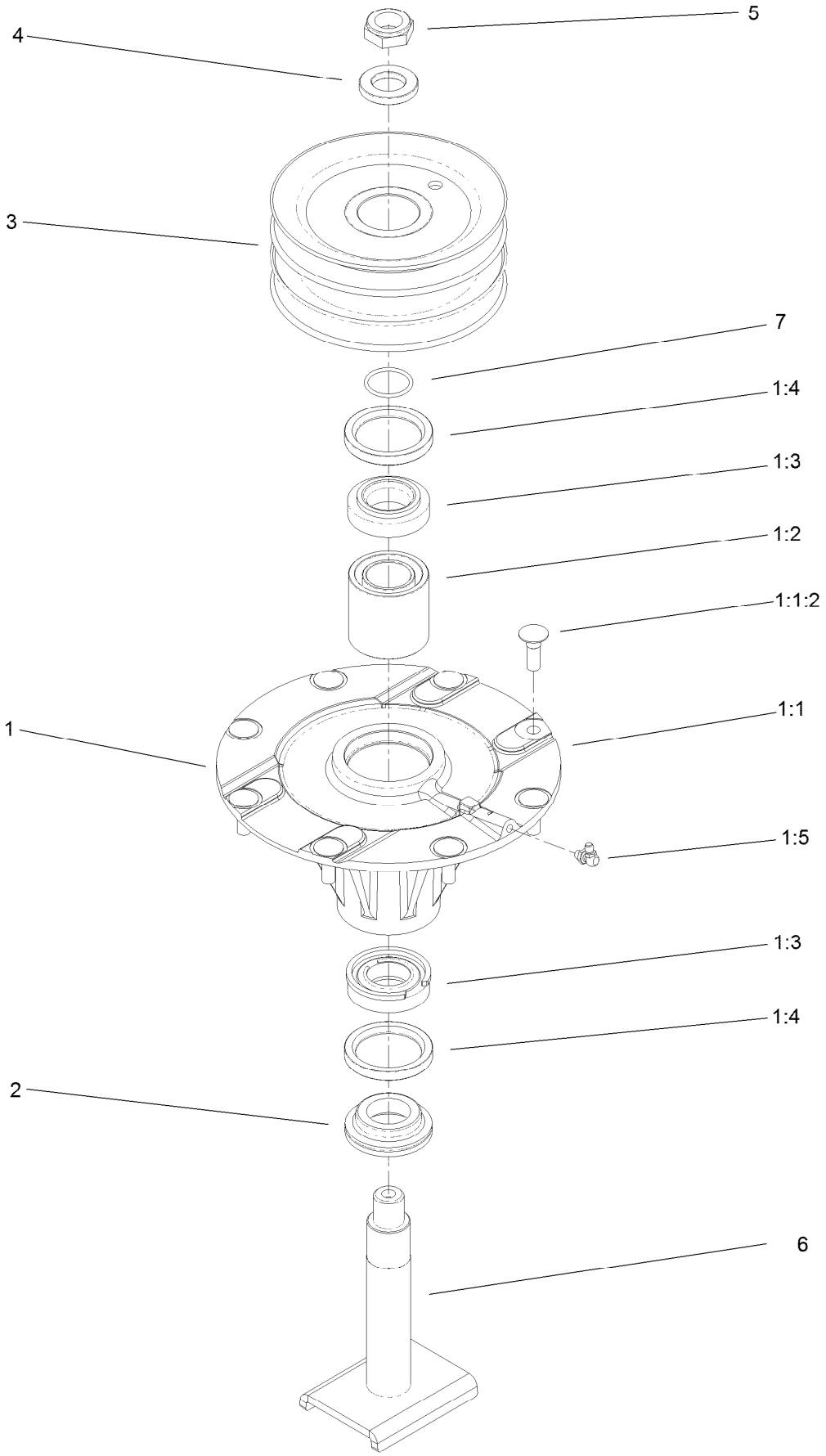

# Double Spindle Assembly No. 137-3541 (continued)

| Ref. | Part Number | Qty. | Description |
|---|---|---|---|
| 1 | 119-4777 | 1 | Spindle ASM |
| 1:1 | | 1 | Spindle ASM ● |
| 1:1:2 | 114-8195 | 8 | Bolt-Neck, Ribbed |
| 1:2 | 108-1954 | 1 | Bearing Spacer Set |
| 1:3 | 110-8297 | 1 | Bearing ASM |
| 1:4 | 253-154 | 2 | Seal-Oil |
| 1:5 | 302-60 | 1 | Fitting-Grease |
| 2 | 69-6950 | 1 | Spacer-Shaft, Spindle |
| 3 | 137-3622 | 1 | Double Pulley ASM |
| 4 | 120-5576 | 1 | Washer-Hardened |
| 5 | 3296-60 | 1 | Nut-Lock, NI |
| 6 | 137-3545 | 1 | Shaft-Spindle |
| 7 | 106-7159 | 1 | O-Ring |

● Not serviced separately

# High Spindle Assembly No. 137-3542

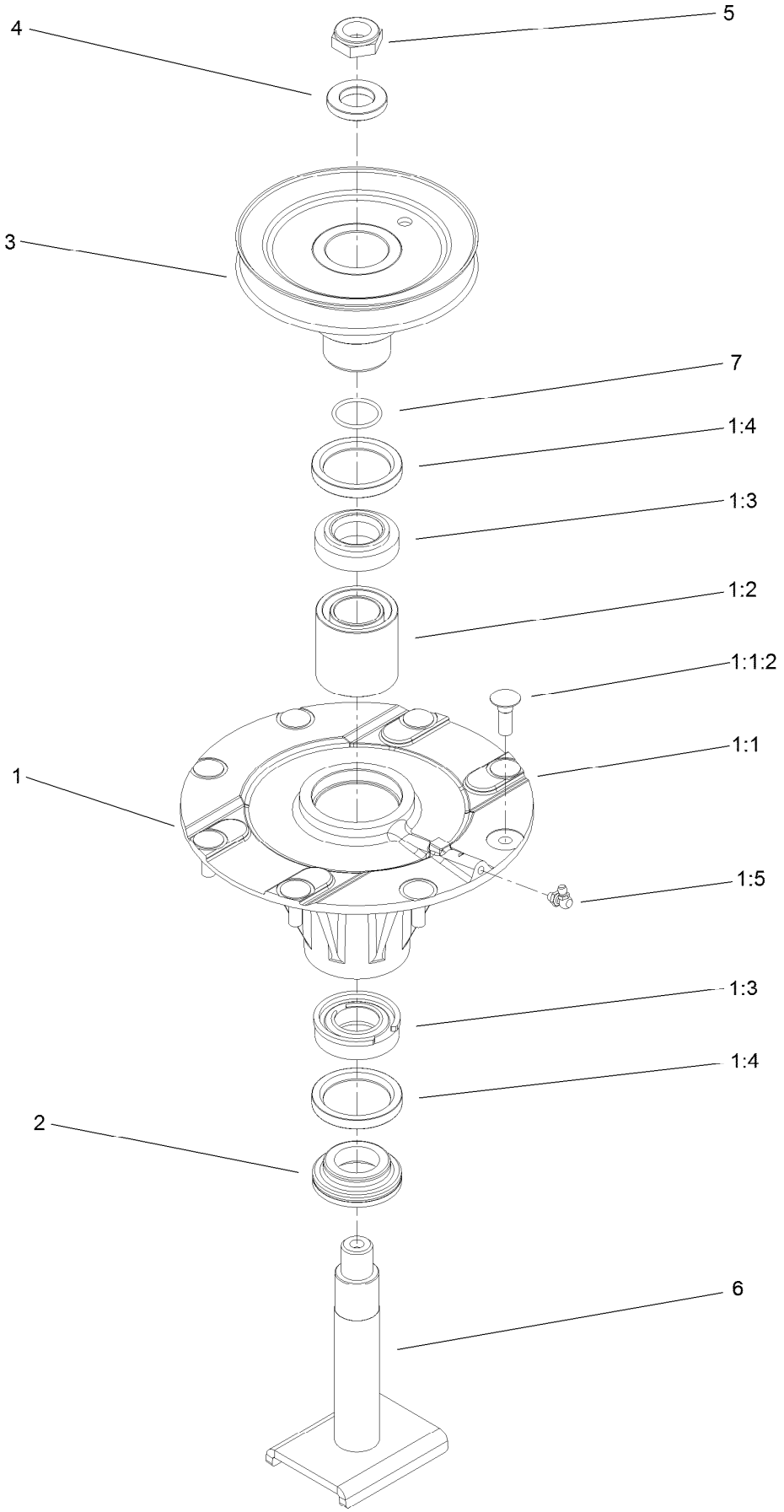

# High Spindle Assembly No. 137-3542 (continued)

| Ref. | Part Number | Qty. | Description |
|---|---|---|---|
| 1 | 119-4777 | 1 | Spindle ASM |
| 1:1 | | 1 | Spindle ASM ● |
| 1:1:2 | 114-8195 | 8 | Bolt-Neck, Ribbed |
| 1:2 | 108-1954 | 1 | Bearing Spacer Set |
| 1:3 | 110-8297 | 1 | Bearing ASM |
| 1:4 | 253-154 | 2 | Seal-Oil |
| 1:5 | 302-60 | 1 | Fitting-Grease |

| Ref. | Part Number | Qty. | Description |
|---|---|---|---|
| 2 | 69-6950 | 1 | Spacer-Shaft, Spindle |
| 3 | 137-3627 | 1 | Single Pulley ASM |
| 4 | 120-5576 | 1 | Washer-Hardened |
| 5 | 3296-60 | 1 | Nut-Lock, NI |
| 6 | 137-3545 | 1 | Shaft-Spindle |
| 7 | 106-7159 | 1 | O-Ring |

● Not serviced separately

# Low Spindle Assembly No. 137-3543

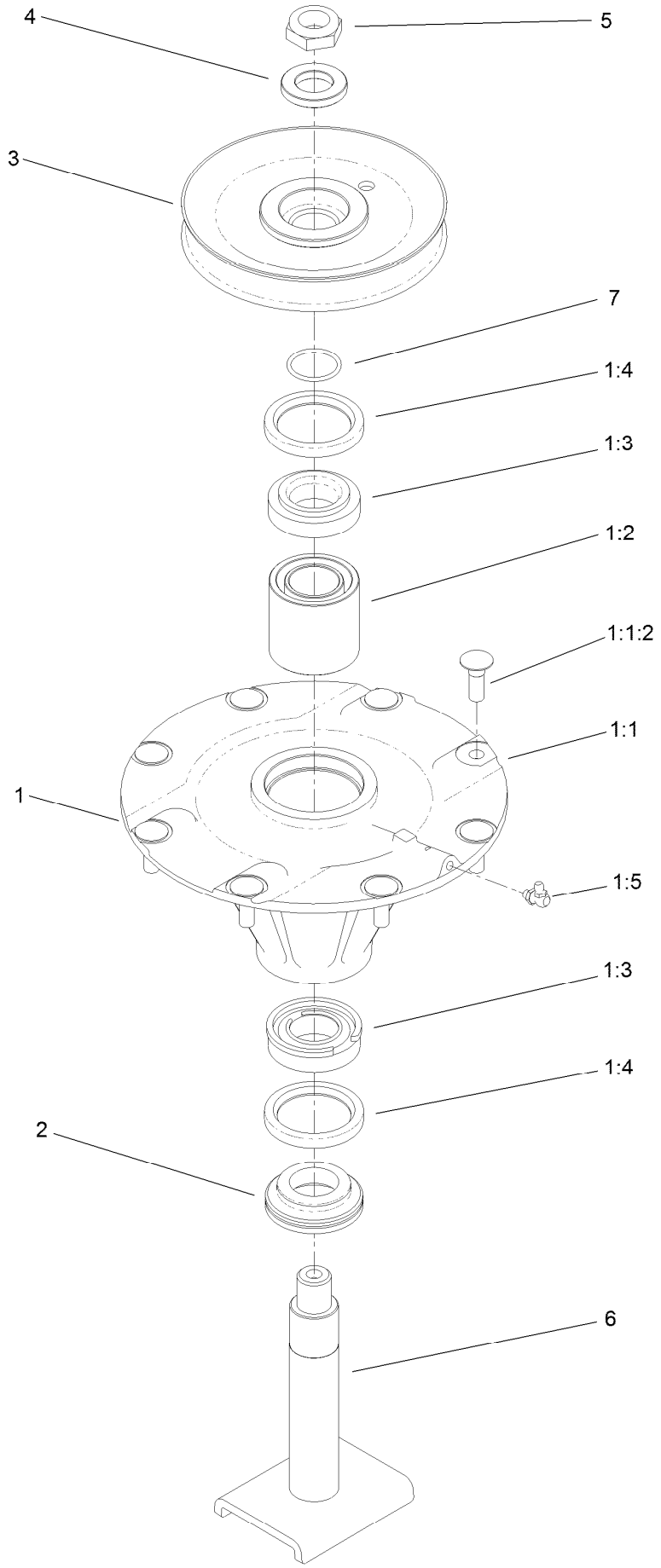

# Low Spindle Assembly No. 137-3543 (continued)

| Ref. | Part Number | Qty. | Description |
|---|---|---|---|
| 1 | 119-4777 | 1 | Spindle ASM |
| 1:1 | | 1 | Spindle ASM ● |
| 1:1:2 | 114-8195 | 8 | Bolt-Neck, Ribbed |
| 1:2 | 108-1954 | 1 | Bearing Spacer Set |
| 1:3 | 110-8297 | 1 | Bearing ASM |
| 1:4 | 253-154 | 2 | Seal-Oil |
| 1:5 | 302-60 | 1 | Fitting-Grease |

| Ref. | Part Number | Qty. | Description |
|---|---|---|---|
| 2 | 69-6950 | 1 | Spacer-Shaft, Spindle |
| 3 | 137-3629 | 1 | Pulley-Driven, Low |
| 4 | 120-5576 | 1 | Washer-Hardened |
| 5 | 3296-60 | 1 | Nut-Lock, NI |
| 6 | 137-3545 | 1 | Shaft-Spindle |
| 7 | 106-7159 | 1 | O-Ring |

● Not serviced separately

# Deck Mount and Deck Cover Assembly

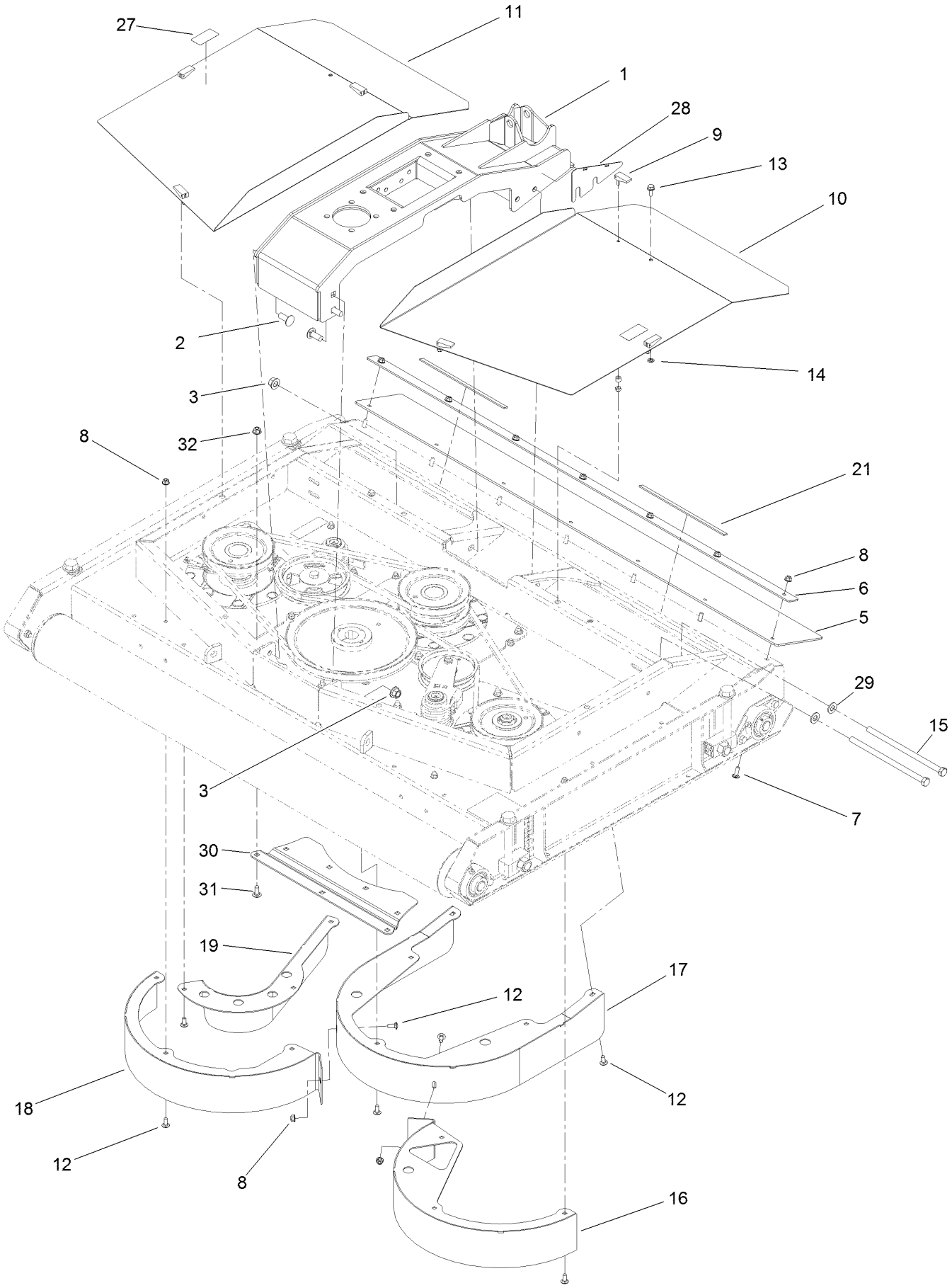

# Deck Mount and Deck Cover Assembly (continued)

| Ref. | Part Number | Qty. | Description |
|---|---|---|---|
| 1 | 137-3556-03 | 1 | Deck Mount ASM |
| 2 | 3233-26 | 4 | Screw-CARR, Short Neck |
| 3 | 99-5107 | 6 | Nut-Lock |
| 5 | 137-3646 | 1 | Flap-Rear |
| 6 | 137-3647-01 | 1 | Plate-Flap |
| 7 | 3230-10 | 7 | Bolt-CARR |
| 8 | 104-8300 | 23 | Nut-HF, NI |
| 9 | 74-5950 | 6 | Latch-Swell |
| 10 | 137-3519-03 | 1 | Cover-Deck, LH |
| 11 | 137-3520-03 | 1 | Cover-Deck, RH |
| 12 | 3230-23 | 16 | Screw-CARR |
| 13 | 3234-47 | 2 | Screw-HHF |
| 14 | 117-2749 | 2 | Nut-Push |
| 15 | 325-39 | 2 | Screw-HH |
| 16 | 137-3549-01 | 1 | LH Chamber ASM |
| 17 | 137-3550-01 | 1 | Center Chamber ASM |
| 18 | 137-3551-01 | 1 | RH Chamber ASM |
| 19 | 137-3665-01 | 1 | Baffle-Inner |
| 21 | 115-8827 | 2 | Foam-Strip |
| 27 | 119-6807 | 2 | Decal-Warning |
| 28 | 138-9027-03 | 2 | Shim-Mount, Deck |
| 29 | 3256-26 | 2 | Washer-Flat |
| 30 | 139-3156-01 | 1 | Stiffener-Deck |
| 31 | 3231-27 | 7 | Screw-CARR |
| 32 | 104-8301 | 7 | Nut-HF, NI |

# Hydraulic Assembly

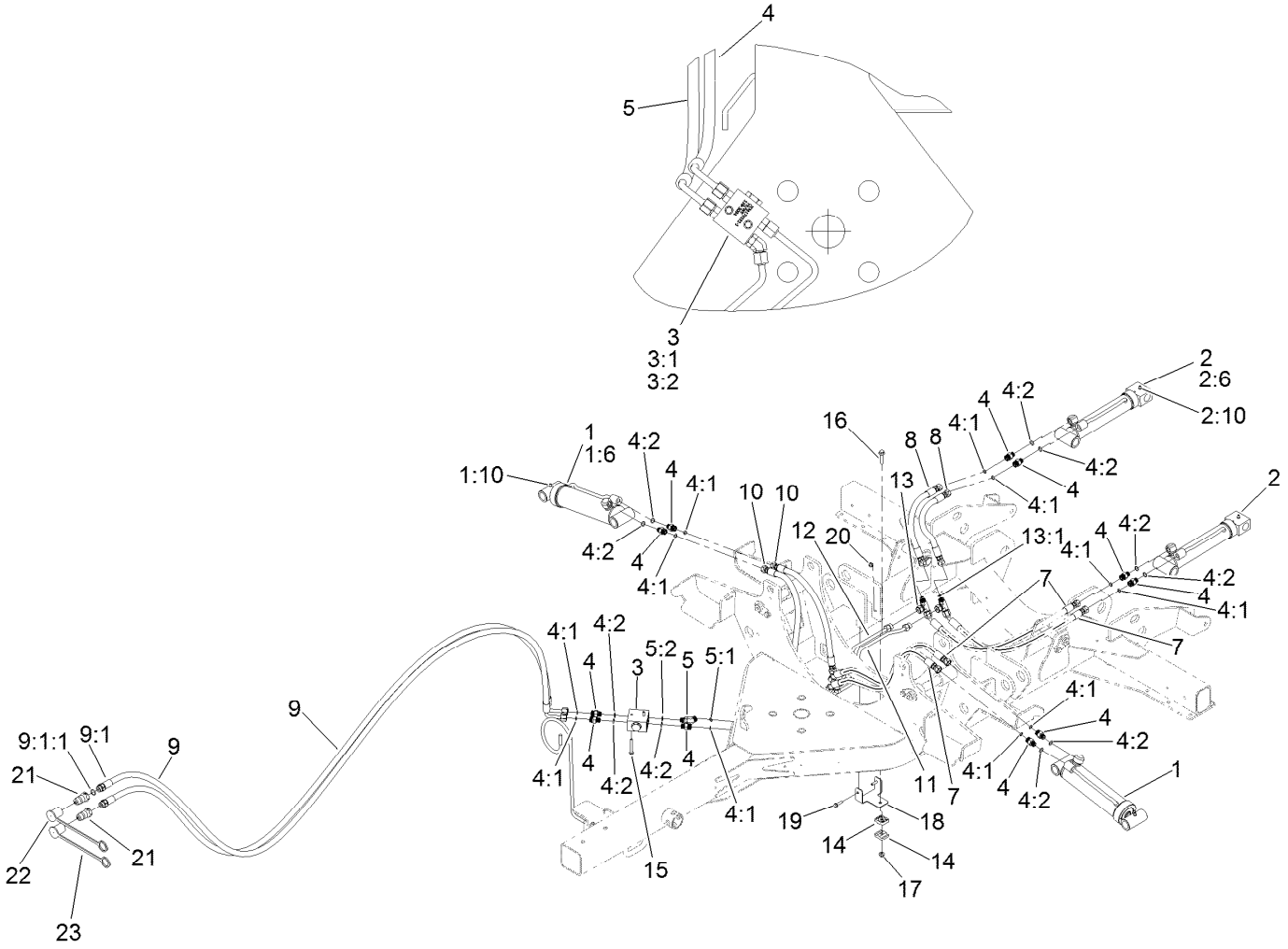

# Hydraulic Assembly (continued)

| Ref. | Part Number | Qty. | Description |
|---|---|---|---|
| 1 | 137-3570 | 2 | Cylinder ASM |
| 1:6 | 137-3608 | 1 | Kit-Seal |
| 1:10 | 302-5 | 1 | Fitting-Grease |
| 2 | 137-3598 | 2 | Cylinder ASM |
| 2:6 | 137-3609 | 1 | Kit-Seal |
| 2:10 | 302-5 | 1 | Fitting-Grease |
| 3 | 138-3094 | 1 | Manifold |
| 3:1 | | 1 | Manifold Block ■ |
| 3:2 | 110-8881 | 1 | Valve-Check |
| 3:2:1 | 105-9159 | 1 | Seal Kit ● |
| 4 | 340-2 | 11 | Fitting-Straight |
| 4:1 | 237-22 | 1 | O-Ring |
| 4:2 | 237-42 | 1 | O-Ring |
| 5 | 340-87 | 1 | Fitting-Elbow, 45 DEG |
| 5:1 | 237-22 | 1 | O-Ring |
| 5:2 | 237-42 | 1 | O-Ring |
| 7 | 105-9817 | 4 | Hose-HYD |
| 8 | 99-3576 | 2 | Hose-HYD |

| Ref. | Part Number | Qty. | Description |
|---|---|---|---|
| 9 | 138-5296 | 2 | Hose ASM |
| 9:1 | | 1 | Fitting-Straight, Rgd ■ |
| 9:1:1 | 237-79 | 1 | O-Ring |
| 10 | 138-5297 | 2 | Hose ASM |
| 11 | 138-3064 | 1 | Tube ASM |
| 12 | 138-3065 | 1 | Tube ASM |
| 13 | 340-166 | 2 | Fitting-Tee |
| 13:1 | 237-22 | 2 | O-Ring |
| 14 | 56-7973 | 2 | Clamp-Tube |
| 15 | 3234-34 | 2 | Screw-HHF |
| 16 | 115-1794 | 1 | Screw-HHF |
| 17 | 104-8300 | 1 | Nut-HF, NI |
| 18 | 138-3096-01 | 1 | Bracket-Hardline |
| 19 | 120-4654 | 2 | Screw-HHF |
| 20 | 104-7201 | 2 | Nut-HF |
| 21 | 133-7828 | 2 | Coupler-Connect, Quick |
| 22 | 138-3066 | 1 | Cap-Dust, Red |
| 23 | T56152152 | 1 | Cap-Connect, Quick |

● Not illustrated

■ Not serviced separately

# Attachments and Accessories

## For 31905 Groundsmaster 1200 Series Pull Behind Rotary Mower

| Product Name | Model/Part |
|---|---|
| High Lift Blades MVP Kit | 138-9028 |
| Standard Lift MVP Kit | 138-9029 |
| SMV KIT | 138-9030 |
| Fender Kit | 139-3174 |
| Blade Cover Kit | 139-3178 |
| Safety Chain Kit | 139-3179 |
| Homologation Kit | 31950 |

**Notes:**

TORO®

Count on it.