3310-432

TORO

19" H.P. MODEL NO. 16073–400001 & UP
21" H.P. MODEL NO. 16173–400001 & UP
21" S.P. MODEL NO. 16273–400001 & UP

PARTS CATALOG 13

19" AND 21" H.P. & S.P. FINGERTIP START

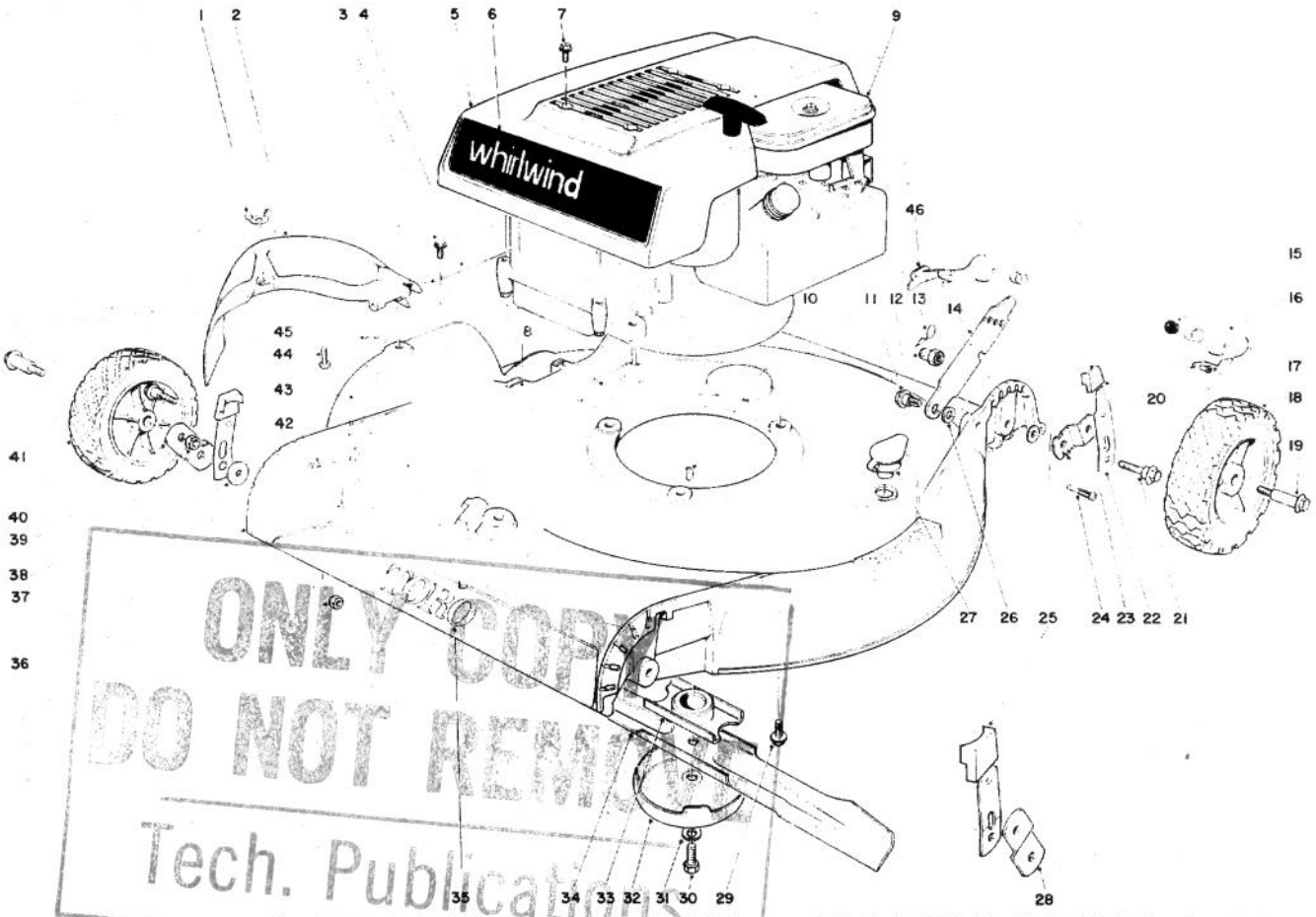

ONLY COPY
DO NOT REMOVE
Tech. Publications

HOUSING & ENGINE ASSEMBLY — MODELS 16073 & 16173

Ref. No.	Part No.	Description	No. Used
1	32103-14	Wing Nut	1
2	12-2270	Deflector	1
3	12-5450	Self-Tapping Screw	2
4	3-2644	Hinge Pin	1
5	12-4470	Shroud (Model 16073)	1
*	12-3080	Shroud (Model 16173)	1
6	18-8970	Decal, Whirlwind	1
7	32104-94	Self-Tapping Screw	4
8	3-7643	Warning Decal	1
9	221-446	Engine (Model 16073)	1
*	221-468	Engine (Model 16173)	1
10	3257-32	Woodruff Key	1
11	5-2490	Shoulder Screw	2
12	12-2080	Handle Pivot Nut	2
13	3290-255	Hair Pin Cotter	2
14	5-2446	Handle Latch	2

Ref. No.	Part No.	Description	No. Used
15	5-6450	Skid Button	2
16	19-5770	Safety Shield (Incl. Ref. #15 & 17) (Model 16073)	1
*	19-5780	Safety Shield (Incl. Ref. #15 & 17) (Model 16173)	1
17	8-6080	Bushing	2
18	10-9680	Wheel (8") w/tire	2
19	3-2652	Wheel Bolt	4
20	6-6220	Knob (Left Rear & Right Front)	2
21	12-2440	Pivot Screw	4
22	18-9590	Spring Arm	4
23	20-3190	Pivot Arm (Rear)	2
24	8-6160	Pivot Screw	2
25	6-6230	Knob (Right Rear & Left Front)	2
26	3-3287	Spacer	2
27	6-4500	Washout Port	1

*Not Illustrated

Copyright 1973 by
The Toro Company
Bloomington, Minnesota 55420 U.S.A.

Price $1.00

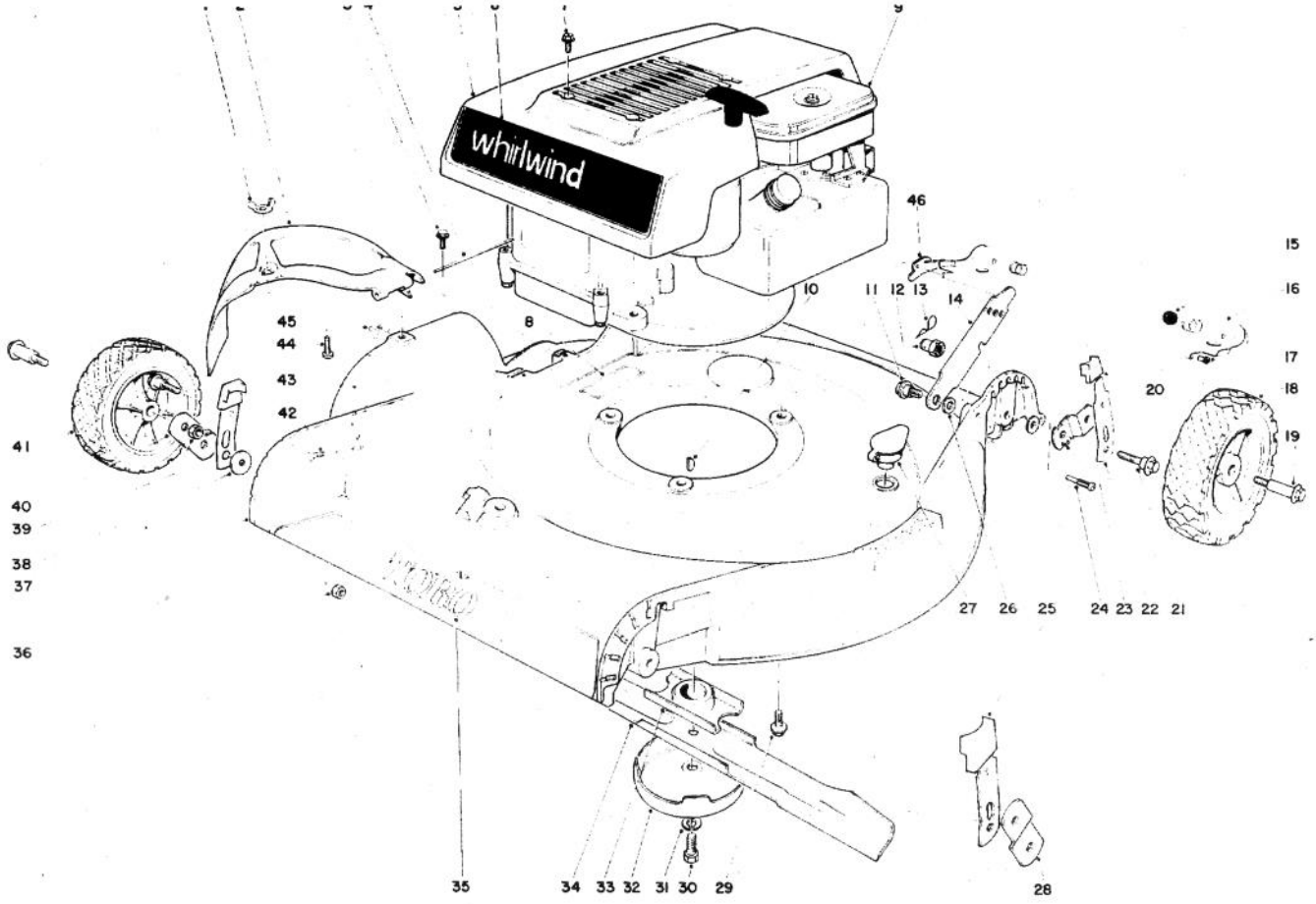

HOUSING AND ENGINE ASSEMBLY

MODELS 16073 AND 16173 (Continued)

Ref. No.	Part No.	Description	No. Used
28	20-3170	Pivot Arm (Left Front)	1
29	11-0590	Screw	3
30	3-5246	Special Screw	1
31	3253-22	Lockwasher	1
32	8-4240	Anti-Scalp Cup	1
33	20-2750	Blade Retainer	1
34	8-5240	Blade (Model 16073)	1
*	8-5230	Blade (Model 16173)	1
35	18-8960	Decal Toro	1
36	32146-5	Locknut	2
37	5-5279	Housing (Model 16073)	1
*	5-5299	Housing (Model 16173)	1
38	5-4460	Pivot Washer (Model 16073)	4
*	5-4460	Pivot Washer (Model 16173)	5

Ref. No.	Part No.	Description	No. Used
39	32146-12	Locknut	4
40	20-3180	Pivot Arm (Right Front)	1
41	10-9670	Wheel (7") w/tire	2
42	32104-17	Screw	2
43	12-2990	Safety Bar	1
44	3290-133	Screw	1
45	3290-199	Speed Nut	1
46	19-5680	Retainer, Safety Shield R.H.	1
*	19-5740	Retainer, Safety Shield L.H.	1
*	18-9940	Loose Parts (Model 16073)	1
*	18-9950	Loose Parts (Model 16173)	1
*	19-5790	Drain Plug Wrench	1

*Not Illustrated

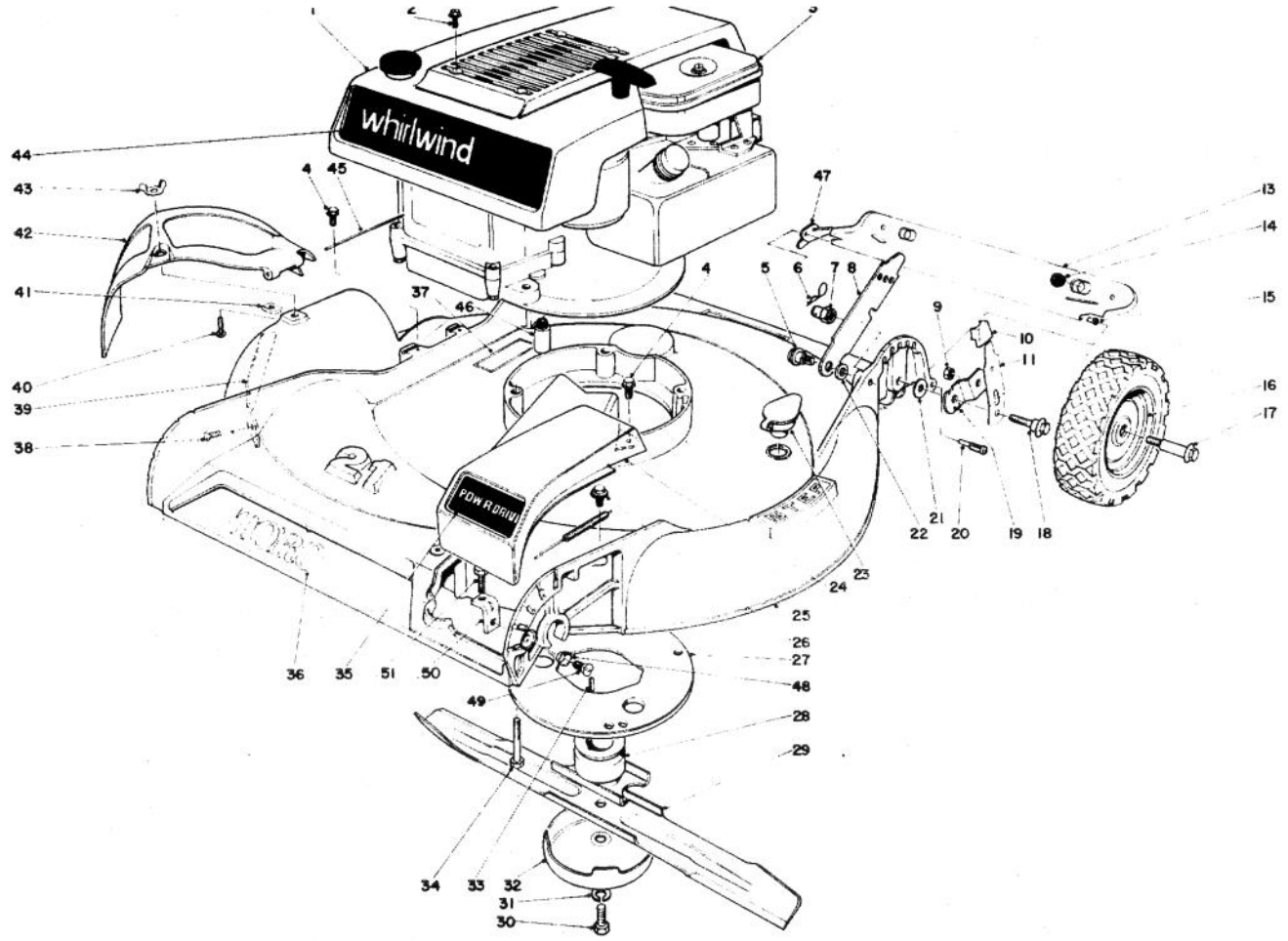

HOUSING AND ENGINE ASSEMBLY — MODEL 16273

Ref. No.	Part No.	Description	No. Used
1	12-2350	Shroud	1
2	32104-94	Self-Tapping Scrwe	4
3	221-467	Engine	1
4	12-5450	Screw, Thread Forming	4
5	5-2490	Shoulder Screw	2
6	3290-255	Hair Pin Cotter	2
7	12-2080	Pivot Nut	2
8	5-2446	Handle Latch	2
9	32146-12	Locknut	2
10	6-6220	Knob Arm (Left Rear)	1
*	6-6230	Knob Arm (Right Rear)	1
11	18-9590	Spring Arm	2
13	19-5780	Rear Safety Shield (Incl. Ref. #14 & 15)	1
14	5-6450	Skid Button	2
15	8-6080	Bushing	2
16	12-2620	Rear Wheel w/Tire (Incl. Ref. #12))	2
17	3-2652	Wheel Bolt	2
18	12-2440	Pivot Screw	2
19	20-3190	Pivot Arm	2
20	8-6160	Screw	2
21	5-4460	Pivot Washer	2
22	3-3287	Spacer	2
23	6-4500	Washout Port	1
24	5-3305	Belt Drive Cover	1
25	5-5289	Housing	1
26	32144-11	Self-Tapping Screw	1

Ref. No.	Part No.	Description	No. Used
27	19-4040	Grass Guard	1
28	21-5040	Blade Retainer	1
29	8-5230	Blade	1
30	3-5246	Special Screw	1
31	3253-22	Lockwasher	1
32	8-4240	Anti Scalp Cup	1
33	21-5060	Square Key	1
34	11-0580	Self-Tapping Screw	3
35	12-2430	Decal, Power-Drive	1
36	18-8960	Decal, Toro	1
37	3-7643	Warning Decal	1
38	32104-17	Self-Tapping Screw	2
39	12-2990	Safety Bar	1
40	3290-133	Screw	1
41	3290-199	Speed Nut	1
42	12-2270	Deflector	1
43	32103-14	Wing Nut	1
44	18-8970	Decal, Whirlwind	1
45	3-2644	Hinge Pin	1
46	19-4030	Extension Oil Drain	1
47	19-5680	Retainer, Safety Shield R.H.	1
*	19-5740	Retainer, Safety Shield L.H.	1
48	3255-12	Conical Washer	1
49	32108-20	Flat Hd. Screw	1
50	3-7278	Bracket Adj.	1
51	321-3	Capscrew	1
*	18-9960	Loose Parts	1
*	19-5790	Drain Plug Wrench	1

*Not Illustrated

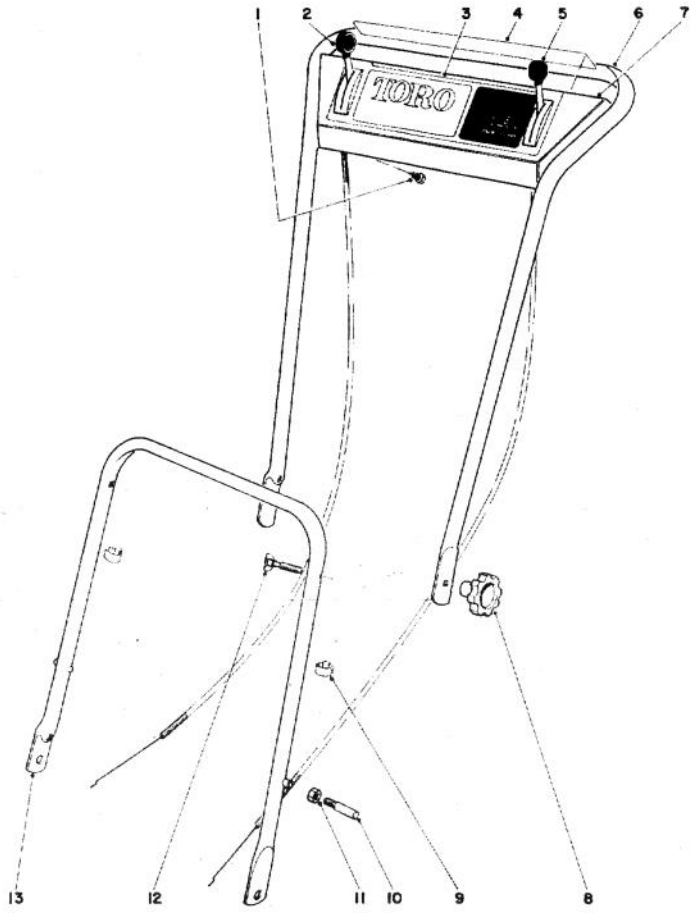

HANDLE ASSEMBLY — MODELS 16073, 16173, 16273

Ref. No.	Part No.	Description	No. Used
1	32104-76	Screw	4
2	21-5110	Throttle Control	1
3	18-8980	Decal, Escutcheon Plate (Model 16273)	1
*	18-8990	Decal, Escutcheon Plate (Models 16073 & 16173)	1
4	18-8950	Decal, Safety	1
5	21-5120	Traction Control (Model 16273 only)	1
6	17-9290	Upper Handle	1
7	17-9310	Escutcheon Plate (Model 16273)	
*	17-9300	Escutcheon Plate (Models 16073 & 16173)	1

Ref. No.	Part No.	Description	No. Used
8	19-4050	Handle Knob (Models 16173 & 16273)	1
*	32146-5	Locknut (Model 16073)	2
9	218-466	Clip (Model 16073 & 16173)	1
*	218-466	Clip (Model 16273)	2
10†	17-9830	Handle Pin	1
11†	32146-8	Locknut	1
12	17-9420	Handle Screw (Models 16173 & 16273)	2
*	17-9410	Handle Screw (Model 16073)	2
13	17-9360	Lower Handle	1
*	19-4220	Grass Bag Kit (Optional)	1
*	19-2590	Grass Bag Kit Giant (Optional)	

*Not Illustrated
†Service Replacement Parts Only

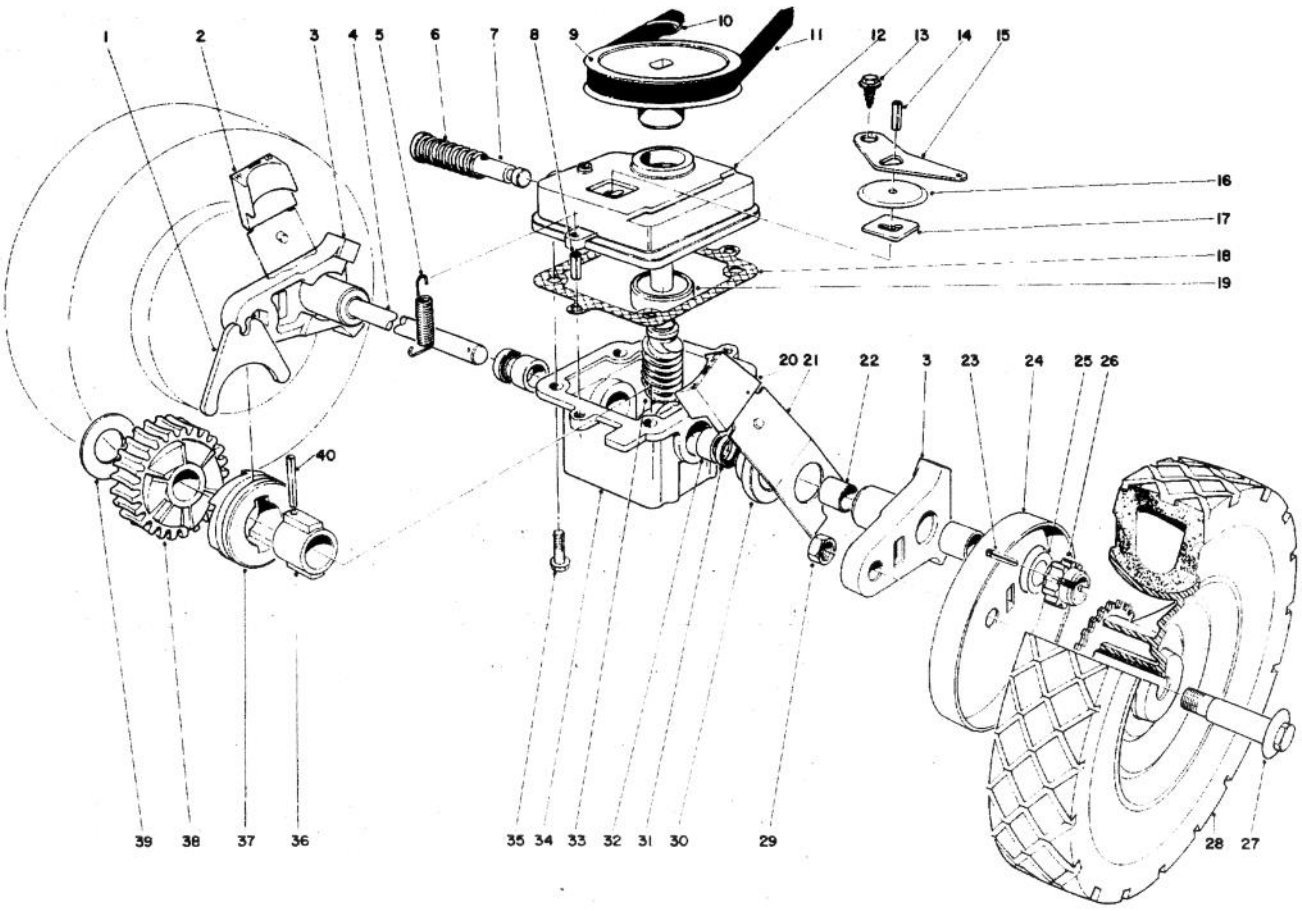

GEAR BOX ASSEMBLY

Ref. No.	Part No.	Description	No. Used
1	5-3247	Shifter Fork	1
2	6-6220	Knob Arm	1
3	18-9710	Pivot Arm (Incl. Ref. No. 22)	2
4	18-9730	Drive Shaft	1
5	17-4490	Spring, Tension	1
6	3-0731	Spring	1
7	5-3248	Shifter Rod	1
8	32121-1	Roll Pin	2
9	18-9760	Pulley	1
10	3290-346	Push-on Retainer	1
11	5-4505	V-Belt	1
12	5-3283	Cover	1
13	32140-64	Self Tapping Screw	1
14	32121-23	Roll Pin	1
15	5-3252	Shifter Arm	1
16	3-2615	Dust Cover	1
17	3-0681	Latch Plate	1
18	3-0734	Gasket	1
19	251-144	Ball Bearing	1
20	6-6230	Knob Arm	1

Ref. No.	Part No.	Description	No. Used
21	3-2640	Spring Arm	2
22	256-1	Bushing	4
23	3284-3	Groove Pin	2
24	18-9820	Wheel Cover	2
25	18-9810	Thrust Washer	2
26	18-9690	Pinion Gear	2
27	3-2652	Wheel Bolt	2
28	12-2610	Wheel and Tire Assembly	2
29	32146-12	Locknut	2
30	5-0745	End Cap	2
31	253-86	Oil Seal	2
32	256-110	Bushing	2
33	18-9700	Worm Shaft	1
34	5-4459	Gear Case (Incl. Ref. 31-32)	1
35	11-9760	Screw	4
36	3-0721	Sleeve	1
37	19-5660	Clutch Jaw	1
38	18-9740	Helical Gear	1
39	3-0724	Thrust Washer	1
40	32121-88	Coil Pin	1
*	18-9780	Complete Gear Case Assembly	1

*Not Illustrated

ENGINE BRIGGS & STRATTON — MODEL 92508-0904-01

FOR 19" HAND PROPELLED MODEL 16073

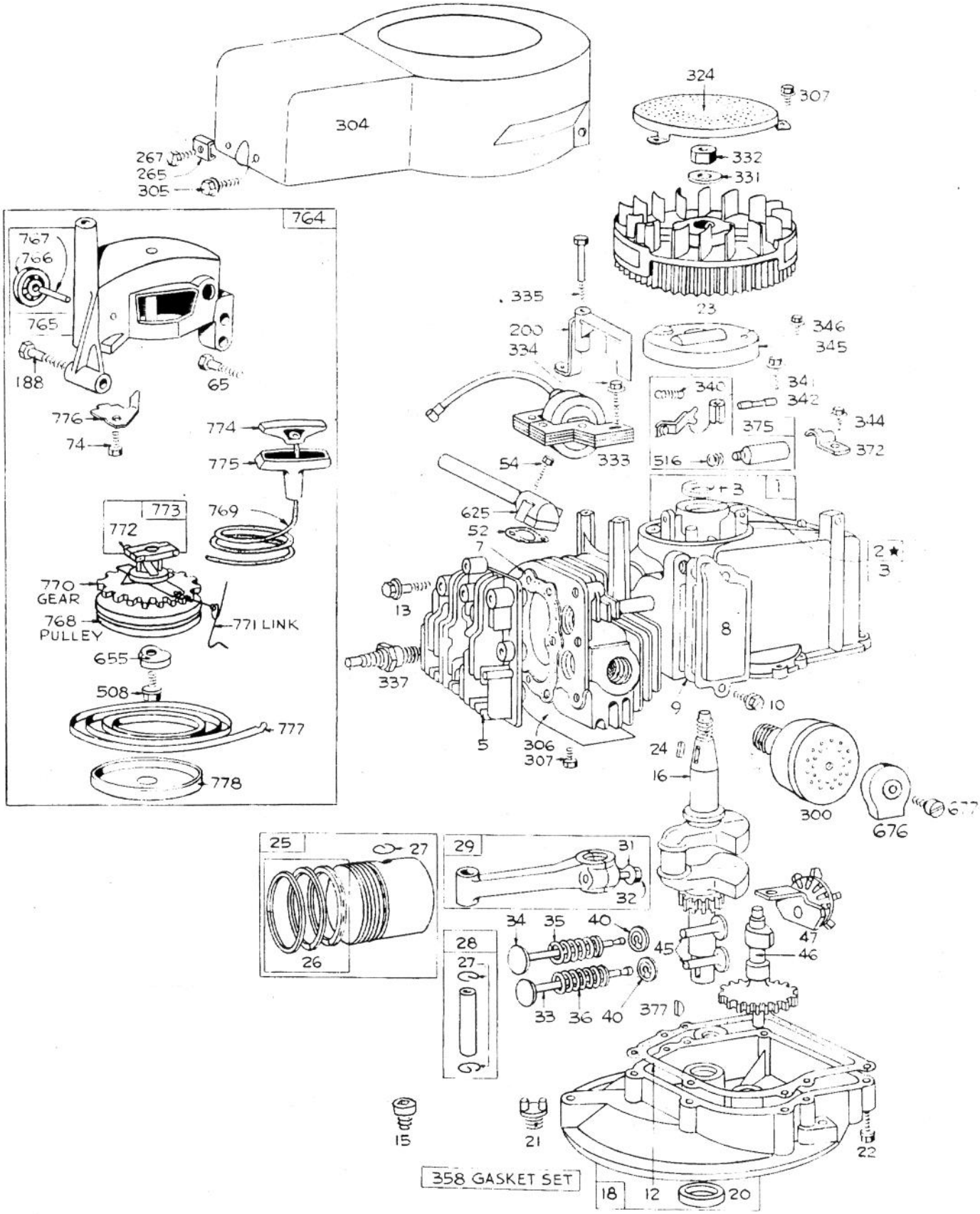

★ NOTE: SPECIAL TOOLS REQUIRED FOR INSTALLING.

Ref. No.	Part No.	Description	No. Used
1	298988	Cylinder Assembly	1
2	293708	Bushing, Cylinder **Note:** Requires special tools for installation.	1
3	89660	Seal, Oil	1
5	211479	Head, Cylinder	1
7	270341	Gasket, Cylinder Head	1
8	298383	Breather, Valve Chamber	1
9	*270239	Gasket, Valve Cover	1
10	93394	Screw, Breather Mtg. Sem	1
12	*27586	Gasket, Crankcase, .015" Thick (Standard)	1
	*27617	Gasket, Crankcase, .005" Thick	1
	*27618	Gasket, Crankcase, .009" Thick	1
13	93111	Screw, Cylinder Head	1
15	93418	Plug, Oil Drain	1
16	261292	Crankshaft	1
18	390068	Sump, Oil	1
20	291841	Seal, Oil	1
21	66768	Plug, Oil Filler	1
22	93032	Screw, Sump Mtg. Sem	1
23	299982	Flywheel, Magneto	1
24	61760	Key, Flywheel	1
25	298904	Piston Assy., Standard	1
	298905	Piston Assy., .010" O.S.	1
	298906	Piston Assy., .020" O.S.	1
	298907	Piston Assy., .030" O.S.	1
		RING SETS: Note: For Chrome Piston Ring Set, Std. Size, Order Part #299742	
26	298982	Ring Set, Std. Piston, Consists of: 211467 Ring, Piston, Comp., Top, Std., 211468 Ring, Piston, Comp., Ctr., Std., 211469 Ring, Piston, Oil, Std.	1
	298983	Ring Set, .010" O.S., Piston, Consists of: 211504 Ring, Piston, Comp., Top, .010" O.S., 211503 Ring, Piston, Comp., Ctr., .010" O.S., 211505 Ring, Piston, Oil, .010" O.S.	1
	298984	Ring Set, .020" O.S., Piston, Consists of: 211507 Ring, Piston, Comp., Top, .020" O.S., 211506 Ring, Piston, Comp., Ctr., .020" O.S., 211508 Ring, Piston, Oil .020" O.S.	1
	298985	Ring Set, .030" O.S. Piston, Consists of: 211511 Ring, Piston, Comp., Top, .030" O.S., 211510 Ring, Piston Comp., Ctr., .030" O.S., 211512 Ring, Piston, Oil, .030" O.S.	1
27	26026	Lock, Piston Pin	1
28	298909	Pin Assy., Piston, Std.	1
	298908	Pin Assy., Piston, .005" O.S.	1
29	294201	Rod Assy., Connecting	1
31	220756	Lock, Conn. Rod Screw	1
32	92296	Screw, Connecting Rod	1

*Included in Gasket Set – Part #298989

Ref. No.	Part No.	Description	No. Used
33	296676	Valve, Exhaust	1
34	296677	Valve, Intake	1
35	260552	Spring, Intake Valve	1
36	26478	Spring, Exhaust Valve	1
40	93312	Retainer, Valve Spring	1
45	230173	Tappet, Valve	1
46	210453	Gear, Cam	1
47	294652	Oil Slinger Gear & Bracket	1
52	270345	Gasket, Intake Elbow	1
54	93485	Screw, Intake Elbow Mtg.	1
65	93587	Screw, Vert. Pull Starter Mtg.	1
74	93490	Screw, Sem	1
188	93585	Screw, Fuel Tank & Start. Mtg.	1
200	68388	Blade, Governor	1
265	22372	Clamp, Casing	1
267	93469	Screw, Clamp Mounting	1
300	391294	Muffler, Exhaust	1
304	299983	Housing, Blower	1
305	93559	Screw, Blow. Hsg. Mtg. Sem	1
306	221805	Shield, Cylinder	1
307	93490	Screw, Cyl. Shield & Rotating Screeen Mtg. Sem	1
324	222063	Screen, Rotating	1
331	220865	Washer, Flywheel	1
332	92284	Nut, Flywheel	1
333	298502	Armature, Magneto	1
334	93381	Screw, Armature Mtg. Sem	1
335	93435	Screw, Armature & Governor Blade Mtg. Sem	1
337	298809	Plug, Spark (w/Gasket)	1
340	26018	Spring, Breaker Arm	1
341	93381	Screw, Break. Arm Mtg. Sem	1
342	65704	Plunger, Breaker Point	1
344	93042	Screw, Cond. Clamp Mtg. Sem	1
345	220366	Cover, Break. Point & Cond.	1
346	93014	Screw, Dust Cover Mtg.	1
358	298989	Gasket Set	1
372	220477	Clamp, Condenser	1
375	294628	Breaker Pts. & Cond. Set **Note:** 229061 Ignition Kit Incl. 294628 Point Set, 65704 Plunger, 61760 Key, Flywheel	1
377	93065	Key, Woodruff No. 505	1
508	93158	Screw, Sem	1
516	260374	Spring, Connector	1
625	298775	Tube, Fuel Intake	1
655	222057	Anchor, Spring	1
676	221794	Deflector, Muffler	1
677	93606	Screw, Muffler Deflector	1
764	299946	Starter Assy., Vertical Pull	1
765	299947	Housing, Vert. Pull Starter	1
766	280022	Pulley, Rope (Small)	1
767	93586	Pin, Small Rope Pulley	1
768	280018	Pulley, Rope Gear	1
769	66734	Rope, Vert. Pull Starter	1
770	280020	Gear, Vert. Pull Starter	1
771	299961	Clip, Vert. Pull Starter	1
772	93598	Screw, Sem	1
773	390112	Retainer Assy., Spur Gear	1
774	280035	Insert, Starter Handle	1
775	280036	Grip, Starter Rope	1
776	222049	Guide, Rope	1
777	390066	Spring, Vert. Pull Starter	1
778	280021	Cover, Vert. Pull Start. Cover	1

ENGINE BRIGGS & STRATTON — MODEL 92908-1457-01

FOR 21" HAND PROPELLED MODEL 16173

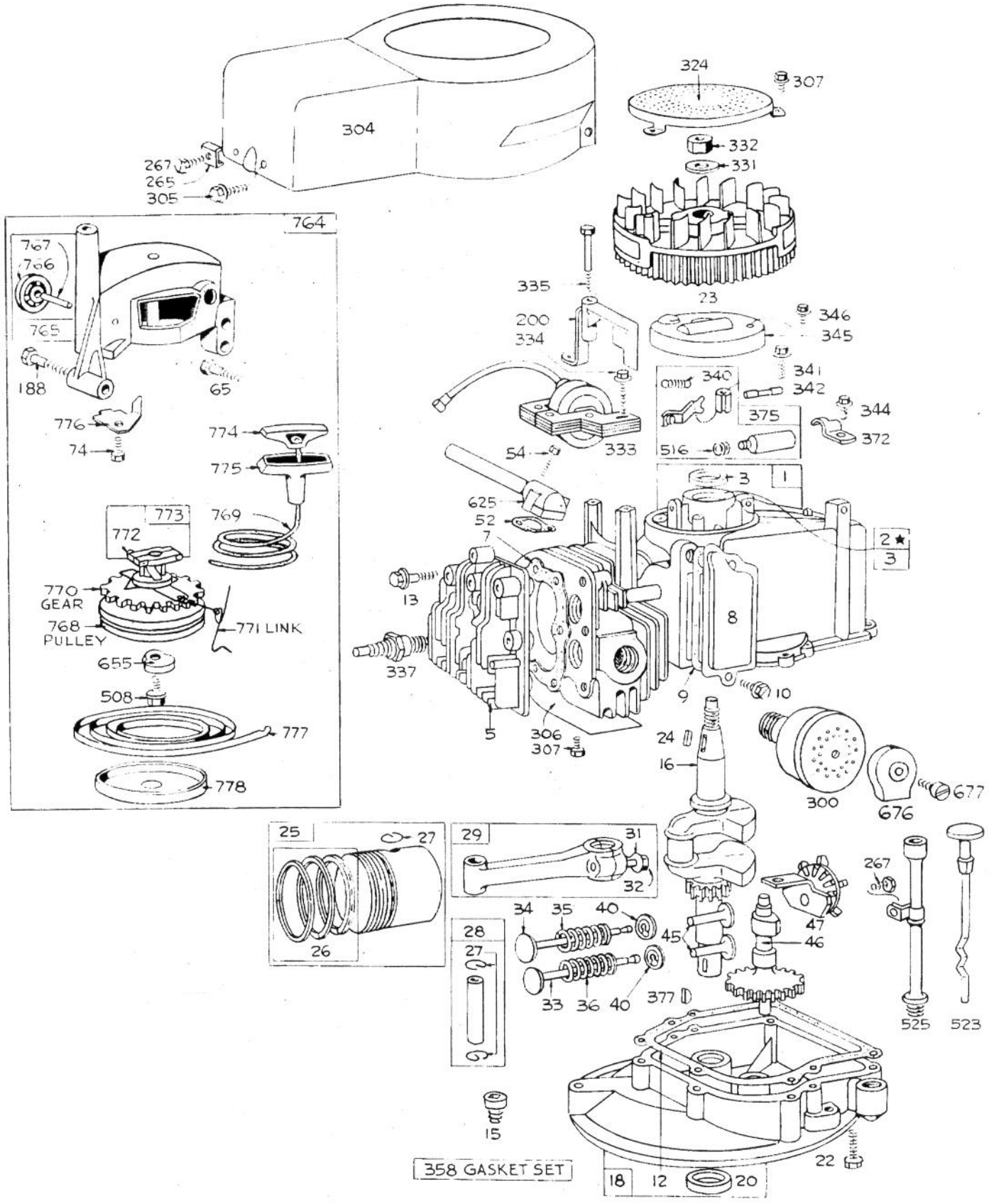

★ NOTE: SPECIAL TOOLS REQUIRED FOR INSTALLING.

Ref. No.	Part No.	Description	No. Used
1	298988	Cylinder Assembly	1
2	293708	Bushing, Cylinder **Note:** Requires special tools for installation	1
3	89660	Seal, Oil	1
5	211479	Head, Cylinder	1
7	270341	Gasket, Cylinder Head	1
8	298383	Breather, Valve Chamber	1
9	*270239	Gasket, Valve Cover	1
10	93394	Screw, Breather & P.T.O. Gear Sump Cover (Ref. No. 86) Mounting Sem	1
12	*27586	Gasket, Crankcase, .015" Thick (Standard)	1
	*27617	Gasket, Crankcase, .005" Thk.	1
	*27618	Gasket, Crankcase, .009" Thk.	1
13	93111	Screw, Cylinder Head	1
15	93418	Plug	1
16	261292	Crankshaft	1
18	390810	Sump, Oil	1
20	291841	Seal, Oil	1
22	93032	Screw, Sump Mtg. Sem	1
23	299982	Flywheel, Magneto	1
24	61760	Key, Flywheel	1
25	298904	Piston Assy., Standard	1
	298905	Piston Assy., .010" O.S.	1
	298906	Piston Assy., .020" O.S.	1
	298907	Piston Assy., .030" O.S.	1
		RING SETS: Note: For Chrome Piston Ring Set, Std. Size, Order Part #299742	
26	298982	Ring Set, Std. Piston, Consists of: 211467 Ring, Piston, Comp., Top, Std., 311468 Ring, Piston, Comp., Ctr., Std. 211469 Ring, Piston, Oil, Std.	1
	298983	Ring Set, .010" O.S. Piston, Consists of: 211504 Ring, Piston, Comp., Top. .010" O.S. 211503 Ring, Piston, Comp., Ctr., .010" O.S., 211505 Ring, Piston, Oil, .010" O.S.	1
	298984	Ring Set, .010" O.S. Piston, Consists of: 211507 Ring, Piston, Top, .010" O.S., 211506 Ring, Piston, Comp., Ctr., .020" O.S., 211508 Ring, Piston, Oil, .020" O.S.	1
	298985	Ring Set, .030" O.S. Piston, Consists of: 211511 Ring, Piston, Comp., Top, .030" O.S., 211510 Ring, Piston, Comp., Ctr., .030" O.S., 211512 Ring, Piston, Oil, .030" O.S.	1
27	26026	Lock, Piston Pin	1
28	298909	Pin Assy., Piston, Std.	1
	298908	Pin Assy., Piston, .005" O.S.	1
29	294201	Rod Assy., Connecting	1
31	220756	Lock, Conn. Rod Screw	1
32	92296	Screw, Connecting Rod	1
33	296676	Valve, Exhaust	1
34	296677	Valve, Intake	1
35	260552	Spring, Intake Valve	1

*Included in Gasket Set – Part #298989

Ref. No.	Part No.	Description	No. Used
36	26478	Spring, Exhaust Valve	1
40	93312	Retainer, Valve Spring	1
45	230173	Tappet, Valve	1
46	210453	Gear, Cam	1
47	294652	Oil Slinger Gear & Bracket	1
52	270345	Gasket, Intake Elbow	1
54	93485	Screw, Intake Elbow Mtg.	1
65	93587	Screw, Vert. Pull Start. Mtg.	1
74	93490	Screw, Sem	1
188	93585	Screw, Fuel Tank & Start. Mtg.	1
200	68388	Blade, Governor	1
265	22372	Clamp, Casing	1
267	93469	Screw, Clamp Mounting	1
300	391294	Muffler, Exhaust	1
304	299983	Housing, Blower	1
305	93559	Screw, Blow. Hsg. Mtg. Sem	1
306	221805	Shield, Cylinder	1
307	93490	Screw, Cyl. Shield & Rotating Screen Mounting Sem	1
324	222063	Screen, Rotating	1
331	220865	Washer, Flywheel	1
332	92284	Nut, Flywheel	1
333	298502	Armature, Magneto	1
334	93381	Screw, Armature Mtg. Sem	1
335	93435	Screw, Armature & Governor Blade Mtg. Sem	1
337	298809	Plug, Spark (w/Gasket)	1
340	26018	Spring, Breaker Arm	1
341	93381	Screw, Break. Arm Mtg. Sem	1
342	65704	Plunger, Breaker Point	1
344	93042	Screw, Cond. Clamp Mtg. Sem	1
345	220366	Cover, Breaker Pt. & Cond.	1
346	93014	Screw, Dust Cover Mtg.	1
358	298989	Gasket Set **Note:** For Engine Repair Kit, Order #390132	1
372	220477	Clamp, Condenser	1
375	294628	Break. Points & Cond. Set **Note:** 299061 Ignition Kit Includes: 294628 Point Set, 65704 Plunger, 61760 Key, Flywheel (For Engine Repair Kit Order #390132)	1
377	93065	Key, Woodruff #505	1
508	93158	Screw, Sem	1
516	260374	Spring, Connector	1
523	299978	Cap w/Dipstick Oil Filler	1
525	299987	Tube, Oil Filler	1
625	298775	Tube, Fuel Intake	1
655	222057	Anchor, Spring	1
676	221794	Deflector, Muffler	1
677	93606	Screw, Muffler Deflector	1
764	299946	Starter Assy., Vertical Pull	1
765	299947	Housing, Vertical Pull Start.	1
766	280022	Pulley, Rope (Small)	1
767	93586	Pin, Small Rope Pulley	1
768	280018	Pulley, Rope Gear	1
769	66734	Rope, Vert. Pull Starter	1
770	280020	Gear, Vert. Pull Starter	1
771	299961	Clip, Vertical Pull Starter	1
772	93598	Screw, Sem	1
773	390112	Retainer Assy., Spur Gear	1
774	280035	Insert, Starter Handle	1
775	280036	Grip, Starter Rope	1
776	222049	Guide, Rope	1
777	390066	Spring, Vert. Pull Starter	1
778	280021	Cover, Vertical Pull Starter Pulley	1

ENGINE BRIGGS & STRATTON — MODEL 92908-1456-01

FOR 21'' SELF-PROPELLED MODEL 16273

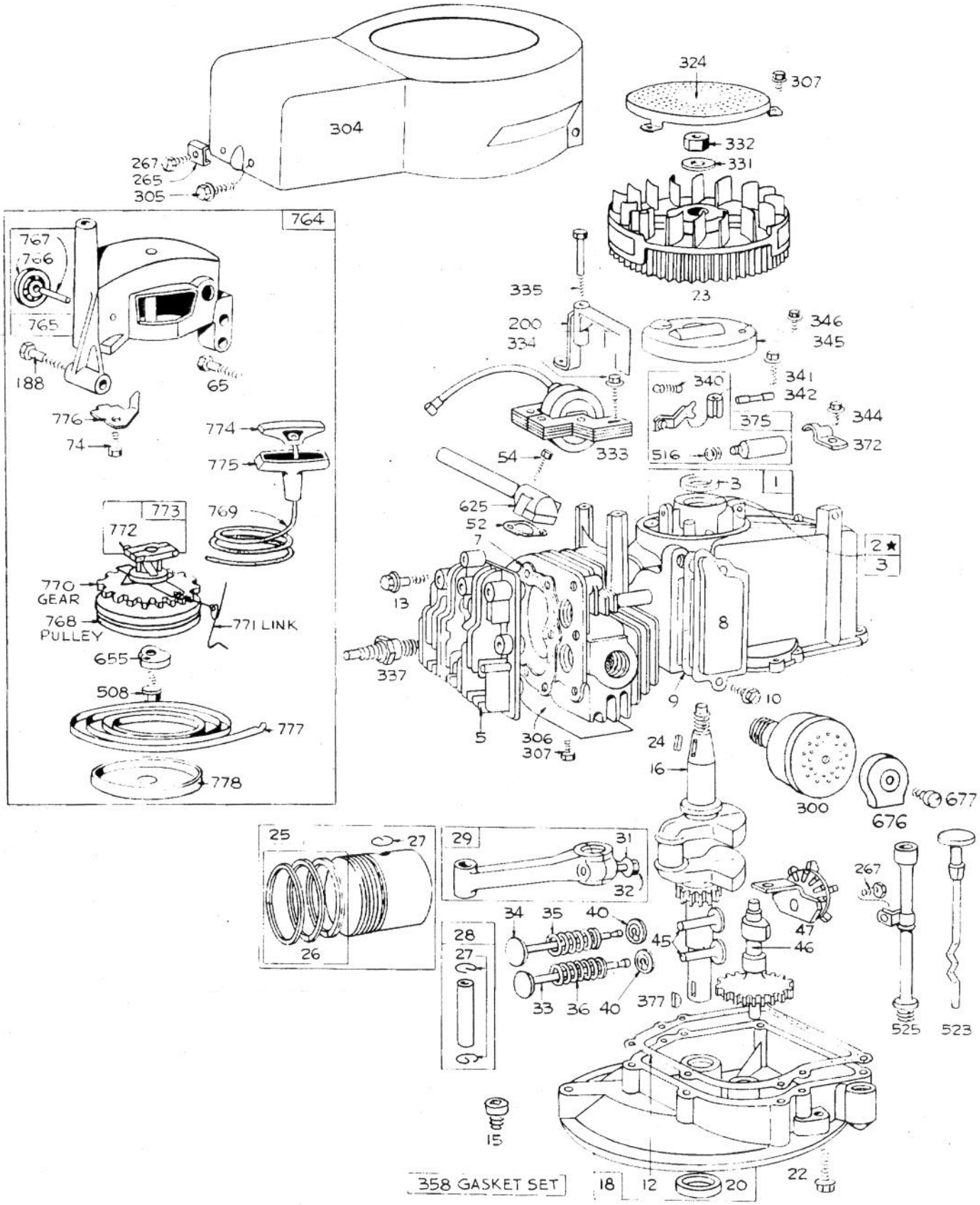

★ NOTE: SPECIAL TOOLS REQUIRED FOR INSTALLING

Ref. No.	Part No.	Description	No. Used
1	298988	Cylinder Assembly	1
2	293708	Bushing, Cylinder **Note:** Requires special tools for installation	1
3	89660	Seal, Oil	1
5	211479	Head, Cylinder	1
7	270341	Gasket, Cylinder Head	1
8	298383	Breather, Valve Chamber	1
9	*270239	Gasket, Valve Cover	1
10	93394	Screw, Breather & P.T.O. Gear Sump Cover (Ref. No. 86) Mounting Sem	1
12	*27586	Gasket, Crankcase, .015" Thick (Standard)	1
	*27617	Gasket, Crankcase, .005" Thk.	1
	*27618	Gasket, Crankcase, .009" Thk.	1
13	93111	Screw, Cylinder Head	1
15	93418	Plug	1
16	261293	Crankshaft	1
18	390810	Sump, Oil	1
20	291841	Seal, Oil	1
22	93032	Screw, Sump Mtg. Sem	1
23	299982	Flywheel, Magneto	1
24	61760	Key, Flywheel	1
25	298904	Piston Assy., Standard	1
	298905	Piston Assy., .010" O.S.	1
	298906	Piston Assy., .020" O.S.	1
	298907	Piston Assy., .030" O.S.	1
		RING SETS: Note: For Chrome Piston Ring Set, Std. Size, Order Part #299742	
26	298982	Ring Set, Std. Piston, Consists of: 211467 Ring, Piston, Comp., Top, Std., 211468 Ring, Piston, Comp., Ctr., Std. 211469 Ring, Piston, Oil, Std.	1
	298983	Ring Set, .010" O.S. Piston, Consists of: 211504 Ring, Piston, Comp., Top. .010" O.S. 211503 Ring, Piston, Comp., Ctr., .010" O.S., 211505 Ring, Piston, Oil, .010" O.S.	1
	298984	Ring Set, .010" O.S. Piston, Consists of: 211507 Ring, Piston, Top, .010" O.S., 211506 Ring, Piston, Comp., Ctr., .020" O.S., 211508 Ring, Piston, Oil, .020" O.S.	1
	298985	Ring Set, .030" O.S. Piston, Consists of: 211511 Ring, Piston, Comp., Top, .030" O.S., 211510 Ring, Piston, Comp., Ctr., .030" O.S., 211512 Ring, Piston, Oil, .030" O.S.	1
27	26026	Lock, Piston Pin	1
28	298909	Pin Assy., Piston, Std.	1
	298908	Pin Assy., Piston, .005" O.S.	1
29	294201	Rod Assy., Connecting	1
31	220756	Lock, Conn. Rod Screw	1
32	92296	Screw, Connecting Rod	1
33	296676	Valve, Exhaust	1
34	296677	Valve, Intake	1
35	260552	Spring, Intake Valve	1

*Included in Gasket Set – Part #298989

Ref. No.	Part No.	Description	No. Used
36	26478	Spring, Exhaust Valve	1
40	93312	Retainer, Valve Spring	1
45	230173	Tappet, Valve	1
46	210453	Gear, Cam	1
47	294652	Oil Slinger Gear & Bracket	1
52	270345	Gasket, Intake Elbow	1
54	93485	Screw, Intake Elbow Mtg.	1
65	93587	Screw, Vert. Pull Start. Mtg.	1
74	93490	Screw, Sem	1
188	93585	Screw, Fuel Tank & Start. Mtg.	1
200	68388	Blade, Governor	1
265	22372	Clamp, Casing	1
267	93469	Screw, Clamp Mounting	1
300	391294	Muffler, Exhaust	1
304	299983	Housing, Blower	1
305	93559	Screw, Blow. Hsg. Mtg. Sem	1
306	221805	Shield, Cylinder	1
307	93490	Screw, Cyl. Shield & Rotating Screen Mounting Sem	1
324	222063	Screen, Rotating	1
331	220865	Washer, Flywheel	1
332	92284	Nut, Flywheel	1
333	298502	Armature, Magneto	1
334	93381	Screw, Armature Mtg. Sem	1
335	93435	Screw, Armature & Governor Blade Mtg. Sem	1
337	298809	Plug, Spark (w/Gasket)	1
340	26018	Spring, Breaker Arm	1
341	93381	Screw, Break. Arm Mtg. Sem	1
342	65704	Plunger, Breaker Point	1
344	93042	Screw, Cond. Clamp Mtg. Sem	1
345	220366	Cover, Breaker Pt. & Cond.	1
346	93014	Screw, Dust Cover Mtg.	1
358	298989	Gasket Set **Note:** For Engine Repair Kit, Order #390132	1
372	220477	Clamp, Condenser	1
375	294628	Break. Points & Cond. Set **Note:** 299061 Ignition Kit Includes: 294628 Point Set, 65704 Plunger, 61760 Key, Flywheel (For Engine Repair Kit Order #390132)	1
377	93065	Key, Woodruff #505	1
508	93158	Screw, Sem	1
516	260374	Spring, Connector	1
523	299978	Cap w/Dipstick Oil Filler	1
525	299987	Tube, Oil Filler	1
625	298775	Tube, Fuel Intake	1
655	222057	Anchor, Spring	1
676	221794	Deflector Screw	1
677	93606	Screw, Muffler Deflector	1
764	299946	Starter Assy., Vertical Pull	1
765	299947	Housing, Vertical Pull Start.	1
766	280022	Pulley, Rope (Small)	1
767	93586	Pin, Small Rope Pulley	1
768	280018	Pulley, Rope Gear	1
769	66734	Rope, Vert. Pull Starter	1
770	280020	Gear, Vert. Pull Starter	1
771	299961	Clip, Vertical Pull Starter	1
772	93598	Screw, Sem	1
773	390112	Retainer Assy., Spur Gear	1
774	280035	Insert, Starter Handle	1
775	280036	Grip, Starter Rope	1
776	222049	Guide, Rope	1
777	390066	Spring, Vert. Pull Starter	1
778	280021	Cover, Vertical Pull Starter Pulley	1

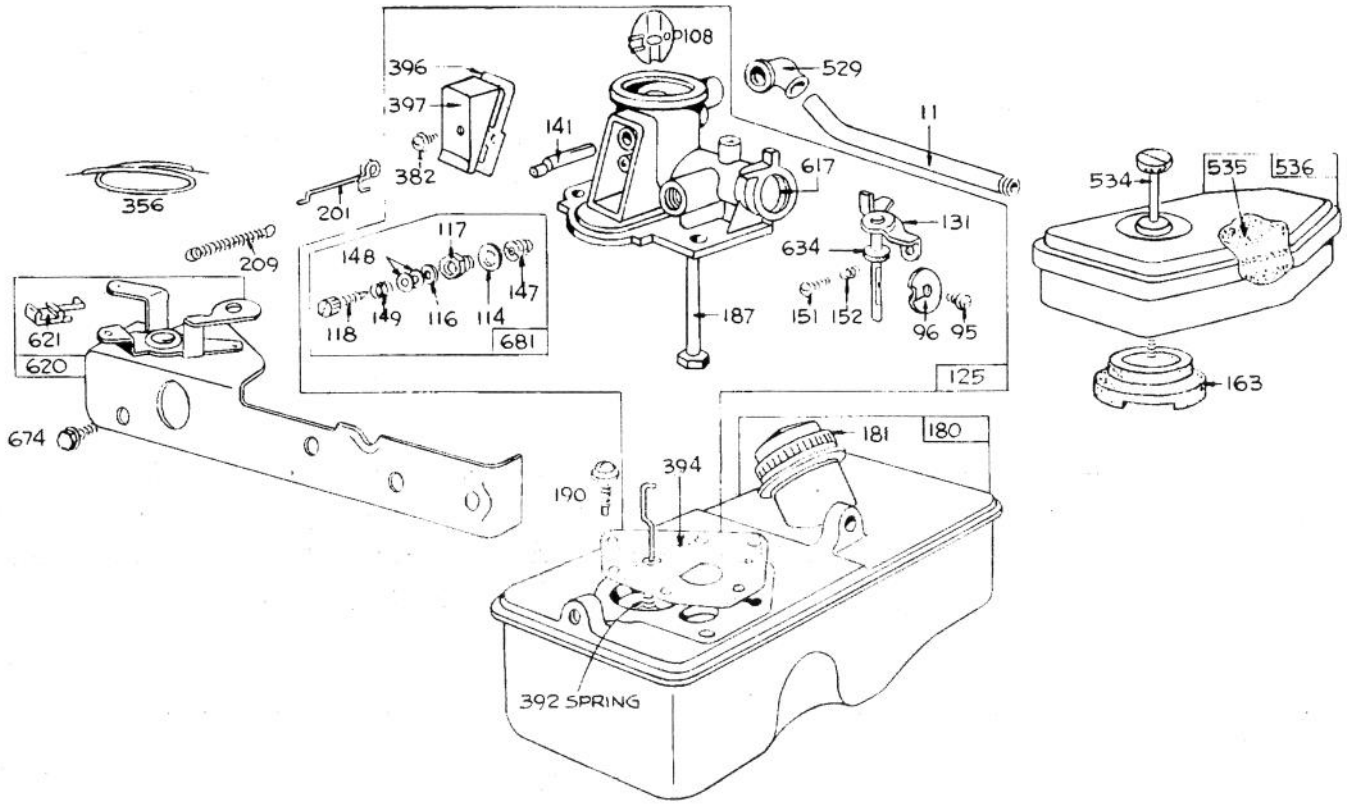

BRIGGS & STRATTON CARBURETOR ASSEMBLY
MODEL 390064
FOR 19" HAND PROPELLED MODEL 16073

Ref. No.	Part No.	Description	No. Used
11	230802	Tube, Breather	1
95	93499	Screw, Throttle Valve Mtg. Sem	1
96	211203	Valve, Throttle	1
108	298819	Valve, Choke	1
114	66594	Gasket, Needle Valve Nut	1
116	65978	Packing, Needle Valve	1
117	230590	Nut, Needle Valve	1
118	23433	Valve, Needle	1
125	390064	Carburetor Assembly	1
131	299977	Shaft & Lever, Throttle	1
141	68908	Shaft, Choke	1
147	230591	Seat, Needle Valve	1
148	22235	Washer, Needle Valve	2
149	26336	Spring, Needle Valve	1
151	93524	Screw, Machine, Rd. Hd.	1
152	260746	Spring, Throttle Adj.	1
163	270621	Gasket, Air Cleaner Mtg.	1
180	299973	Tank Assembly, Fuel	1
181	298425	Cap, Fuel Tank	1

Ref. No.	Part No.	Description	No. Used
187	296476	Pipe, Fuel	1
190	93440	Screw, Fuel Tank Mtg. Sem	1
201	261027	Link, Governor	1
209	260877	Spring, Governor	1
356	298479	Wire, Ground	1
382	93545	Screw, Choke Link Cover	1
392	261016	Spring, Diaphragm	1
394	299637	Diaphragm, Carburetor	1
396	270571	Gasket, Choke Link Cover	1
397	211678	Cover, Choke Link	1
529	67838	Grommet, Breather	1
534	93374	Screw, Air Cleaner	1
535	270579	Element, Air Cleaner	1
536	390055	Cleaner Assembly, Air	1
617	270344	Seal, Intake Tube	1
620	299974	Plate, Carburetor Control	1
621	297472	Switch, Stop	1
634	270167	Washer, Throttle Shaft	1
674	93447	Screw, Tank To Bracket	1
681	299060	Needle Valve Kit	1

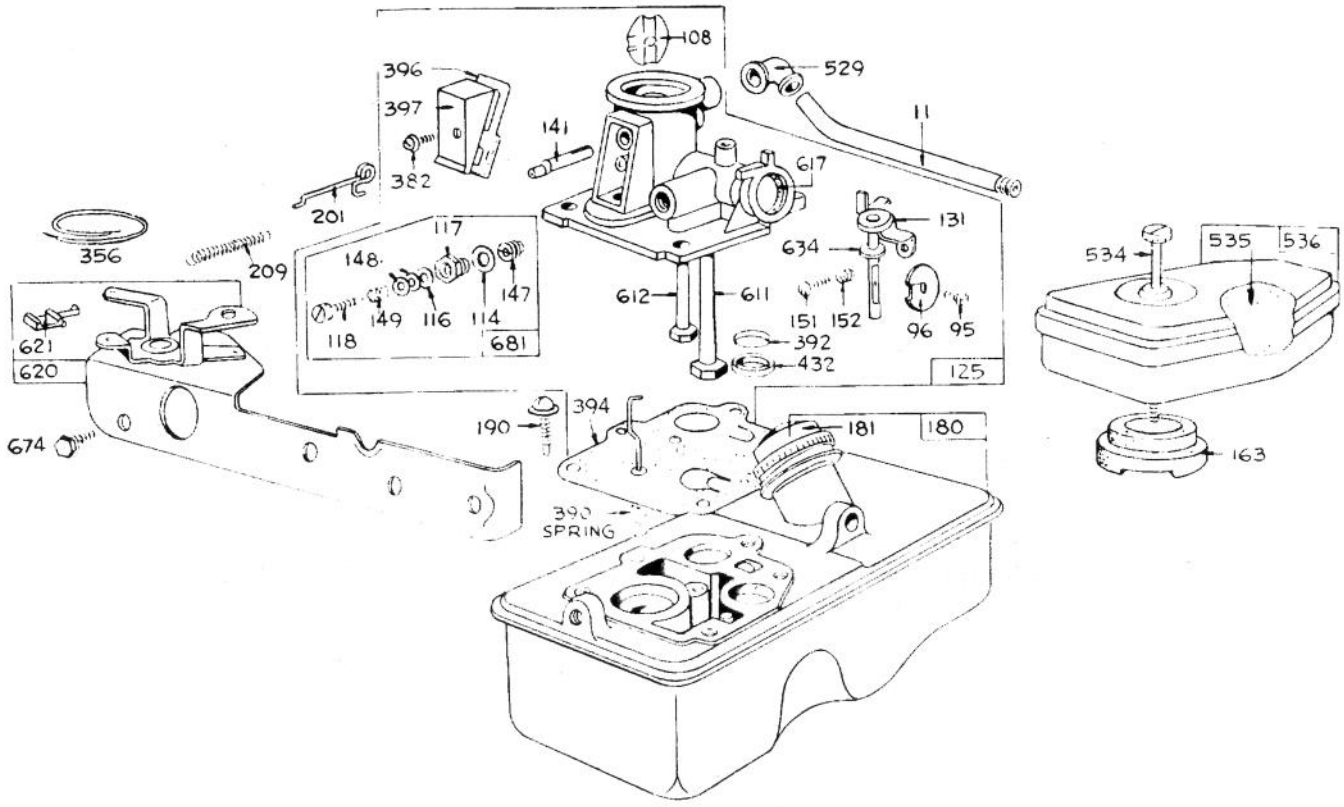

CARBURETOR ASSEMBLY MODEL 390065

FOR 21" HAND PROPELLED MODEL 16173

FOR 21" SELF PROPELLED MODEL 16273

Ref. No.	Part No.	Description	No. Used
11	230802	Tube, Breather	1
95	93499	Screw, Throttle Valve Mounting Sem	1
96	211237	Valve, Throttle	1
108	280024	Valve, Choke	1
114	66594	Gasket, Needle Valve Nut	1
116	65978	Packing, Needle Valve	1
117	230590	Nut, Needle Valve	1
118	23433	Valve, Needle	1
125	390065	Carburetor Assembly	1
131	299977	Shaft & Lever, Throttle	1
141	68908	Shaft, Choke	1
147	230591	Seat, Needle Valve	1
148	22235	Washer, Needle Valve	2
149	26336	Spring, Needle Valve	1
151	93524	Screw, Round Head	1
152	260746	Spring, Throttle Adj.	1
163	*270621	Gasket, Air Cleaner Mtg.	1
180	299972	Tank Assembly, Fuel	1
181	298425	Cap, Fuel Tank	1
190	93440	Screw, Fuel Tank Mtg.	1
201	261027	Link, Governor	1

Ref. No.	Part No.	Description	No. Used
209	260877	Spring, Governor	1
356	298479	Wire, Ground	1
382	93545	Screw, Choke Link Cover	1
390	261015	Spring, Diaphragm	1
392	260455	Spring, Fuel Pump Diaphragm	1
394	299636	Diaphragm, Carburetor	1
396	270571	Gasket, Choke Link Cover	1
397	211678	Cover, Choke Link	1
432	221377	Cap, Spring	1
529	67838	Grommet, Breather	1
534	93374	Screw, Air Cleaner	1
535	270579	Element, Air Cleaner	1
536	390055	Cleaner Assembly, Air	1
611	297219	Pipe, Fuel (Long)	1
612	296811	Pipe, Fuel (Short)	1
617	270344	Seal, Fuel Intake Tube	1
620	299974	Plate, Carburetor Control	1
621	297472	Switch, Stop	1
634	270167	Washer, Throttle Shaft	1
674	93447	Screw, Tank to Bracket	1
681	299060	Needle Valve Kit	1

*Included in Gasket Set – Part #298989