Form No. 3442-366 Rev A

Light Mount Kit

Greensmaster® 1000 Series Mower

Model No. 04138

Installation Instructions

Installation

1 Preparing the Machine

No Parts Required

Procedure

1. Park the machine on a level surface.
2. Engage the parking brake.
3. Shut off the engine.
4. Remove the spark-plug wire from the spark plug; refer to your machine *Operator's Manual*.
5. If the Light Kit (Model 04135) has been installed on your machine, perform the following steps:
   A. Remove the wire-harness connections (Figure 1) from the lights.

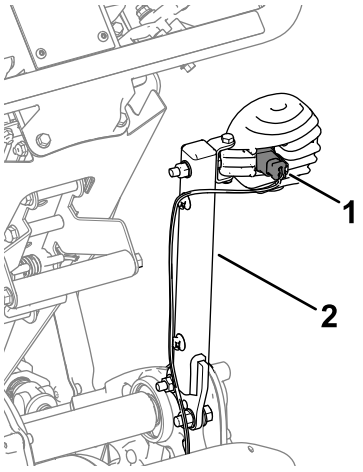

Figure 1
Right side shown

1. Wire-harness connection 2. Light mount

   B. Remove the light mounts (Figure 1) from the machine. Set aside the mounts for assembly to the mount brackets.

2 Installing the Kit

Parts needed for this procedure:

1	Right light bracket (fixed-head machine)
1	Left light bracket (fixed-head machine)
1	Right light bracket (flex machine)
1	Left light bracket (flex machine)
4	Bolt
4	Flange nut (5/16 inch)
2	Flange nut (3/8 inch)
2	Locknut
6	Socket-head screw (5/16 inch)
2	Socket-head screw (3/8 inch)
4	Wire-harness mount
1	Cable tie

© 2020—The Toro® Company
8111 Lyndale Avenue South
Bloomington, MN 55420

Register at www.Toro.com.

CE

Original Instructions (EN)
Printed in the USA
All Rights Reserved

3442-366

Installing the Kit for Fixed-Head Machines

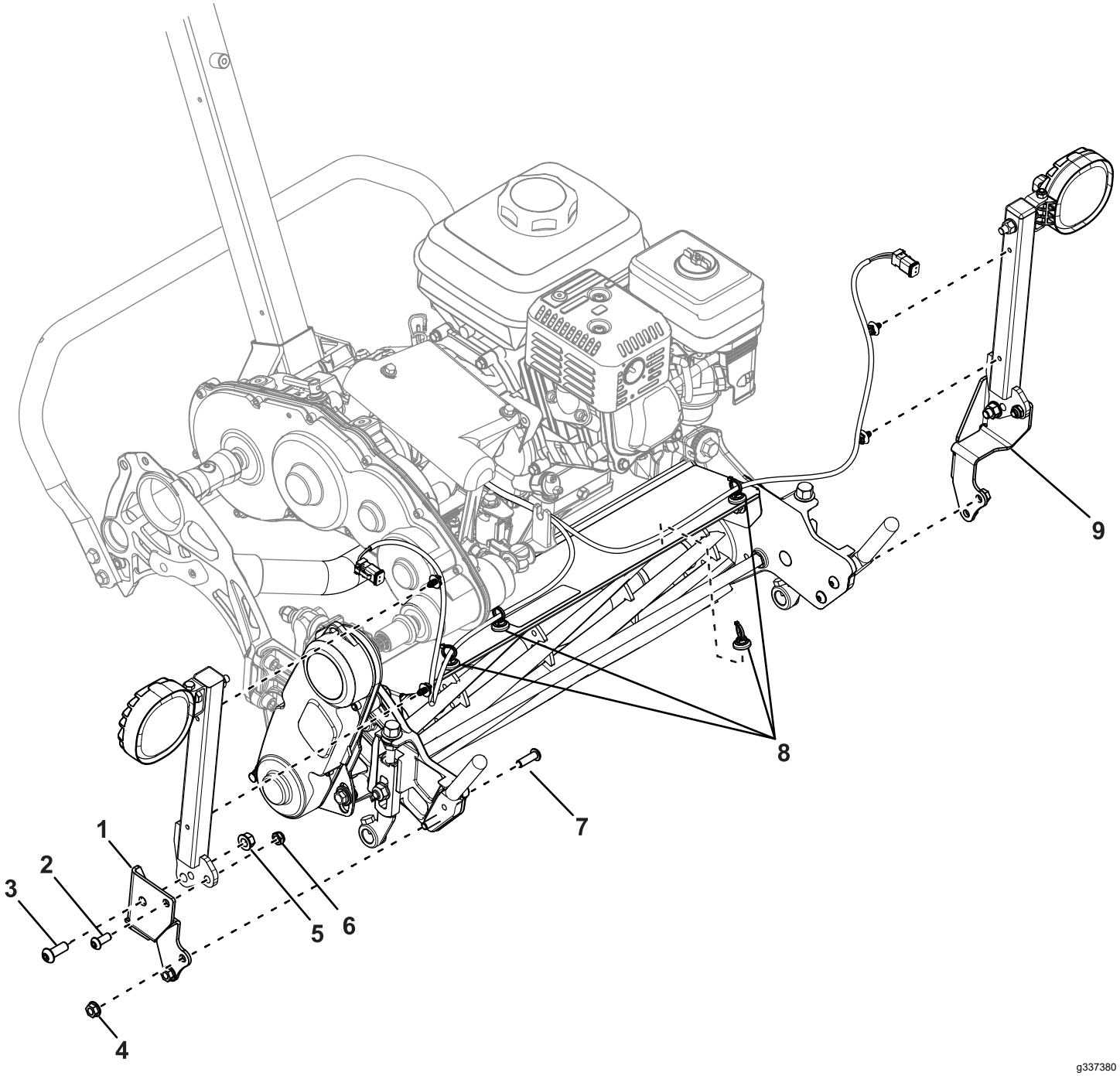

Figure 2

1. Right mount bracket
2. Socket-head screw (5/16 inch)
3. Socket-head screw (3/8 inch)
4. Flange nut (5/16 inch)
5. Flange nut (3/8 inch)
6. Locknut
7. Bolt
8. Wire-harness mounts
9. Left mount bracket

1. Use 2 socket-head screws (5/16 inch), 2 locknuts, 2 socket-head screws (3/8 inch), and 2 flange nuts (3/8 inch) to secure the light mounts to the mount brackets (Figure 2).
2. Remove the existing bolts that secure the basket mounts to the cutting unit (Figure 3).

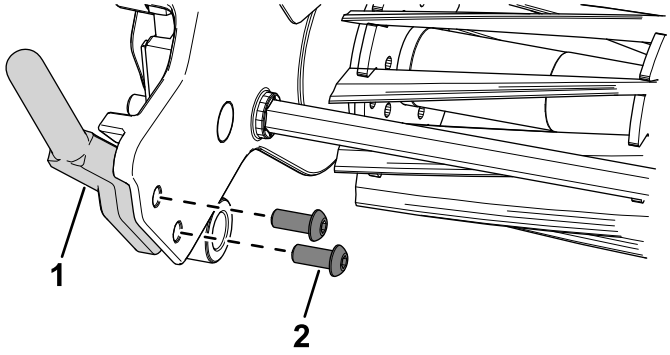

g337544

Figure 3

1. Basket mount
2. Bolt

3. Use 4 bolts and 4 flange nuts (5/16 inch) to secure the mount brackets to the cutting-unit basket mounts (Figure 2).
4. Install the wire-harness mounts to the areas shown in Figure 2.
5. Secure the wire harness to the wire-harness mounts.
6. Plug in the wire-harness connections to the lights.

Installing the Kit for Flex Machines

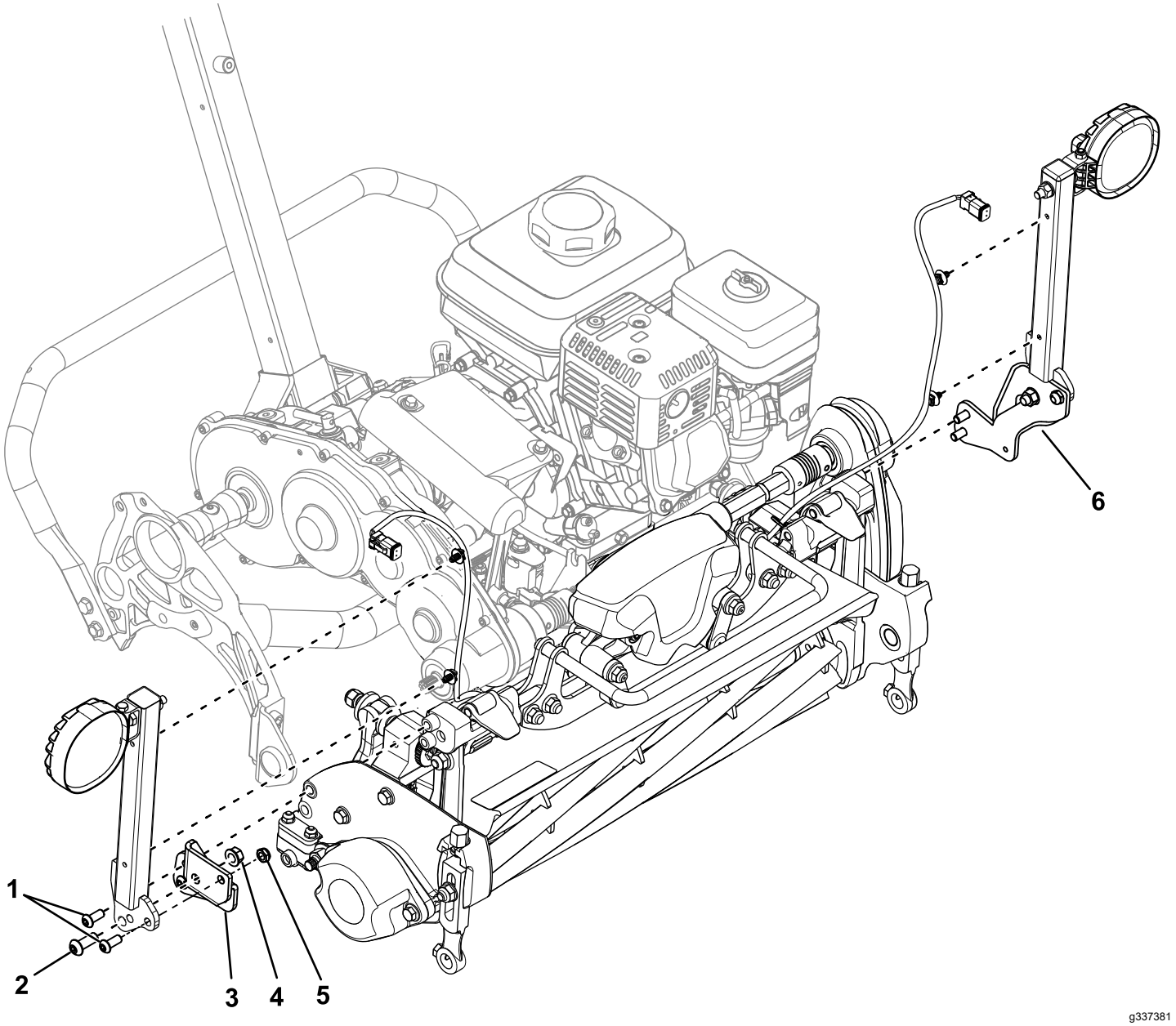

Figure 4

1. Socket-head screws (5/16 inch)
2. Socket-head screw (3/8 inch)
3. Right mount bracket
4. Flange nut (3/8 inch)
5. Locknut
6. Left mount bracket

If you install this kit to a Model 04860 or 04861 traction unit, ensure that the part number for light-kit wire harness is 122-2178.

If you have an older wire harness (Part Number 122-1418), replace it with the new wire harness (Part Number 122-2178); refer to your authorized Toro distributor for the new wire harness.

1. Use 2 socket-head screws (5/16 inch), 2 locknuts, 2 socket-head screws (3/8 inch), and 2 flange nuts (3/8 inch) to secure the light mounts to the mount brackets (Figure 4).
2. Use 4 socket-head screws (5/16 inch) to secure the mount brackets to the cutting-unit hub ends (Figure 4).
3. Install the wire-harness mounts to the frame areas shown in Figure 5.

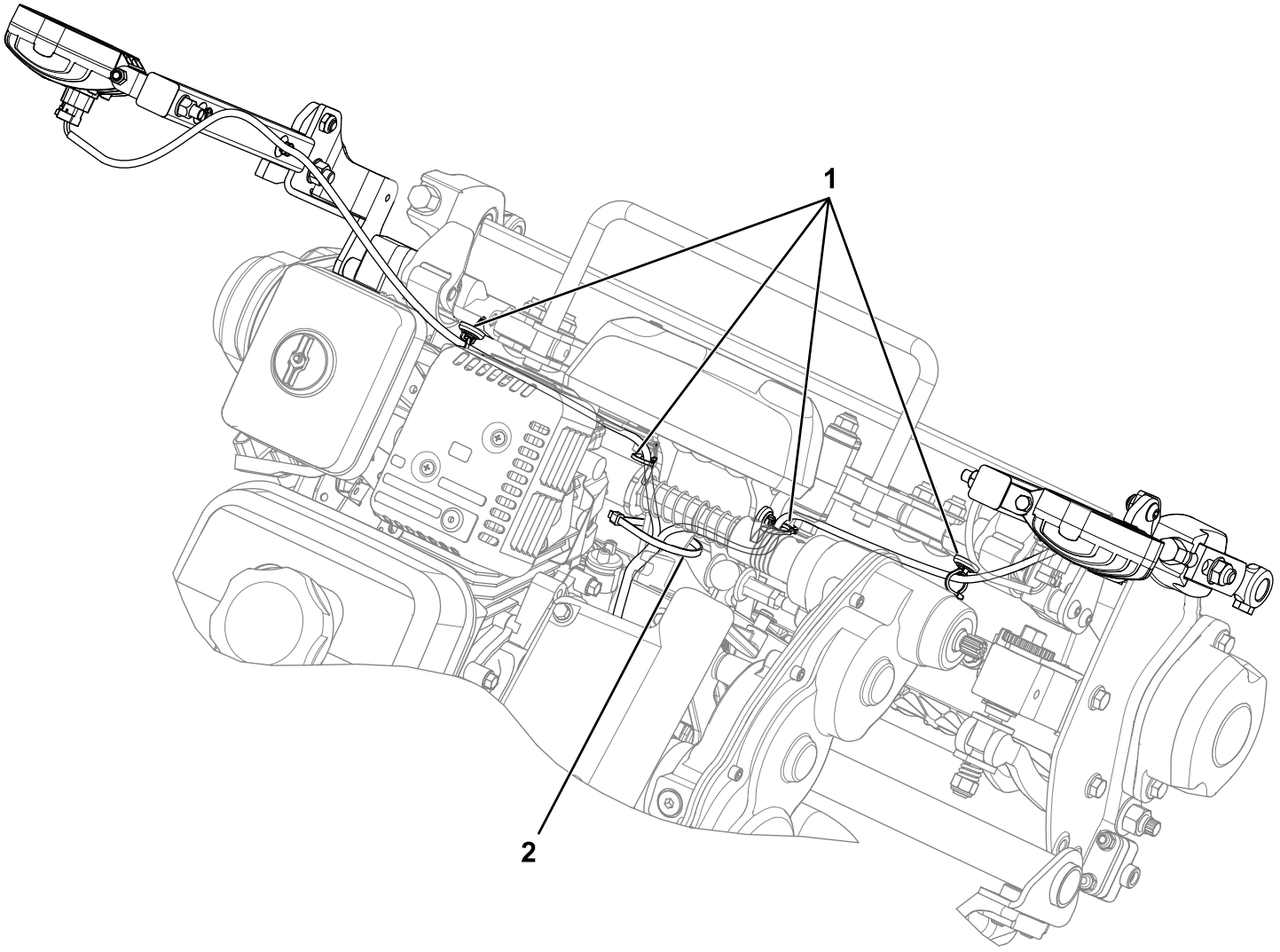

Figure 5

1. Wire-harness mounts
2. Cable tie

4. Secure the wire harness to the wire-harness mounts (Figure 5).
5. Plug in the wire-harness connections to the lights.
6. Use a cable tie to secure the wire harness to the frame (Figure 5).

   Note: This ensures that the wire harness does not rub against the reel driveshaft.

Notes:

Notes:



Count on it.