Form No. 3325–274

Super BlowerVac

Model No. 51521 – 200000001 and Up

Parts Catalog

Ordering Replacement Parts

To order replacement parts, please supply: the part number, the quantity, and the description of each part desired.

Understanding Reference Numbers

Each identified part in an illustration has a reference number. The reference number for a part also appears in the parts list, along with other information about the part.

This catalog uses two special reference number formats, one to indicate parts in a service assembly and another to indicate the quantity of a given part in an illustration.

Service Assembly Reference Numbers

Parts in service assemblies have reference numbers in the form **a:b.** The **a** represents the reference number of the entire service assembly and the **b** represents a sequential number unique to each part within the service assembly.

For example, a wheel assembly might be identified by reference number **6**, the tire by **6:1**, the valve by **6:2**, and the wheel by **6:3**. When you order the assembly identified by reference number 6, you receive all parts identified by reference numbers 6:1, 6:2, and 6:3. However, you may also order any part individually.

Reference numbers of this type appear in illustrations and in part lists.

Reference Numbers Indicating Quantity

In an illustration, if a reference number indicates more than one part, the reference number has the form **nX y.** The **n** represents the quantity of the part, the **X** is the multiplication symbol, and the **y** represents the reference number.

For example, in an illustration, the reference number **2X 37** means that two of the parts identified by reference number 37 are indicated.

© The TORO Company — 2000
All Rights Reserved

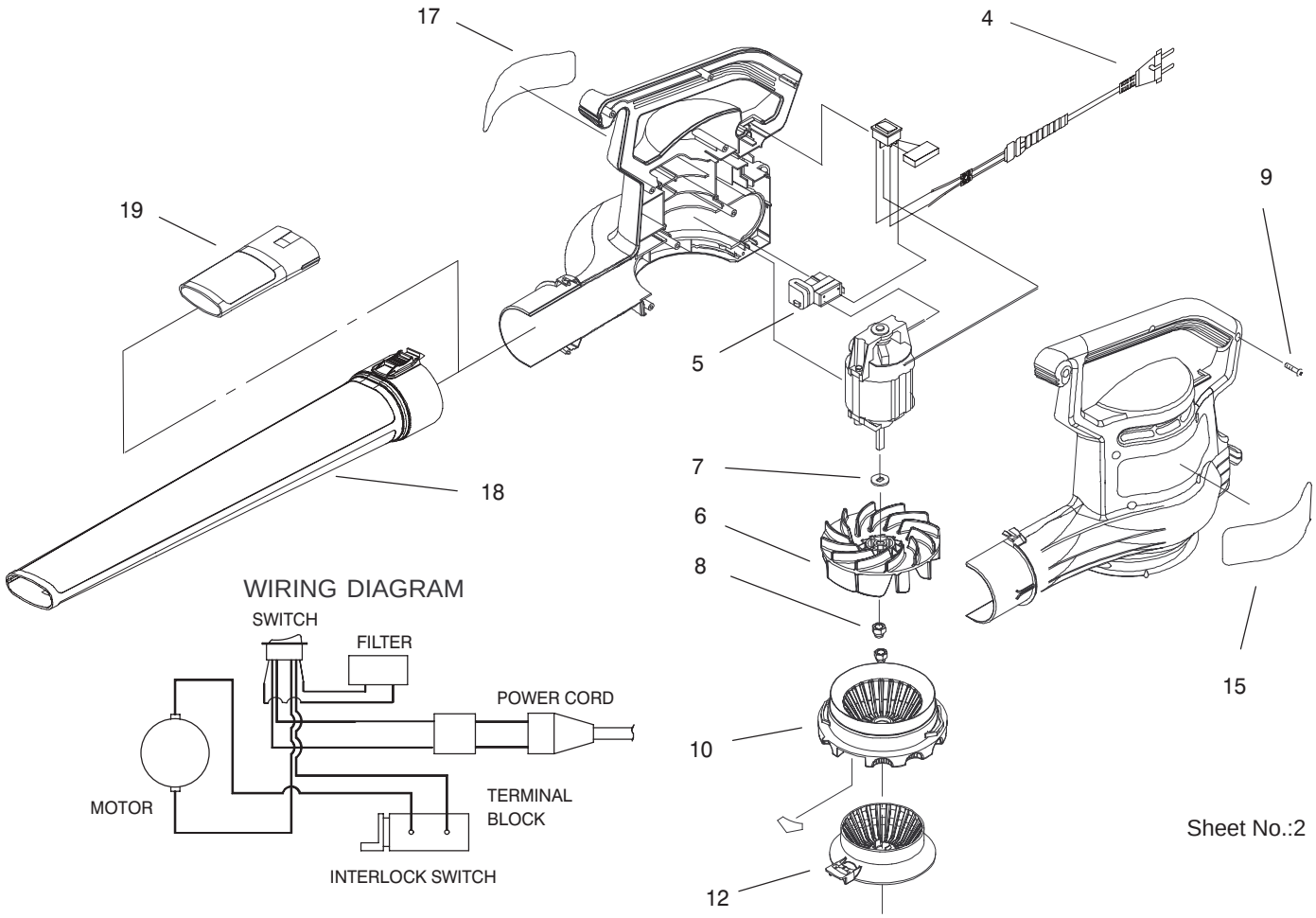

BlowerVac Assembly

Ref. No.	Part No.	Qty.	Description
4	98–3179	1	Harness – Blower, 230 Volt (Australia)
5	95–3286	1	Switch – Interlock
6	98–3150	1	Impeller – Blower
7	93–0585	1	Washer
8	93–9993	1	Nut – Impeller
9	94–4496	9	Screw–PPH
10	100–9050	1	ASM–Inlet Cover & Decal
12	98–3155	1	Choke – Air
15	93–0579	1	Decal, Logo, Superblower
17	100–2475	1	Label Stock–Serial, Australia
18	98–3151	1	Tube–Blower
19	98–3152	1	Insert – Tube

Ref. No.	Part No.	Qty.	Description

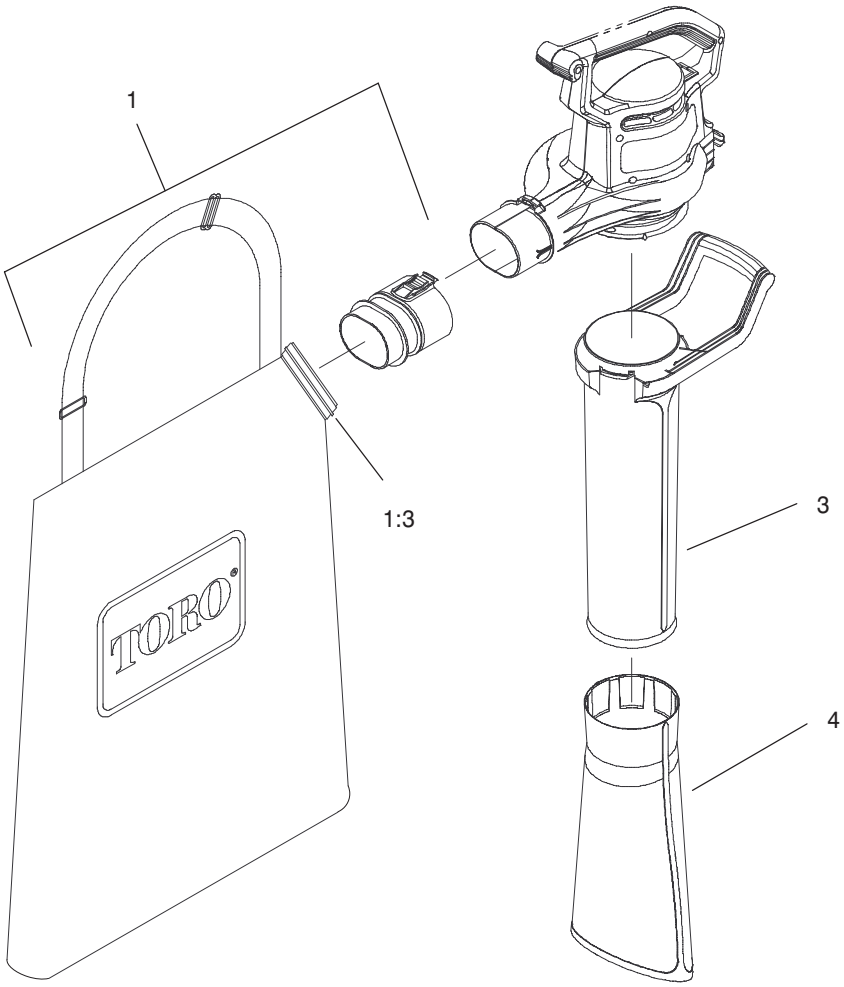

Sheet No.:3

Vacuum Tube and Bag Assembly

Ref. No.	Part No.	Qty.	Description
1	100–2474	1	Bag ASM
1:3	100–9064	1	Tie–Cable
3	93–0572	1	Tube – Vac, Upper
4	93–0573	1	Tube – Vac, Lower

Ref. No.	Part No.	Qty.	Description


TORO®