Form No. 3322-811 Rev B

TORO®

622

Snowthrower

Model No. 38063—200000001 and Up

Operator's Manual

CE

International English (GB)

Contents

	Page
Introduction	2
Safety	3
General Snowthrower Safety	3
Toro Snowthrower Safety	4
Sound Pressure Level	5
Sound Power Level	5
Vibration Level	5
Symbol Glossary	6
Assembly	9
Loose Parts	9
Installing the Handle	9
Installing the Speed Selector Rod	10
Installing the Traction Rod	11
Installing the Auger/Impeller Drive Control Linkage	11
Installing the Chute Control Rod	12
Securing the Chute Deflector	13
Checking the Tire Pressure	13
Before Starting	13
Filling the Engine with Oil	13
Filling the Fuel Tank With Gasoline	14
Operation	15
Controls	15
Removing the Heater Box	15
Installing the Heater Box	16
Starting the Engine	16
Stopping the Engine	16
Freewheeling or Self-propel Drive	17
Snowthrowing Tips	17
Maintenance	18
Recommended Maintenance Schedule	18
Checking the Engine Oil Level	19
Changing the Engine Oil	19
Checking the Auger Gear Box Grease	20
Adjusting the Traction Drive	20
Replacing the Traction Drive Belt	20
Adjusting the Auger/Impeller Drive Belt	22
Replacing the Auger/Impeller Drive Belt	22
Adjusting the Skids and the Scraper	22
Adjusting the Speed Selector	23
Lubricating the Snowthrower	24
Replacing the Spark Plug	24
Emptying the Fuel Tank	24
Troubleshooting	25
Storage	27
Preparing the Fuel System	27
Preparing the Engine	27
Preparing the Snowthrower	28
Accessories	28

Introduction

Thank you for choosing a Toro product. We want you to be completely satisfied with your new purchase.

Read this manual carefully to learn how to operate and maintain your product properly. The information in this manual can help you and others avoid injury and product damage. Although Toro designs and produces safe products, you are responsible for operating the product properly and safely.

Whenever you contact your Authorized Service Dealer or the factory for help with service, genuine Toro parts, or additional information, have the model number and the serial number of your product handy. You will find the model number and serial number decal on the product as illustrated in Figure 1.

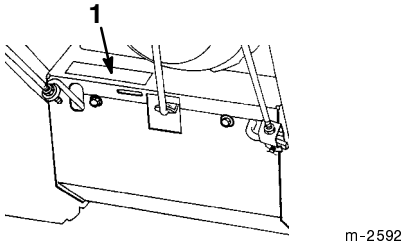

Figure 1

1. Model number and serial number decal

Write the product model number and serial number in the space below:

Model No. _____

Serial No. _____

This manual identifies potential hazards and has special safety messages that help you and others avoid personal injury and even death. DANGER, WARNING, and CAUTION are words used to identify the level of hazard.

DANGER signals an extreme hazard that will cause serious injury or death if you do not follow the recommended precautions.

WARNING signals a hazard that may cause serious injury or death if you do not follow the recommended precautions.

©2000 **The Toro Company**
8111 Lyndale Ave. South
Bloomington, MN 55420-1196

All Rights Reserved
Printed in the USA

CAUTION signals a hazard that may cause minor or moderate injury if you do not follow the recommended precautions.

This manual uses two other words to highlight information. **Important** calls attention to special mechanical information and **Note** emphasizes general information worthy of special attention.

Safety

This snowthrower meets or exceeds the B71.3 specifications of the American National Standards Institute and the ISO standard 8437 in effect at the time of production. However, improper use or maintenance by the operator or owner can result in injury. To reduce the potential for injury, comply with these safety instructions.

The snowthrower is designed and tested to offer reasonably safe service; however, **failure to comply with the following instructions may result in personal injury.**

To ensure maximum safety, best performance, and to gain knowledge of the product, it is essential that you and any other operator of the snowthrower read and understand the contents of this manual before the motor is ever started. Pay particular attention to the safety alert symbol ⚠ which means CAUTION, WARNING, OR DANGER — "personal safety instruction." Read and understand the instruction because it has to do with safety. Failure to comply with instruction may result in personal injury.

General Snowthrower Safety

The following instructions have been adapted from the ANSI/OPEI standard B71.3 and ISO standard 8437 in effect at the time of production. Information or terminology specific to Toro snowthrowers is enclosed in parenthesis.

Training

- Read the operator's manual carefully. Be thoroughly familiar with the controls and the proper use of the equipment. Know how to stop the unit and disengage the controls quickly.
- Never allow children to operate the equipment. Never allow adults to operate the equipment without proper instruction.
- Keep the area of operation clear of all persons, particularly small children and pets.
- Exercise caution to avoid slipping or falling, especially when operating in reverse.

Preparation

- Thoroughly inspect the area where the equipment is to be used and remove all doormats, sleds, boards, wires, and other foreign objects.
- Disengage all clutches and shift into neutral before starting the engine.
- Do not operate the equipment without wearing adequate winter garments. Wear footwear that will improve footing on slippery surfaces.
- Handle fuel with care; it is highly flammable.
  - Use an approved fuel container.
  - Never add fuel to a running or hot engine.
  - Fill fuel tank outdoors with extreme care. Never fill fuel tank indoors.
  - Replace gasoline caps securely and wipe up spilled fuel.
- Use only the power cord supplied with the snowthrower and a receptacle appropriate for use with the cord for electric starting motors.
- Adjust the auger housing height to clear gravel or crushed rock surface. (This is not necessary on single-stage snowthrowers.)
- Never attempt to make any adjustments while the engine is running, except where specifically recommended by Toro.
- Let engine and machine adjust to outdoor temperatures before starting to clear snow.
- The operation of any powered machine can result in foreign objects being thrown into the eyes. Always wear safety glasses or eye shields during operation or while performing an adjustment or repair.

Operation

- Do not put hands or feet near or under rotating parts. Keep clear of the discharge opening at all times.
- Exercise extreme caution when operating on or crossing gravel drives, walks, or roads. Stay alert for hidden hazards or traffic.
- After striking a foreign object, stop the engine, remove the wire from the spark plug, thoroughly inspect the snowthrower for any damage, and repair the damage before restarting and operating the snowthrower.
- If the unit should start to vibrate abnormally, stop the engine and check immediately for the cause. Vibration is generally a warning of trouble.

- Stop the engine whenever you leave the operating position, before unclogging the auger/impeller housing or discharge chute, and when making any repairs, adjustments, or inspections.
- When cleaning, repairing, or inspecting, make certain that the auger/impeller or rotor blades and all moving parts have stopped. Disconnect the spark-plug wire, and keep the wire away from the plug to prevent someone from accidentally starting the engine.
- Do not run the engine indoors, except when starting it and for moving the snowthrower in or out of the building. Open the outside doors; exhaust fumes are dangerous.
- Do not clear snow across the face of slopes. Exercise extreme caution when changing direction on slopes. Do not attempt to clear steep slopes.
- Never operate the snowthrower without proper guards, plates, or other safety protective devices in place.
- Never operate the snowthrower near glass enclosures, automobiles, window wells, drop-offs, etc. without proper adjustment of the snow discharge angle. Keep children and pets away.
- Do not overload the machine capacity by attempting to clear snow at too fast a rate.
- Never operate the machine at high transport speeds on slippery surfaces. Look behind and use care when moving in reverse.
- Never direct discharge at bystanders or allow anyone in front of the unit.
- Disengage power to the auger/impeller or rotor blades when snowthrower is transported or not in use.
- Use only attachments and accessories approved by Toro, such as wheel weights, counterweights, cabs, etc. (Contact your Authorized Service Dealer for accessories available for your snowthrower.)
- Never operate the snowthrower without good visibility or light. Always be sure of your footing, and keep a firm hold on the handles. Walk; never run.

Maintenance and storage

- Check all fasteners at frequent intervals for proper tightness to be sure that the equipment is in safe working condition.
- Never store the machine with fuel in the fuel tank inside a building where ignition sources are present, such as hot water and space heaters, clothes dryers, etc. Allow the engine to cool before storing in any enclosure.
- Always refer to this operator's manual for important details if the snowthrower is to be stored for an extended period.
- Maintain or replace safety and instruction labels when necessary.
- Run the machine a few minutes after throwing snow to prevent freeze-up of the auger/impeller or rotor blades. With the engine running, stay in the operating position and disengage the auger/impeller or rotor blades, shift the traction into the neutral position, and pull the recoil starter handle several times to prevent it from freezing up. (Pulling on the recoil starter rope produces a loud, clattering sound. This does not harm the engine or the starter.)

Toro Snowthrower Safety

The following list contains safety information specific to Toro products or other safety information that you must know that is not included in the ANSI or ISO standards.

- **The rotating auger/impeller or rotor blades can cut off or injure fingers or hands.** Stay behind the handles and away from the discharge opening while operating the snowthrower. **Keep your face, hands, feet, and any other part of your body or clothing away from concealed, moving, or rotating parts.**
- Before adjusting, cleaning, repairing, and inspecting the snowthrower, and before unclogging the discharge chute, **stop the engine, remove the key, and wait for all moving parts to stop**. Also, disconnect the wire from the spark plug and keep it away from the plug to prevent someone from accidentally starting the engine.
- Use a stick, **not your hands**, to remove obstructions from the discharge chute.
- **Before** leaving the operator's position behind the handles, stop the engine, remove the key, and wait for all moving parts to stop.
- Do not wear loose-fitting clothing that could get caught in moving parts.
- If a shield, safety device, or decal is damaged, illegible, or lost, repair or replace it before beginning operation. Also, tighten any loose fasteners.
- **Do not** smoke while handling gasoline.
- For two-stage snowthrowers, use the lower gear and, for Power Shift snowthrowers, the rear wheel position when operating on slopes.
- **Do not** use the snowthrower on a roof.
- Do not touch the engine while it is running or soon after it has stopped because the engine will be hot enough to cause a burn. Do not add oil or check the oil level in the crankcase when the engine is running.
- Perform only those maintenance instructions described in this manual. Before performing any maintenance, service, or adjustment, stop the engine, remove the key and disconnect the wire from the spark plug, keeping it

away from the plug to prevent someone from accidentally starting the engine. If major repairs are ever needed, contact your Authorized Service Dealer.

- Do not change the governor settings on the engine.
- When storing the snowthrower for more than 30 days, drain the gasoline from the fuel tank to prevent a potential hazard. Store gasoline in an approved fuel container. Remove the key from the ignition switch before storing the snowthrower.
- To ensure the best performance and safety, purchase only genuine Toro replacement parts and accessories.

Sound Pressure Level

This unit has a sound pressure at the operator's ear of 90 dB(A), based on measurements of identical machines per Directive 81/1051/EEC.

Sound Power Level

This unit has a sound power level of 101 LwA, based on measurements of identical machines per Directive 79/113/EEC.

Vibration Level

This unit has a maximum hand-arm vibration level of 14.3 m/s^2, based on measurements of identical machines per EN 1033.

Before Operating

Read and understand the contents of this manual before operating the snowthrower. Become familiar with all controls and know how to stop the engine quickly.

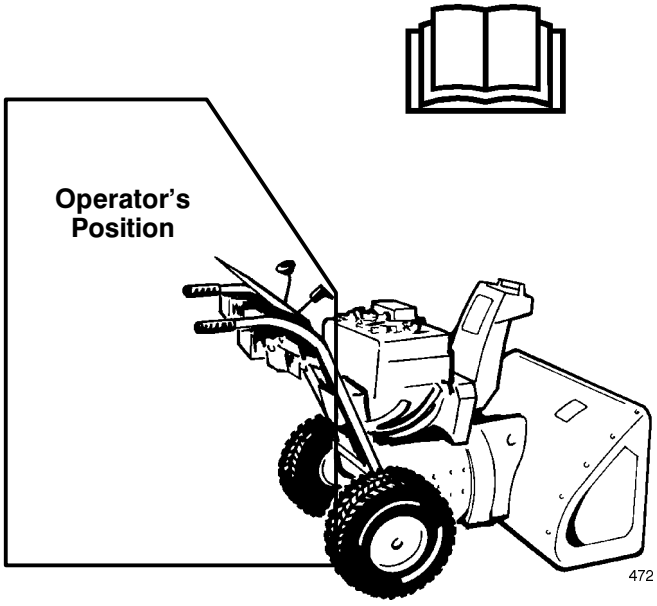

Caution: Improper use may result in loss of fingers, hands, or feet.

There is a high-speed impeller within two inches of the opening.

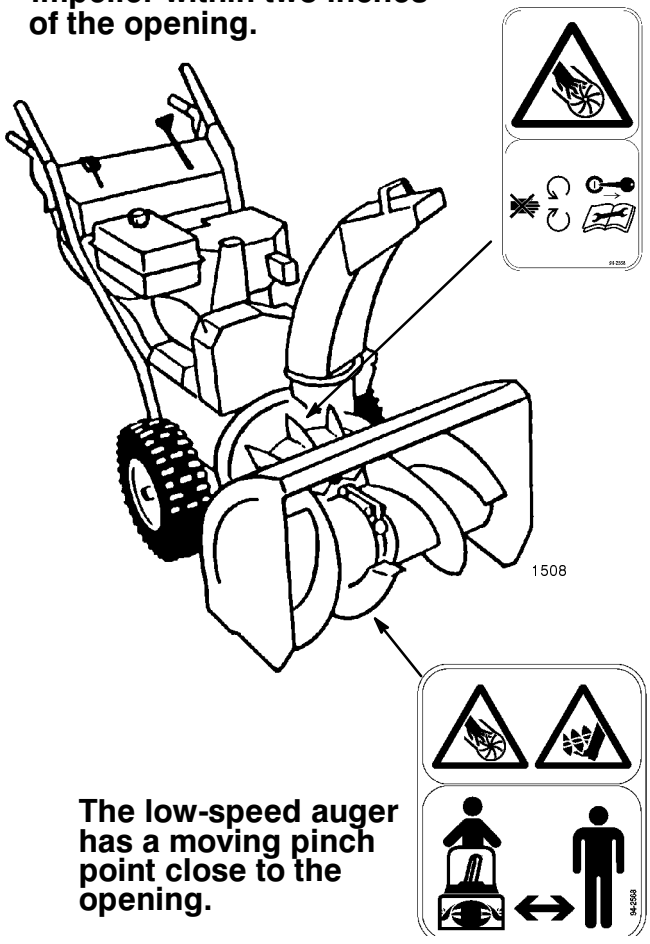

The low-speed auger has a moving pinch point close to the opening.

Symbol Glossary

Safety alert triangle – symbol within triangle indicates a hazard



Safety alert symbol



Read operator's manual



Consult technical manual for proper service procedures



Shut off engine and remove key before performing maintenance or repair work



Shut off engine and remove key before leaving operator position – single stage snowthrower



Shut off engine and remove key before leaving operator position – two stage snowthrower



Severing of fingers or hand – impeller blade



Do not open or remove safety shields while engine is running

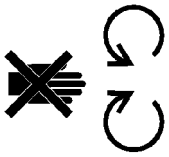

Stay a safe distance from the machine

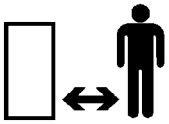

Stay a safe distance from the machine – single stage snowthrower



Stay a safe distance from the machine – two stage snowthrower

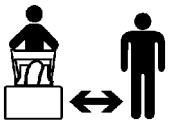

Thrown or flying objects – Whole body exposure

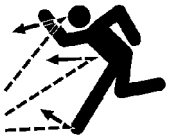

Electrical shock – electrocution



Cutting or entanglement of foot – rotating auger



Electric start

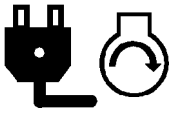

Hot surfaces – burns to fingers or hands



Caustic liquids – chemical burns to fingers or hands



Do not tip battery

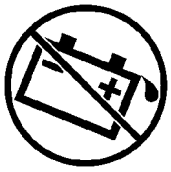

Keep dry



Machine travel direction – forward



Machine travel direction – rearward



On/start



Off/stop

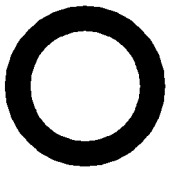

Machine loss of control – uphill slope



Machine loss of control – downhill slope



Traction drive



Snowthrower collector auger

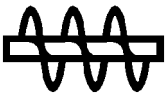

Engage

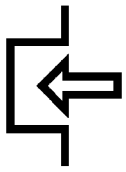

Disengage

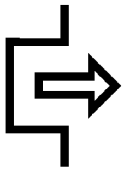

Choke

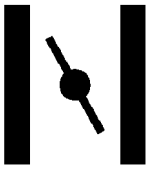

Engine speed (Throttle)



Fast



Slow



Decreasing/Increasing



Engine start

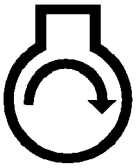

Engine stop



Snowthrower chute direction



Primer (start aid)



Primer operation

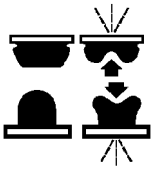

Neutral



Snowthrower collector auger/impeller



Lock



Unlock



Lever operation

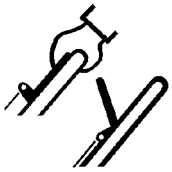

Lever operation



Unleaded fuel



Cutting of fingers or hand



Throttle operation

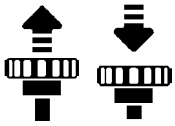

Cutting of foot



PowerShift operation

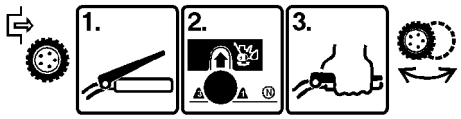

Assembly

Note: Determine the left and right sides of the snowthrower by standing in the normal operating position.

Loose Parts

DESCRIPTION	QTY.	USE
Cap screws and curved washers	4	Installing the handle
Cotter pin Flat washer	1 1	Installing on the speed selector rod
Clevis pin Cotter pin Locking flange nuts	1 1 2	Installing the traction rod and the auger/impeller drive control linkage
Locknuts Rod bracket assembly Cap screw Pyramid washer	2 1 1 1	Installing the chute control rod
Carriage bolt Rubber washer Friction plate Large flat washer Curved washer Locknut	1 1 1 1 1 1	Securing the chute deflector
Key	1	Starting and stopping the engine

Installing the Handle

1. Remove the tie straps that secure the control rods to the handle.
2. Remove the axle pins from both wheels and slide the wheels outward on the axle approximately one inch (2.5 cm) to make room for assembling the handles (Fig. 2).

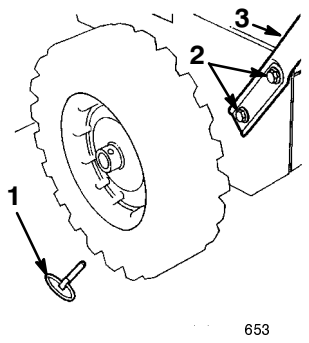

Figure 2

1. Axle pin
2. Cap screws and curved washers
3. Handle

3. Thread a flange nut (not the locking flange nut) with the flange down onto the traction control rod attached to the left handle (Fig. 3).

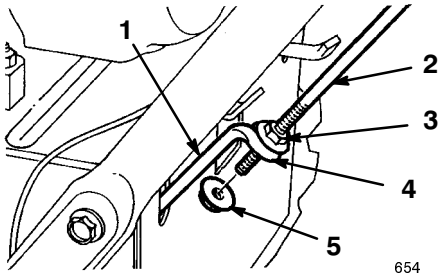

Figure 3

1. Lower traction rod
2. Traction rod
3. Flange nut
4. Loop
5. Locking flange nut

4. Position the left handle against the side of the snowthrower and insert the end of the traction rod through the loop in the lower traction rod (Fig. 3).

5. Align the left handle mounting holes with the holes in the left side plate, and secure the handle with two cap screws and curved washers until they are finger tight (Fig. 2).

Note: The concave side of the curved washer goes against the outside of the handle.

6. Align the right handle mounting holes with the holes in the right side plate, and secure the handle with two cap screws and curved washers until they are finger tight.

7. Make sure that the handles are at the same height, then tighten the handle fasteners securely.

8. Slide the wheels inward and install the axle pin through the holes in the wheel hub and through the **inner** hole of the axle (Fig. 4).

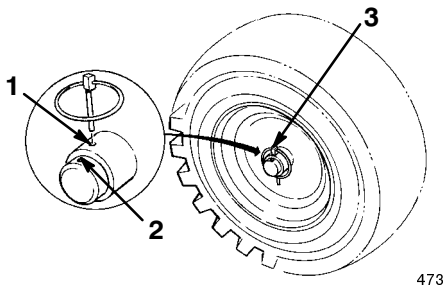

Figure 4

1. Inner axle hole and wheel hub
2. Outer axle hole
3. Axle pin

Note: If your snowthrower has the optional tire chains, install the axle pin through the **outer** axle holes.

Installing the Speed Selector Rod

1. Pull the speed selector arm (Fig. 5) to the most outward position.

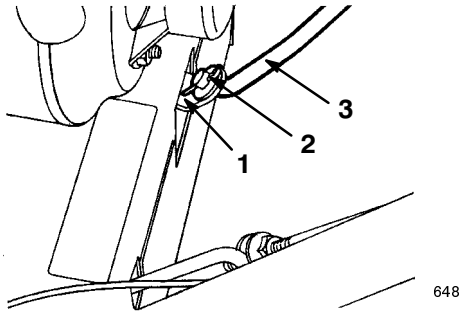

Figure 5

1. Speed selector arm
2. Flat washer and cotter pin
3. Speed selector rod

2. Move the speed selector (Fig. 6) on the control panel to the *R* (*Reverse*) position.

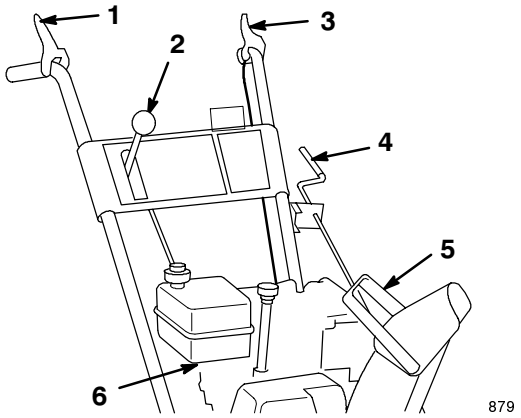

Figure 6

1. Auger/impeller drive control lever
2. Speed selector
3. Traction control lever
4. Discharge chute control
5. Chute deflector handle
6. Fuel shutoff valve

3. Install the speed selector rod into the selector arm, add one flat washer on the selector rod, and secure it with a cotter pin (Fig. 5).

Installing the Traction Rod

1. Thread the locking flange nut (flange side up) onto the bottom of the traction control rod, below the loop in the lower traction rod (Fig. 3).
2. Adjust the two flange nuts up or down on the traction rod until the distance between the top of the handgrip and the bottom of the traction control lever (Figs. 6 and 7) is approximately 4 3/8 inches (11 cm).

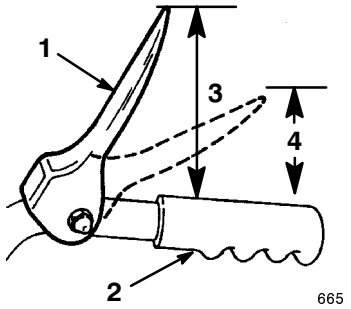

Figure 7

1. Traction control lever
2. Handgrip
3. 4 3/8 inches (11 cm)
4. 1 to 2 inches (2.5 to 5 cm)

3. Tighten the two flange nuts until they are finger tight.
4. Move the speed selector (Fig. 6) into third gear.

   Note: If the speed selector does not move into third gear, adjust the speed selector before continuing. Refer to *Adjusting the Speed Selector* on page 23.
5. Slowly pull the snowthrower backward while slowly pressing the traction control lever toward the handle.

   Note: The adjustment is correct when the wheels stop rolling backward and the distance between the top of the handgrip and the bottom of the traction control lever is one to two inches (2.5 to 5 cm) (Fig. 7).
6. Adjust the two flange nuts, if necessary, to obtain this dimension.
7. Tighten the flange nuts securely.

Installing the Auger/Impeller Drive Control Linkage

1. Loosen the jam nut above the clevis on the upper control rod (Fig. 8).

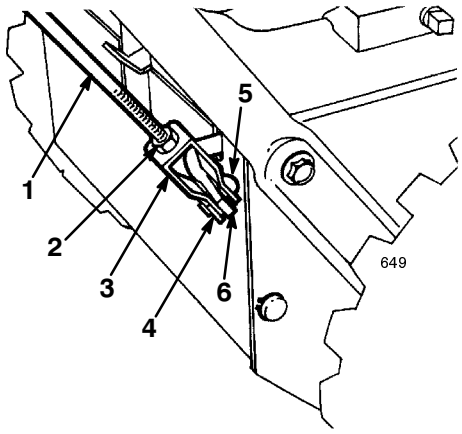

Figure 8

1. Upper control rod
2. Jam nut
3. Clevis
4. Cotter pin
5. Clevis pin
6. Lower control rod

2. Align the holes in the clevis and the lower control rod and insert the clevis pin (Fig. 8).

3. Check the distance between the top of the handgrip and the bottom of the auger/impeller drive control lever (Figs. 6 and 9). The distance should be approximately four inches (10 cm).

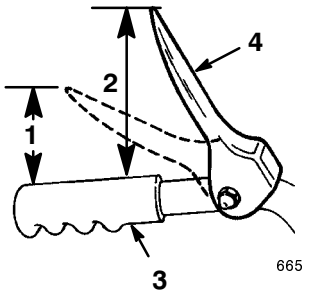

Figure 9

1. 1 to 2 inches (2.5 to 5 cm)
2. 4 inches (10 cm)
3. Handgrip
4. Auger/impeller control lever

4. Press the auger/impeller drive control lever slowly toward the handgrip.

   The amount of force to compress the lever increases noticeably when you remove the slack from the drive belt (approximately one-half of the lever movement). The adjustment is correct when the force **begins** to increase and the distance between the top of the handgrip and the bottom of the auger/impeller drive control lever is one to two inches (2.5 to 5 cm) (Fig. 9).

   Note: If the force does not noticeably increase, remove the belt cover (refer to *Replacing the Auger/Impeller Drive Belt*, steps 1 and 2 on page 22) and measure two inches (5 cm) above the handgrip at the point where you remove the slack from the auger/impeller drive belt.

5. To adjust the distance:

   A. Remove the clevis pin.

   B. Loosen the jam nut.

   C. Thread the clevis up or down to increase or decrease the distance between the handgrip and the auger/impeller drive control lever (Fig. 8).

6. When the adjustment is correct, install the clevis pin and secure it in place with the cotter pin (Fig. 8).

7. Tighten the jam nut to secure the clevis (Fig. 8).

Installing the Chute Control Rod

1. Assemble the chute control bracket and rod to the left side of the handle with a cap screw and a locknut. Leave the locknut loose (Fig. 10).

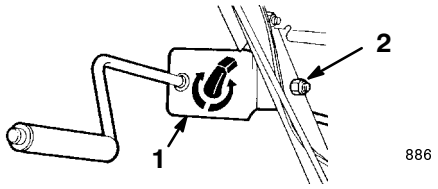

Figure 10

1. Chute control bracket and rod
2. Cap screw and locknut

2. Apply No. 2 general purpose grease to the worm gear (Fig. 11).

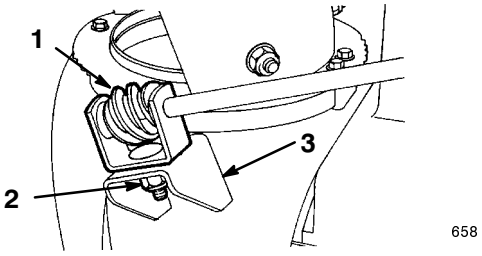

Figure 11

1. Worm gear and bracket
2. Bolt, pyramidal washer, and locknut
3. Mounting flange

3. Loosely mount the worm gear and the bracket to the mounting flange with a bolt, a pyramidal washer, and a locknut (Fig. 11).

4. Slide the worm gear into the teeth of the chute retaining ring and tighten the locknut (Fig. 11).

5. Tighten the locknut that secures the chute control bracket (Fig. 10).

6. Check the operation of the chute control rod, moving the worm gear slightly outward if it binds.

Securing the Chute Deflector

1. Pivot the deflector upward and back until the deflector stop passes over the lip on the top of the chute.

2. Secure the left side of the deflector to the discharge chute as shown in Figure 12.

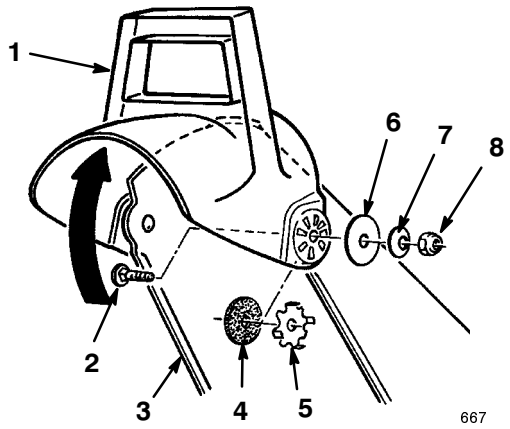

Figure 12

1. Deflector
2. Carriage bolt
3. Chute
4. Rubber washer
5. Friction plate
6. Large flat washer
7. Curved washer
8. Locknut

Note: Position the rubber washer and the friction plate between the chute and deflector, with the friction plate tabs fitting into the holes in the deflector.

Note: The concave side of the curved washers go against the large flat washers.

3. Tighten the nuts on both sides of the deflector. Do not overtighten the nuts.

Checking the Tire Pressure

Check the pressure of the tires because they are overinflated at the factory for shipping. Reduce the pressure equally in both tires to between 7 and 15 psi (48 and 103 kPa).

Before Starting

Filling the Engine with Oil

The engine comes from the factory with only a few ounces of oil in the crankcase. Before starting the engine, add oil. The crankcase holds 21 ounces (0.62 liters) of oil; however, because there is some oil in the crankcase, do not add the full amount at one time. Gradually add the oil according to the following procedure:

1. Move the snowthrower to a level surface to ensure an accurate oil level reading.

2. Clean the area around the dipstick (Fig. 13).

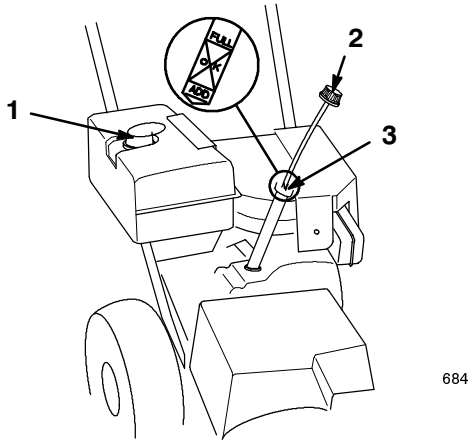

Figure 13

1. Fuel tank cap
2. Dipstick
3. Filler hole

3. Remove the dipstick from the crankcase (Fig. 13).

4. Slowly pour 3/4 of the total capacity of oil into the crankcase.

   Use only a high-quality, SAE 5W-30 or SAE 10 weight detergent oil that has the American Petroleum Institute (API) "service classification"—SF, SG, SH, or SJ. For extremely cold conditions (below 0°F or -18°C), use 0W-30 weight detergent oil that has the American Petroleum Institute (API) "service classification"—SF, SG, SH, or SJ.

5. Wipe the dipstick clean with a clean cloth.

6. Fully install the dipstick.

Note: To ensure an accurate oil level reading, you must fully install the dipstick.

7. Remove the dipstick.

8. Read the oil level on the dipstick.

9. If the oil level is below the *Full* mark, slowly add oil, checking the level frequently (steps 5 through 8), until the dipstick reads *Full*.

IMPORTANT: Do not overfill the crankcase and run the engine; engine damage will result. Drain the excess oil until the oil level on the dipstick reads *Full*.

Filling the Fuel Tank With Gasoline

Use clean, fresh, lead-free gasoline (including *oxygenated* or *reformulated* gasoline) with an octane rating of 87 or higher. To ensure freshness, purchase only the quantity of gasoline that can be used in 30 days. Using unleaded gasoline results in fewer combustion chamber deposits and longer spark plug life.

IMPORTANT: Do not use methanol, gasoline containing methanol, gasohol containing more than 10% ethanol, premium gasoline, or white gas. Using these fuels can damage the engine's fuel system.

DANGER

POTENTIAL HAZARD
- **In certain conditions gasoline is extremely flammable and highly explosive.**

WHAT CAN HAPPEN
- **A fire or explosion from gasoline can burn you and others and cause property damage.**

HOW TO AVOID THE HAZARD
- **Fill the fuel tank outdoors, in an open area, and when the engine is cold. Wipe up any gasoline that spills.**
- **Do not fill the fuel tank completely full. Add gasoline to the fuel tank until the level is 1/4 to 1/2 inch (6 to 13 mm) below the bottom of the filler neck. This empty space in the tank allows the gasoline to expand.**
- **Never smoke when handling gasoline, and stay away from an open flame or where a spark may ignite gasoline fumes.**
- **Store gasoline in an approved fuel container and keep it out of the reach of children.**
- **Never buy more than a 30-day supply of gasoline.**

DANGER

POTENTIAL HAZARD
- **When fueling, under certain circumstances, a static charge can develop, igniting the gasoline.**

WHAT CAN HAPPEN
- **A fire or explosion from gasoline can burn you and others and cause property damage.**

HOW TO AVOID THE HAZARD
- **Always place gasoline containers on the ground away from your vehicle before filling.**
- **Do not fill gasoline containers inside a vehicle or on a truck or trailer bed because interior carpets or plastic truck bed liners may insulate the container and slow the loss of any static charge.**
- **When practical, remove gas-powered equipment from the truck or trailer and refuel the equipment with its wheels on the ground.**
- **If this is not possible, then refuel such equipment on a truck or trailer from a portable container, rather than from a gasoline dispenser nozzle.**
- **If you must use a gasoline dispenser nozzle, keep the nozzle in contact with the rim of the fuel tank or container opening at all times until fueling is complete.**

Use a fuel stabilizer/conditioner regularly during operation and storage. A stabilizer/conditioner cleans the engine during operation and prevents gum-like varnish deposits from forming in the engine during storage.

IMPORTANT: Do not use fuel additives other than a fuel stabilizer/conditioner. Do not use fuel stabilizers with an alcohol base such as ethanol, methanol, or isopropanol.

1. Clean the area around the fuel tank cap (Fig. 13).
2. Remove the cap from the fuel tank.
3. Using unleaded, regular gasoline, fill the tank to within 1/4 to 1/2 inch (6 to 13 mm) from the top of the tank.

IMPORTANT: Do not fill the tank with gasoline into the filler neck. This space is for expansion of fuel. Do not fill the tank completely full.

4. Install the fuel tank cap.
5. Wipe up any spilled gasoline.

Operation

Controls

The following list contains descriptions of the snowthrower controls:

- **Auger/Impeller Drive Control Lever** (Fig. 14)—To engage both the auger and impeller, press the lever against the right handgrip. To disengage, release the lever.

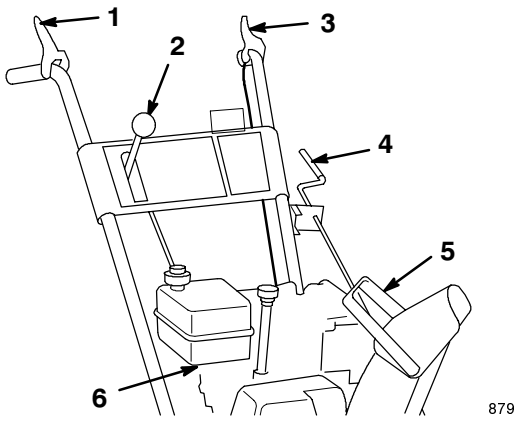

Figure 14

1. Auger/impeller drive control lever
2. Speed selector
3. Traction control lever
4. Discharge chute control
5. Chute deflector handle
6. Fuel shutoff valve

- **Speed Selector** (Fig. 14)—This control has four positions: three forward speeds and one reverse. To change speeds, move the gear shift to the desired position. The lever locks in a notch at each speed selection.
- **Traction Control Lever** (Fig. 14)—To engage the traction (wheel drive), press the lever against the left handgrip. To stop traction, release the lever.
- **Discharge Chute Control** (Fig. 14)—Rotate the discharge chute control clockwise to move the discharge chute to the left; counterclockwise to move the chute to the right.
- **Chute Deflector Handle** (Fig. 14)—Move the deflector handle forward to move the snow stream down; move it rearward to move the snow stream up.
- **Fuel Shutoff Valve** (Fig. 14)—Close the valve by rotating it to the right to stop the fuel flow from the fuel tank. Open the valve by rotating it to the left. Close the valve when you do not use the snowthrower.
- **Choke** (Fig. 15)—Move the choke to the *Full* position to start a cold engine. As engine warms up, gradually move the choke to the *Off* position.

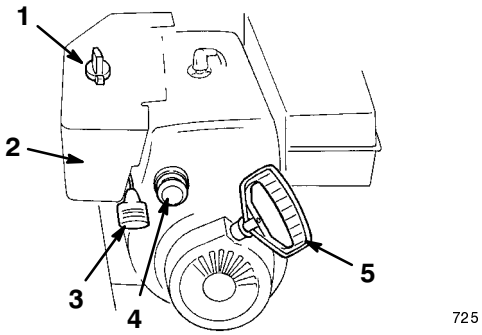

Figure 15

1. Choke
2. Ignition switch
3. Throttle
4. Primer
5. Recoil starter

- **Ignition Switch** (Fig. 15)—Insert the key before starting the engine. To stop the engine, remove the key.
- **Throttle** (Fig. 15)—Move the throttle upward to increase the engine speed; move it downward to decrease the engine speed.
- **Primer** (Fig. 15)—Press the primer to pump a small amount of gasoline into the engine for improved cold-weather starting.
- **Recoil Starter** (Fig. 15)—Pull the recoil starter to start the engine.

Removing the Heater Box

If you operate the engine when the air temperature is above 40°F (4°C), remove the carburetor heater box (Fig. 16).

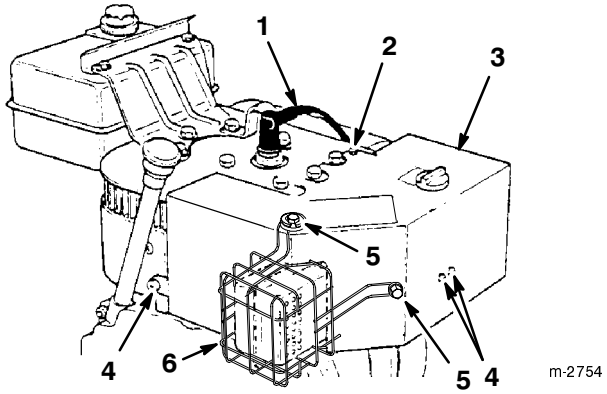

Figure 16

1. Spark plug wire
2. Hex head screw
3. Carburetor heater box
4. Phillips screws
5. Screws, lock washers, and washers
6. Muffler guard

1. Disconnect the wire from the spark plug and make sure that the wire does not contact the plug (Fig. 16).
2. Remove the key from the ignition switch (Fig. 15).
3. Pull the choke knob off (Fig. 15).
4. Remove two Phillips screws, two hex head screws, and one lock washer that secure the carburetor heater box in place (Fig. 16).

   Note: Install these fasteners in their holes for safe keeping.
5. Lift the heater box up and away from the engine.
6. Disconnect the green ground wire clip under the throttle (Fig. 17).

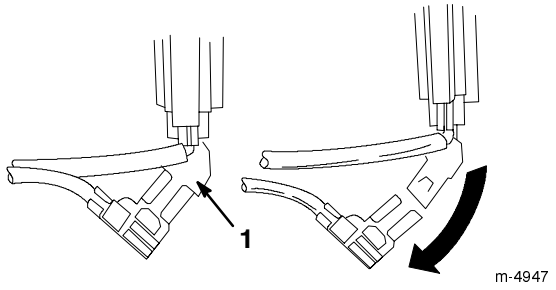

Figure 17

1. Green ground wire clip

7. Install the choke knob.
8. Connect the wire to the spark plug.

IMPORTANT: Use the heater box as a reference for the choke and throttle positions.

Installing the Heater Box

To install the heater box, reverse steps 1 through 8 of *Removing the Heater Box* on page 15. Make sure that you remove the fasteners from their holes before installing the heater box.

Starting the Engine

IMPORTANT: Make sure that the auger/impeller and the discharge chute contain no obstructions before you operate the snowthrower. *Use a stick, not your hand, to remove an obstruction from the discharge chute.*

1. Move the throttle to the *Fast* position (Fig. 15).
2. Make sure that the auger/impeller drive control lever and the traction control lever are in the *Disengaged* position (Fig. 14).
3. Open the fuel shutoff valve below the fuel tank (Fig. 18).

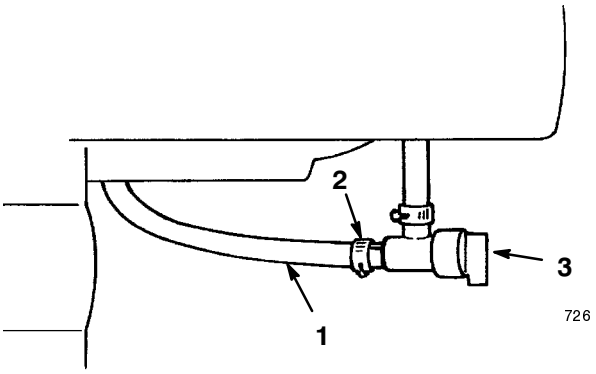

Figure 18

1. Fuel line
2. Hose clamp
3. Fuel shutoff valve

4. Rotate the choke (Fig. 15) to the *Full* position.
5. Insert the ignition key (Fig. 15).

IMPORTANT: Do not use the primer if the engine has been running and is hot. Excessive priming may flood the engine and prevent it from starting.

6. Cover the hole in the center of the primer (Fig. 15) with your thumb and slowly push in the primer three times, pausing after each push.
7. Grasp the recoil starter handle (Fig. 15) and pull it out slowly until positive engagement results; then pull the handle vigorously to start the engine.
8. Keep a firm grip on the starter handle and return the rope slowly.

Note: If engine does not start or if the air temperature is –10°F (–23°C) or below, the engine may need additional priming. After pushing in the primer, try to start the engine before priming again.

9. After the engine starts, immediately rotate the choke (Fig. 15) to the 3/4 position. As the engine warms up, rotate the choke to the 1/2 position. When the engine warms up sufficiently, rotate the choke to the *Off* position.
10. Move the speed selector (Fig. 14) to first gear, squeeze the traction control lever to the handgrip, and then release the traction control lever. If the snowthrower moves forward before engaging the traction drive control lever or after releasing the lever, see *Adjusting the Traction Drive* on page 20.

IMPORTANT: Do not operate the snowthrower if the auger and impeller rotate when you disengage the auger/impeller drive control lever.

Stopping the Engine

1. Engage the auger to clear any remaining snow from inside the housing.

2. Run the engine for a few minutes to dry off any accumulated moisture.
3. With the engine running, pull the recoil starter with a rapid, continuous full arm stroke three or four times. This helps prevent the recoil starter from freezing up.

   Note: Pulling the recoil starter rope produces a loud, clattering sound. This does not harm the engine or the starter.
4. Release the traction control and the auger/impeller drive control levers (Fig. 14).
5. Stop the engine by doing one of the following:

   A. Move the throttle to the *Slow* position, and remove the key from the ignition switch.

   B. Move the throttle to the *Stop* position.
6. Close the fuel shutoff valve (Fig. 18).
7. Wait for all moving parts to stop before leaving the operating position.

Freewheeling or Self-propel Drive

You can operate the snowthrower with the self-propelling feature engaged or disengaged (freewheeling). There are two holes in each end of the axle. When you insert the axle pins through the outer axle holes and not through the wheel hubs (Fig. 4), the snowthrower freewheels. When you insert the axle pins through the holes in the wheel hubs and the inner axle holes (Fig. 4) and engage the traction control lever, the snowthrower propels itself.

Snowthrowing Tips

DANGER

POTENTIAL HAZARD
- **When the snowthrower is in operation, the impeller and auger can be rotating.**

WHAT CAN HAPPEN
- **The rotating auger/impeller can cut off or injure hands and feet.**

HOW TO AVOID THE HAZARD
- **Before adjusting, cleaning, repairing and inspecting the snowthrower, and before unclogging the discharge chute, *stop the engine and wait for all moving parts to stop.* Disconnect the wire from the spark plug and keep it away from the plug to prevent someone from accidentally starting the engine.**
- **Use a stick, *not your hands*, to remove an obstruction from the discharge chute.**
- **Stay behind the handles and away from the discharge opening while operating the snowthrower.**
- **Keep face, hands, feet, and any other part of your body or clothing away from concealed, moving, or rotating parts.**

WARNING

POTENTIAL HAZARD
- **Stones, toys, and other foreign objects may be picked up and thrown by the auger/impeller.**

WHAT CAN HAPPEN
- **Thrown objects can cause serious personal injury to the operator or to bystanders.**

HOW TO AVOID THE HAZARD
- **Keep the area to be cleared free of all objects that could be picked up and thrown by the auger/impeller.**
- **Keep all children and pets away from area of operation.**

- When you are not using the snowthrower, close the fuel shutoff valve and remove the key.
- Remove snow as soon as possible after it falls. This produces the best snow removal results.
- Adjust the skids to match the type of surface being cleaned. Refer to *Adjusting the Skids and the Scraper* on page 22.

- There are times when the front of the snowthrower may tend to ride up. If this happens, reduce the forward speed by shifting into a lower gear. If the front still tends to ride up, lift up on both handles to hold down the front of the snowthrower.
- Discharge the snow downwind whenever possible.
- Overlap each swath to ensure complete snow removal.
- If the wheels slip, shift the snowthrower into a lower gear to reduce the forward speed.
- Run the snowthrower for a few minutes after clearing the snow so that moving parts do not freeze. Engage the auger to clear any remaining snow from inside the housing.
- Do not overload the snowthrower by clearing snow at too fast a rate. If the engine slows down, shift the snowthrower into a lower gear to reduce the forward speed.
- Always use the *Fast* throttle position when throwing snow.
- In wet or slushy conditions, maintain the maximum engine speed, and do not overload the engine to prevent clogging the discharge chute.
- In some snowy and cold weather conditions, some controls and moving parts may freeze. Therefore, whenever any control becomes hard to operate, stop the engine and wait for all moving parts to stop; then check all parts for freeze up. **Do not use excessive force when trying to operate frozen controls.**

Maintenance

Recommended Maintenance Schedule

Service Item	Service Operation	Initial	5 Hours	10 Hours	15 Hours	25 Hours	100 Hours	At Storage
Check the engine oil level	Check the oil level **before each use** and add oil if necessary.	X	X	X	X	X		X
Change the engine oil	Change the engine oil.					X		X
Auger gear box	Check the auger gear box grease. Add grease if necessary.	X		X				X
Adjust the traction drive	Adjust the traction drive.	X	X		X	X		
Replace the traction drive belt	Replace the traction drive belt as needed.							
Adjust the auger/impeller drive belt	Adjust the auger/impeller drive belt as needed.		X		X	X		
Replace the auger/impeller drive belt	Replace the auger/impeller drive belt as needed.							
Skids and the scraper	Adjust the skids and the scraper blade.	X			X			

Service Item	Service Operation	Initial	5 Hours	10 Hours	15 Hours	25 Hours	100 Hours	At Storage
Speed selector	Adjust the speed selector as needed.	X						
Lubricating the snowthrower	Oil and grease the internal moving parts.				X			X
Spark plug	Clean, inspect, and gap. Replace if necessary.						X	
Fuel tank	Drain the gasoline and run the engine to dry out the tank and the carburetor.							X

CAUTION

POTENTIAL HAZARD
- **If you leave the wire on the spark plug, someone could start the engine.**

WHAT CAN HAPPEN
- **Someone accidentally starting the engine could seriously injure you or other bystanders.**

HOW TO AVOID THE HAZARD
- **Disconnect the wire from the spark plug before you do any maintenance. Set the wire aside so that it does not accidentally contact the spark plug.**

Checking the Engine Oil Level

Check the oil level every five operating hours or each time you use the snowthrower.

1. Move the snowthrower to a level surface.
2. Clean the area around the dipstick (Fig. 13).
3. Remove the dipstick from the crankcase.
4. Wipe the dipstick clean with a clean cloth.
5. Fully install the dipstick.

Note: To ensure an accurate oil level reading, you must fully install the dipstick.

6. Remove the dipstick (Fig. 13).
7. Read the oil level on the dipstick (Fig. 13).
8. If the oil level is below the *Full* mark, slowly add oil, checking the level frequently, until the dipstick reads *Full*.

   Use only a high-quality, SAE 5W–30 or SAE 10 weight detergent oil that has the American Petroleum Institute (API) "service classification"—SF, SG, SH, or SJ. For extremely cold conditions (below 0°F or –18°C), use 0W–30 weight detergent oil that has the American Petroleum Institute (API) "service classification"—SF, SG, SH, or SJ.

IMPORTANT: Do not overfill the crankcase and run the engine; engine damage will result. Drain the excess oil until the oil level on the dipstick reads *Full*.

9. Install the dipstick.

Changing the Engine Oil

Initially, change the oil after the first two hours of engine operation; thereafter, under normal conditions, change the oil as given in the *Recommended Maintenance Schedule* on page 18. If possible, run the engine just before changing the oil because warm oil flows better and carries more contaminants.

1. Disconnect the wire from the spark plug and make sure that the wire does not contact the plug (Fig. 16).
2. Block up the rear of the snowthrower chassis.
3. Remove the left wheel.

4. Clean the area around the oil drain plug (Fig. 19).

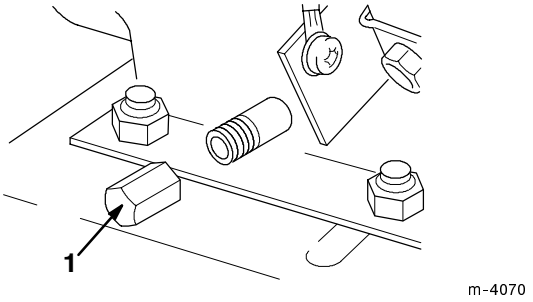

Figure 19

1. Drain plug

5. Slide the oil drain pan below the drain extension and remove the oil drain plug (Fig. 19).
6. After draining the oil, install the oil drain plug.
7. Install the left wheel.
8. Fill the crankcase with oil. Refer to *Filling the Engine Crankcase with Oil* on page 13.
9. Wipe up any spilled oil.

Checking the Auger Gear Box Grease

Check the auger gear box grease as given in the *Recommended Maintenance Schedule* on page 18.

1. Disconnect the wire from the spark plug and make sure that the wire does not contact the plug (Fig. 16).
2. Move the snowthrower to a level surface.
3. Clean the area around the pipe plug (Fig. 20).

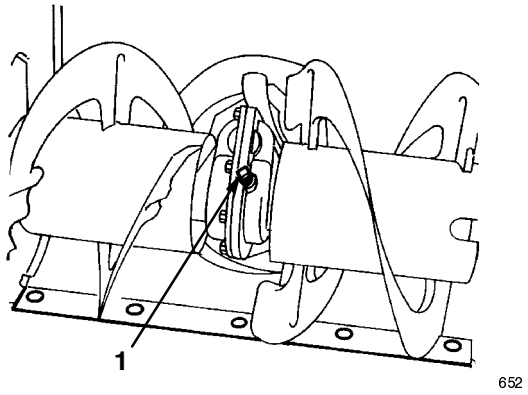

Figure 20

1. Pipe plug

4. Remove the pipe plug from the gear box (Fig. 20).
5. Check the level of grease in the gear box. The grease must be visible through the opening.
6. If the level of grease is low, add *Lubriplate MAG-1* grease (a low-temperature, high-pressure grease) to the gear box until point of overflow.
7. Install the pipe plug in the gear box.

Adjusting the Traction Drive

If the speed selector shifts properly but the snowthrower does not drive in the forward or reverse speeds, adjust the traction drive.

1. Disconnect the wire from the spark plug and make sure that the wire does not contact the spark plug (Fig. 16).
2. Check and adjust the traction drive as described in steps 5 through 7 of *Installing the Traction Rod* on page 11.
3. If the problem persists after adjusting the linkage, contact your local Authorized Service Dealer.

Replacing the Traction Drive Belt

If the traction drive belt becomes worn, stretched, oil-soaked, or otherwise damaged, replace the belt. You can obtain a new belt from your Authorized Service Dealer.

1. Disconnect the wire from the spark plug and make sure that the wire does not contact the spark plug (Fig. 16).
2. Drain the gasoline from fuel tank. Refer to *Emptying the Fuel Tank* on page 24.
3. Remove the two screws that hold the belt cover in place and set the cover aside (Fig. 21).

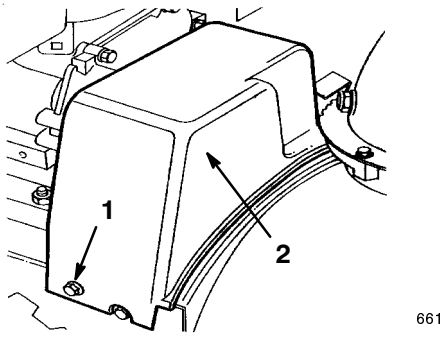

Figure 21

1. Screw (2)
2. Belt cover

4. Loosen the belt guide (Fig. 22).

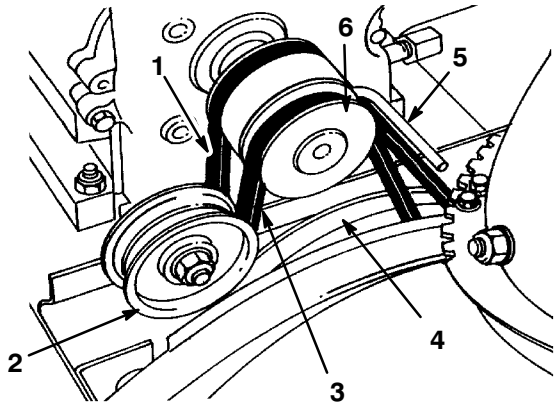

Figure 22

1. Traction drive belt
2. Idler pulley
3. Auger/impeller drive belt
4. Large auger/impeller pulley
5. Belt guide
6. Engine pulley

5. Remove the auger/impeller drive belt from the engine pulley and the large auger/impeller pulley (Fig. 22).

6. Tip the snowthrower forward and block it so that it cannot fall.

7. Remove the four screws that secure the bottom cover to the frame and remove the cover (Fig. 23).

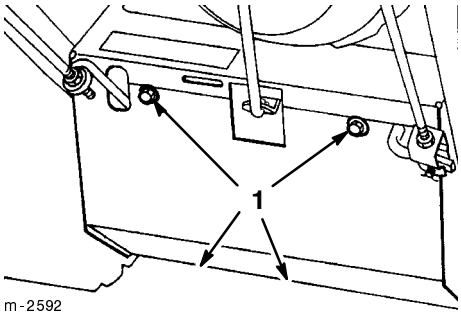

Figure 23

1. Screws

8. Disconnect the spring from the notch in the bottom edge of the side plate (Fig. 24).

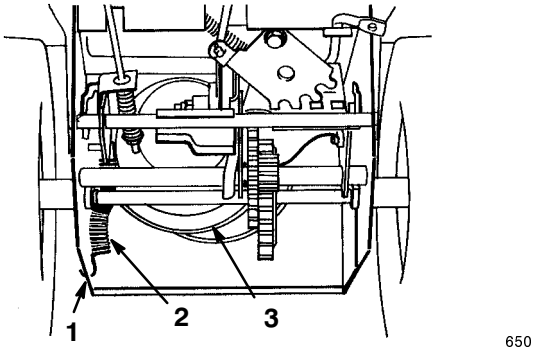

Figure 24

1. Notch in side plate
2. Spring
3. Large traction pulley

CAUTION

POTENTIAL HAZARD
- **The spring is under heavy tension.**

WHAT CAN HAPPEN
- **The spring could be thrown in operator's or bystander's direction.**

HOW TO AVOID THE HAZARD
- **Use caution when removing the spring.**

9. Set the snowthrower upright.

10. Remove the traction drive belt from the engine pulley and the large traction pulley (Fig. 22).

11. Install a new belt around the large traction pulley.

12. Loop the belt over the engine pulley, making sure that the belt is on the inside of the belt guide (Fig. 22).

13. Tip the snowthrower forward and block it so that it cannot fall.

14. Hook the spring into the notch in the bottom edge of the side plate (Fig. 24).

15. Replace the bottom cover with the four screws.

16. Set the snowthrower upright.

17. Install the auger/impeller drive belt around the large auger/impeller pulley and engine pulley, making sure that the belt is on the inside of the idler pulley and belt guide (Fig. 22).

18. Adjust the belt guide so that there is 1/8 inch (3 mm) of clearance between the belt and the guide, and secure the belt guide when the belt is tight.

19. Whenever the auger/impeller drive belt needs replacement, adjust the auger/impeller drive linkage. Refer to steps 4 through 7 of *Installing the Auger/Impeller Drive Control Linkage* on page 11.

20. Install the belt cover.

Adjusting the Auger/Impeller Drive Belt

An auger/impeller belt that slips decreases snowthrowing performance and requires either an adjustment or a new belt.

DANGER

POTENTIAL HAZARD
- **Improper adjustment may cause injury if the auger/impeller turns when disengaged.**

WHAT CAN HAPPEN
- **The rotating impeller or auger can cut off or injure fingers or hands.**

HOW TO AVOID THE HAZARD
- **Keep your face, hands, feet, and any other part of your body or clothing away from concealed, moving, or rotating parts.**
- **Make sure to maintain the impeller brake arm clearance.**
- **Do not adjust the auger/impeller drive belt too tight because it may cause the auger/impeller to turn when the control lever is in the disengaged position. If this occurs, decrease belt tension.**

1. Disconnect the wire from the spark plug and make sure that the wire does not contact the spark plug (Fig. 16).
2. Check and adjust the belt as instructed in steps 4 through 7 of *Installing the Auger/Impeller Drive Control Linkage* on page 11.
3. Connect the spark plug wire to the spark plug and start the engine.
4. Operate the auger/impeller.
5. If belt still slips, replace the belt.

Replacing the Auger/Impeller Drive Belt

If the auger/impeller drive belt (Fig. 22) becomes worn, stretched, oil-soaked, or otherwise damaged, replace the belt. You can obtain a new belt from your Authorized Service Dealer.

1. Disconnect the wire from the spark plug and make sure that the wire does not contact the spark plug (Fig. 16).
2. Remove the two screws that hold the belt cover in place and set the cover aside (Fig. 21).
3. Loosen the belt guide (Fig. 22).
4. Remove the auger/impeller drive belt from the engine pulley and the large auger/impeller pulley (Fig. 22).
5. Install a new belt around the large auger/impeller pulley (Fig. 22).
6. Loop the belt over the engine pulley, making sure that the belt is on the inside of the idler pulley and the belt guide (Fig. 22).
7. Adjust the belt guide so that there is 1/8 inch (3 mm) of clearance between the belt and the guide, and secure the belt guide.
8. Check and adjust the belt as instructed in steps 4 through 7 of *Installing the Auger/Impeller Drive Control Linkage* on page 11.
9. Install the belt cover.

Adjusting the Skids and the Scraper

Adjust the skids and the scraper to compensate for wear and to make sure that the auger does not contact the pavement.

1. Disconnect the wire from the spark plug and make sure that the wire does not contact the spark plug (Fig. 16).
2. Check the tire pressure in the tires. Refer to *Checking the Tire Pressure* on page 13.
3. Move the snowthrower to a level surface.
4. Loosen the four flange nuts that secure both skids to the auger side plates (Fig. 25) until the skids slide up and down easily.

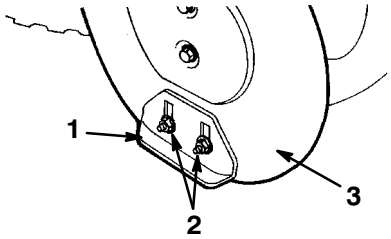

Figure 25

1. Skid
2. Flange nuts
3. Auger side plate

5. Support the **auger blades** so that they are 1/8 inch (3 mm) off the ground (Fig. 26).

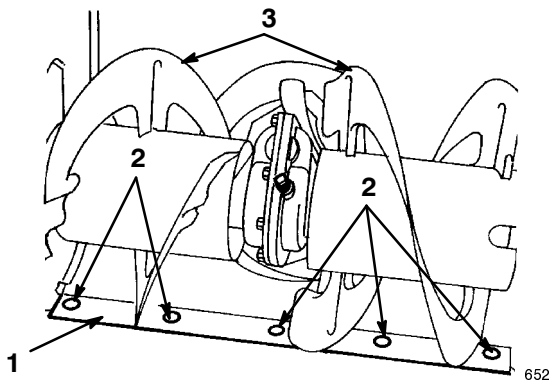

Figure 26

1. Scraper
2. Mounting screws
3. Auger blades

6. Check the scraper adjustment. The scraper should be 1/8 inch (3 mm) above and parallel to a level surface.

For Concrete and Asphalt Surfaces:

If the snowthrower does not clear the snow close enough to the pavement, adjust the skids to lower the scraper; if the pavement surfaces are cracked, rough, or uneven, adjust the skids to raise the scraper.

For Gravel Surfaces:

Support the auger blades a few inches (centimeters) above the ground, and adjust the skids to prevent the snowthrower from picking up rocks.

7. To adjust the scraper, loosen the five mounting screws (Fig. 26), level the blade, and tighten the mounting screws.
8. Move the skids down as far as possible.
9. Tighten the four flange nuts that secure both skids to the auger side plates (Fig. 25).

Adjusting the Speed Selector

If the snowthrower is slow, the No.1 speed selection has no speed, or the speed selector does not move into the No. 3 speed selection, adjust the speed selector linkage.

1. Disconnect the wire from the spark plug and make sure that the wire does not contact the spark plug (Fig. 16).
2. Tip the snowthrower forward and block it so that it cannot fall.
3. Remove the four screws that secure the bottom cover to the frame and remove the cover (Fig. 23).
4. Loosen the flange nuts that secure the selector plate to the control panel (Fig. 27).

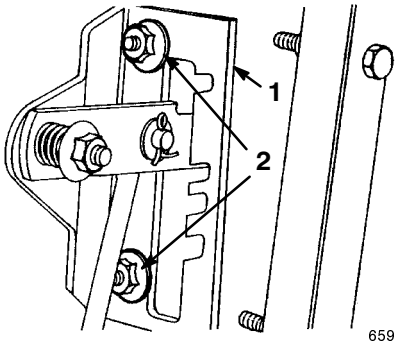

Figure 27

1. Speed selector plate
2. Flange nuts

5. Shift the speed selector to third gear and push down on the speed selector plate to move the drive assembly to the right.

   Note: The drive assembly should be 1/8 inch (3 mm) from the roll pin; if not, slide the selector plate (Fig. 27) until the gap is 1/8 inch (3 mm) (Fig. 28).

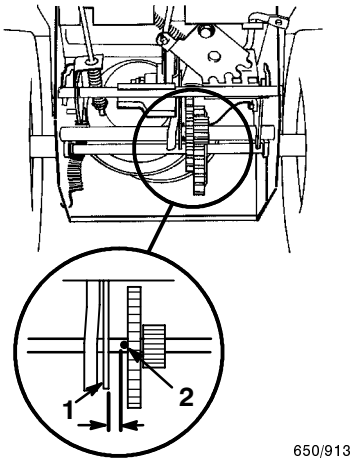

Figure 28

1. Roll pin
2. Drive assembly

6. With the drive assembly 1/8 inch (3 mm) from the roll pin, tighten the flange nuts that secure the speed selector plate.
7. Shift the speed selector to the *R* (*Reverse*) position and back to third gear to check the adjustment.
8. If the space between the roll pin and the drive assembly is more than $^{3}/_{16}$ inch (5 mm), repeat steps 4 through 7.
9. Install the bottom cover and return the snowthrower to the upright position.

Lubricating the Snowthrower

Lubricate all moving parts of the snowthrower according to the *Recommended Maintenance Schedule* on page 18.

IMPORTANT: Do not get oil or grease on the rubber wheel or friction drive plate because the wheel will slip and the rubber may deteriorate.

1. Disconnect the wire from the spark plug and make sure that the wire does not contact the spark plug (Fig. 16).
2. Drain gasoline from the fuel tank. Refer to *Emptying the Fuel Tank* on page 24.
3. Tip the snowthrower forward onto the auger/impeller housing and block it so that it cannot fall.
4. Remove the four screws that secure the bottom cover and remove the cover (Fig. 23).
5. Lightly lubricate the snowthrower with light oil as shown in Figure 29.

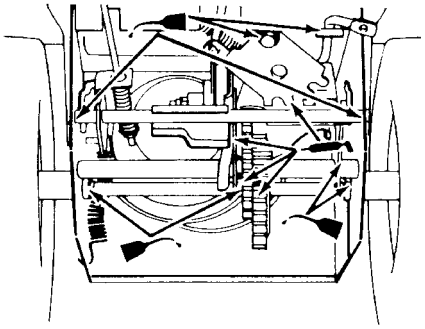

Figure 29

IMPORTANT: Do not excessively oil the snowthrower; extra oil may enter the traction drive and cause the traction drive belt to slip.

6. Grease the snowthrower as shown in Figure 29.
7. Wipe up any excess oil or grease.
8. Install the bottom cover with the four screws.
9. Return the snowthrower to its upright position.

Replacing the Spark Plug

Use a *Champion RJ-19LM* spark plug or equivalent. Since the air gap between the center and the side electrodes of the spark plug increases gradually during normal engine operation, install a new plug after every 100 operating hours.

1. Clean the area around the spark plug so that foreign matter does not fall into cylinder when removing the spark plug.
2. Disconnect the wire from of the spark plug (Fig. 16) and remove the plug from the cylinder head.

IMPORTANT: Replace a cracked, fouled, or dirty spark plug. Do not sandblast, scrape, or clean the electrodes because grit may eventually release from the plug and fall into the cylinder and cause engine damage.

3. Set the air gap between the spark plug electrodes at 0.030 inch (0.76 mm) (Fig. 30).

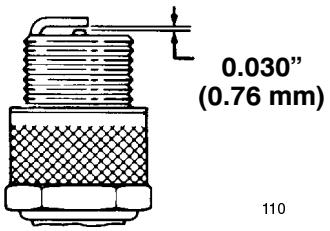

Figure 30

4. Install the spark plug in the cylinder head.
5. Torque the spark plug to 15 ft-lb (20.4 N·m).
6. Connect the wire to the spark plug.

Emptying the Fuel Tank

1. Disconnect the wire from the spark plug (Fig. 16).
2. Close the fuel shutoff valve (Fig. 18).

DANGER

POTENTIAL HAZARD
- **Gasoline is highly flammable.**

WHAT CAN HAPPEN
- **Gasoline can ignite and cause serious personal injury.**

HOW TO AVOID THE HAZARD
- **Drain gasoline outdoors.**
- **Drain gasoline from a cold engine only.**
- **Wipe up any gasoline that may have spilled.**
- **Do not drain gasoline near any open flame or where gasoline fumes may be ignited by a spark.**
- ***Do not smoke* a cigar, a cigarette, or a pipe when handling gasoline.**

3. Place a clean drain pan under the fuel shutoff valve.
4. Loosen the hose clamp that secures the fuel line to the valve and slide the line off the valve (Fig. 18).
5. Open the fuel shutoff valve by rotating it counterclockwise to allow the fuel to flow into the drain pan.

6. Install the fuel line and secure it with a hose clamp.
7. Connect the wire to the spark plug.
8. Start the snowthrower and run the engine until it stops.

Troubleshooting

Toro designed and built your snowthrower for trouble-free operation. Check the following components and items carefully, and refer to *Maintenance* on page 18 for more information. If a problem continues, see your Authorized Service Dealer.

PROBLEM	POSSIBLE CAUSES	CORRECTIVE ACTION
Electric starter does not crank (electric start models only)	1. The power cord is disconnected at the outlet or the snowthrower.	1. Connect the power cord to the outlet and/or the snowthrower.
	2. The power cord is worn, corroded, or damaged.	2. Replace the power cord.
	3. The power outlet is not energized.	3. Have a qualified electrician energize the power outlet.
Engine does not start or starts hard	1. The key is not in the ignition or is in the *Off* position.	1. Insert the key into the ignition and push it into the *On* position.
	2. The choke is in the *Off* position and the primer has not been pressed.	2. Move the choke to the *On* position and press the primer three times.
	3. The fuel shutoff valve is not open.	3. Open the fuel shutoff valve by turning it counterclockwise.
	4. The throttle is not in the *Fast* position.	4. Move the throttle to the *Fast* position.
	5. The fuel tank is empty or the fuel system contains stale fuel.	5. Drain and/or fill the fuel tank with fresh gasoline (not more than 30 days old). If the problem persists, contact your Authorized Service Dealer.
	6. The spark plug wire is loose or disconnected.	6. Connect the wire to the spark plug.
	7. The spark plug is pitted, fouled, or the gap is incorrect.	7. Clean the spark plug and check and adjust the spark plug gap. Replace the spark plug if it is damaged.
	8. The fuel cap vent is restricted.	8. Remove the vent restriction or replace the fuel cap.
	9. The engine oil level in the engine crankcase is too low or too high.	9. Add or drain the oil level in the engine crankcase to the *Full* mark on the dipstick.
	10. The air temperature is above 40°F (4°C) and the heater box is on the snowthrower.	10. Remove the heater box if you operate the snowthrower when the air temperature is above 40°F (4°C).

PROBLEM	POSSIBLE CAUSES	CORRECTIVE ACTION
Engine runs rough	1. The choke is in the *On* position.	1. Move the choke to the *Off* position.
	2. The fuel shutoff valve is not completely open.	2. Open the fuel shutoff valve.
	3. The fuel tank is nearly empty or contains stale fuel.	3. Drain and fill the fuel tank with fresh gasoline (not more than 30 days old). If the problem persists, contact your Authorized Service Dealer.
	4. The spark plug wire is loose.	4. Connect the wire to the spark plug.
	5. The spark plug is pitted, fouled, or the gap is incorrect.	5. Clean the spark plug and check and adjust the spark plug gap. Replace the spark plug if it is damaged.
	6. The engine oil level in the engine crankcase is too low or too high.	6. Add or drain the oil level in the engine crankcase to the *Full* mark on the dipstick.
	7. The air temperature is above 40°F (4°C) and the heater box is on the snowthrower.	7. Remove the heater box if you operate the snowthrower when the air temperature is above 40°F (4°C).
Engine runs, but the snowthrower discharges snow poorly or not at all	1. The throttle is not in the *Fast* position when throwing snow.	1. Move the throttle to the *Fast* position when throwing snow.
	2. The snowthrower is moving too fast to clear the snow.	2. Shift the snowthrower into a lower gear.
	3. You are trying to remove too much snow per swath.	3. Reduce the amount of snow removed for per swath.
	4. The discharge chute is plugged.	4. Stop the engine, wait for all moving parts to stop, and use a stick to remove the snow from the discharge chute.
	5. You are trying to remove extremely heavy or wet snow.	5. Don't overload the snowthrower with extremely heavy or wet snow.
	6. The auger/impeller drive belt is loose or is off the pulley.	6. Install and/or adjust the auger/impeller drive belt.
	7. The auger/impeller drive belt is worn or broken.	7. Replace the auger/impeller drive belt.
Snowthrower does not properly clear the snow off the surface	1. The tire pressure is low.	1. Check the pressure in the tires and adjust it if necessary.
	2. The skids and/or the scraper is not properly adjusted.	2. Adjust the skids and the scraper.

PROBLEM	POSSIBLE CAUSES	CORRECTIVE ACTION
Snowthrower tends to “ride up” on the snow	1. The snow on the surface to be cleared is compacted down. 2. The snowthrower is moving too fast to clear the snow. 3. The wheels are not in the rear position (Power Shift models only).	1. Throw the snow off the surface before it becomes compacted. 2. Shift the snowthrower into a lower gear. 3. Move the wheels to the rear Power Shift position.
Auger/impeller doesn’t stop properly	1. The auger/impeller drive belt is too tight.	1. Adjust the auger/impeller drive belt. If the problem persists, contact your Authorized Service Dealer.
Speed selector shifts properly but the snowthrower does not drive in forward or reverse speeds	1. The traction drive belt is loose. 2. The traction drive belt is worn or broken.	1. Adjust the traction drive belt. 2. Replace the traction drive belt.
Snowthrower runs slow or does not allow you to shift into the No. 5 speed	1. The speed selector linkage is improperly adjusted.	1. Adjust the speed selector linkage.
The controls cannot move	1. There is frozen snow and ice on the controls	1. **Do not attempt to force or operate the controls.** Allow the controls to thaw out before operating.

Storage

WARNING

POTENTIAL HAZARD
- **Gasoline fumes are highly flammable, explosive, and dangerous if inhaled.**

WHAT CAN HAPPEN
- **If the product is stored in an area with an open flame, the gasoline fumes may be ignited, causing an explosion.**

HOW TO AVOID THE HAZARD
- **Do not store the snowthrower in a house (living area), basement, or any other area where ignition sources may be present, such as hot water and space heaters, clothes dryers, furnaces, and other like appliances.**

Preparing the Fuel System

1. Add stabilizer/conditioner to the fuel in the fuel tank as directed.
2. Run the engine for ten minutes to distribute the conditioned fuel through the fuel system.
3. Stop the engine, allow it to cool, and drain the fuel tank, or run the engine until it stops.
4. Start the engine and run it until it stops.
5. Choke or prime the engine, start it a third time, and run the engine until it will not start.
6. Dispose of unused fuel properly. Recycle it according to local codes, or use it in your automobile.

Note: Do not store stabilized gasoline for more than 90 days.

Preparing the Engine

1. Remove the spark plug from the cylinder head.
2. Pour two teaspoons of oil into the spark plug hole.
3. Install the spark plug, but do not connect the wire to the plug.
4. Pull the recoil starter slowly to distribute oil on the inside of the cylinder.
5. Change the engine oil. Refer to *Changing the Engine Oil* on page 19.

Preparing the Snowthrower

1. Lubricate the snowthrower. Refer to *Lubricating the Snowthrower* on page 24.
2. Clean the snowthrower.
3. Touch up chipped surfaces with paint available from an Authorized Service Dealer. Sand affected areas before painting, and use a rust preventative to prevent the metal parts from rusting.
4. Tighten all screws and nuts. Repair or replace any damaged parts.
5. Cover the snowthrower and store it in a clean, dry place out of the reach of children. Allow the engine to cool before storing it in any enclosure.

Accessories

You can obtain the following snowthrower accessories from your Authorized Service Dealer:

- 230 V AC Electric Starter Kit
- Tire Chain Kit
- Drift Breaker Kit
- Snow Shield Kit