Form No. 3325-322

Ultra 225 Blower/Vacuum

Model No. 51598—210000001 and Up

Parts Catalog

Ordering Replacement Parts

To order replacement parts, please supply: the part number, the quantity, and the description of each part desired.

Understanding Reference Numbers

Each identified part in an illustration has a reference number. The reference number for a part also appears in the parts list, along with other information about the part.

This catalog uses two special reference number formats, one to indicate parts in a service assembly and another to indicate the quantity of a given part in an illustration.

Service Assembly Reference Numbers

Parts in service assemblies have reference numbers in the form **a:b.** The **a** represents the reference number of the entire service assembly and the **b** represents a sequential number unique to each part within the service assembly.

For example, a wheel assembly might be identified by reference number **6**, the tire by **6:1**, the valve by **6:2**, and the wheel by **6:3**. When you order the assembly identified by reference number 6, you receive all parts identified by reference numbers 6:1, 6:2, and 6:3. However, you may also order any part individually.

Reference numbers of this type appear in illustrations and in part lists.

Reference Numbers Indicating Quantity

In an illustration, if a reference number indicates more than one part, the reference number has the form **nX y.** The **n** represents the quantity of the part, the **X** is the multiplication symbol, and the **y** represents the reference number.

For example, in an illustration, the reference number **2X 37** means that two of the parts identified by reference number 37 are indicated.

© The TORO Company — 2002
All Rights Reserved

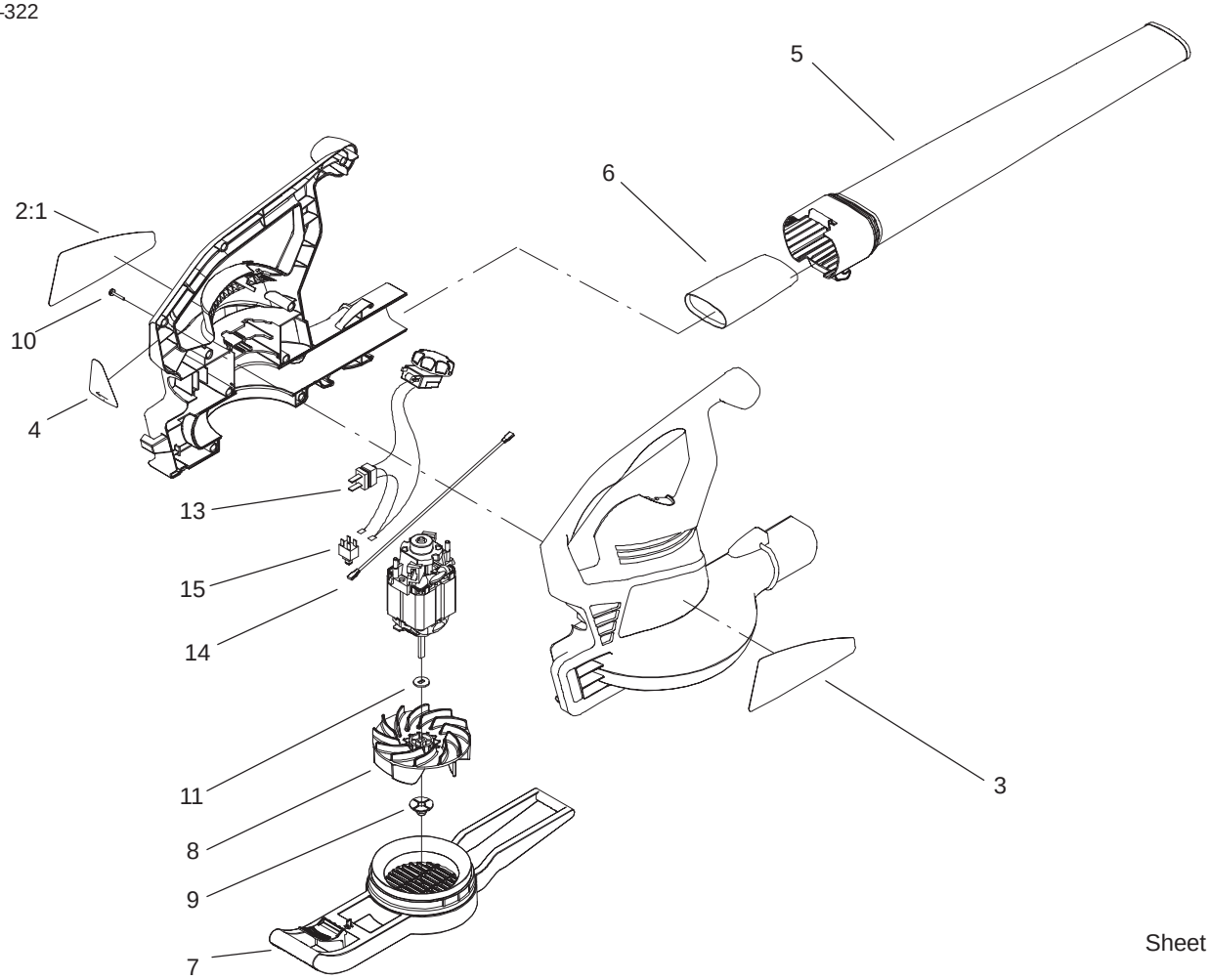

Sheet No.: 2

Blower/Vacuum Assembly

Ref. No.	Part No.	Qty.	Description
☆2		1	Decal–Serial, Ultrablower
2:1	100–9087	1	Label Stock–Serial
3	100–9089	1	Decal–Ultrablower
4	100–9088	1	Decal–Lock, Cord
5	100–9072	1	Tube–Blower
6	100–9069	1	Tube–Insert
7	100–9067	1	Cover–Inlet
8	100–9076	1	Impeller–Magnesium
9	73–5380	1	Nut–Hex
10	94–4496	10	Screw–PPH
11	93–0585	1	Washer
13	104–3820	1	Wire Harness ASM
15	100–9083	1	Switch–Interlock

Ref. No.	Part No.	Qty.	Description

☆ Not serviced separately

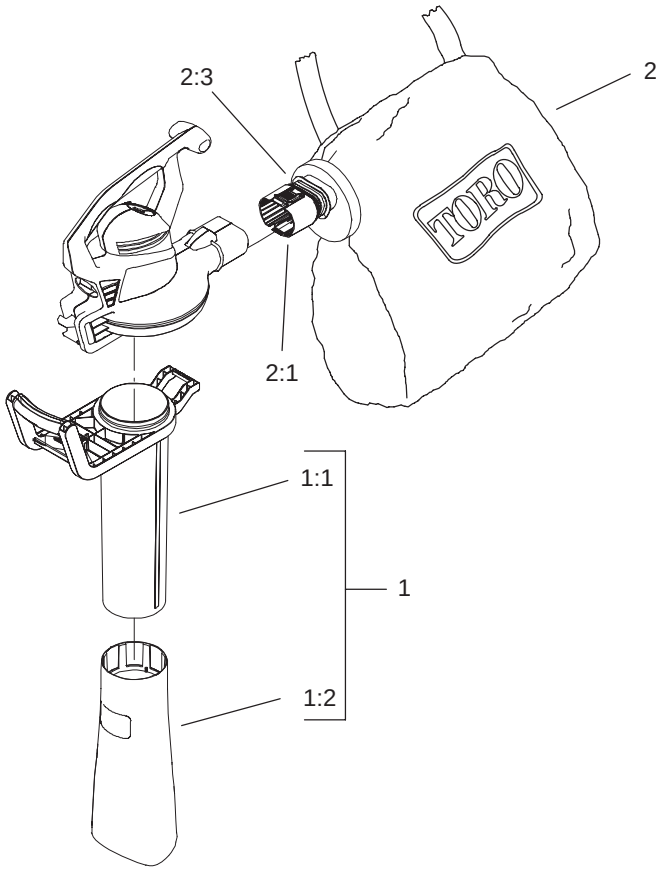

Sheet No.:3

Vacuum Tube and Bag Assembly

Ref. No.	Part No.	Qty.	Description
☆1		1	Vac Tube ASM
1:1	100–9066	1	Tube–Vac, Upper
1:2	100–9074	1	Tube–Vac, Lower
2	104–3809	1	Bag ASM
2:1	100–9065	1	Collar–Bag
2:3	100–9064	1	Tie–Cable

Ref. No.	Part No.	Qty.	Description

☆ Not serviced separately


TORO®