Form No. 3322-817 Rev B

TORO®

924, 1028, and 1332 Power Shift®

Snowthrower

Model No. 38079—200000001 and Up
Model No. 38087—200000001 and Up
Model No. 38559—200000001 and Up

Operator's Manual

CE

International English (GB)

Contents

	Page
Introduction	2
Safety	3
General Snowthrower Safety	3
Toro Snowthrower Safety	4
Sound Pressure Level	5
Sound Power Level	5
Vibration Level	5
Symbol Glossary	6
Assembly	9
Loose Parts	9
Installing the Auger/Impeller Housing	10
Installing the Shift Rod	11
Installing the Discharge Chute	11
Installing the Chute Control Gear	11
Installing the Skids	12
Before Starting	13
Filling the Engine Crankcase with Oil	13
Filling the Fuel Tank with Gasoline	13
Checking the Tire Pressure	14
Operation	14
Controls	14
Removing the Heater Box	15
Installing the Heater Box	16
Starting the Engine	16
Stopping the Engine	16
Operating the Power Shift Feature	16
Freewheeling or Self-propelled Drive	17
Adjusting the Headlight	17
Snowthrowing Tips	18
Maintenance	19
Recommended Maintenance Schedule	19
Checking the Engine Oil Level	20
Changing the Engine Oil	20
Checking the Auger Gear Box Oil	21
Adjusting the Traction Drive Belt	21
Adjusting the Auger/Impeller Drive Belt	21
Replacing the Drive Belts	23
Adjusting the Skids and the Scraper	23
Adjusting the Drive Chain	24
Lubricating the Snowthrower	25
Replacing the Spark Plug	25
Emptying the Fuel Tank	25
Troubleshooting	26
Storage	28
Preparing the Fuel System	28
Preparing the Engine	28
Preparing the Snowthrower	29
Accessories	29

Introduction

Thank you for choosing a Toro product. We want you to be completely satisfied with your new purchase.

Read this manual carefully to learn how to operate and maintain your product properly. The information in this manual can help you and others avoid injury and product damage. Although Toro designs and produces safe products, you are responsible for operating the product properly and safely.

Whenever you contact your Authorized Service Dealer or the factory for help with service, genuine Toro parts, or additional information, have the model number and the serial number of your product handy. You will find the model number and serial number decal on the product as illustrated in Figure 1.

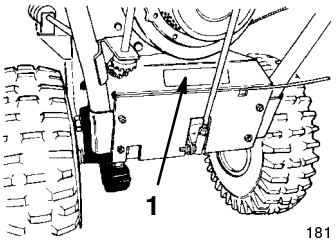

Figure 1

1. Model and serial number decal

For your convenience, write the product model number and serial number in the space below:

Model No. _____

Serial No. _____

This manual identifies potential hazards and has special safety messages that help you and others avoid personal injury and even death. DANGER, WARNING, and CAUTION are words used to identify the level of hazard.

DANGER signals an extreme hazard that will cause serious injury or death if you do not follow the recommended precautions.

WARNING signals a hazard that may cause serious injury or death if you do not follow the recommended precautions.

©2000 **The Toro Company**

8111 Lyndale Ave. South
Bloomington, MN 55420-1196

All Rights Reserved
Printed in the USA

CAUTION signals a hazard that may cause minor or moderate injury if you do not follow the recommended precautions.

This manual uses two other words to highlight information. **Important** calls attention to special mechanical information and **Note** emphasizes general information worthy of special attention.

Safety

This snowthrower meets or exceeds the ISO standard 8437 in effect at the time of production. However, improper use or maintenance by the operator or owner can result in injury. To reduce the potential for injury, comply with these safety instructions.

The snowthrower is designed and tested to offer reasonably safe service; however, **failure to comply with the following instructions may result in personal injury.**

To ensure maximum safety, best performance, and to gain knowledge of the product, it is essential that you and any other operator of the snowthrower read and understand the contents of this manual before the motor is ever started. Pay particular attention to the safety alert symbol ⚠ which means CAUTION, WARNING, OR DANGER — "personal safety instruction." Read and understand the instruction because it has to do with safety. Failure to comply with instruction may result in personal injury.

General Snowthrower Safety

The following instructions have been adapted from the ANSI/OPEI standard B71.3 and ISO standard 8437 in effect at the time of production. Information or terminology specific to Toro snowthrowers is enclosed in parenthesis.

Training

- Read the operator's manual carefully. Be thoroughly familiar with the controls and the proper use of the equipment. Know how to stop the unit and disengage the controls quickly.
- Never allow children to operate the equipment. Never allow adults to operate the equipment without proper instruction.
- Keep the area of operation clear of all persons, particularly small children and pets.
- Exercise caution to avoid slipping or falling, especially when operating in reverse.

Preparation

- Thoroughly inspect the area where the equipment is to be used and remove all doormats, sleds, boards, wires, and other foreign objects.
- Disengage all clutches and shift into neutral before starting the engine.
- Do not operate the equipment without wearing adequate winter garments. Wear footwear that will improve footing on slippery surfaces.
- Handle fuel with care; it is highly flammable.
  - Use an approved fuel container.
  - Never add fuel to a running or hot engine.
  - Fill fuel tank outdoors with extreme care. Never fill fuel tank indoors.
  - Replace gasoline caps securely and wipe up spilled fuel.
- Use only the power cord supplied with the snowthrower and a receptacle appropriate for use with the cord for electric starting motors.
- Adjust the auger housing height to clear gravel or crushed rock surface. (This is not necessary on single-stage snowthrowers.)
- Never attempt to make any adjustments while the engine is running, except where specifically recommended by Toro.
- Let engine and machine adjust to outdoor temperatures before starting to clear snow.
- The operation of any powered machine can result in foreign objects being thrown into the eyes. Always wear safety glasses or eye shields during operation or while performing an adjustment or repair.

Operation

- Do not put hands or feet near or under rotating parts. Keep clear of the discharge opening at all times.
- Exercise extreme caution when operating on or crossing gravel drives, walks, or roads. Stay alert for hidden hazards or traffic.
- After striking a foreign object, stop the engine, remove the wire from the spark plug, thoroughly inspect the snowthrower for any damage, and repair the damage before restarting and operating the snowthrower.
- If the unit should start to vibrate abnormally, stop the engine and check immediately for the cause. Vibration is generally a warning of trouble.

- Stop the engine whenever you leave the operating position, before unclogging the auger/impeller housing or discharge chute, and when making any repairs, adjustments, or inspections.
- When cleaning, repairing, or inspecting, make certain that the auger/impeller or rotor blades and all moving parts have stopped. Disconnect the spark-plug wire, and keep the wire away from the plug to prevent someone from accidentally starting the engine.
- Do not run the engine indoors, except when starting it and for moving the snowthrower in or out of the building. Open the outside doors; exhaust fumes are dangerous.
- Do not clear snow across the face of slopes. Exercise extreme caution when changing direction on slopes. Do not attempt to clear steep slopes.
- Never operate the snowthrower without proper guards, plates, or other safety protective devices in place.
- Never operate the snowthrower near glass enclosures, automobiles, window wells, drop-offs, etc. without proper adjustment of the snow discharge angle. Keep children and pets away.
- Do not overload the machine capacity by attempting to clear snow at too fast a rate.
- Never operate the machine at high transport speeds on slippery surfaces. Look behind and use care when moving in reverse.
- Never direct discharge at bystanders or allow anyone in front of the unit.
- Disengage power to the auger/impeller or rotor blades when snowthrower is transported or not in use.
- Use only attachments and accessories approved by Toro, such as wheel weights, counterweights, cabs, etc. (Contact your Authorized Service Dealer for accessories available for your snowthrower.)
- Never operate the snowthrower without good visibility or light. Always be sure of your footing, and keep a firm hold on the handles. Walk; never run.

Maintenance and storage

- Check all fasteners at frequent intervals for proper tightness to be sure that the equipment is in safe working condition.
- Never store the machine with fuel in the fuel tank inside a building where ignition sources are present, such as hot water and space heaters, clothes dryers, etc. Allow the engine to cool before storing in any enclosure.
- Always refer to this operator's manual for important details if the snowthrower is to be stored for an extended period.
- Maintain or replace safety and instruction labels when necessary.
- Run the machine a few minutes after throwing snow to prevent freeze-up of the auger/impeller or rotor blades. With the engine running, stay in the operating position and disengage the auger/impeller or rotor blades, shift the traction into the neutral position, and pull the recoil starter handle several times to prevent it from freezing up. (Pulling on the recoil starter rope produces a loud, clattering sound. This does not harm the engine or the starter.)

Toro Snowthrower Safety

The following list contains safety information specific to Toro products or other safety information that you must know that is not included in the ANSI or ISO standards.

- **The rotating auger/impeller or rotor blades can cut off or injure fingers or hands.** Stay behind the handles and away from the discharge opening while operating the snowthrower. **Keep your face, hands, feet, and any other part of your body or clothing away from concealed, moving, or rotating parts.**
- Before adjusting, cleaning, repairing, and inspecting the snowthrower, and before unclogging the discharge chute, **stop the engine, remove the key, and wait for all moving parts to stop**. Also, disconnect the wire from the spark plug and keep it away from the plug to prevent someone from accidentally starting the engine.
- Use a stick, **not your hands**, to remove obstructions from the discharge chute.
- **Before** leaving the operator's position behind the handles, stop the engine, remove the key, and wait for all moving parts to stop.
- Do not wear loose-fitting clothing that could get caught in moving parts.
- If a shield, safety device, or decal is damaged, illegible, or lost, repair or replace it before beginning operation. Also, tighten any loose fasteners.
- **Do not** smoke while handling gasoline.
- For two-stage snowthrowers, use the lower gear and, for Power Shift snowthrowers, the rear wheel position when operating on slopes.
- **Do not** use the snowthrower on a roof.
- Do not touch the engine while it is running or soon after it has stopped because the engine will be hot enough to cause a burn. Do not add oil or check the oil level in the crankcase when the engine is running.
- Perform only those maintenance instructions described in this manual. Before performing any maintenance, service, or adjustment, stop the engine, remove the key and disconnect the wire from the spark plug, keeping it

away from the plug to prevent someone from accidentally starting the engine. If major repairs are ever needed, contact your Authorized Service Dealer.

- Do not change the governor settings on the engine.
- When storing the snowthrower for more than 30 days, drain the gasoline from the fuel tank to prevent a potential hazard. Store gasoline in an approved fuel container. Remove the key from the ignition switch before storing the snowthrower.
- To ensure the best performance and safety, purchase only genuine Toro replacement parts and accessories.

Sound Pressure Level

This unit has a sound pressure at the operator's ear of 91 dB(A), based on measurements of identical machines per Directive 81/1051/EEC.

Sound Power Level

This unit has a sound power level of 106 LwA, based on measurements of identical machines per Directive 79/113/EEC.

Vibration Level

This unit has a maximum hand-arm vibration level of 13.8 m/s^2 (model 38079) or 16.2 m/s^2 (models 38087 and 38559), based on measurements of identical machines per EN 1033.

Before Operating

Read and understand the contents of this manual before operating the snowthrower. Become familiar with all controls and know how to stop the engine quickly.

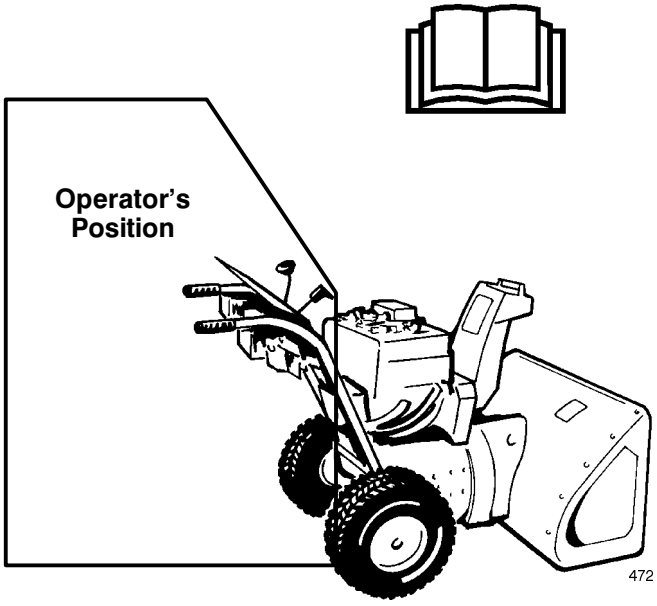

Caution: Improper use may result in loss of fingers, hands, or feet.

There is a high-speed impeller within two inches of the opening.

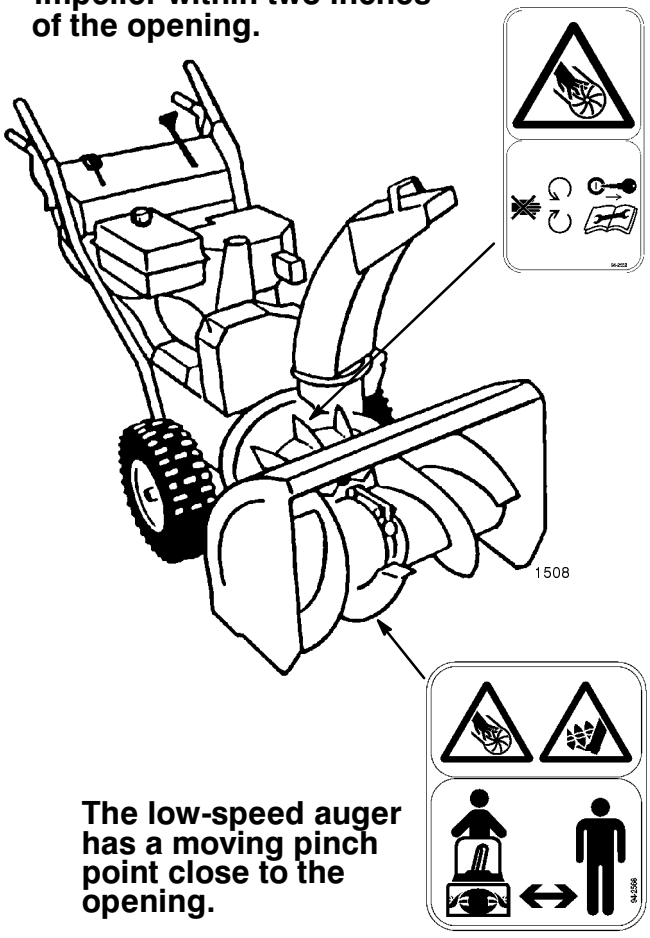

The low-speed auger has a moving pinch point close to the opening.

Symbol Glossary

Safety alert triangle – symbol within triangle indicates a hazard



Safety alert symbol



Read operator's manual



Consult technical manual for proper service procedures



Shut off engine and remove key before performing maintenance or repair work



Shut off engine and remove key before leaving operator position – single stage snowthrower



Shut off engine and remove key before leaving operator position – two stage snowthrower



Severing of fingers or hand – impeller blade



Do not open or remove safety shields while engine is running

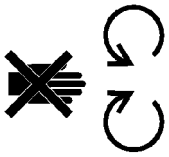

Stay a safe distance from the machine

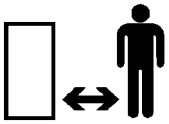

Stay a safe distance from the machine – single stage snowthrower



Stay a safe distance from the machine – two stage snowthrower

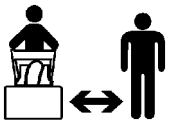

Thrown or flying objects – Whole body exposure

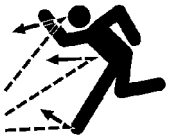

Electrical shock – electrocution



Cutting or entanglement of foot – rotating auger



Electric start

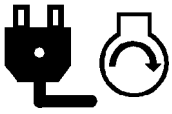

Hot surfaces – burns to fingers or hands



Caustic liquids – chemical burns to fingers or hands



Do not tip battery

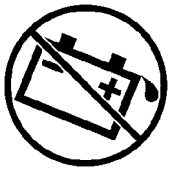

Keep dry



Machine travel direction – forward



Machine travel direction – rearward



On/start



Off/stop

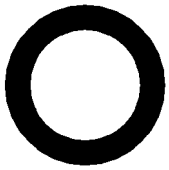

Machine loss of control – uphill slope



Machine loss of control – downhill slope



Traction drive



Snowthrower collector auger

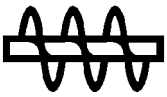

Engage

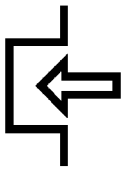

Disengage

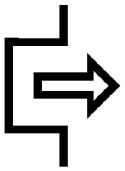

Choke

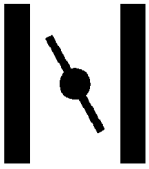

Engine speed (Throttle)



Fast



Slow



Decreasing/Increasing



Engine start

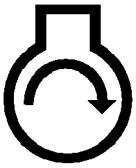

Engine stop



Snowthrower chute direction



Primer (start aid)



Primer operation

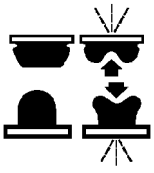

Neutral



Snowthrower collector auger/impeller



Lock



Unlock



Lever operation



Lever operation



Unleaded fuel



Cutting of fingers or hand



Throttle operation

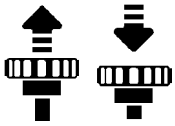

Cutting of foot



PowerShift operation

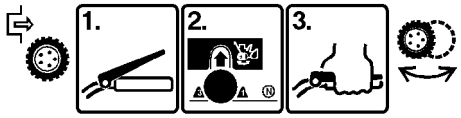

Assembly

Note: Determine the left and right sides of your snowthrower by standing in the normal operating position.

Loose Parts

Part	Qty	Use
Flange head cap screws—3/4 inch (1.9 cm)	6	Mounting the auger/impeller housing
Lower belt cover	1	
Flange head cap screws—1/2 inch (1.3 cm)	5	
Cable cover	1	
Shift rod	1	Installing the shift rod
Locknuts	2	
Discharge chute	1	Installing the discharge chute
Worm gear	1	Installing the chute control gear
Gear bracket	1	
Carriage bolt—1 inch (2.5 cm)	1	
Flat washer	1	
Locknut	1	
Skids	2	Installing the skids
Flange head cap screws—3/4 inch (1.9 cm)	2	
Flat washers	2	
Locknuts	2	
Key	1	Starting and stopping the engine

Installing the Auger/Impeller Housing

1. Remove the two flange head cap screws that secure the idler pulley assembly to the engine frame, and remove the idler pulley assembly (Fig. 2).

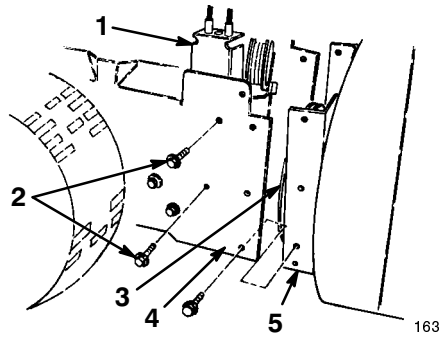

Figure 2

1. Idler pulley assembly
2. Mounting screws
3. Impeller pulley
4. Engine frame
5. Auger housing

IMPORTANT: Remove the idler pulley assembly at this point to prevent damaging it.

2. Align the auger/impeller housing and the engine frame mounting holes (Fig. 2).
3. Route the impeller belt around the impeller pulley (Fig. 2).
4. Secure the auger/impeller housing to the engine frame with six 3/4-inch (1.9 cm) flange head cap screws.
5. Install the idler pulley assembly, aligning the idler pulleys with the belts (Figs. 2 and 30).
6. Tip the snowthrower up on the front edge of the auger/impeller housing, and block it in place.
7. Move the wheels to the rear position.
8. Push the latch rod to the release the axle (Fig. 3).

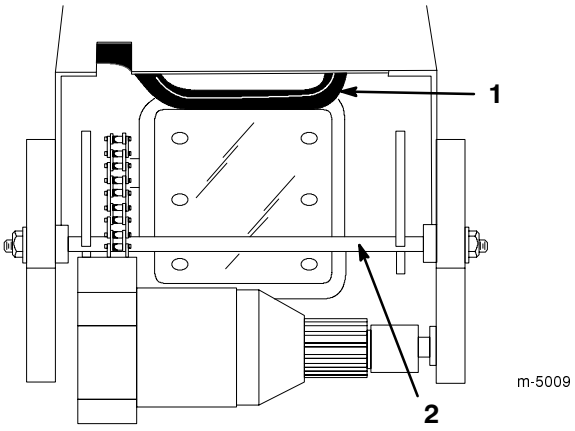

Figure 3

1. Latch rod
2. Axle

9. Pull up on the axle while holding in the latch rod (Fig. 3).
10. Continue pulling the axle forward until the latch rod springs into the locked position (Fig. 3).
11. Install the lower belt cover on the underside of the auger/impeller housing and the engine frame with two 1/2-inch (1 mm) flange head cap screws (Fig. 4).

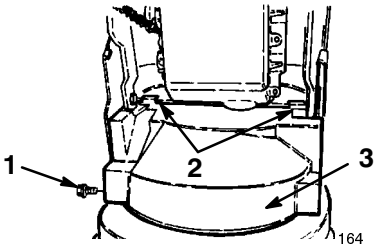

Figure 4

1. Flange head cap screw
2. Mounting tabs
3. Lower belt cover (shown from bottom)

Note: Position the belt cover mounting tabs to the rear of the engine frame member.

12. Lower the snowthrower onto its wheels.
13. Check the adjustment of the impeller cable; refer to steps 3 through 7 of *Adjusting the Auger/Impeller Drive Belt* on page 21.
14. Mount the upper belt cover to the engine frame with three 1/2-inch (1.3 cm) flange head cap screws (Fig. 4).

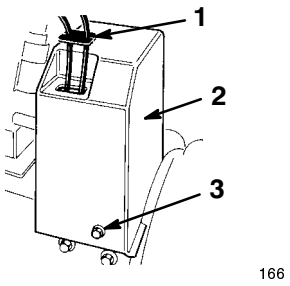

Figure 5

1. Cable cover
2. Upper belt cover
3. Flange head cap screw

15. Slide the cable cover onto the cables and into the hole in the belt cover (Fig. 5).

Installing the Shift Rod

1. Insert the upper ball joint stud through the front of the shift bracket and secure it with a locknut (Fig. 6).

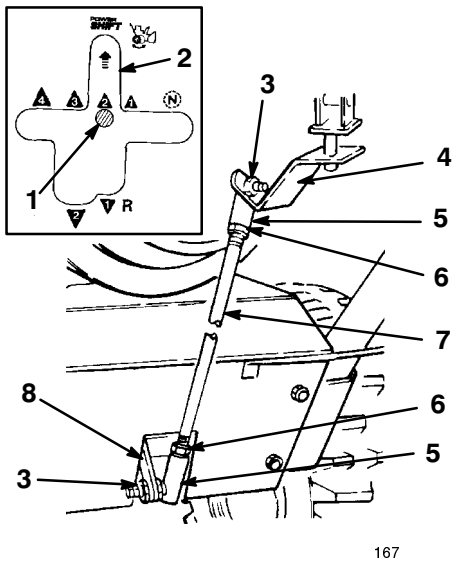

Figure 6

1. Gear shift lever
2. Power Shift slot
3. Locknut
4. Shift bracket
5. Ball joint
6. Jam nut
7. Shift rod
8. Transmission lever

Note: Position the shift rod with the bend rearward.

2. Insert the lower ball joint stud through the right side of the transmission lever and secure it with a locknut (Fig. 6).

3. Shift the snowthrower into second gear and check the shift rod alignment with the Power Shift slot.

Note: If the gear shift lever does not align with the Power Shift slot in the control panel (see inset in Fig. 6), adjust the shift rod length as follows:

4. Disconnect the ball joint from the transmission lever and loosen the jam nut (Fig. 6).

5. Rotate the ball joint up or down until the gear shift lever aligns with the Power Shift slot (Fig. 6).

6. Install the ball joint to the transmission lever and tighten the jam nut (Fig. 6).

Installing the Discharge Chute

1. Apply a light coat of low-temperature grease to the chute ring (Fig. 7).

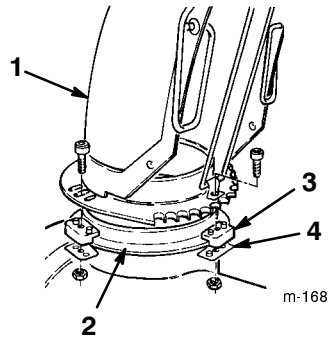

Figure 7

1. Discharge chute
2. Chute ring
3. Plastic chute retainer
4. Chute retainer plate

2. Set the discharge chute (open side forward) onto the discharge opening so that the plastic chute retainers are on the chute ring (Fig. 7).

Note: Make sure that the chute retainer guide pins are in the holes in the chute gear

3. Tighten the machine screw and the locknut on the left side to position the plastic chute retainer against the chute retainer plate and to secure the discharge chute to the chute ring (Fig. 7).

4. Push the other chute retainers toward the discharge chute (slotted) and tighten the screws (Fig. 7).

5. Make sure that the chute rotates freely on the chute ring. If the chute binds, move the right-hand retainer outward (Fig. 7).

Installing the Chute Control Gear

1. Insert the one-inch (2.5 cm) carriage bolt into the gear bracket mounting hole (Fig. 8).

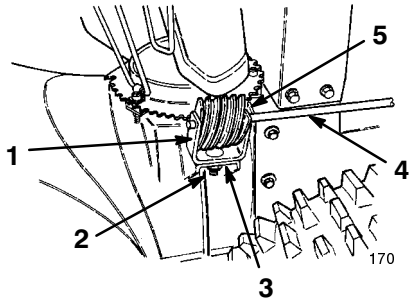

Figure 8

1. Gear bracket
2. Carriage bolt, flat washer, and locknut
3. Mounting flange
4. Chute gear rod
5. Worm gear

2. Position the worm gear into the bracket, align the holes, and insert the chute gear rod through the bracket and the gear (Fig. 8).
3. Loosely mount the worm gear and the bracket to the mounting flange with a carriage bolt, a flat washer, and a locknut (Fig. 8).
4. Slide the worm gear into the teeth of the chute gear and tighten the locknut (Fig. 8).
5. Check the operation of the chute control.
6. Move the gear slightly outward if it binds; inward if the gear is too loose.

Installing the Skids

1. Check the air pressure in the tires; refer to *Checking the Tire Pressure* on page 14.
2. Move the snowthrower onto a flat surface and make sure that the scraper (Fig. 9) is parallel to the ground. If it is not, adjust the scraper; refer to *Adjusting the Skids and the Scraper* on page 23.

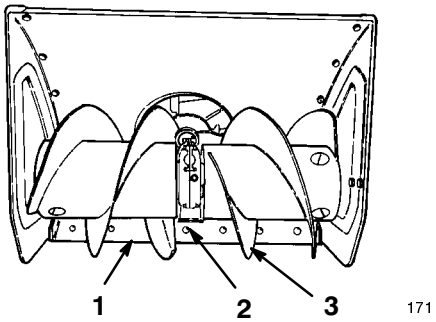

Figure 9

1. Scraper
2. Carriage bolt
3. Auger blade

3. Remove the two flange bolts and the two flat washers that secure the ends of the scraper to the side plates (Fig. 10).

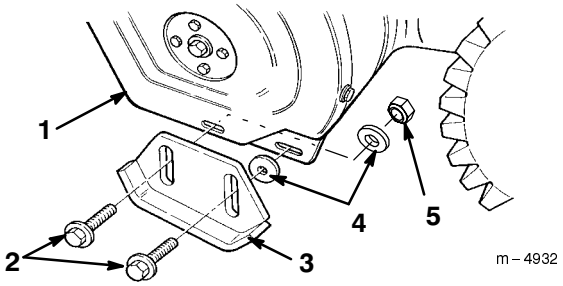

Figure 10

1. Side plate
2. Flange bolts
3. Skid (2)
4. Flat washers
5. Locknut

4. Insert a flange bolt through the rear slot in each skid.
5. Insert a washer **between each skid and the side plate** (Fig. 10). Do not tighten the bolts.
6. Install a flange bolt through the front slot of each skid and the side plate.
7. Insert a washer and a locknut **behind (on the inside of) the side plate** (Fig. 10). Do not tighten the bolts.

Note: The following steps describe how to adjust the skids for paved surfaces. For gravel or crushed rock surfaces, refer to *Adjusting the Skids and the Scraper* on page 23.

8. Manually move the wheels to the **rear** Power Shift position by lifting up on the handles and moving the shift control fully forward (Fig. 11).

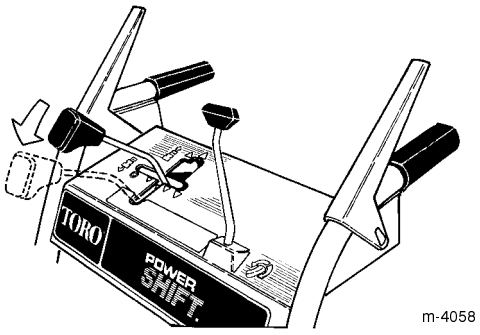

Figure 11

9. Support the **scraper** 1/8 inch (3 mm) above a level surface if you use the snowthrower on **smooth pavement**.

Note: The scraper should be higher than 1/8 inch (3 mm) above the pavement if the pavement surfaces are cracked, rough, or uneven.

10. Move the skids down to sit flat on the ground and tighten the four flange bolts that secure both skids to the side plates.

Before Starting

Filling the Engine Crankcase with Oil

The engine comes from the factory with only a few ounces of oil in the crankcase. Before starting the engine, add oil. The crankcase of models 38079 and 38087 hold 26 ounces (0.77 liters) of oil, and the crankcase of model 38559 holds 28 ounces (0.83 liters) of oil. However, because there is some oil in the crankcase, do not add the full amount at one time. Gradually add the oil according to the following procedure:

1. Move the snowthrower to a level surface to ensure an accurate oil level reading.

2. Clean the area around the dipstick (Fig. 12).

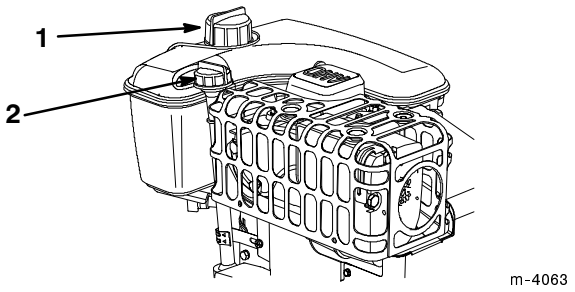

Figure 12

1. Fuel tank cap 2. Dipstick and filler hole

3. Remove the dipstick from the crankcase (Fig. 12).

4. Slowly pour 3/4 of the total capacity of oil into the crankcase.

Use only a high-quality, SAE 5W–30 or SAE 10 weight detergent oil that has the American Petroleum Institute (API) “service classification”—SF, SG, SH, or SJ. For extremely cold conditions (below 0°F or –18°C), use 0W–30 weight detergent oil that has the American Petroleum Institute (API) “service classification”—SF, SG, SH, or SJ.

5. Wipe the dipstick clean with a clean cloth.

6. Fully install the dipstick.

Note: To ensure an accurate oil level reading, you must fully install the dipstick.

7. Remove the dipstick.

8. Read the oil level on the dipstick.

9. If the oil level is below the *Full* mark, slowly add oil, checking the level frequently (steps 5 through 8), until the dipstick reads *Full*.

IMPORTANT: Do not overfill the crankcase and run the engine; engine damage will result. Drain the excess oil until the oil level on the dipstick reads *Full*.

10. Install the dipstick.

Filling the Fuel Tank with Gasoline

Use clean, fresh lead-free gasoline (including oxygenated or reformulated gasoline) with an octane rating of 87 or higher. To ensure freshness, purchase only the quantity of gasoline that you expect to use in 30 days. Using unleaded gasoline results in fewer combustion chamber deposits and longer spark plug life.

IMPORTANT: Do not use methanol, gasoline containing methanol, gasohol containing more than 10% ethanol, premium gasoline, or white gas. Using these fuels can damage the engine’s fuel system.

DANGER

POTENTIAL HAZARD
- **In certain conditions gasoline is extremely flammable and highly explosive.**

WHAT CAN HAPPEN
- **A fire or explosion from gasoline can burn you and others and cause property damage.**

HOW TO AVOID THE HAZARD
- **Fill the fuel tank outdoors, in an open area, and when the engine is cold. Wipe up any gasoline that spills.**
- **Do not fill the fuel tank completely full. Add gasoline to the fuel tank until the level is 1/4 to 1/2 inch (6 to 13 mm) below the bottom of the filler neck. This empty space in the tank allows the gasoline to expand.**
- **Never smoke when handling gasoline, and stay away from an open flame or where a spark may ignite gasoline fumes.**
- **Store gasoline in an approved fuel container and keep it out of the reach of children.**
- **Never buy more than a 30-day supply of gasoline.**

DANGER

POTENTIAL HAZARD

- **When fueling, under certain circumstances, a static charge can develop, igniting the gasoline.**

WHAT CAN HAPPEN

- **A fire or explosion from gasoline can burn you and others and cause property damage.**

HOW TO AVOID THE HAZARD

- **Always place gasoline containers on the ground away from your vehicle before filling.**
- **Do not fill gasoline containers inside a vehicle or on a truck or trailer bed because interior carpets or plastic truck bed liners may insulate the container and slow the loss of any static charge.**
- **When practical, remove gas-powered equipment from the truck or trailer and refuel the equipment with its wheels on the ground.**
- **If this is not possible, then refuel such equipment on a truck or trailer from a portable container, rather than from a gasoline dispenser nozzle.**
- **If you must use a gasoline dispenser nozzle, keep the nozzle in contact with the rim of the fuel tank or container opening at all times until fueling is complete.**

Use a fuel stabilizer/conditioner regularly during operation and storage. A fuel stabilizer/conditioner cleans the engine during operation and prevents gum-like varnish deposits from forming in the engine during storage.

IMPORTANT: Do not use fuel additives except a fuel stabilizer during storage. Do not use fuel stabilizers with an alcohol base, such as ethanol, methanol, or isopropanol.

1. Clean the area around the fuel tank cap (Fig. 12).
2. Remove the cap from fuel tank.
3. Using unleaded, regular gasoline, fill the tank to within 1/4 to 1/2 inch (6 to 13 mm) from the top of the tank, not into the filler neck.

IMPORTANT: Do not fill the tank with gasoline into the filler neck. This space is for fuel expansion. Do not fill the fuel tank completely full.

4. Install the fuel tank cap.
5. Wipe up any spilled gasoline.

Checking the Tire Pressure

Check the pressure of the tires because they come overinflated from the factory. Reduce the pressure in both tires to between 7 and 15 psi (48 and 103 kPa) equally.

Operation

Controls

- **Speed Shift Control** (Fig. 13)—The control has a neutral position, four forward speeds, and two reverse speeds. It also controls the power shifting of the wheels. To select a speed, move the shift control to the desired position.

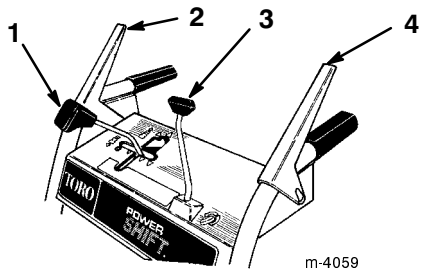

Figure 13

1. Speed shift control
2. Auger/impeller control lever
3. Discharge chute control
4. Traction drive control lever

Before shifting the gears into or out of reverse, or when using the Power Shift feature, release the traction drive control. You can use on-the-go shifting feature with any of the **forward** speeds without releasing the traction drive control lever.

- **Auger/Impeller Drive Control Lever** (Fig. 13)—To engage both the auger and impeller, press the lever against the right handgrip. To disengage, release the lever.
- **Traction Control Lever** (Fig. 13)—To engage the traction (wheel drive), press the lever against left handgrip. To stop traction, release the lever.
- **Discharge Chute Control** (Fig. 13)—Rotate the discharge chute control clockwise to move the discharge chute to the right and counterclockwise to move the chute to the left.
- **Auger/impeller Lock-Up**—When you press both the auger/impeller control lever and traction drive control lever, the traction control lever locks the auger/impeller control lever down. Release the traction control lever to release both levers.

- **Ignition Switch** (Fig. 14)—Insert the key before starting the engine with the recoil starter. To stop the engine, remove the key.

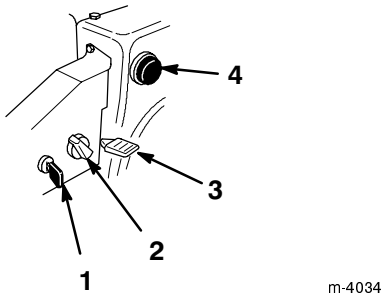

Figure 14

1. Ignition switch
2. Choke
3. Throttle
4. Primer

- **Choke** (Fig. 14)—Rotate the choke to the *Full* choke position to start a cold engine. As engine warms up, move choke gradually to the *Off* position.
- **Throttle** (Fig. 14)—Move the throttle upward to increase engine speed and downward to decrease engine speed.
- **Primer** (Fig. 14)—Press the primer to pump a small amount of gasoline into the engine to improve cold-weather starting.
- **Fuel Shutoff Valve** (Fig. 15)—The valve is located under fuel tank. Close the valve to stop the fuel flow from the fuel tank and open the valve to allow the fuel to flow to the carburetor. Close the valve when you are not using the snowthrower.

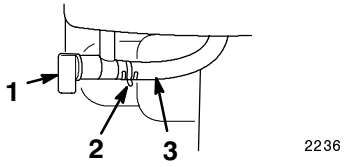

Figure 15

1. Fuel shutoff valve
2. Hose clamp
3. Fuel line

- **Chute Deflector Handle** (Fig. 16)—Move the deflector handle forward to move the snow stream down and rearward to move the snow stream up.

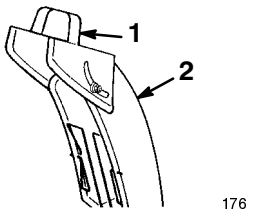

Figure 16

1. Deflector handle
2. Discharge chute

- **Recoil Starter** (Fig. 17)—Pull the recoil starter to start the engine.

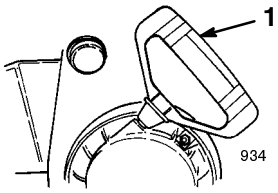

Figure 17

1. Recoil starter

Removing the Heater Box

If you operate the engine when the air temperature is above 40°F (4°C), remove the carburetor heater box (Fig. 18).

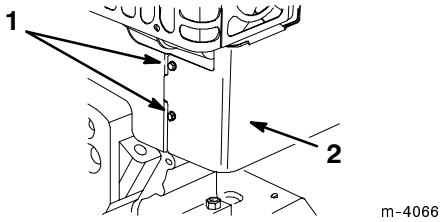

Figure 18

1. Phillips screws
2. Carburetor heater box

1. Disconnect the wire from the spark plug and make sure that the wire does not contact the plug (Fig. 18).
2. Remove the key from the ignition switch (Fig. 14).
3. Pull the choke knob off (Fig. 14).
4. Remove two Phillips screws that secure the carburetor heater box in place (Fig. 18).

Note: Install these fasteners in their holes for safe keeping.

5. Lift the heater box up and away from the engine.

6. Disconnect the green ground wire clip under the throttle (Fig. 19).

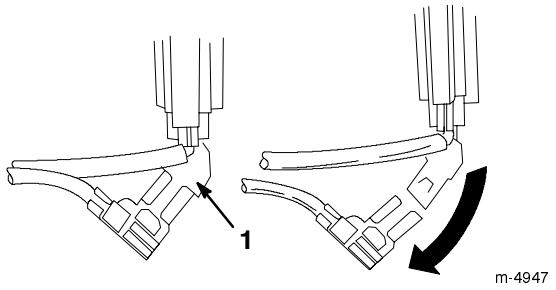

Figure 19

1. Green ground wire clip

7. Install the choke knob.

8. Connect the wire to the spark plug.

IMPORTANT: Use the heater box as a reference for the choke and throttle positions.

Installing the Heater Box

To install the heater box, reverse steps 1 through 8 of *Removing the Heater Box* on page 15. Make sure that you remove the fasteners from their holes before installing the heater box.

Starting the Engine

IMPORTANT: Make sure that the auger/impeller and the discharge chute contain no obstructions before you operate the snowthrower. *Use a stick, not your hand, to remove an obstruction from the discharge chute.*

1. Move the speed shift control to the *N* (*Neutral*) position and the throttle (Fig. 14) to the *Fast* position.

2. Make sure that the auger/impeller drive control lever and the traction control lever are in the *Disengaged* position (Fig. 13).

3. Open the fuel shutoff valve (Fig. 15) by rotating it counterclockwise.

4. Rotate the choke (Fig. 14) to the *Full* position.

5. Insert the ignition key (Fig. 14).

IMPORTANT: Do not use the primer or the choke if the engine has been running and is hot. Excessive priming may flood the engine and prevent it from starting.

6. Cover the hole in the center of the primer (Fig. 14) with your thumb and slowly push in the primer three times, pausing between each push.

7. Grasp the recoil starter handle (Fig. 17) and pull it out slowly until positive engagement results; then pull the handle vigorously to start the engine.

8. Keep a firm grip on the starter handle and return the rope slowly.

Note: If engine does not start or if the air temperature is –10°F (–23°C) or below, the engine may need additional priming. After pushing in the primer, try to start the engine before priming again.

9. After the engine starts, immediately rotate the choke (Fig. 14) to the 3/4 position. As the engine warms up, rotate the choke to the 1/2 position. When the engine warms up sufficiently, rotate the choke to the *Off* position.

IMPORTANT: Do not operate the snowthrower if the auger and impeller rotate when you disengage the auger/impeller drive control lever.

Stopping the Engine

1. Engage the auger to clear any remaining snow from inside the housing.

2. Run the engine for a few minutes to dry off any accumulated moisture.

3. With the engine running, do the following steps:

   A. Disengage the auger/impeller.

   B. Shift the traction into the neutral position.

   C. Pull the recoil starter handle several times to prevent it from freezing up.

   Note: Pulling on the recoil starter rope produces a loud, clattering sound. This does not harm the engine or the starter.

4. Release the traction and the auger/impeller drive control levers (Fig. 13).

5. Move the throttle to the *Stop* position, and remove the key from the ignition switch.

6. Close the fuel shutoff valve (Fig. 15).

7. Wait for all moving parts to stop before leaving the operating position.

Operating the Power Shift Feature

Move the wheels to the rear Power Shift position in heavy and/or drifted snow. Leave the wheels in the front position for light snow or for transporting the snowthrower.

With the engine running at full speed:

1. Release the traction drive control lever (Fig. 13).
2. Move the speed shift control fully forward to the Power Shift position and hold it there (Fig. 20).

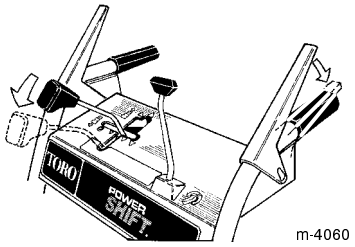

Figure 20

3. Fully engage the traction drive lever to move the wheels into the alternate position (Figs. 20 and 21).

Note: When shifting, you may need to slightly raise the handle to assist the wheel movement.

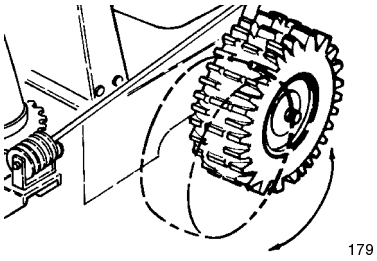

Figure 21

4. Release the speed shift control.

Note: To shift the wheels manually when the engine is not running, follow steps 1 and 2 and then lift up on the handles to unlock the wheels.

Freewheeling or Self-propelled Drive

You can operate the snowthrower with the self-propelling feature engaged or disengaged (freewheeling). There are two holes in each end of the axle. When you insert the axle pins through the outer axle holes and not through the wheel hubs (Fig. 22), the snowthrower freewheels. When you insert the axle pins through the holes in the wheel hubs and the inner axle holes (Fig. 22) and engage the traction control lever, the snowthrower propels itself.

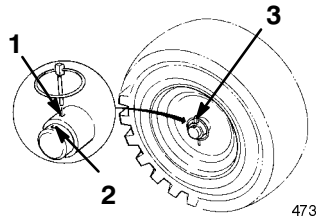

Figure 22

1. Inner axle hole
2. Outer axle hole and wheel hub
3. Axle pin

Adjusting the Headlight

1. Loosen the two nuts on the U-bolt that hold the headlight bracket to the handle (Fig. 23).

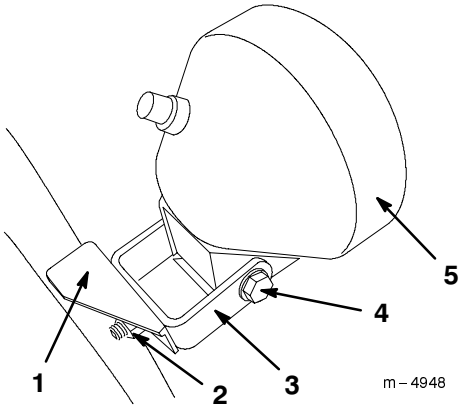

Figure 23

1. Bracket
2. Nut (2)
3. U-bolt
4. Pivot bolt
5. Headlight

2. Slide the bracket and the headlight to the desired position and tighten the nuts on the U-bolt.
3. Tighten the pivot bolt on the rear of the headlight assembly when the light is pointed in the desired direction.

Snowthrowing Tips

DANGER

POTENTIAL HAZARD
- **When the snowthrower is in operation, the impeller and auger can be rotating.**

WHAT CAN HAPPEN
- **The rotating auger/impeller can cut off or injure hands and feet.**

HOW TO AVOID THE HAZARD
- **Before adjusting, cleaning, repairing and inspecting the snowthrower, and before unclogging the discharge chute, *stop the engine and wait for all moving parts to stop.* Disconnect the wire from the spark plug and keep it away from the plug to prevent someone from accidentally starting the engine.**
- **Use a stick, *not your hands*, to remove an obstruction from the discharge chute.**
- **Stay behind the handles and away from the discharge opening while operating the snowthrower.**
- **Keep face, hands, feet, and any other part of your body or clothing away from concealed, moving, or rotating parts.**

WARNING

POTENTIAL HAZARD
- **Stones, toys, and other foreign objects may be picked up and thrown by the auger/impeller.**

WHAT CAN HAPPEN
- **Thrown objects can cause serious personal injury to the operator or to bystanders.**

HOW TO AVOID THE HAZARD
- **Keep the area to be cleared free of all objects that could be picked up and thrown by the auger/impeller.**
- **Keep all children and pets away from area of operation.**

- When you are not using the snowthrower, close the fuel shutoff valve and remove the key.
- Remove snow as soon as possible after it falls. This produces the best snow removal results.
- Adjust the skids to match the type of surface being cleaned. Refer to *Adjusting the Skids and the Scraper* on page 23.
- There are times when the front of the snowthrower may tend to ride up. If this happens, reduce the forward speed by shifting into a lower gear. If the front still tends to ride up, shift the wheels into the rear Power Shift position.
- Discharge the snow downwind whenever possible.
- Overlap each swath to ensure complete snow removal.
- If the wheels slip, shift the snowthrower into a lower gear to reduce the forward speed.
- Run the snowthrower for a few minutes after clearing the snow so that moving parts do not freeze. Engage the auger to clear any remaining snow from inside the housing.
- Do not overload the snowthrower by clearing snow at too fast a rate. If the engine slows down, shift the snowthrower into a lower gear to reduce the forward speed.
- Always use the *Fast* throttle position when throwing snow.
- In wet or slushy conditions, maintain the maximum engine speed, and do not overload the engine to prevent clogging the discharge chute.
- In some snowy and cold weather conditions, some controls and moving parts may freeze. Therefore, whenever any control becomes hard to operate, stop the engine and wait for all moving parts to stop; then check all parts for freeze up. **Do not use excessive force when trying to operate frozen controls.**
- When the snowthrower is in the rear Power Shift position, push down on the handles to increase traction if necessary.

Maintenance

Recommended Maintenance Schedule

Service Item	Service Operation	Initial	5 Hours	10 Hours	15 Hours	25 Hours	100 Hours	At Storage
Check the engine oil level	Check the oil level **before each use** and add oil if necessary.	X	X	X	X	X		X
Change the engine oil	Change the engine oil after the first two operating hours. Thereafter, as indicated.					X		X
Auger gear box	Check the auger gear box oil. Add oil if necessary.	X		X				X
Adjust the traction drive	Adjust the traction drive after the first hour of operation. Thereafter, as indicated.	X	X		X	X		
Replace the traction drive belt	Replace the traction drive belt as needed.							
Adjust the auger/impeller drive belt	Adjust the auger/impeller drive belt after the first hour of operation. Thereafter, as indicated.	X	X		X	X		
Replace the auger/impeller drive belt	Replace the auger/impeller drive belt as needed.							
Skids and the scraper	Adjust the skids and the scraper blade.	X			X			
Drive chain	Check and adjust the drive chain if necessary.					X		
Lubricating the snowthrower	Oil and grease the internal moving parts.				X			X

Service Item	Service Operation	Initial	5 Hours	10 Hours	15 Hours	25 Hours	100 Hours	At Storage
Spark plug	Clean, inspect, and gap. Replace if necessary.						X	
Fuel tank	Drain the gasoline and run the engine to dry out the tank and the carburetor.							X

CAUTION

POTENTIAL HAZARD
- **If you leave the wire on the spark plug, someone could start the engine.**

WHAT CAN HAPPEN
- **Someone accidentally starting the engine could seriously injure you or other bystanders.**

HOW TO AVOID THE HAZARD
- **Disconnect the wire from the spark plug before you do any maintenance. Set the wire aside so that it does not accidentally contact the spark plug.**

Checking the Engine Oil Level

Check the oil level every five operating hours or each time you use the snowthrower.

1. Move the snowthrower to a level surface.
2. Clean the area around the dipstick (Fig. 12).
3. Remove the dipstick from the crankcase (Fig. 12).
4. Wipe the dipstick clean with a clean cloth.
5. Fully install the dipstick.

Note: To ensure an accurate oil level reading, you must fully install the dipstick.

6. Remove the dipstick (Fig. 12).
7. Read the oil level on the dipstick.
8. If the oil level is below the *Full* mark, slowly add oil, checking the level frequently, until the dipstick reads *Full*.

   Use only a high-quality, SAE 5W–30 or SAE 10 weight detergent oil that has the American Petroleum Institute (API) “service classification”—SF, SG, SH, or SJ. For extremely cold conditions (below 0°F or –18°C), use 0W–30 weight detergent oil that has the American Petroleum Institute (API) “service classification”—SF, SG, SH, or SJ.

IMPORTANT: Do not overfill the crankcase and run the engine; engine damage will result. Drain the excess oil until the oil level on the dipstick reads *Full*.

9. Install the dipstick.

Changing the Engine Oil

Change the oil after the first two hours of operation and then every 25 hours of operation or annually, whichever comes first. Run the engine just before changing oil because warm oil flows better and carries more contaminants.

1. Disconnect the wire from the spark plug and make sure that the wire does not contact the plug (Fig. 24).

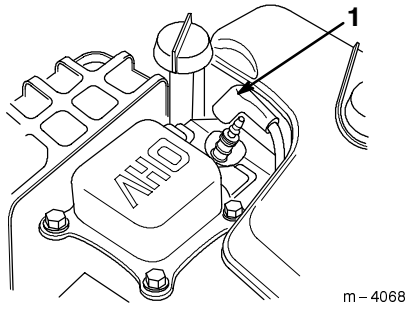

Figure 24

1. Spark plug wire

2. Clean the area around the oil drain plug (Fig. 25).

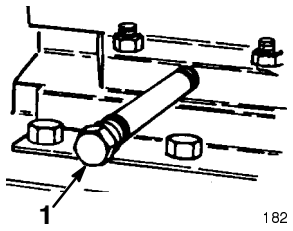

Figure 25

1. Drain plug

3. Slide the oil drain pan below the drain extension and remove oil drain plug (Fig. 25).
4. After draining the oil, install the oil drain plug.
5. Fill the crankcase with oil. Refer to *Filling the Engine Crankcase with Oil* on page 13.
6. Wipe up any spilled oil.
7. Connect the wire to the spark plug.

Checking the Auger Gear Box Oil

Check the auger gear box oil level after assembling the snowthrower, and as given in the *Recommended Maintenance Schedule* on page 19.

1. Disconnect the wire from the spark plug and make sure that the wire does not contact the plug (Fig. 24).
2. Position the snowthrower on a level surface.
3. Clean the area around the pipe plug (Fig. 26).

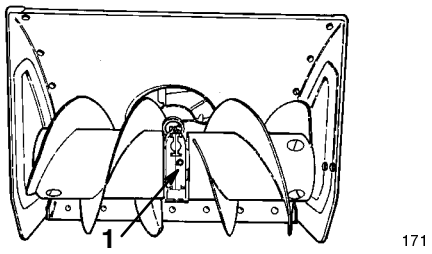

Figure 26

1. Pipe plug

4. Remove the pipe plug from the gear box (Fig. 26).
5. Check the oil level in the gear box. The oil must be at the point of overflowing in the filler opening.
6. If the oil level is low, add *GL-5 or GL-6 SAE 85-95 EP* transmission oil to the gear box until the point of overflow. **Do not use synthetic gear oil.**
7. Install the pipe plug in the gear box.
8. Connect the wire to the spark plug.

Adjusting the Traction Drive Belt

If the wheels do not turn when you depress the traction lever, increase the traction belt tension. **Whenever you replace the belt, adjust it.**

1. Loosen the upper jam nut that secures the traction cable to the mounting bracket (Fig. 27).

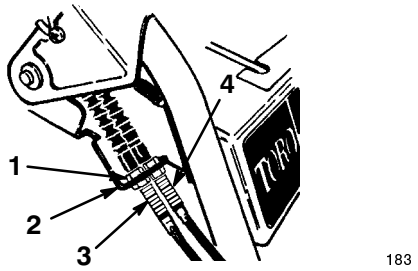

Figure 27

1. Jam nut
2. Mounting bracket
3. Auger/impeller cable (outer cable)
4. Traction cable (inner cable)

2. Rotate the bottom jam nut upward to increase the belt tension (Fig. 27).

Note: When adjusting the cable, always rotate the jam nut one full turn at a time.

3. Tighten the upper jam nut against the bracket.
4. Check the tension of the belt by operating the snowthrower.

   The snowthrower should begin to move forward when you press the traction lever approximately halfway down toward the handle grip.
5. Stop the engine and repeat steps 1 through 4 until you achieve the proper adjustment.

   IMPORTANT: Do not adjust the belt too tightly; a tight belt can cause the snowthrower to creep even after you disengage the traction lever. If this occurs, decrease the belt tension.

Adjusting the Auger/Impeller Drive Belt

Operating your snowthrower with an auger/impeller drive belt that slips decreases the snowthrowing performance and damages the belt.

IMPORTANT: Check the new auger/impeller drive belt for proper tension after five to ten operating hours.

1. Disconnect the wire from the spark plug and make sure that the wire does not contact the plug (Fig. 24).
2. Remove the three flange head cap screws that secure the belt cover to the engine frame and slide the belt cover up the cables (Fig. 5).
3. Depress the auger/impeller control lever on the right hand grip (Fig. 13).
4. Hold the lever and insert a .010 inch (.25 mm) feeler gauge between a coil in the center of the spring (Fig. 28).

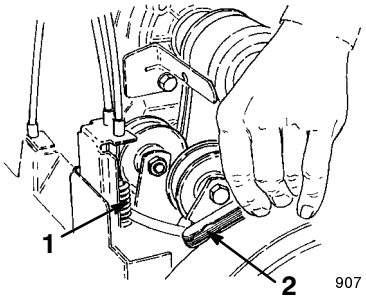

Figure 28

1. Center of spring
2. Feeler gauge

5. If the space between the coils is not .010 inch (.25 mm), adjust the cables as follows:
   A. Loosen the upper jam nut that secures the auger/impeller cable to the mounting bracket (Fig. 27).
   B. Rotate the bottom jam nut upward to increase the belt tension.
   C. Tighten the upper jam nut against the bracket.
6. Repeat steps 3 through 5.
7. Check the impeller brake arm clearance by releasing the auger/impeller control lever.

   Note: With the lever released, there should be more than 1/8 inch (3 mm) clearance between the tab on the impeller idler arm and the brake arm (Fig. 29).

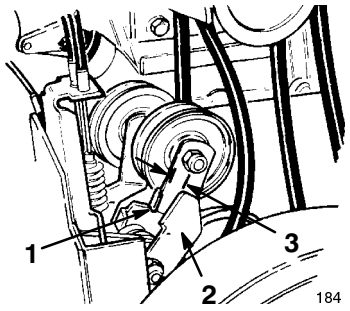

Figure 29

1. Impeller idler arm
2. Brake arm
3. 1/8 inch (3 mm) minimum

IMPORTANT: If there is less than 1/8 inch (3 mm) clearance between the tab on the impeller idler arm and the brake arm, replace the belt. Refer to *Replacing the Drive Belts* on page 23.

DANGER

POTENTIAL HAZARD
- **Improper adjustment may cause injury if the auger/impeller turns when disengaged.**

WHAT CAN HAPPEN
- **The rotating impeller or auger can cut off or injure fingers or hands.**

HOW TO AVOID THE HAZARD
- **Keep your face, hands, feet, and any other part of your body or clothing away from concealed, moving, or rotating parts.**
- **Make sure that the impeller brake arm clearance is maintained.**
- **Do not adjust the auger/impeller drive belt too tight because it may cause the auger/impeller to turn when the control lever is in the disengaged position. If this occurs, decrease belt tension.**

8. Install the belt and the cable covers.
9. Check the belt tension by operating the auger/impeller.
10. **If belt still slips, replace the belt.** Refer to *Replacing the Drive Belts* on page 23.
11. Connect the wire to the spark plug.

Replacing the Drive Belts

If the auger/impeller drive belt or the traction drive belt (Fig. 30) becomes worn, oil-soaked, or otherwise damaged, replace the belt.

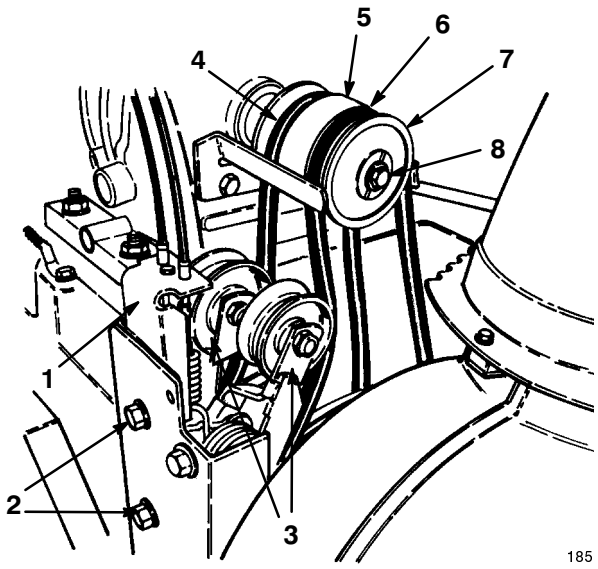

Figure 30

1. Idler pulley assembly
2. Flange head cap screws
3. Idler pulley
4. Traction drive belt
5. Middle pulley section
6. Auger/impeller drive belt
7. Half sheave
8. Cap screw and lock washer

---

1. Disconnect the wire from the spark plug and make sure that the wire does not contact the plug (Fig. 24).
2. Remove the three flange head cap screws that secure the belt cover to the engine frame and slide the belt cover and the cable cover up the cables (Fig. 5).
3. Move the speed shift control to the *N* (*Neutral*) position.
4. Remove the two flange head cap screws that secure the idler pulley assembly to the engine frame and remove idler pulley assembly (Fig. 30).
5. Remove the cap screw and the lock washer that secure the half sheave to the front of the pulley assembly (Fig. 30).
6. Slide the half sheave and auger/impeller belt off the crankshaft and remove the belt from the impeller pulley (Fig. 30).
7. If you need to replace the traction drive belt, slide the middle pulley section and the belt off the crankshaft, and remove the belt from the pulley (Fig. 30).
8. On the control cable that corresponds to the belt being replaced, loosen the jam nuts that secure the cable to the bracket (Fig. 27).

Note: The cable must slide freely in the bracket when you change the belts.

9. If you replace the traction drive belt, install it around the traction drive and the middle pulley section, and slide the middle pulley section onto the crankshaft (Fig. 30).
10. Install the belt on the idler pulley (Fig. 30).
11. Install the auger/impeller drive belt around the half sheave, and slide the half sheave onto the crankshaft (Fig. 30).

Note: Make sure that the tabs on the half sheave are inserted into the mounting grooves in the middle pulley.

12. Install the cap screw and the lock washer that secure the half sheave to the front of the pulley assembly.
13. Install the idler pulley assembly on the engine frame and secure it with the two flange head cap screws (Fig. 30).

Note: Make sure that the idler pulleys align with the belts when you install the idler pulley assembly.

14. Install the belt and the cable covers.
15. To adjust the belts, refer to *Adjusting the Auger/Impeller Drive Belt* on page 21, or *Adjusting the Traction Drive Belt* on page 21.
16. Connect the wire to the spark plug.

Adjusting the Skids and the Scraper

Adjust the scraper to compensate for wear and to make sure that the auger does not contact the pavement.

1. Disconnect the wire from the spark plug and make sure that the wire does not contact the plug (Fig. 24).
2. Check the air pressure in the tires; refer to *Checking the Tire Pressure* on page 14.
3. Move the snowthrower onto a level surface and shift the wheels to the front position.
4. Loosen the four flange bolts that secure both skids to the auger side plates (Fig. 10) until the skids slide up and down easily.
5. Loosen the carriage bolts that secure the scraper to the auger housing (Fig. 9).
6. Support the **auger blades** so that the auger is 1/8 to 1/4 inch (3 to 6 mm) off the ground.
7. Move the scraper so that it contacts the flat surface all the way across.
8. Tighten the two rear-flanged cap screws that secure the scraper and skids to the side plates.

9. Tighten all of the scraper fasteners.

For Concrete and Asphalt Surfaces:

If the snowthrower does not clear the snow close enough to the pavement, adjust the skids to lower the scraper; if the pavement surfaces are cracked, rough, or uneven, adjust the skids to raise the scraper.

A. Move the wheels to the **rear** Power Shift position.

B. Support the scraper 1/8 inch (3 mm) above a level surface.

Note: The scraper should be higher than 3/16 inch (5 mm) above the pavement if the pavement surfaces are cracked, rough, or uneven.

C. Move the skids down to sit flat on the ground.

D. Tighten the four flange bolts that secure both skids (Fig. 10).

For Gravel Surfaces:

Support the auger blades a few inches (centimeters) above the ground, and adjust the skids to prevent the snowthrower from picking up rocks.

A. Support the auger a few inches (centimeters) above the ground.

B. Slide the skids down as far as possible.

C. Tighten the flange bolts that secure the skids to the scraper (Fig. 10).

10. Connect the wire to the spark plug.

Adjusting the Drive Chain

Adjust the drive chain to maintain a 1/8 to 3/8 inch (3 to 10 mm) deflection mid span between the transmission and the axle sprocket. Check the chain deflection after every 25 operating hours.

1. Disconnect the wire from the spark plug and make sure that the wire does not contact the plug (Fig. 24).

2. Drain the gasoline from the fuel tank. Refer to *Emptying the Fuel Tank* on page 25.

3. Shift the wheels into the rear position, **move the speed shift control into second gear**, and tip the snowthrower up onto the front edge of the auger/impeller housing.

4. Check the deflection of the chain by lifting up on chain with moderate pressure at the mid span. There should be 1/8 to 3/8 inch (3 to 10 mm) deflection (Fig. 31).

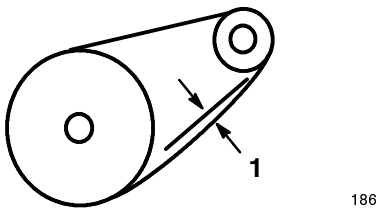

Figure 31

1. 1/8 to 3/8 inch (3 to 10 cm) deflection

5. If the deflection is not as specified, go to step 6; otherwise, return the snowthrower to the upright position.

6. Loosen the four flange head cap screws (two on each side) that secure the transmission frame to the engine frame (Figs. 32 and 33).

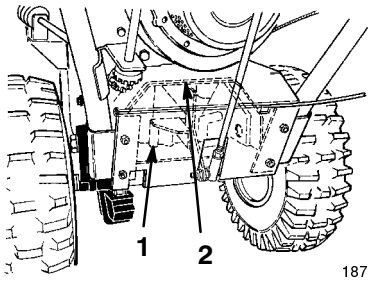

Figure 32

1. Transmission 2. Transmission frame

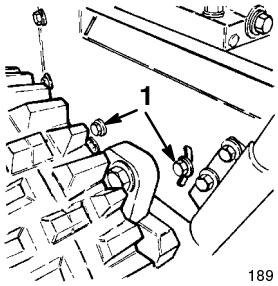

Figure 33

1. Flange head cap screws

7. Pivot the rear of the transmission frame until the chain deflection is 1/8 to 3/8 inch (3 to 10 mm).

8. Tighten the flange head cap screws.

9. Check the chain deflection.

IMPORTANT: Excessive chain tension may cause transmission damage.

10. Check the speed shift control alignment with the Power Shift slot. If the gear shift lever does not align with the Power Shift slot in the control panel (see inset in Fig. 6), adjust the shift rod length as follows:

    A. Disconnect the ball joint from the transmission lever and loosen the jam nut.

    B. Rotate the ball joint up or down until the gear shift lever aligns with the Power Shift slot.

    C. Install the ball joint to the transmission lever and tighten the jam nut.

11. Connect the wire to the spark plug.

Lubricating the Snowthrower

Lubricate the snowthrower periodically as given in the *Recommended Maintenance Schedule* on page 19.

1. Disconnect the wire from the spark plug and make sure that the wire does not contact the plug (Fig. 24).
2. Lightly lubricate the drive chain with a chain lubricant (Fig. 34).

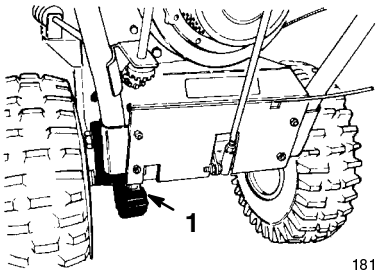

Figure 34

1. Drive chain

3. Wipe up any excess oil.
4. Connect the wire to the spark plug.

Replacing the Spark Plug

Use a *Champion RN4C* spark plug or equivalent. Since the air gap between the center and the side electrodes of the spark plug increases gradually during normal engine operation, install a new plug after every 100 operating hours.

1. Clean the area around the spark plug so that foreign matter does not fall into cylinder when removing the spark plug.
2. Disconnect the wire from of the spark plug (Fig. 24) and remove the plug from the cylinder head.

IMPORTANT: Replace a cracked, fouled, or dirty spark plug. Do not sandblast, scrape, or clean the electrodes because grit may eventually release from the plug and fall into the cylinder and cause engine damage.

3. Set the air gap between the spark plug electrodes at 0.030 inch (0.76 mm) (Fig. 35).

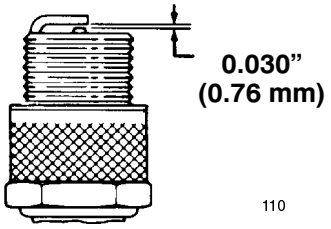

Figure 35

4. Install the spark plug in the cylinder head.
5. Torque the spark plug to 15 ft-lb (20.4 N·m).
6. Connect the wire to the spark plug.

Emptying the Fuel Tank

1. Disconnect the wire from the spark plug and make sure that the wire does not contact the plug (Fig. 24).
2. Close the fuel shutoff valve (Fig. 15).

DANGER

POTENTIAL HAZARD
- **Gasoline is highly flammable.**

WHAT CAN HAPPEN
- **Gasoline can ignite and cause serious personal injury.**

HOW TO AVOID THE HAZARD
- **Drain gasoline outdoors.**
- **Drain gasoline from a cold engine only.**
- **Wipe up any gasoline that may have spilled.**
- **Do not drain gasoline near any open flame or where gasoline fumes may be ignited by a spark.**
- ***Do not smoke* a cigar, a cigarette, or a pipe when handling gasoline.**

3. Place a clean drain pan under the fuel shutoff valve.
4. Loosen the hose clamp that secures the fuel line to the valve and slide the line off the valve (Fig. 15).
5. Open the fuel shutoff valve by rotating it counterclockwise to allow the fuel to flow into the drain pan.
6. Install the fuel line and secure it with a hose clamp.

7. Connect the wire to the spark plug.

8. Start the snowthrower and run the engine until it stops.

Troubleshooting

Toro designed and built your snowthrower for trouble-free operation. Check the following components and items carefully, and refer to *Maintenance* on page 19 for more information. If a problem continues, see your Authorized Service Dealer.

PROBLEM	POSSIBLE CAUSES	CORRECTIVE ACTION
Electric starter does not turn (electric start models only)	1. The power cord is disconnected at the outlet or the snowthrower.	1. Connect the power cord to the outlet and/or the snowthrower.
	2. The power cord is worn, corroded, or damaged.	2. Replace the power cord.
	3. The power outlet is not energized.	3. Have a qualified electrician energize the power outlet.
Engine does not start or starts hard	1. The key is not in the ignition or is in the *Off* position.	1. Insert the key into the ignition and turn it to the *On* position.
	2. The choke is in the *Off* position and the primer has not been pressed.	2. Move the choke to the *On* position and press the primer three times.
	3. The fuel shutoff valve is not open.	3. Open the fuel shutoff valve.
	4. The throttle is not in the *Fast* position.	4. Move the throttle to the *Fast* position.
	5. The fuel tank is empty or the fuel system contains stale fuel.	5. Drain and/or fill the fuel tank with fresh gasoline (not more than 30 days old). If the problem persists, contact your Authorized Service Dealer.
	6. The spark plug wire is loose or disconnected.	6. Connect the wire to the spark plug.
	7. The spark plug is pitted, fouled, or the gap is incorrect.	7. Clean the spark plug and check and adjust the spark plug gap. Replace the spark plug if it is damaged.
	8. The fuel cap vent is restricted.	8. Remove the vent restriction or replace the fuel cap.
	9. The engine oil level in the engine crankcase is too low or too high.	9. Add or drain the oil level in the engine crankcase to the *Full* mark on the dipstick.
	10. The air temperature is above 40°F (4°C) and the heater box is on the snowthrower.	10. Remove the heater box if you operate the snowthrower when the air temperature is above 40°F (4°C).

PROBLEM	POSSIBLE CAUSES	CORRECTIVE ACTION
Engine runs rough	1. The choke is in the *On* position.	1. Move the choke to the *Off* position.
	2. The fuel shutoff valve is not completely open.	2. Open the fuel shutoff valve.
	3. The fuel tank is nearly empty or contains stale fuel.	3. Drain and fill the fuel tank with fresh gasoline (not more than 30 days old). If the problem persists, contact your Authorized Service Dealer.
	4. The spark plug wire is loose.	4. Connect the wire to the spark plug.
	5. The spark plug is pitted, fouled, or the gap is incorrect.	5. Clean the spark plug and check and adjust the spark plug gap. Replace the spark plug if it is damaged.
	6. The engine oil level in the engine crankcase is too low or too high.	6. Add or drain the oil level in the engine crankcase to the *Full* mark on the dipstick.
	7. The air temperature is above 40°F (4°C) and the heater box is on the snowthrower.	7. Remove the heater box if you operate the snowthrower when the air temperature is above 40°F (4°C).
Engine runs, but the snowthrower discharges snow poorly or not at all	1. The throttle is not in the *Fast* position when throwing snow.	1. Move the throttle to the *Fast* position when throwing snow.
	2. The snowthrower is moving too fast to clear the snow.	2. Shift the snowthrower into a lower gear.
	3. You are trying to remove too much snow per swath.	3. Reduce the amount of snow removed for per swath.
	4. The discharge chute is plugged.	4. Stop the engine, wait for all moving parts to stop, and use a stick to remove the snow from the discharge chute.
	5. You are trying to remove extremely heavy or wet snow.	5. Don't overload the snowthrower with extremely heavy or wet snow.
	6. The auger/impeller drive belt is loose or is off the pulley.	6. Install and/or adjust the auger/impeller drive belt.
	7. The auger/impeller drive belt is worn or broken.	7. Replace the auger/impeller drive belt.
Snowthrower does not properly clear the snow off the surface	1. The tire pressure is low.	1. Check the pressure in the tires and adjust it if necessary.
	2. The skids and/or the scraper is not properly adjusted.	2. Adjust the skids and the scraper.

PROBLEM	POSSIBLE CAUSES	CORRECTIVE ACTION
Snowthrower tends to “ride up” on the snow	1. The snow on the surface to be cleared is compacted down. 2. The snowthrower is moving too fast to clear the snow. 3. The wheels are not in the rear position (Power Shift models only).	1. Throw the snow off the surface before it becomes compacted. 2. Shift the snowthrower into a lower gear. 3. Move the wheels to the rear Power Shift position.
Auger/impeller doesn’t stop properly	1. The auger/impeller drive belt is too tight.	1. Adjust the auger/impeller drive belt. If the problem persists, contact your Authorized Service Dealer.
Speed selector shifts properly but the snowthrower does not drive in forward or reverse speeds	1. The traction drive belt is loose. 2. The traction drive belt is worn or broken.	1. Adjust the traction drive belt. 2. Replace the traction drive belt.
Snowthrower runs slow or does not allow you to shift into the No. 5 speed	1. The speed selector linkage is improperly adjusted.	1. Adjust the speed selector linkage.
The controls cannot move	1. There is frozen snow and ice on the controls	1. **Do not attempt to force or operate the controls.** Allow the controls to thaw out before operating.

Storage

WARNING

POTENTIAL HAZARD
- **Gasoline fumes are highly flammable, explosive, and dangerous if inhaled.**

WHAT CAN HAPPEN
- **If the product is stored in an area with an open flame, the gasoline fumes may be ignited, causing an explosion.**

HOW TO AVOID THE HAZARD
- **Do not store the snowthrower in a house (living area), basement, or any other area where ignition sources may be present, such as hot water and space heaters, clothes dryers, furnaces, and other like appliances.**

Preparing the Fuel System

1. Add stabilizer/conditioner to the fuel in the fuel tank as directed.
2. Run the engine for ten minutes to distribute the conditioned fuel through the fuel system.
3. Stop the engine and allow it to cool.
4. Drain the fuel tank. Refer to *Emptying the Fuel Tank* on page 25.
5. Start the engine and run it until it stops.
6. Choke or prime the engine, start it a third time, and run the engine until it will not start.
7. Dispose of unused fuel properly. Recycle it according to local codes, or use it in your automobile.

Note: Do not store stabilized gasoline for more than 90 days.

Preparing the Engine

1. Remove the spark plug from the cylinder head.
2. Pour two teaspoons of oil into the spark plug hole.
3. Install the spark plug, but do not connect the wire to the plug.
4. Pull the recoil starter slowly to distribute oil on the inside of the cylinder.
5. Change the engine oil. Refer to *Changing the Engine Oil* on page 20.

Preparing the Snowthrower

1. Lubricate the snowthrower. Refer to *Lubricating the Snowthrower* on page 25.
2. Clean the snowthrower.
3. Touch up chipped surfaces with paint available from an Authorized Service Dealer. Sand affected areas before painting, and use a rust preventative to prevent the metal parts from rusting.
4. Tighten all screws and nuts. Repair or replace any damaged parts.
5. Cover the snowthrower and store it in a clean, dry place out of the reach of children. Allow the engine to cool before storing it in any enclosure.

Accessories

You can obtain the following snowthrower accessories from your Authorized Service Dealer:

- 230 V AC Electric Starter Kit
- 110 V AC Electric Starter Kit
- Differential Kit
- Tire Chain Kit (for standard axle; not for use with the Differential Kit)
- Cab Kit
- Weight Kit
- Drift Breaker Kit


TORO®