FORM NO. 3325–330

TORO

MODEL NO. 03871–210000001 & UP

OPERATOR'S MANUAL

DETHATCHING CUTTING UNIT

Reelmaster® 6500D & 6700D

SAFETY AND INSTRUCTION DECALS

The following safety and instruction decals are installed on the machine. If any become damaged or illegible, replace them. Decal part numbers are listed below and in the parts catalog. Order replacements from your Authorized Toro Distributor.



On Grass Shield
Part No. 67–7960
Keep Hands & Feet Away From Rotating Reel

SPECIFICATIONS

Reel Construction: Blades and spacers bolted to square shaft.

Dethatching Range: Up to 1/4" deep blade penetration.

Reel Diameter: 7 in.

Power: Hydraulic motor splined to reel shaft.

Reel Bearings: Self aligning, roller ball type with cast housing and eccentric collar lock with setscrew.

Roller Adjustment: Front–Fixed, Rear–Positive adjustment knob.

ADJUSTING DETHATCHING REEL

Important: Read this Operator's Manual thoroughly before operating the dethatching unit. Failure to do so may result in damage to the dethatching reel.

LEVELING ROLLERS (Fig. 1)

1. Place the dethatcher reel on a level surface.

2. Make sure front roller is mounted in the top set of mounting holes in side plates and rear roller is adjusted to highest position.

3. Loosen nuts securing front roller brackets to side plates.

4. Push rearward on roller, hold mounting capscrews stationary and tighten nuts. Do not turn capscrews, doing so may alter roller adjustment.

5. Place a gauge bar under dethatcher reel blades. Be sure bar covers full length of dethatcher reel blades.

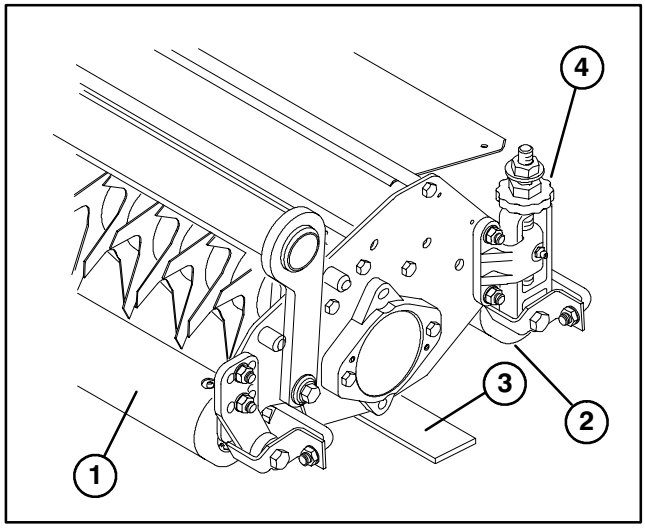

Figure 1
1. Front roller
2. Rear roller
3. Gauge bar
4. Adjusting knob

6. Rotate adjusting knobs on rear H.O.C. brackets to raise or lower rear roller bracket so both front and rear rollers are in contact with the flat surface and each end of reel blades rest on the gauge bar.

© The TORO Company – 2000

ADJUSTING DETHATCHING REEL

ADJUSTING DETHATCHER BLADE DEPTH (Fig. 2)

Note: Maximum recommended setting is 1/4" deep blade penetration.

1. Place the dethatcher reel on a level surface.

2. Make sure front roller is mounted in the top set of mounting holes in side plates.

3. Place (2) gauge bars, which have the desired depth of blade penetration below ground, under the front and rear rollers of the dethatcher reel.

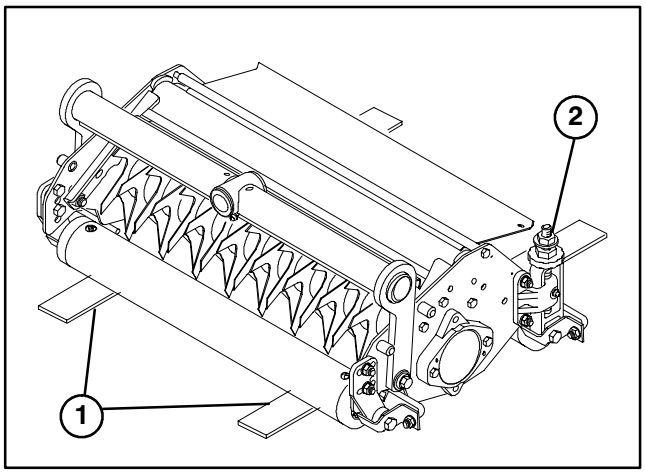

Figure 2
1. Gauge bar
2. Adjusting knob

4. Turn the adjusting knob on each H.O.C. bracket so the dethatcher reel blades come in contact with the level surface on both ends.

Note: As the dethatcher blades wear, the diameter of the reel will decrease and the depth setting will change. Check height setting periodically to insure desired setting is achieved.

ADJUSTING FRONT GRASS SHIELD (Fig. 3)

1. Loosen capscrew on right side of dethatcher reel, securing front grass shield pivot.

2. Rotate top of front grass shield to desired height and tighten capscrew.

3. Rotate the dethatcher blades to insure the blades do not contact or interfere with the shield.

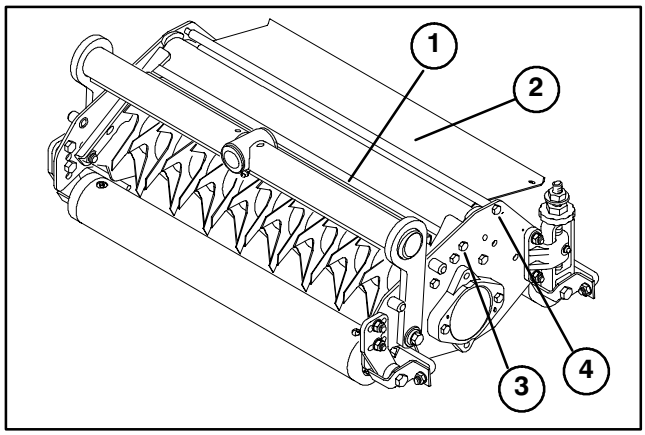

Figure 3
1. Front grass shield
2. Rear grass shield
3. Capscrew – front
4. Capscrew – rear

ADJUSTING REAR GRASS SHIELD (Fig. 3)

Note: When operating in turf conditions where much debris is encountered, or unusually heavy thatch, open the rear discharge shield to help allow the debris to discharge from the reel.

1. Loosen the capscrew on the left side of the dethatcher reel, located on the pivot of the rear grass shield.

2. Rotate the rear grass shield to the desired setting and tighten the capscrew.

ADJUSTING ROLLER SCRAPERS (Fig. 4)

1. Thread jamnuts, on scraper rods, in or out to attain .060" clearance between scraper and roller.

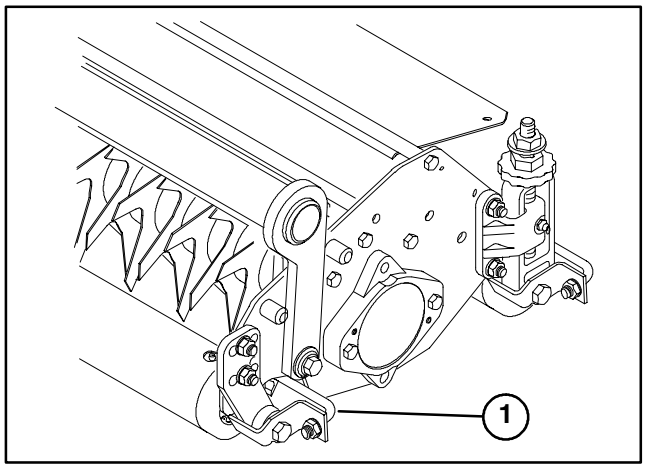

Figure 4
1. Front roller scraper

2. Assure scraper rod is parallel to roller and level surface.

Note: Adjust scraper to desired position to meet turf conditions.

ADJUSTING DETHATCHING REEL

INSTALL DETHATCHER UNITS (Fig. 5–8)

Important: When lowering dethatcher reels, care must be taken to prevent damage to the reel blades due to contact with a concrete floor or a paved surface.

Dethatcher units can be installed at any of the five or seven mounting locations on the traction unit. Figure 5 shows the orientation of the hydraulic drive motor for each of the locations. For any of the locations requiring the motor to be mounted on the right end of the cutting unit, install a counter weight on the left end of the cutting unit. For the locations requiring the motor to be mounted on the left end, install a counter weight on the right end of the cutting unit.

Dethatcher units do not use speed sensors. Secure (2) speed sensor assemblies to lift arms with cable ties.

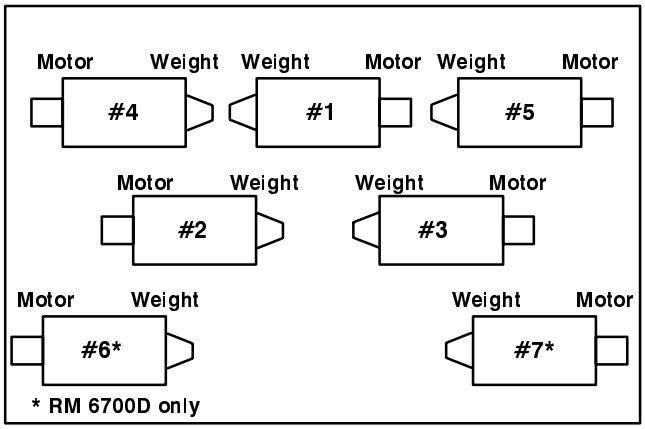

Figure 5

Note: Counter weights are shipped installed to right end of the dethatching units. The capscrews on left end are to be used for securing the hydraulic motor.

3. Remove protective plug from left end of cutting unit.

4. Lubricate and install a large O–ring into bearing housing groove on each end of dethatcher unit (Fig. 6 & 8).

Note: Before installing motors or counterweights, lubricate internal splines of dethatcher unit reels shafts with grease.

5. Install a counter weight onto appropriate end of each cutting unit with capscrews provided (Fig. 6).

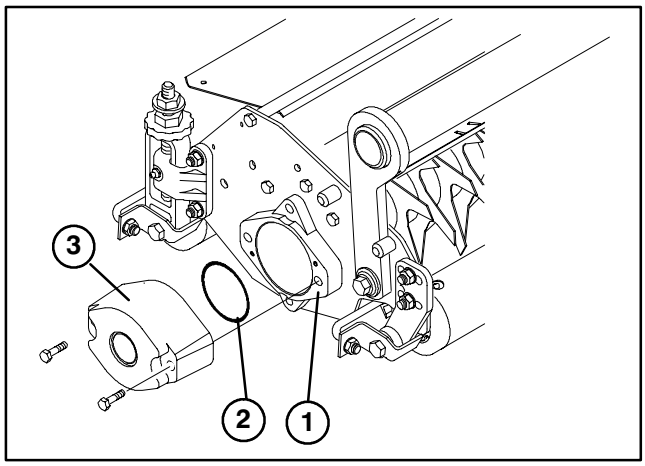

Figure 6

1. Bearing housing
2. O–ring
3. Counterweight

6. Insert a thrust washer onto horizontal shaft of pivot knuckle as shown in figure 7.

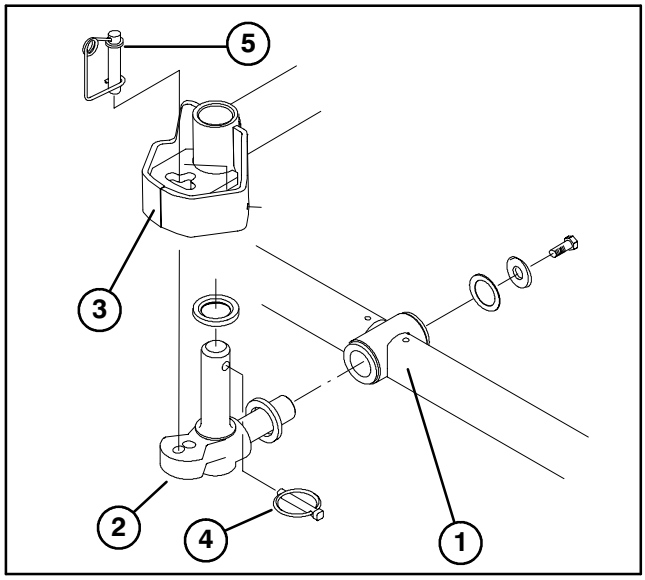

Figure 7

1. Carrier frame
2. Pivot knuckle
3. Lift arm steering plate
4. Lynch pin
5. Steering pin

7. Insert the horizontal shaft of the pivot knuckle into the mounting tube of the carrier frame (Fig. 7).

8. Secure pivot knuckle to carrier frame with a thrust washer, flat washer and a flange head capscrew (Fig. 7).

9. Insert a thrust washer onto vertical shaft of pivot knuckle (Fig. 7).

10. Insert the vertical shaft of the pivot knuckle into lift arm pivot hub (Fig. 7). Guide the pivot knuckle in place between the two rubber centering bumpers in the under side of the lift arm steering plate.

11. Insert the lynch pin into the cross hole on the pivot knuckle shaft (Fig. 7).

ADJUSTING DETHATCHING REEL

12. Mount motor to drive end of the cutting unit and secure with two capscrews provided (Fig. 8).

13. On front center and left rear cutting units, secure speed sensor wire harness to traction unit lift arm with a cable tie.

14. Insert steering pin into front mounting hole on pivot knuckle (Fig. 7). Rear mounting hole is not recommended for dethatcher use.

15. Hook wire around bottom of pin.

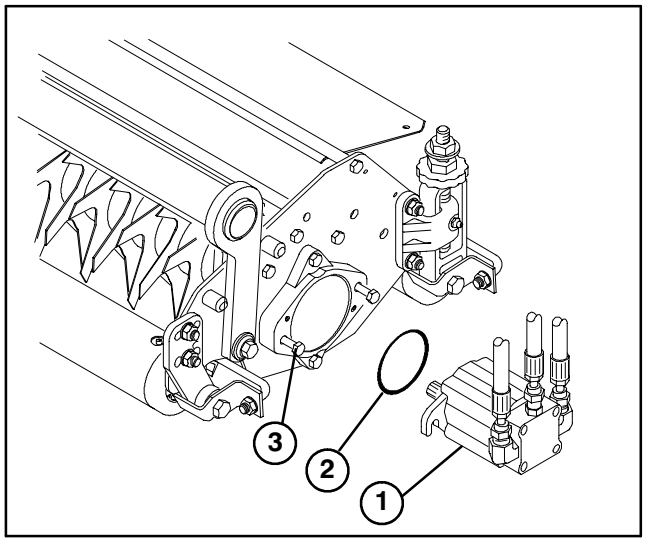

Figure 8
1. Motor
2. O–ring
3. Capscrew

OPERATION

TRAINING PERIOD

Before operating the dethatching reels on a fairway, evaluate the performance of the dethatcher at the desired setting. Operate in a clear, unused area to determine if the desired results will be achieved. Adjust the dethatcher if a change is desired.

OPERATING TIPS

1. Operate the traction unit at full throttle and between 3–5 MPH.

3. Maximum setting on the dethatcher blades 1/4" deep penetration.

4. Power requirements to operate the dethatcher units will vary with turf and soil conditions. Travel speed may need to be reduced in some conditions.

LUBRICATION

Each cutting unit has (8) grease fittings that must be lubricated regularly with No. 2 General Purpose Lithium Base Grease.

1. The grease fitting locations and quantities are: reel bearings (2), front and rear rollers (2 ea.) and H.O.C. brackets (2).

IMPORTANT: Lubricating cutting units immediately after washing helps purge water out of bearings and increases bearing life.

1. Wipe each grease fitting with a clean rag.

2. Apply grease until pressure is felt against handle.

IMPORTANT: Do not apply too much pressure or grease seals will be permanently damaged.

3. Wipe excess grease away.

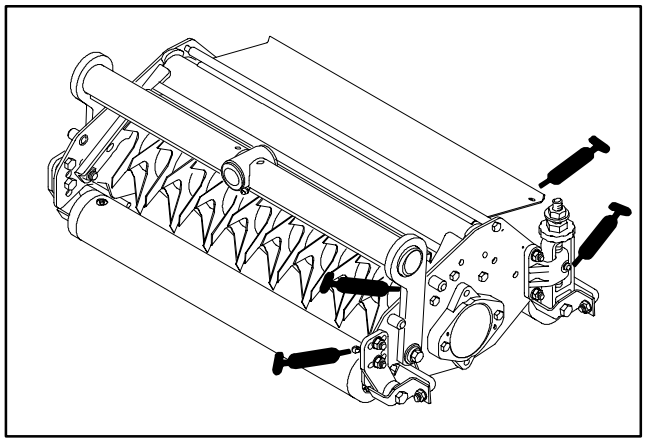

Figure 9

MAINTENANCE

REMOVING DETHATCHER REEL (Fig. 10)

1. Remove (2) capscrews securing counterweight to sideplate of dethatcher. Remove counterweight.

2. Remove (2) capscrews securing reel motor to bearing housing on drive end of dethatcher. Remove reel motor.

3. Remove the setscrews from the locking collars on the reel bearings.

4. With a drive pin and hammer, loosen the locking collars by driving the locking collar in direction opposite to normal rotation.

5. Remove (2) capscrews securing each bearing housing to ends of dethatcher and remove bearing housings.

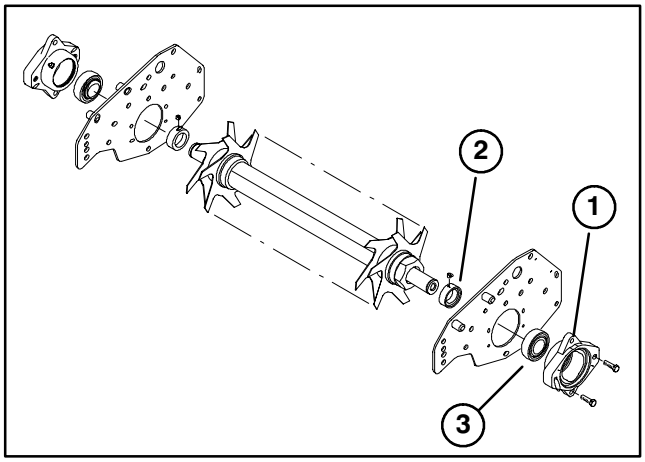

Figure 10
1. Bearing housing
2. Locking collar
3. Bearing

6. Carefully pull the dethatching reel assembly out of frame assembly along with the (2) locking collars.

REMOVING DETHATCHER BLADES FROM SHAFT (Fig. 11)

1. Secure end of dethatcher shaft, opposite nut, in a vise.

2. On other end of shaft, rotate nut counter–clockwise. Remove nut.

CAUTION

Use caution when removing blades from shaft as they are extremely sharp and may have burrs that will cut your hands.

3. Remove cupped end spacer, blades and spacers. Clean and lubricate square shaft with a light coating of grease to simplify assembly.

IMPORTANT: Do not invert dethatching reel blades. The order of disassembly is extremely important. Do not invert dethatching reel blades when disassembling or reverse the order when assembling. Note the thatcher blades index hole. The index hole is provided for assembly in order to obtain the proper helix for the dethatching reel.

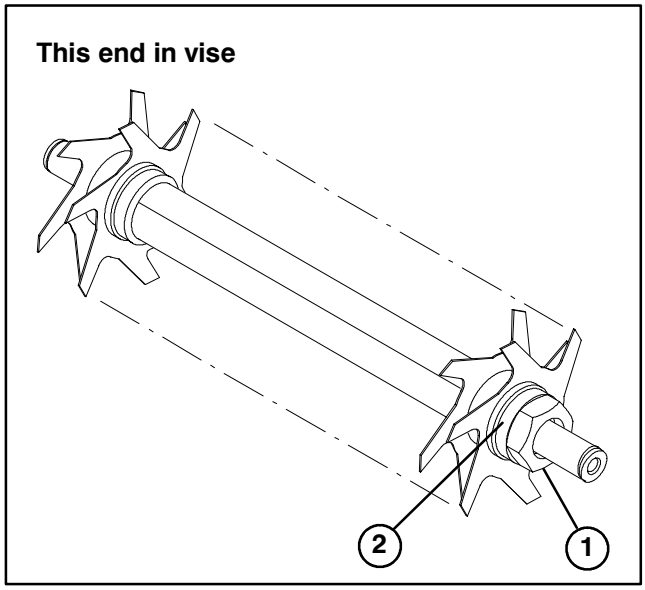

Figure 11
1. Nut
2. Cupped end spacer

INSTALLING DETHATCHER BLADES (Fig. 11)

1. First, assemble a reel dethatcher blade.

2. Next, assemble a 1 in. and a 1/4 in. spacer.

3. Do not invert dethatcher reel blades when reassembling on reel shaft. If the blades are inverted, the blades that are in use, (rounded) will be mixed with the sharp ends of the blades which were not in use. This will cause unsatisfactory performance in the dethatcher reel unit. Attention should always be taken when disassembling dethatching blades from reel.

4. Install the next blade counter–clockwise so the index reference hole is not aligned with the first blade hole by one flat of the shaft. Continue to install spacers and blades in this manner until the full complement of blades ave been installed. When properly assembled, the blades will be staggered in such a manner to give a helix appearance.

5. Install cupped end spacer to shaft (flat end outward) (Fig. 11).

6. Apply Blue Loctite #242 to nut, install nut on shaft and tighten to 80 –100 ft–lb.

ASSEMBLE DETHATCHER REEL (Fig. 12)

1. Slide the reel bearing locking collars onto the reel shaft with the locking collars facing inward and not tightened.

2. Place dethatcher shaft assembly into frame assembly. Through side plates, slide a bearing housing onto each end of dethatcher shaft. Secure bearing housings to sideplates with capscrews previously removed. Tighten capscrews to 170–220 in–lbs (14–18 ft–lb).

3. Position the reel shaft assembly so the end of shaft is .43 inward from the outside surface of bearing housing.

4. Use a drive pin and hammer to tighten the locking collars on the reel shaft bearings. Tighten in direction of rotation. Tighten setscrews.

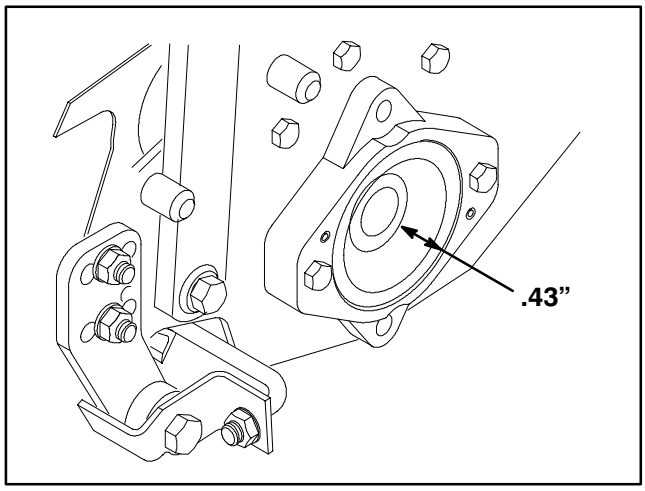

Figure 12

OPTIONAL BLADE CONFIGURATIONS

The dethatching reel is shipped from the factory with 1–1/4" spacing between blades. A kit is available for other spacing options per reel, if desired. Configurations are shown below.

1" Spacing, Kit Part No. 93–4346 – Includes (4) Blades (part no. 93–3038), (15) 1/4" Thick Spacers (part no. 94–2720) and (4) 1" Thick Spacers (part no. 93–3092) (Fig. 13).

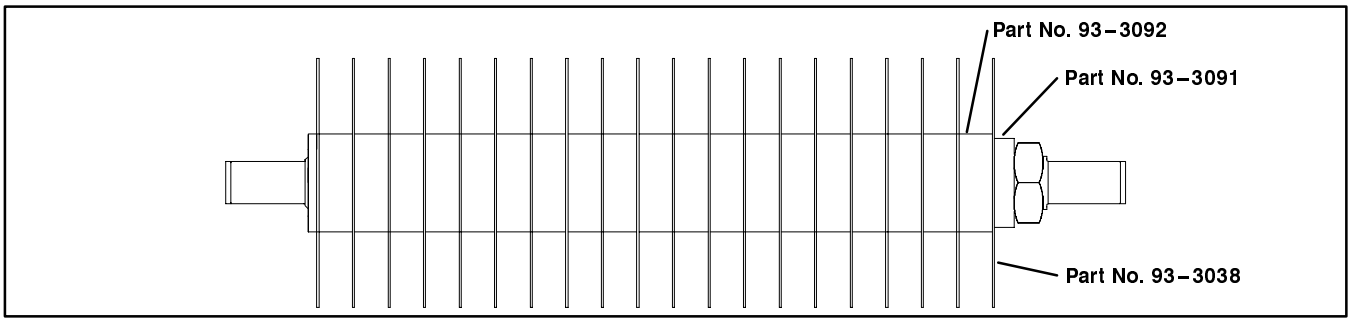

Figure 13

1–1/4" Spacing (Standard) (Fig. 14).

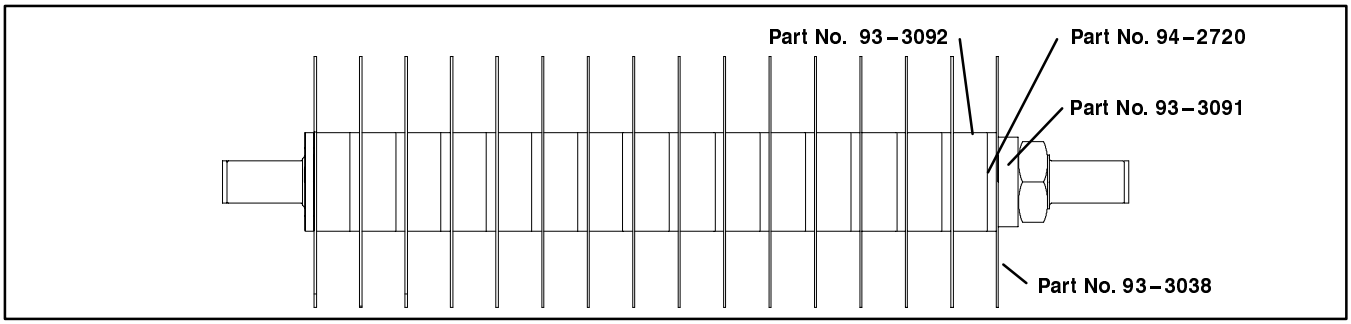

Figure 14

1–1/2" Spacing (Fig. 15).

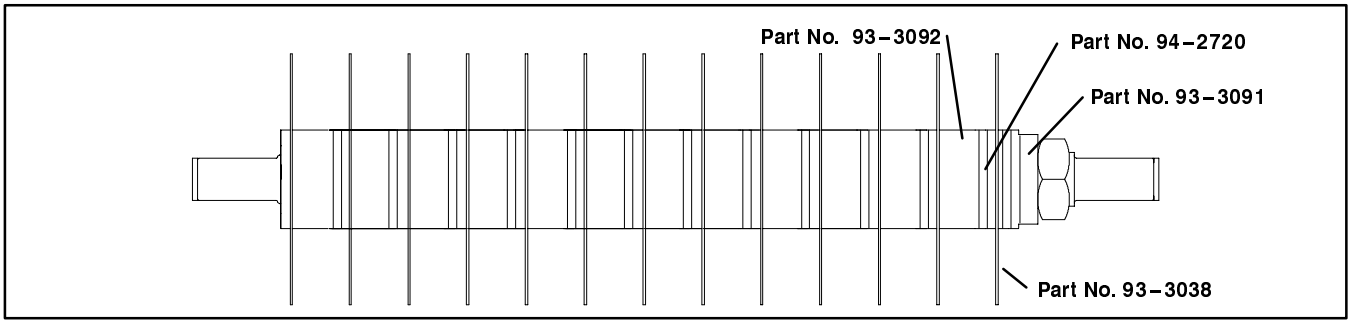

Figure 15

1–3/4" Spacing, (Fig. 16).

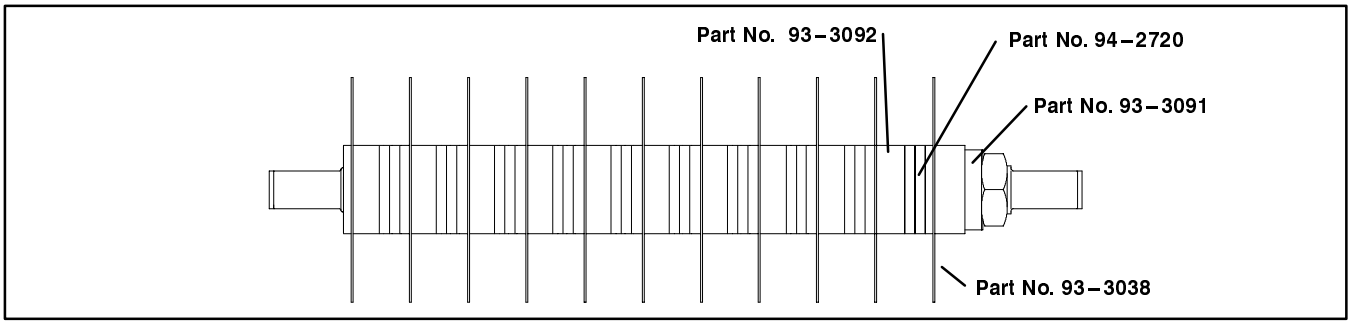

Figure 16

The Toro General Commercial Products Warranty

A Two-Year Limited Warranty

Conditions and Products Covered

The Toro Company and its affiliate, Toro Warranty Company, pursuant to an agreement between them, jointly warrant your 1996 or newer Toro Commercial Product ("Product") purchased after January 1, 1997, to be free from defects in materials or workmanship for two years or 1500 operational hours*, whichever occurs first. Where a warrantable condition exists, we will repair the Product at no cost to you including diagnosis, labor, parts, and transportation. This warranty begins on the date the Product is delivered to the original retail purchaser.

* Product equipped with hour meter

Instructions for Obtaining Warranty Service

You are responsible for notifying the Commercial Products Distributor or Authorized Commercial Products Dealer from whom you purchased the Product as soon as you believe a warrantable condition exists.

If you need help locating a Commercial Products Distributor or Authorized Dealer, or if you have questions regarding your warranty rights or responsibilities, you may contact us at:

Toro Commercial Products Service Department
Toro Warranty Company
8111 Lyndale Avenue South
Bloomington, MN 55420-1196
612-888-8801
800-982-2740
E-mail: commercial.service@toro.com

Owner Responsibilities

As the Product owner, you are responsible for required maintenance and adjustments stated in your operator's manual. Failure to perform required maintenance and adjustments can be grounds for disallowing a warranty claim.

Items and Conditions Not Covered

Not all product failures or malfunctions that occur during the warranty period are defects in materials or workmanship. This express warranty does not cover:

- Product failures which result from the use of non-Toro replacement parts, or from installation and use of add-on, modified, or unapproved accessories.
- Product failures which result from failure to perform required maintenance and/or adjustments.
- Product failures which result from operating the Product in an abusive, negligent or reckless manner.
- Parts subject to consumption through use unless found to be defective. Examples of parts which are consumed, or used up, during normal Product operation include, but are not limited to, blades, reels, bedknives, tines, spark plugs, castor wheels, tires, filters, belts, etc.
- Failures caused by outside influence. Items considered to be outside influence include, but are not limited to, weather, storage practices, contamination, use of unapproved coolants, lubricants, additives, or chemicals, etc.
- Normal "wear and tear" items. Normal "wear and tear" includes, but is not limited to, damage to seats due to wear or abrasion, worn painted surfaces, scratched decals or windows, etc.

Parts

Parts scheduled for replacement as required maintenance are warranted for the period of time up to the scheduled replacement time for that part.

Parts replaced under this warranty become the property of Toro. Toro will make the final decision whether to repair any existing part or assembly or replace it. Toro may use factory remanufactured parts rather than new parts for some warranty repairs.

General Conditions

Repair by an Authorized Toro Distributor or Dealer is your sole remedy under this warranty.

Neither The Toro Company nor Toro Warranty Company is liable for indirect, incidental or consequential damages in connection with the use of the Toro Products covered by this warranty, including any cost or expense of providing substitute equipment or service during reasonable periods of malfunction or non-use pending completion of repairs under this warranty. Except for the Emissions warranty referenced below, if applicable, there is no other express warranty. All implied warranties of merchantability and fitness for use are limited to the duration of this express warranty.

Some states do not allow exclusions of incidental or consequential damages, or limitations on how long an implied warranty lasts, so the above exclusions and limitations may not apply to you.

This warranty gives you specific legal rights, and you may also have other rights which vary from state to state.

Note regarding engine warranty: The Emissions Control System on your Product may be covered by a separate warranty meeting requirements established by the U.S. Environmental Protection Agency (EPA) and/or the California Air Resources Board (CARB). The hour limitations set forth above do not apply to the Emissions Control System Warranty. Refer to the Engine Emission Control Warranty Statement printed in your operator's manual or contained in the engine manufacturer's documentation for details.

Countries Other than the United States or Canada

Customers who have purchased Toro products exported from the United States or Canada should contact their Toro Distributor (Dealer) to obtain guarantee policies for your country, province, or state. If for any reason you are dissatisfied with your Distributor's service or have difficulty obtaining guarantee information, contact the Toro importer. If all other remedies fail, you may contact us at Toro Warranty Company.

Rev. 12/09/1999