Form No. 3325-356

TORO®

5, 7, and 11 Blade Cutting Units

Reelmaster 450-D and 4500-D

Model No. 03752—210000001 and Up
Model No. 03753—210000001 and Up
Model No. 03754—210000001 and Up
Model No. 07356—210000001 and Up
Model No. 03741—210000001 and Up
Model No. 03751—210000001 and Up

Operator's Manual

Domestic English (EN)

Contents

	Page
Introduction	2
Safety	3
Safety and Instruction Decals	3
Specifications	3
General Specifications	3
Optional Accessories	4
Assembly	4
Loose Parts	4
Installing the Tipper Plates and Weights to the Cutting Units	5
Installing the Floatation Kit	6
Installing the Fixed Head Kit	6
Securing the Cutting Units to the Lift Arms	6
Mounting the #4 and #5 Tipper Brackets	7
Mount the Roller Bumpers (Floatation Kit Only)	7
Mounting the Hydraulic Motors to the Cutting Units	8
Adjusting the Reel to Bedknife Contact	9
Adjusting the Height-of-Cut for a Floating Cutting Unit	9
Quick Method for Changing Height-of-Cut after Initial Setup of a Floating Cutting Unit	11
Checking/Adjusting the Cutting Unit Attitude	12
Height-of-Cut Adjustment for a Fixed Cutting Unit	13
Adjusting the Skids and Front Roller (Fixed Head Kit)	13
Maintenance	13
Lubrication	13
Backlapping	14
Servicing the Bedknife/Bedbar	15
Servicing the Reel Assembly	16
Removing the Roller	18
Installing the Roller	19
The Toro Total Coverage Guarantee	20

Introduction

Read this manual carefully to learn how to operate and maintain your product properly. The information in this manual can help you and others avoid injury and product damage. Although Toro designs and produces safe products, you are responsible for operating the product properly and safely.

Whenever you need service, genuine Toro parts, or additional information, contact an Authorized Service Dealer or Toro Customer Service and have the model and serial numbers of your product ready. They are located on the reel sideplate opposite the drive housing.

Write the product model and serial numbers in the space below:

Model No. _____

Serial No. _____

This manual identifies potential hazards and has special safety messages that help you and others avoid personal injury and even death. ***Danger***, ***Warning***, and ***Caution*** are signal words used to identify the level of hazard. However, regardless of the hazard, be extremely careful.

Danger signals an extreme hazard that *will* cause serious injury or death if you do not follow the recommended precautions.

Warning signals a hazard that *may* cause serious injury or death if you do not follow the recommended precautions.

Caution signals a hazard that may cause minor or moderate injury if you do not follow the recommended precautions.

This manual uses two other words to highlight information. **Important** calls attention to special mechanical information and **Note:** emphasizes general information worthy of special attention.

© 2000 by The Toro Company

8111 Lyndale Avenue South
Bloomington, MN 55420-1196

All Rights Reserved

Printed in the USA

Safety

Safety and Instruction Decals

Safety decals and instructions are easily visible to the operator and are located near any area of potential danger. Replace any decal that is damaged or lost.



Part No. 67-7960

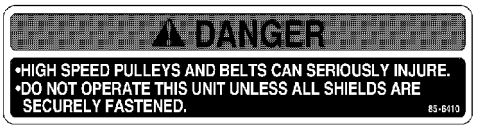

Part No. 85-6410



Part No. 93-6688 (for CE)

1. Danger—read the operator's manual before performing maintenance.
2. Cutting hazard to hands, fingers, and feet—stop the engine before going near rotating reels.

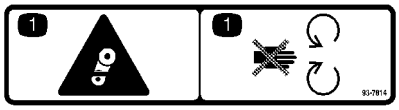

Part No. 93-7814 (for CE)

1. Entanglement hazard—stay away from moving parts.

Specifications

General Specifications

Height-of-cut	5 Blade—1 to 3 in. (25 to 76 mm) 7 Blade—1/2 to 1-3/4 in. (9.5 to 45 mm) 11 Blade—3/8 to 3/4 in. (9.5 to 19 mm)
Height-of-cut adjustment	Quick adjustment and positive locking is provided by locking type cone nuts. Gauge marks of 1/4 in. (6.3 mm) are provided as a reference for easy changes of height-of-cut.
Clip (variable to match cutting conditions)	5 Blade Cutting Unit: .176 in. per mph (.352 in. at 2 MPH–1.32 in. at 7.5 mph) 7 Blade Cutting Unit : .126 in. per mph (.252 in. at 2 MPH–.945 in. at 7.5 mph) 11 Blade Cutting Unit: .080 in. per mph (.16 in. at 2 MPH–.600 in. at 7.5mph)

Optional Accessories

Floatation Kit (1 per machine)	Model No. 03760
Fixed Head Kit (1 per machine)	Model No. 03762
Wiehle Roller Kit (1 per machine)	Model No. 03740
Side Skid Kit (1 per machine)	Model No. 03744
Full Roller Kit (1 per machine)	Model No. 03742
Dethatching Unit, RH (3 per machine)	Model No. 03732
Dethatching Unit, LH (2 per machine)	Model No. 03730
Rear Roller Scraper Kit (1 per cutting unit)	Part No. 59-6090
Front Full Roller Scraper Kit (1 per cutting unit)	Part No. 62-6220

Note: The front roller or other optional accessories for the front of the cutting unit are shipped separately. Use the instructions and parts supplied with the selected options for installation on the cutting unit.

Assembly

Note: Determine the left and right sides of the machine from the normal operating position.

Loose Parts

Note: Use this chart as a checklist to ensure that all parts have been received. Without these parts, total setup cannot be completed.

Description	Qty.	Use
Decals	2	Affix to cutting unit for CE.
Operator's manual	1	Read before operating.
Parts catalog	1	
Registration card	1	Fill out and return to Toro.

The following parts are required to mount the cutting units:

- 3 Right-Hand Cutting Units
- 2 Left-Hand Cutting Units
- 1 Front Roller or Skid Kit
- 1 Floatation Kit (includes 3 Weights, 1 Backlapping Brush, and 1 Gauge Bar) or
- 1 Fixed Head Kit (includes 3 Weights and 1 Backlapping Brush)

Important Thoroughly read both Cutting Unit and Traction Unit Operator Manuals. Failure to do so may result in damage to the cutting unit and/or poor performance.

Caution

If you leave the key in the ignition switch, someone could accidently start the engine and seriously injure you or other bystanders.

Remove the key from the ignition before installing, servicing, or making adjustments to the cutting units.

Installing the Tipper Plates and Weights to the Cutting Units

1. Refer to Figure 1 and layout all five cutting units on the floor in front of the machine. Position 3 right-hand cutting units (all three are alike) as #1, #3 and #5. Position the left-hand #2 and #4 cutting units also (both are alike).

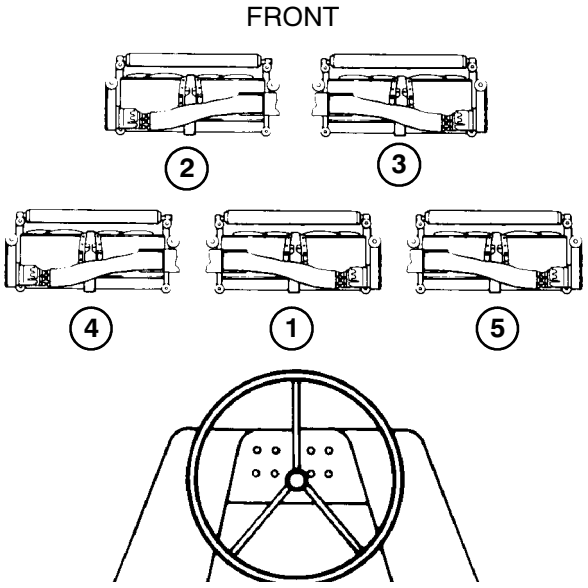

Figure 1

Cutting Unit Layout

2. Install a front roller or skid kit to each cutting unit. Installation instructions and cutting unit guards are included with each kit.

3. On the #2 and #3 cutting units, remove 4 cover capscrews located at the outside end of the cutting unit drive housing. Discard cover screws. Mount a tipper plate to front left-hand (#2) cutting unit and the front right-hand (#3) cutting unit using flathead socket screws and locknuts supplied with tipper plates (Fig. 2).

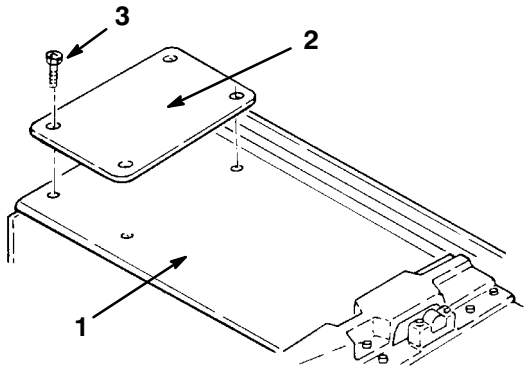

Figure 2

1. Inboard cutting unit cover
2. Tipper plate
3. Flathead socket capscrew

Note: Do not install a tipper plate on the #1 cutting unit.

4. Mount one weight to each cutting unit guard (Fig. 3) on the #1, #2 and #3 cuttings. Weights are located at the opposite end of each cutting unit drive housing. Use 1/2 in. carriage bolts provided with weights (Fig. 3).

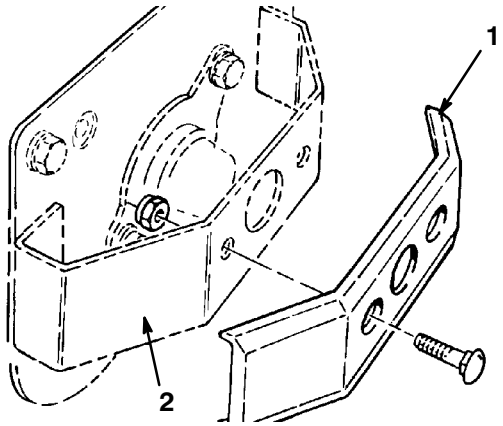

Figure 3

1. Weight
2. Guard

5. On the #4 and #5 cutting units, remove 4 cover capscrews located at the outside end of the cutting unit drive housing. Discard cover screws. Tipper brackets will be mounted at these locations after the #4 and #5 cutting units are mounted on lift arms (Fig. 2).

Installing the Floatation Kit

Mount a Flotation Kit Assembly (Fig. 4) to each cutting unit with U-bolts, lock washers and nuts supplied with kits. Male end of floatation assembly to be positioned forward. Tighten U-bolts evenly.

Caution

Fingers can be pinched in the floatation u-joint.

Keep hands and fingers away from the u-joint.

Note: When installing floating head assembly to cutting unit, make sure flap on bottom of assembly is positioned to the inside of the cutting frame tubes (Fig. 4, inset).

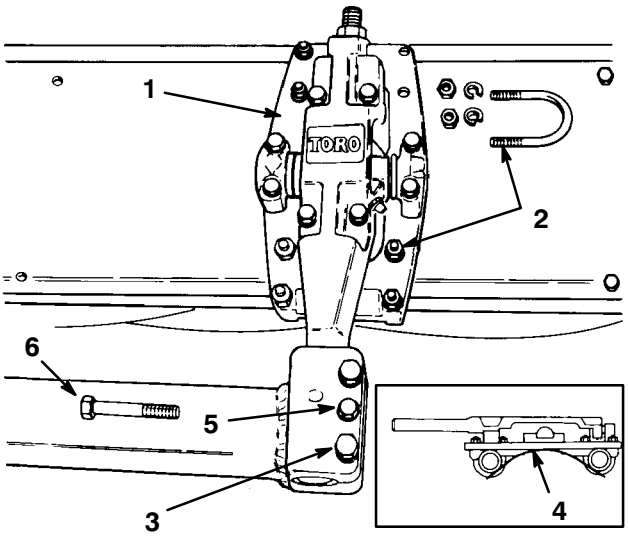

Figure 4

1. Floatation kit assembly
2. U-bolts
3. Lift arm bolts
4. Flap
5. Capscrew and jam nut
6. Capscrew

Installing the Fixed Head Kit

Note: Before mounting each fixed head assembly to cutting unit, insert the pivot arm of assembly into the appropriate lift arm block, align mounting holes and determine how many thrust washers (if any) are required to fill gap between assembly body and lift arm block. Add required amount of washers to pivot arm before installing fixed head assembly to lift arm.

Mount a Fixed Head Kit Assembly (Fig. 5) to each cutting unit with a cover plate, attitude adjustment plate, U-bolts, lockwashers and nuts supplied with kits. Male end of floatation assembly to be positioned forward. Tighten U-bolts evenly.

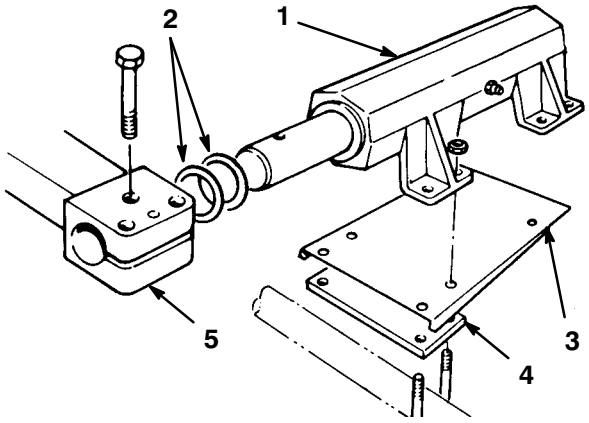

Figure 5

1. Fixed head assembly
2. Thrust washer (as required)
3. Cover plate
4. Attitude adjustment plate
5. Lift arm

Securing the Cutting Units to the Lift Arms

1. Remove three metric bolts from each of the lift arms (Fig. 5).

Note: The smaller diameter bolt goes through both the pivot arm and the lift arm. Keep these bolts separate.

2. With the parking brake on, start the traction unit and adjust the engine to half throttle. Be sure to release the lift arm lock lever for the #1, #2 and #3 cutting units and put the reel lift control for the #1, #2 and #3 cutting units in the lower position (Fig. 6). Release the lever and let it return to the neutral position.

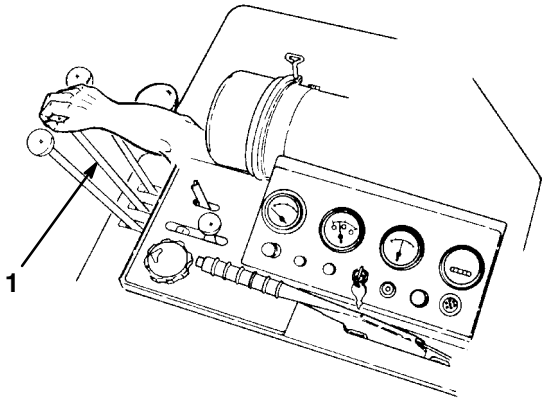

Figure 6

1. Reel lift control

Important Do not allow lever to snap back into the neutral position or the lift arms may not go into float.

3. Stop the traction unit and remove the key. Manually pull the lift arms, one at a time, to floor level. Repeat this procedure for the #4 and #5 cutting units.

Caution

Without the cutting units installed, restarting the engine will result in the lift arms raising.

4. Roll the appropriate cutting unit to lift arm and match the male end of pivot arm with hole in lift arm.

Note: It may be necessary to spread slotted block on lift arm slightly to slide pivot arm fully into hole.

5. Reinstall 3 lift arm bolts but do not tighten (Fig. 5).

Mounting the #4 and #5 Tipper Brackets

1. Loosely secure the hydraulic hoses to the underside of each tipper bracket with hose clamps, spacers, clamp plate, lock washers, and capscrew as shown in Figure 7.

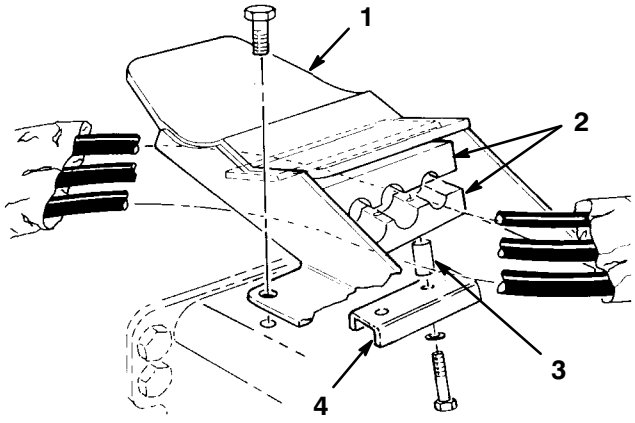

Figure 7

1. Tipper bracket
2. Hose clamp
3. Spacer
4. Clamp plate

2. Mount tipper brackets to cutting units with capscrews and locknuts.

Important Raise and lower each cutting unit to ensure that there is no binding of hoses during operation.

3. Tighten capscrews securing hose clamps to tipper brackets.

Mount the Roller Bumpers (Floatation Kit Only)

Note: Roller bumpers are required only when operating cutting units in the float position and front rollers are installed.

1. Locate mounting position of roller bumpers (Fig. 8) on each side of frame tube in front of #1 cutting unit.
2. Loosely secure a roller bumper to each side of frame tube, as shown in Figure 8, with U-bolts and locknuts.
3. Align the center of each bumper with the respective end of the roller on the #1 cutting unit and tighten the locknuts.

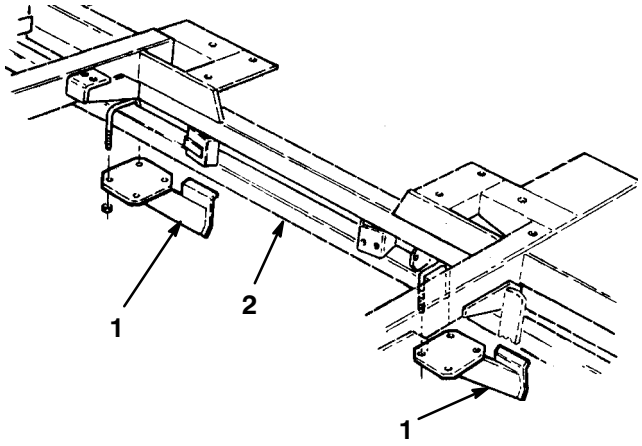

Figure 8

1. Roller bumpers
2. Frame tube

Mounting the Hydraulic Motors to the Cutting Units

1. Remove locknuts, bolts, shipping cover, and drive plate shield (Fig. 9) from the cutting unit.

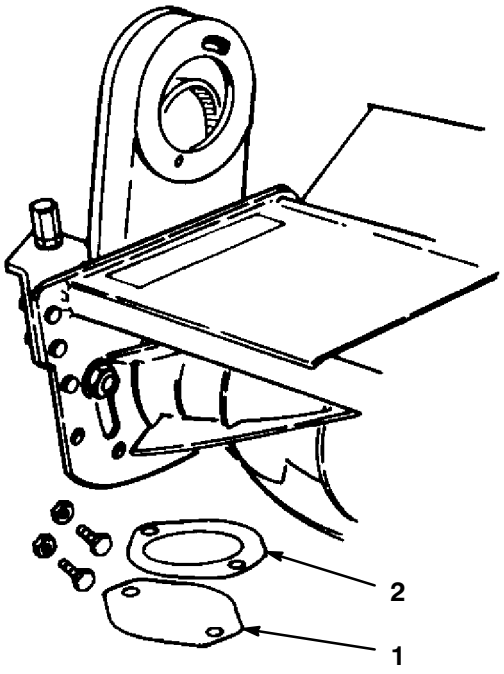

Figure 9

1. Shipping cover
2. Drive plate shield

2. Discard shipping cover and install the drive plate shield onto the reel drive motor flange (Fig. 10). Be sure the widest portion of the shield is at the top.

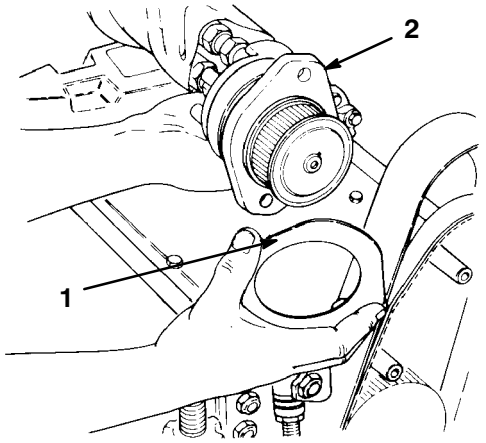

Figure 10

1. Drive plate shield
2. Reel drive motor flange

Note: Check to see that motor pulley set screws are tight on motor shaft before installing motor onto cutting unit (Fig. 11).

3. Insert the reel drive motor pulley through the housing and slip the cutting unit drive belt over the pulley (Fig. 11).

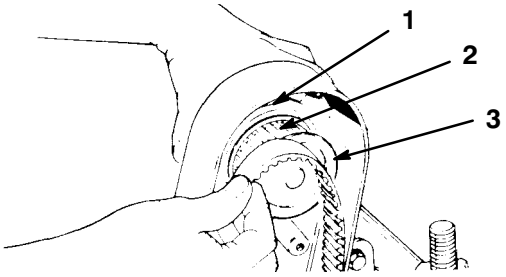

Figure 11

1. Hydraulic motor
2. Motor pulley
3. Drive belt

4. Insert the 2 reel drive motor mounting bolts (heads on inside of the drive housing—flat washer on top bolt) through the reel motor flange holes. Thread the locknuts onto the bolts. Rotate reel motor upward in the slotted hole in the housing to tension the drive belt and tighten the fasteners (Fig. 12) to approx. 25 ft. lb. (34 N-m).

Note: Proper belt tension is achieved when belt deflects approximately 1/8 in. (3 mm) at mid-point when 7 lb. of force is applied. (Fig. 12).

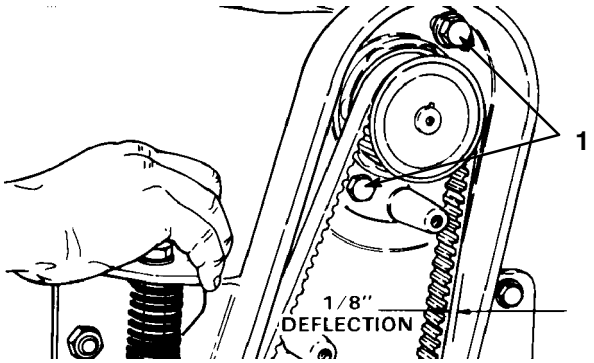

Figure 12

1. Reel motor fasteners

Important Rotate motors by hand only. Never place a bar between hose fittings on hydraulic motors—motor damage may result.

5. Install the gasket and drive housing cover after making sure the ends of the gasket are at the bottom of the housing to allow for drainage.

Important When hydraulic motors have been mounted to the cutting units, make sure hydraulic hoses lay flat and do not contact the frame of the machine when the cutting units are in the raised position. There should also be sufficient slack so hoses are above and not in contact with the floatation kit. If hoses appear twisted once the

hydraulic motors have been mounted and the belts tightened, loosen swivel nuts at the motor and reposition hoses. This can greatly increase the life of the hoses. With cutting units down, all cutting unit hoses should have a flat natural lay and be free from twist.

6. Tighten tipper bracket clamps on #4 and #5 cutting units (Fig. 7).

Note: Refer to the Traction Unit Operator's Manual for instructions on setting the adjustable hydraulic counterbalance, if so equipped.

Caution

Before adjusting reel to bedknife, raise and fully latch cutting units. Remove key from the ignition switch. Keep others off machine while adjusting cutting units.

Adjusting the Reel to Bedknife Contact

Before adjusting height-of-cut and each day before operating, check reel to bedknife contact, regardless if quality of cut had previously been acceptable.

Note: A 3/4 in. wrench is required for making the reel to bedknife adjustment.

1. Slowly and carefully rotate the reel, listening for light contact across the full length of the reel and bedknife.
2. If there is no contact, loosen the adjuster locking nut on each adjuster (Fig. 13). Then, equally turn each adjuster knob clockwise until light contact is felt and heard.

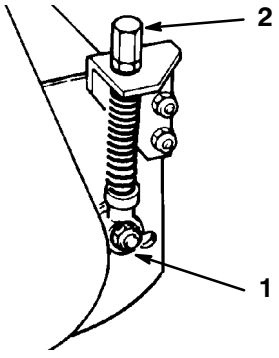

Figure 13

1. Adjuster locking nut
2. Adjustment knob

3. If there is excessive contact, turn the adjusting knobs counterclockwise until no contact is noticed. Then equally turn both adjusting knobs clockwise, until light contact is felt and heard between the reel and bedknife. Final adjustment should always be in the tightening (clockwise) direction.
4. Tighten adjuster locking nuts when completed making adjustments.

Caution

Sharp edges on the cutting units can cut or pinch hands or fingers.

- **When adjusting the cutting units, wear heavy gloves.**
- **Use care when turning the reels by hand.**

Important Adjusted correctly, the reel will cut paper (approx. .03 in. thick) across its entire length.

The cutting units will provide optimum mowing performance when adjusted and maintained correctly. Keeping a precise reel to bedknife adjustment (light contact), at each end of the cutting unit will produce a continual self-sharpening action. Therefore, sharp cutting edges are maintained, good quality of cut ensured, and the need for corrective re-sharpening reduced.

Important Cutting units with excessive contact between the reel and bedknife are noisy, consume excessive power, shorten component life and result in overall poor performance. Light contact between the reel and bedknife, once the cutting unit is warmed up, provides optimum mowing performance and component life.

Adjusting the Height-of-Cut for a Floating Cutting Unit

Adjusting the Reel to Bedknife Contact

Adjust reel to bedknife contact on all cutting units. Refer to Adjusting the Reel to Bedknife Contact, page 9.

Leveling the Rear Roller to the Reel

1. Start engine and lower the cutting units onto a flat surface such as a piece of 3/4 in. or 1 in. plywood (at least 20 in. x 30 in. in size). Stop engine and remove key from switch. Lock cutting units in the fixed position, by loosening the jam nut on lockout pin (Fig. 14) and screwing pin into hole in pivot arm (Fig. 15). Tighten nut to secure lockout. Raise the front rollers up so they do not contact the flat surface.

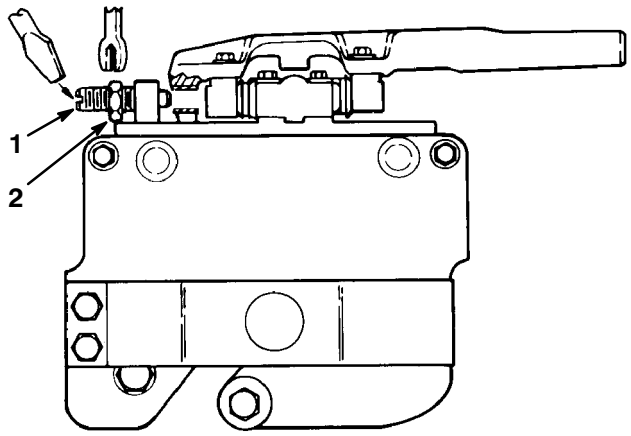

Figure 14

Cutting Unit Float Position

1. Lockout pin 2. Jam nut

2. Insert a piece of bar stock 25-28 in. (70 cm) long (Fig. 16), and approximately 3/8 in. (9.5 mm) thicker than the desired height-of-cut, under the reel and up against the bedknife cutting edge (Fig. 16). The reel (not bedknife) must contact the bar stock along its full length.

Note: Using a bar 3/8 in. (9.5 mm) thicker than height-of-cut provides proper bedknife attitude (heeled "up" in back) required for excellent low height-of-cut performance.

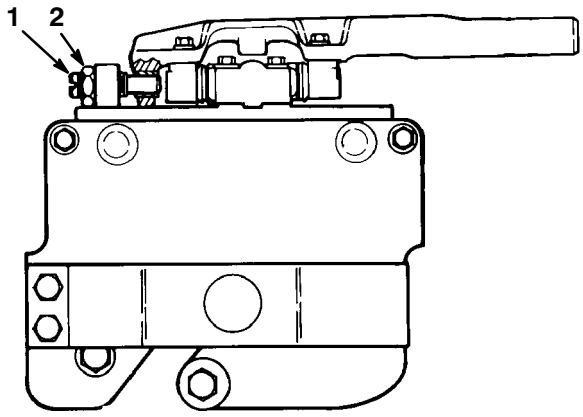

Figure 15

Cutting Unit Fixed Position

1. Lockout pin 2. Jam nut

3. Loosen rear roller jam nuts and adjusting knobs and push roller down against flat surface. At this point the reel should be contacting the bar stock and the rear roller contacting the flat surface. Contact should exist along the entire length of the reel and rear roller. Tighten rear roller adjustment knobs and jam nuts. Recheck to be sure roller and reel are both still making contact after the jam nuts have been tightened. Check roller contact by trying to slide paper between the roller and the flat surface.

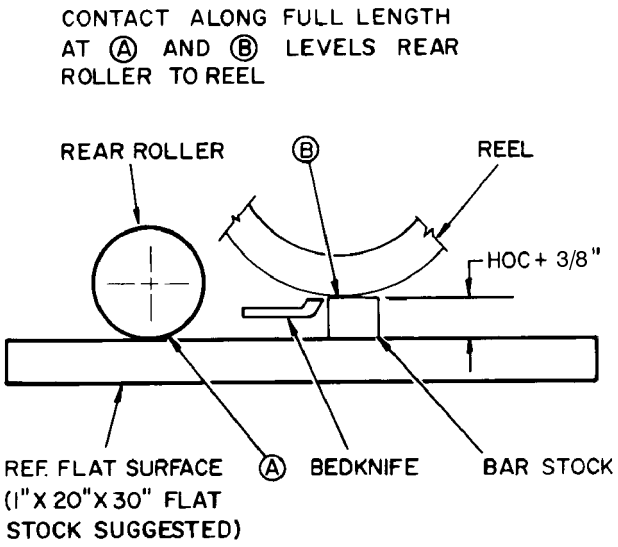

Figure 16

Leveling the Rear Roller to the Reel

4. Rear roller is now leveled to the reel.

Adjusting the Final Height-of-Cut Using the Gauge Bar

1. Raise cutting units and lock in the transport position. Shut off the engine and remove the key.
2. Use gauge bar (Toro Part No. 98-1852) to set final height-of-cut by adjusting front roller only.

Note: Position long cone nut (Fig. 17) on bottom for heights of 1-1/4 in. or higher. Position short cone nut on bottom for heights of below 1-1/4 in.

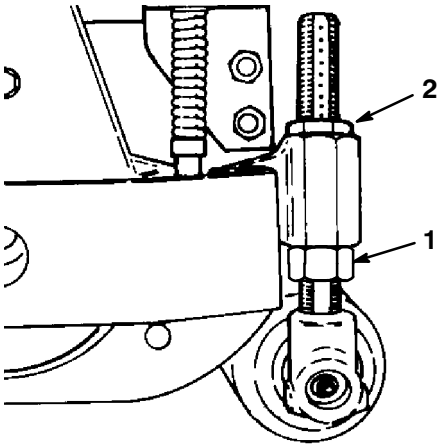

Figure 17

1. Long cone nut
2. Short cone nut

3. Loosen the gauge bar jam nut and adjust the first screw to set dimension between underside of screw head and gauge bar for desired height-of-cut. (Fig. 18). Tighten the jam nut to secure the adjustment. Hook screw head over cutting edge of bedknife and position bar against bottom of front roller (Fig. 19).

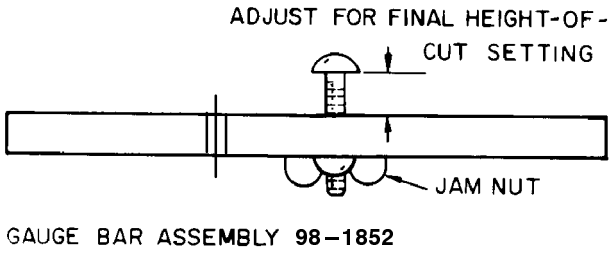

Figure 18

Gauge Bar Assembly

4. Loosen front roller nuts and adjust both ends of the front roller until it contacts gauge bar at both ends. With the gauge bar held firmly against the bottom of the rollers, adjust the front roller so the screw head just slips over the lip of the bedknife (Fig. 19). Tighten the front roller nuts.

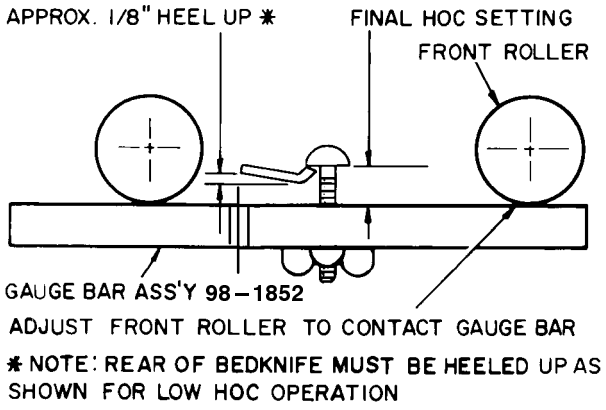

Figure 19

Final Height-of-Cut Adjustment Using Gauge Bar

Important When set properly, the front and rear rollers will contact the gauge bar and the screw head will be snug over the bedknife cutting edge when checked at both ends of the reel.

5. Loosen lockout pin so cutting unit can float freely (Fig. 14).

Quick Method for Changing Height-of-Cut after Initial Setup of a Floating Cutting Unit

If the reel to bedknife adjustment has been set and the rear roller leveled to the reel, the cutting unit may be quickly changed from one height-of-cut to another by using the gauge bar (Part No. 98-1852) and adjusting the front roller only. In many cases, an entire machine can be done quickly by using the gauge bar to set the front roller of one cutting unit. The remaining cutting units can then be set by loosening their front roller jam nuts and turning each front roller adjustment knob the same number of turns and in the same direction as the first unit.

Checking/Adjusting the Cutting Unit Attitude

1. Place an angle indicator, Toro Part No. 99-3503, on the bedknife and record the bedknife angle (Fig. 20).

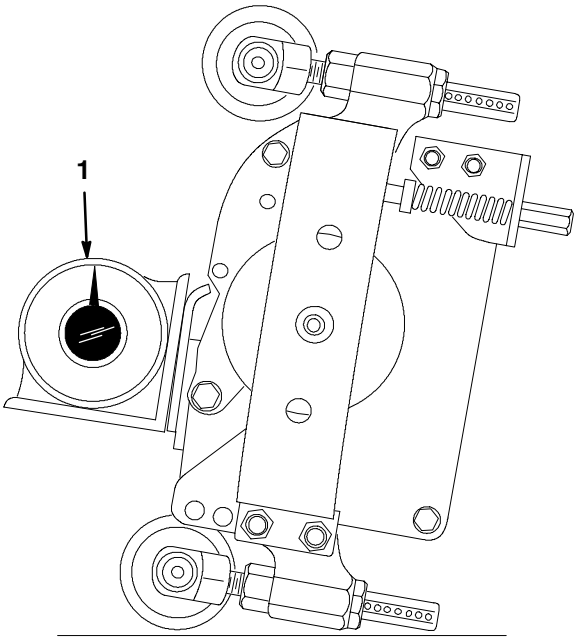

Figure 20

1. Bedknife angle

2. Using a two-screw gauge bar, Toro Part No. 98-1852, set the first screw to the desired height-of-cut.

3. Place the gauge bar across the front and rear rollers. The first screw head needs to fit snugly over the edge of the bedknife while the gauge bar contacts the rollers (Fig. 21).

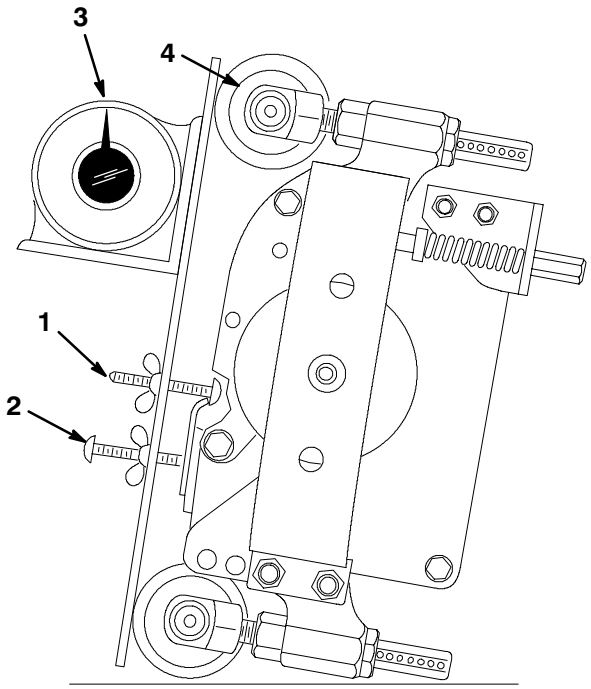

Figure 21

1. First screw
2. Second screw
3. Gauge bar angle
4. Front roller

4. Adjust the second screw to contact the bedknife.

5. Place an angle indicator on the gauge bar and record the gauge bar angle (Fig. 21).

6. Bedknife Angle (step 1) - Gauge Bar Angle (step 5) = Cutting Unit Attitude (degrees)

7. For adjusting the cutting unit attitude, adjust the second screw for the desired attitude, then repeat the height-of-cut adjustment for a floating cutting unit; refer to Leveling the Rear Roller to the Reel, page 9. Change the bar stock thickness for leveling the rear roller in order to accommodate your desired cutting unit attitude.

Height-of-Cut Adjustment for a Fixed Cutting Unit

1. Adjust reel to bedknife contact.
2. Loosen nuts securing skids or front roller and raise to highest position.
3. Loosen jam nuts securing rear roller. Lower roller beyond desired height-of-cut (ensures proper bedknife attitude).
4. Lower cutting unit onto a flat surface, such as a 1 in. x 20 in. x 30 in. piece of plywood. Shut off engine and remove the key.
5. Insert piece of bar stock (Fig. 16) 25-28 in. (70 cm) long with thickness equal to desired height-of-cut, under entire length of the reel, next to bedknife.
6. Adjust rear roller adjustment knobs and jam nuts until full length of the rear roller contacts the flat surface and the full length of the reel (not bedknife) contacts the bar stock. Tighten rear roller knobs and jam nuts.

Adjusting the Skids and Front Roller (Fixed Head Kit)

After skid kit or front rollers are installed (installation instructions are included with each option) make the following adjustments to prevent them from pushing down uncut grass or scalping on undulating terrain:

1. Lock each cutting unit in the fixed position (Refer to Cutting Unit Orientation, Fig. 15). Set the reel to bedknife adjustment and height-of-cut adjustment.
2. Position the cutting units on a flat, level surface (1 in. (25 mm) thick piece of plywood).
3. Skids and front rollers used to prevent scalping should not ride on the ground. Adjust each skid or front roller so it is 1/8-1/4 in. (3-6 mm) or higher above the level surface. Allow greater clearance at the higher height-of-cut settings.
4. Proper adjustment is achieved when the cutting unit does not scalp the grass in normal mowing conditions and yet is set high enough not to mar the turf and create undue wear on the skids or rollers.

Note: Skids are used only with the cutting unit in the fixed position. Front rollers may be used with the cutting unit in either the fixed or floating position.

Maintenance

Note: Determine the left and right sides of the machine from the normal operating position.

Lubrication

Before and after greasing, wipe each grease fitting with a clean rag. Use a hand-operated grease gun and #2 general purpose grease to lubricate the eight grease fittings. Applying too much pressure will ruin the seals and leaking grease could cause damage to grass.

Important Before washing the machine, shut off the engine and remove the key. Lubricate the reels and rollers immediately after washing the machine. This helps to minimize water entering the reel and roller bearings.

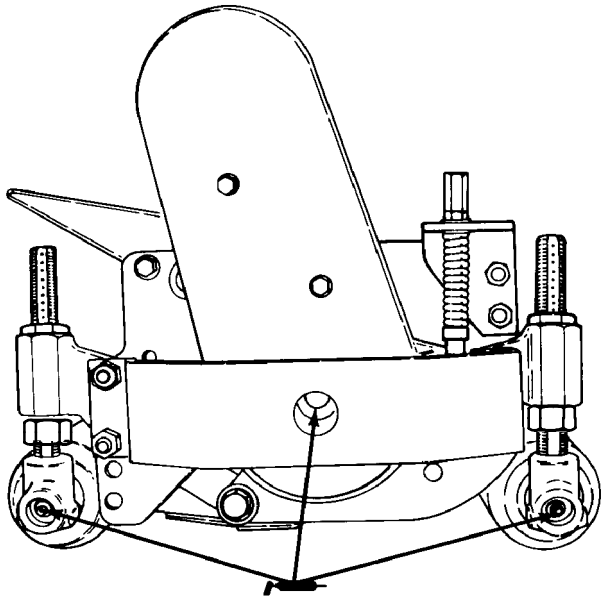

Figure 22

Important If the cutting units are washed in the raised position, be sure to lower them to the ground after washing. This allows water to drain from the ends of the rollers and reel bearing housings.

1. Lubricate the reel shaft and roller bearings with 3 or 4 pumps of grease. Daily lubrication of these fittings purges water and other contaminants, increasing service life and maintaining excellent quality-of-cut.

Note: When greasing roller bearings, grease forced from bearings will not be visible around the roller shaft.

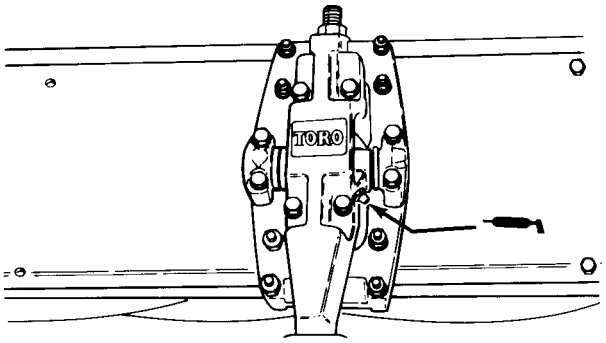

Figure 23

2. Lubricate the floatation kit pivots and fixed head kit pivots with one pump of grease weekly.

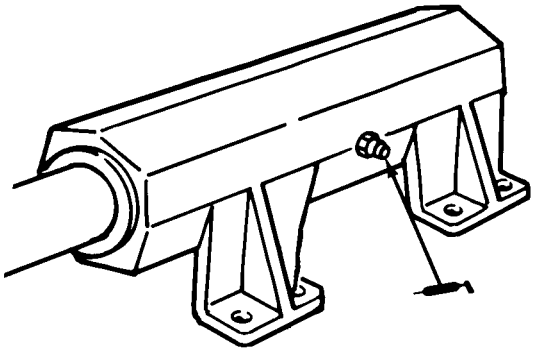

Figure 24

Backlapping

Danger

During the backlap operation the reels are under power. Contact with rotating reels can result in personal injury.

- **Do not adjust the cutting units while the engine and reels are operating.**
- **Instruct the operator to stop the reels and shut the engine off when an adjustment is necessary.**

Use a good grade of medium grit (80 courseness) lapping compound with a water soluble carrier so the compound will be easily washed away after completion of the operation. Dry lapping compound should be mixed with liquid detergent until it has a free-flowing consistency.

Two people are required to perform backlapping. Good communication between one another is necessary and caution should be used when making each move. With one person on the seat to operate the controls (operator) the other performs the backlapping operation. Note: Before starting the engine raise the grass deflector on the #1 cutting unit (center) and tighten fasteners to retain the deflector in the raised position.

Operator Duties

1. Sit on the seat and engage parking brake.
2. Turn reel speed knob counterclockwise to **slowest** (#1) position.
3. Start the engine and run at minimum throttle. Lower either:

- The center 3 cutting units (#1, 2 & 3) or
- Left-hand (#4) cutting unit or
- Right-hand (#5) cutting unit

The center 3 cutting units run and shut off together. With the #4 & #5 cutting units up and latched (automatically shut off) and the #1, #2 & #3 cutting units down, backlap the center (#1) cutting unit from the rear of the machine with the long handled brush. Backlap the #2 and #3 cutting units from the front of the machine.

4. Wait for second person's instruction to engage reels in **backlap** mode. Pull up on control lever and turn the **reel speed knob** counterclockwise to the **backlap** position.
5. Follow the second person's instructions. Be prepared to stop reels and engine quickly in case of an emergency.

Duties for Second Person

1. Instruct operator when to start and stop reels.

Danger

Contact with the reel or other moving parts can result in personal injury.

- **Stay away from the reel while backlapping.**
- **Never use a short handled paint brush to apply backlapping compound.**

2. Dip 3 in. (76 mm) paint brush attached to Toro Part No. 29-9200 Handle Assembly into lapping compound. Stand clear and instruct operator to engage reel into backlap mode.
3. Apply lapping compound evenly over full length of the reel, ensuring that all reel blades are covered. Whenever noise of reel against the bedknife begins to disappear or, an uneven concentration of material appears on the reel, redistribute the compound with the brush.

4. When it becomes necessary to adjust the reel to the bedknife, instruct the operator to disengage the reel, stop the engine and remove the key from the ignition switch. Then proceed with the adjustment only after the reels have stopped rotating.

5. Backlap each reel until the cutting edges are sharp, even, and consistent on all blades. Achieve a minimum of 1/32 in. (0.79 mm) land area on newly sharpened reel assemblies. Normally, a reel need only be backlapped for approximately 3 minutes.

6. Upon completion, stop the reel and turn off the engine. Remove the key from the ignition switch. Wash the unit thoroughly with a low pressure stream of water to remove all lapping material. Allow the reel to dry and lubricate the grease fittings.

7. Check sharpness of the reel and bedknife with strips of newspaper. With light reel to bedknife contact, the paper should be cleanly sheared across the entire width of the reel. If the paper is not sheared acceptably, continue backlapping.

8. After backlapping the #1, #2 and #3 cutting units, raise and latch these units and proceed with the #4 and #5 cutting units.

Note: See the Toro Sharpening Manual (Part No. 80-300) for additional backlapping/sharpening information.

Servicing the Bedknife/Bedbar

Note: The bedbar on each cutting unit has a precision ground mounting surface to provide an excellent fit with a bedknife. Backlapping of replacement bedknives is often sufficient to achieve an excellent cutting edge with minimum material removed.

Removing the Bedknife/Bedbar

1. Remove the shoulder bolts, bushings, and spacers from each end of the unit and remove the bedbar/bedknife assembly (Fig. 25).

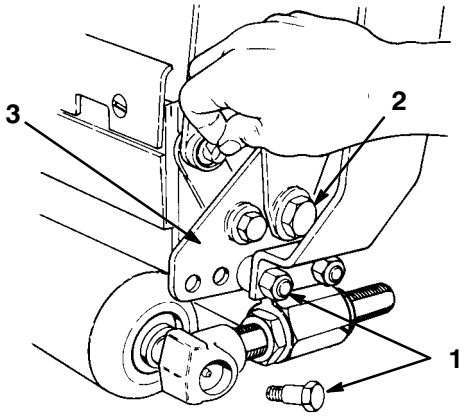

Figure 25

1. Shoulder bolts (2 each side)
2. Bushing
3. Spacer

2. Remove the mounting screws for the bedknife and separate the bedknife from the bar (Fig. 26). Discard the screws.

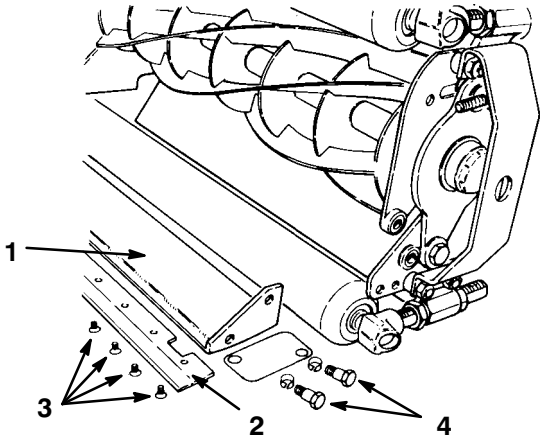

Figure 26

1. Bedbar
2. Bedknife
3. Bedknife mounting screws
4. Bedknife mounting components

Installing the Bedknife/Bedbar

1. Thoroughly clean the bedknife mounting face on the bedbar of all rust and scale. Remove any material on the mounting face of the bedbar that will affect a good match-up with the bedknife.
2. Before installation, apply a coating of Never Seez, or any material that will ease future disassembly of the bedknife mounting screws to the threads before installation.
3. Use a torque wrench and Part No. 51-0880 special tool to finish tightening the screws (Fig. 27). Torque the screws to 250 in.-lb. (28 Kgm) beginning with the center screw and tightening alternate screws toward each end to ensure that the bedknife will be flat against the bedbar.
4. Install the bedbar/bedknife assembly to the cutting unit.

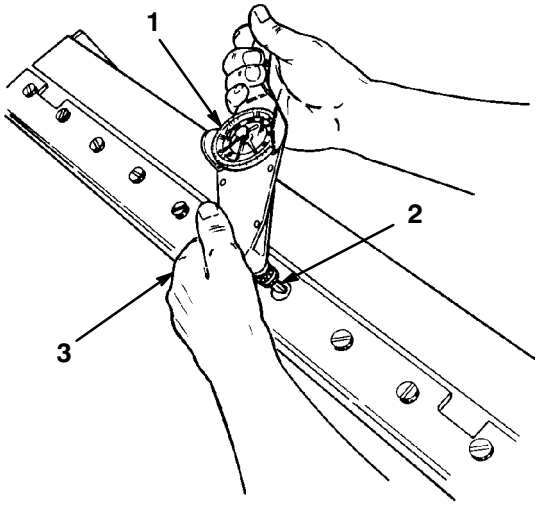

Figure 27

1. Torque wrench
2. Tool—Toro Part No. 51-0880
3. Torque from center out

Servicing the Reel Assembly

Removing the Reel Assembly

1. Remove the guards from each end of the cutting unit and the front and rear roller assemblies (Fig. 28).

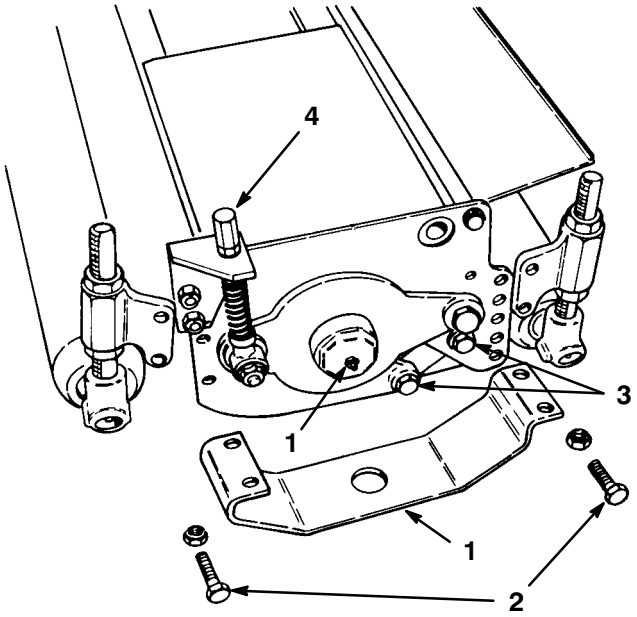

Figure 28

1. Guard
2. Mounting fasteners
3. Bedbar mounting assembly
4. Adjusting assembly
5. Dust cap

2. Remove the shoulder bolts, bushings, and spacers from each end of the unit and remove the bedbar/bedknife assembly (Fig. 29).
3. Remove the inboard locknut from the adjuster pin, the fasteners for the bracket, and the adjusting handle assembly from the sideplate (Fig. 29).

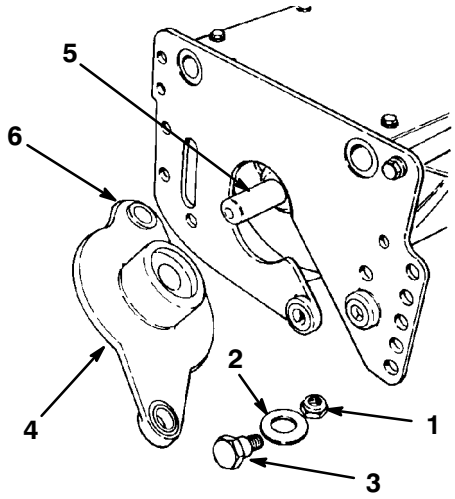

Figure 29

1. Locknut
2. Belleville washer
3. Shoulder bolt
4. Bearing housing
5. Reel shaft
6. Flange bushings

4. Disassemble the cone nut from the shoulder bolt securing the bearing housing to the sideplate, remove the Belleville washer and bolt, and slide the bearing housing off of the reel shaft (Fig. 30).

5. Remove the cover from the drive housing and remove the drive belt from the housing (Fig. 30).

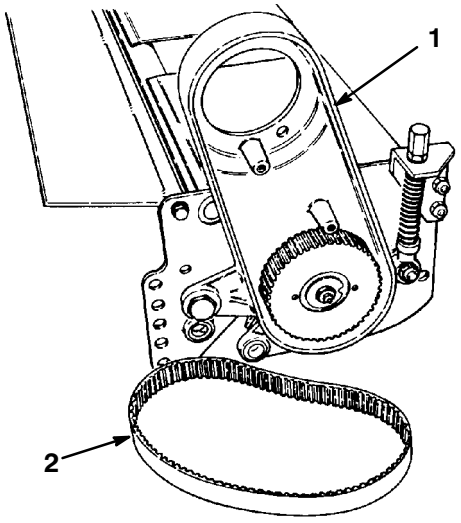

Figure 30

1. Drive housing (cover removed)
2. Drive Belt

6. Remove the reel capscrew, toothed washer, and pulley washer from the reel shaft (Fig. 31).

Note: The capscrew is assembled with a thread locking compound.

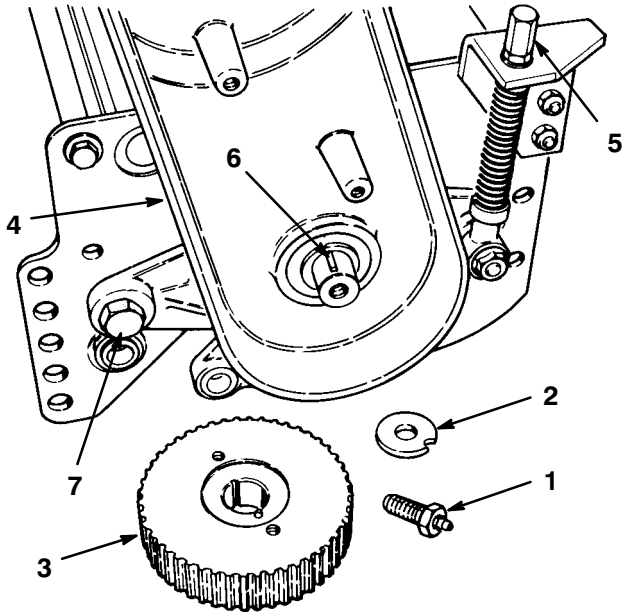

Figure 31

1. Reel capscrew
2. Pulley washer
3. Driven pulley
4. Drive housing
5. Adjusting handle assembly
6. Woodruff key
7. Drive housing fasteners

7. Using a puller, remove the driven pulley from the reel shaft (Fig. 31). Remove the woodruff key from the reel shaft.

8. Remove the adjustment assembly and cone nut, Belleville washer, and shoulder bolt securing the housing to the sideplate (Fig. 31). Remove the housing.

9. Slide the reel assembly out of the slots in the sideplates.

10. To remove the bearing and seals from the drive housing, remove the retaining ring from the inside of the housing. Pry the outer seal out of the belt drive case side. Press the bearing and rear seal out from the outer side of the housing.

11. To remove the bearing and seal from the bearing housing, remove the dust cap (Fig. 28) and press the bearing and seal out of the housing.

Installing the Reel Assembly

1. Inspect the flange bushings in the mounting holes for the drive housing and bearing housing for wear (Fig. 29). Replace, if necessary.
2. Assemble the outer seal (lip facing in to retain grease) into the drive housing using Loctite 242 retaining compound on the outer diameter. Apply a light coat of oil to the seal lips and insert the bearing assembly through the seal from the opposite side (Fig. 32).

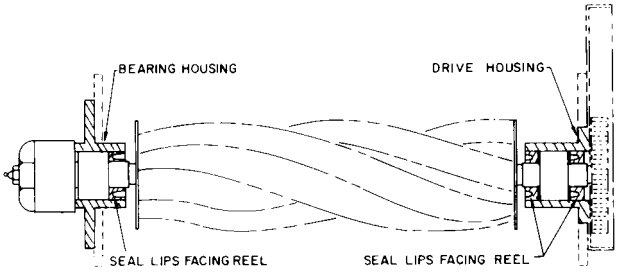

Figure 32

3. Apply a light coating of oil to the inner seal lips and install (lip facing away from the bearing and toward the reel) in the housing. Install the retaining ring to secure the assembly in the housing (Fig. 32).
4. Apply a light coat of oil to the seal lips of the seal for the bearing housing and install (lip facing away from the bearing) over the bearing assembly (Fig. 32).
5. Insert the bearing and seal in the housing and install the dust cap into the housing.
6. Assemble the reel assembly to the frame. Ensure the shield washer is installed on the drive housing end of the reel shaft. Align the drive pin on reel shaft with the slot in the bearing and slide the drive housing onto the shaft.
7. Insert the shoulder bolt through the Belleville washer and rear housing mounting hole. Slide the bolt through the sideplate mounting hole (Fig. 29). Install the cone nut locknut onto the bolt. Tighten the cone nut to 45-55 ft.-lb.
8. Align the drive pin on the reel shaft with the notch in the bearing inner race and slide the bearing housing over the opposite end of the reel shaft. Insert the shoulder bolt and Belleville washer through the rear bearing housing mounting hole. Slide the bolt through the sideplate mounting hole. Install the cone onto the bolt. Tighten the cone nut to 45-55 ft.-lb.
9. Install the woodruff key in the drive housing end of the reel shaft and install the driven pulley onto the shaft.
10. Ensure the slot in the pulley washer is aligned with the roll pin in the pulley and install the washer, toothed washer, and reel capscrew (Fig. 31). Apply a medium strength thread locking compound to the reel capscrew during assembly. Torque the capscrew to 45-55 ft.-lb.
11. Install the reel adjustment assemblies to each sideplate. Install roll pins before tightening fasteners.
12. Install the bedbar/bedknife assembly.
13. Install the front and rear roller assemblies or skids.
14. Adjust the reel to the bedknife; refer to Adjusting the Reel to the Bedknife, page 9. Adjust the height-of-cut; refer to Adjusting the Height-of-Cut, page 9.

Removing the Roller

The roller assemblies can be removed by the following methods:

1. Remove the fasteners securing the guard and roller adjustment housing to the side plate (Fig. 33) or unscrew the upper cone nut and drop the threaded rod out of the adjustment housing (Fig. 34).

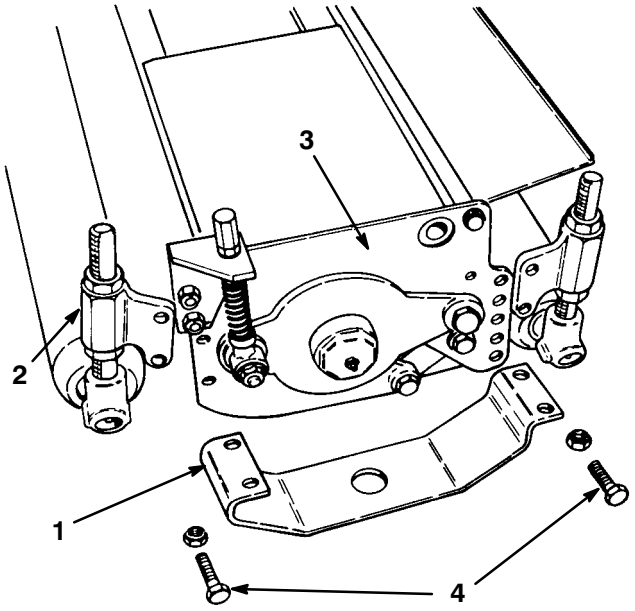

Figure 33

1. Guard
2. Roller adjusting housing
3. Sideplate
4. Mounting fasteners

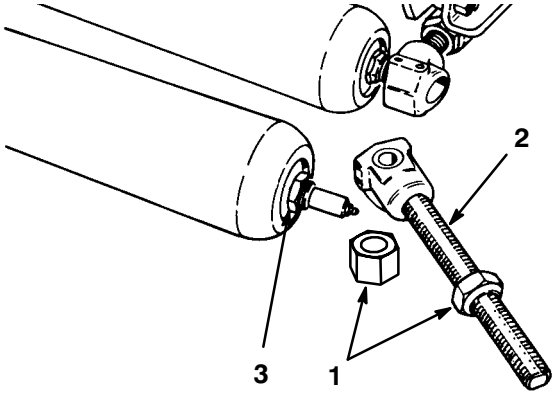

Figure 34

1. Cone nut
2. Rod and collar assembly
3. Flex locknut

2. The threaded rod and collar assembly can be removed from the roller by sliding it off the shaft at both ends (Fig. 34).

Installing the Roller

Important When assembling a new roller to the cutting unit, mount the roller so that the roller shaft locknut is on the right side of the cutting unit (Fig. 34) (as viewed by the operator sitting on the seat of the machine). This prevents the locknut from loosening during operation.

The Toro General Commercial Products Warranty

A Two-Year Limited Warranty

Conditions and Products Covered

The Toro Company and its affiliate, Toro Warranty Company, pursuant to an agreement between them, jointly warrant your 1996 or newer Toro Commercial Product ("Product") purchased after January 1, 1997, to be free from defects in materials or workmanship for two years or 1500 operational hours*, whichever occurs first. Where a warrantable condition exists, we will repair the Product at no cost to you including diagnosis, labor, parts, and transportation. This warranty begins on the date the Product is delivered to the original retail purchaser.

* Product equipped with hour meter

Instructions for Obtaining Warranty Service

You are responsible for notifying the Commercial Products Distributor or Authorized Commercial Products Dealer from whom you purchased the Product as soon as you believe a warrantable condition exists.

If you need help locating a Commercial Products Distributor or Authorized Dealer, or if you have questions regarding your warranty rights or responsibilities, you may contact us at:

Toro Commercial Products Service Department
Toro Warranty Company
8111 Lyndale Avenue South
Bloomington, MN 55420-1196
952-888-8801 or 800-982-2740
E-mail: commercial.service@toro.com

Owner Responsibilities

As the Product owner, you are responsible for required maintenance and adjustments stated in your operator's manual. Failure to perform required maintenance and adjustments can be grounds for disallowing a warranty claim.

Items and Conditions Not Covered

Not all product failures or malfunctions that occur during the warranty period are defects in materials or workmanship. This express warranty does not cover the following:

- Product failures which result from the use of non-Toro replacement parts, or from installation and use of add-on, modified, or unapproved accessories
- Product failures which result from failure to perform required maintenance and/or adjustments
- Product failures which result from operating the Product in an abusive, negligent or reckless manner
- Parts subject to consumption through use unless found to be defective. Examples of parts which are consumed, or used up, during normal Product operation include, but are not limited to, blades, reels, bedknives, tines, spark plugs, castor wheels, tires, filters, belts, etc.
- Failures caused by outside influence. Items considered to be outside influence include, but are not limited to, weather, storage practices, contamination, use of unapproved coolants, lubricants, additives, or chemicals, etc.
- Normal "wear and tear" items. Normal "wear and tear" includes, but is not limited to, damage to seats due to wear or abrasion, worn painted surfaces, scratched decals or windows, etc.

Parts

Parts scheduled for replacement as required maintenance are warranted for the period of time up to the scheduled replacement time for that part.

Parts replaced under this warranty become the property of Toro. Toro will make the final decision whether to repair any existing part or assembly or replace it. Toro may use factory remanufactured parts rather than new parts for some warranty repairs.

General Conditions

Repair by an Authorized Toro Distributor or Dealer is your sole remedy under this warranty.

Neither The Toro Company nor Toro Warranty Company is liable for indirect, incidental or consequential damages in connection with the use of the Toro Products covered by this warranty, including any cost or expense of providing substitute equipment or service during reasonable periods of malfunction or non-use pending completion of repairs under this warranty. Except for the Emissions warranty referenced below, if applicable, there is no other express warranty. All implied warranties of merchantability and fitness for use are limited to the duration of this express warranty.

Some states do not allow exclusions of incidental or consequential damages, or limitations on how long an implied warranty lasts, so the above exclusions and limitations may not apply to you.

This warranty gives you specific legal rights, and you may also have other rights which vary from state to state.

Note regarding engine warranty: The Emissions Control System on your Product may be covered by a separate warranty meeting requirements established by the U.S. Environmental Protection Agency (EPA) and/or the California Air Resources Board (CARB). The hour limitations set forth above do not apply to the Emissions Control System Warranty. Refer to the Engine Emission Control Warranty Statement printed in your operator's manual or contained in the engine manufacturer's documentation for details.

Countries Other than the United States or Canada

Customers who have purchased Toro products exported from the United States or Canada should contact their Toro Distributor (Dealer) to obtain guarantee policies for your country, province, or state. If for any reason you are dissatisfied with your Distributor's service or have difficulty obtaining guarantee information, contact the Toro importer. If all other remedies fail, you may contact us at Toro Warranty Company.

Part No. 374-0031 Rev. -