Form No. 3442-929 Rev A

TORO®

Count on it.

Parts Catalog

Workman® GTX EFI

Utility Vehicle

Model No. 07409—Serial No. 407600000 and Up

Register at www.Toro.com.
Original Instructions (EN)

3442-929 A

Ordering Replacement Parts

To order replacement parts, please supply the part number, the quantity, and the description of each part desired.

Understanding Reference Numbers

Each identified part in an illustration has a reference number. The reference number for a part also appears in the parts list, along with other information about the part.

This catalog uses two special reference number formats, one to indicate parts in a service assembly and another to indicate the quantity of a given part in an illustration.

Service Assembly Reference Numbers

Parts in service assemblies have reference numbers in the form a:b. The a represents the reference number of the entire service assembly and the b represents a sequential number unique to each part within the service assembly.

For example, a wheel assembly might be identified by reference number 6, the tire by 6:1, the valve by 6:2, and the wheel by 6:3. When you order the assembly identified by reference number 6, you receive all parts identified by reference numbers 6:1,6:2, and 6:3. However, you may also order any part individually. Reference numbers of this type appear in illustration and in parts lists.

Reference Numbers Indicating Quantity

In an illustration, if a reference number indicates more than one part, the reference number has the form nX y. The n represents the quantity of the part, the X is the multiplication symbol, and the y represents the reference number.

For example, in an illustration, the reference number 2X 37 means that two of the parts identified by reference number 37 are indicated.

Contents

Front Frame and Suspension Assembly . . . 4
Floor Plate and Rear Suspension Mount Assembly . . . 5
Rear Frame and Suspension Assembly . . . 6
Frame Mount and Rear Shock/Spring Assembly . . . 7
Brake Assembly . . . 8
Master Cylinder Assembly No. 104-6782 . . . 9
Brake Caliper Assembly No. 140-2575 . . . 10
Steering Assembly . . . 11
Pedal and Control Assembly . . . 12
Hood and Fender Assembly . . . 14
Dash Assembly . . . 15
Seatbase Assembly . . . 16
Cargo Bed Assembly . . . 17
Engine Assembly . . . 18
Engine Assembly No. 133-8092 . . . 20
Engine Assembly No. 133-8092 . . . 23
Starter Generator Assembly No. 131-8444 . . . 25
Secondary Clutch Assembly No. 119-6011 . . . 26
Air Cleaner Assembly No. 138-3447 . . . 27
Primary Clutch Assembly No. 138-0095 . . . 28
Rear Wheel and Transaxle Assembly . . . 29
Transaxle Assembly No. 131-3486 . . . 30
Battery and Cable Assembly . . . 32
Electrical Assembly . . . 33
Fuel System Assembly . . . 35
Attachments and Accessories . . . 37

© 2020—The Toro® Company
8111 Lyndale Avenue South
Bloomington, MN 55420

Contact us at www.Toro.com.
Printed in the USA.
All Rights Reserved

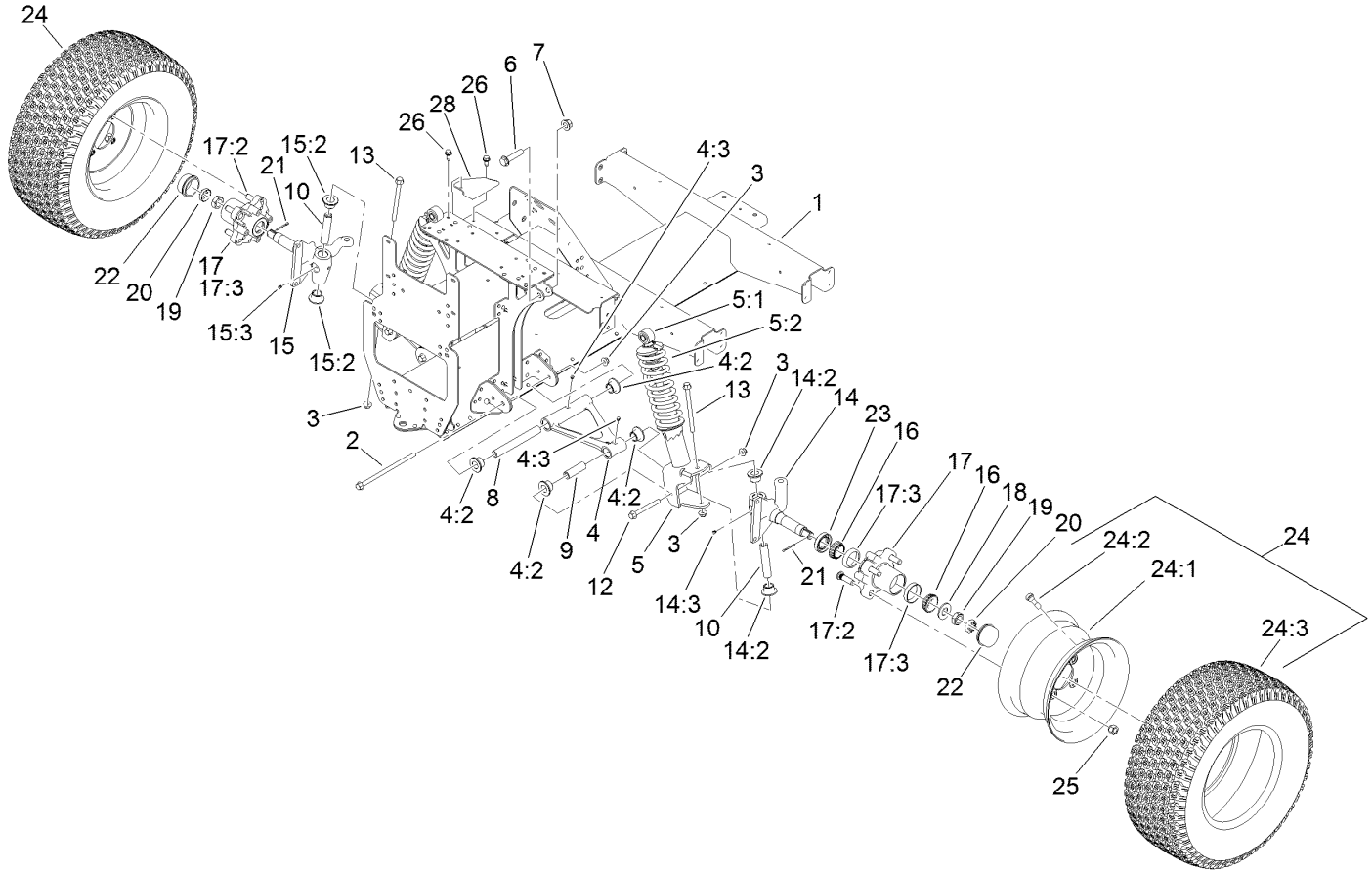

Front Frame and Suspension Assembly

Ref.	Part Number	Qty.	Description
1	127-7718-03	1	Frame-Front
2	139-3360	2	Screw-HF
3	139-3380	6	Nut-HF
4	144-2161	2	Control Arm ASM
4:2	140-4615	4	Bushing-Flange
4:3	144-2159	2	Plug-Taper Self Forming
5	139-4484	2	Strut ASM, 250 Lb (16.33" EXT Length)
5:1	131-8574	1	Isolator-Shock
5:2	137-6719	1	Spring-Compression, 250Lb
6	3234-46	2	Screw-HHF
7	99-5107	2	Nut-Lock
8	131-8581	2	Sleeve-Control Arm, Inner
9	131-8583	2	Sleeve-Control Arm, Outer
10	131-8582	2	Sleeve-Kingpin
12	139-3370	2	Screw-HF
13	139-3350	2	Screw-HF
14	144-2162	1	Spindle ASM, LH
14:2	140-4615	2	Bushing-Flange
14:3	144-2159	1	Plug-Taper Self Forming

Ref.	Part Number	Qty.	Description
15	144-2163	1	Spindle ASM, RH
15:2	140-4615	2	Bushing-Flange
15:3	144-2159	1	Plug-Taper Self Forming
16	254-94	4	Bearing-Cone, Tapered
17	127-8851	2	Front Hub ASM
17:2	10-6830	4	Stud-Type, Drive
17:3	254-72	2	Bearing-Cup, Tapered
18	93-0309	2	Washer-Tab
19	3220-7	2	Nut-Jam
20	93-0307	2	Nut-Lock, Retainer
21	3272-12	2	Pin-Cotter
22	241-119	2	Cap-Dust
23	112-1690	2	Seal-Oil
24	139-4495	2	Wheel And Tire ASM
24:1	131-8317	1	Wheel
24:2	232-27	1	Stem-Valve
24:3	139-4475	1	Tire-20 X 8.00-10
25	242-50	8	Nut-Lug
26	32144-70	2	Screw-HWHTF
28	131-8339-03	1	Reinforcement-Tower

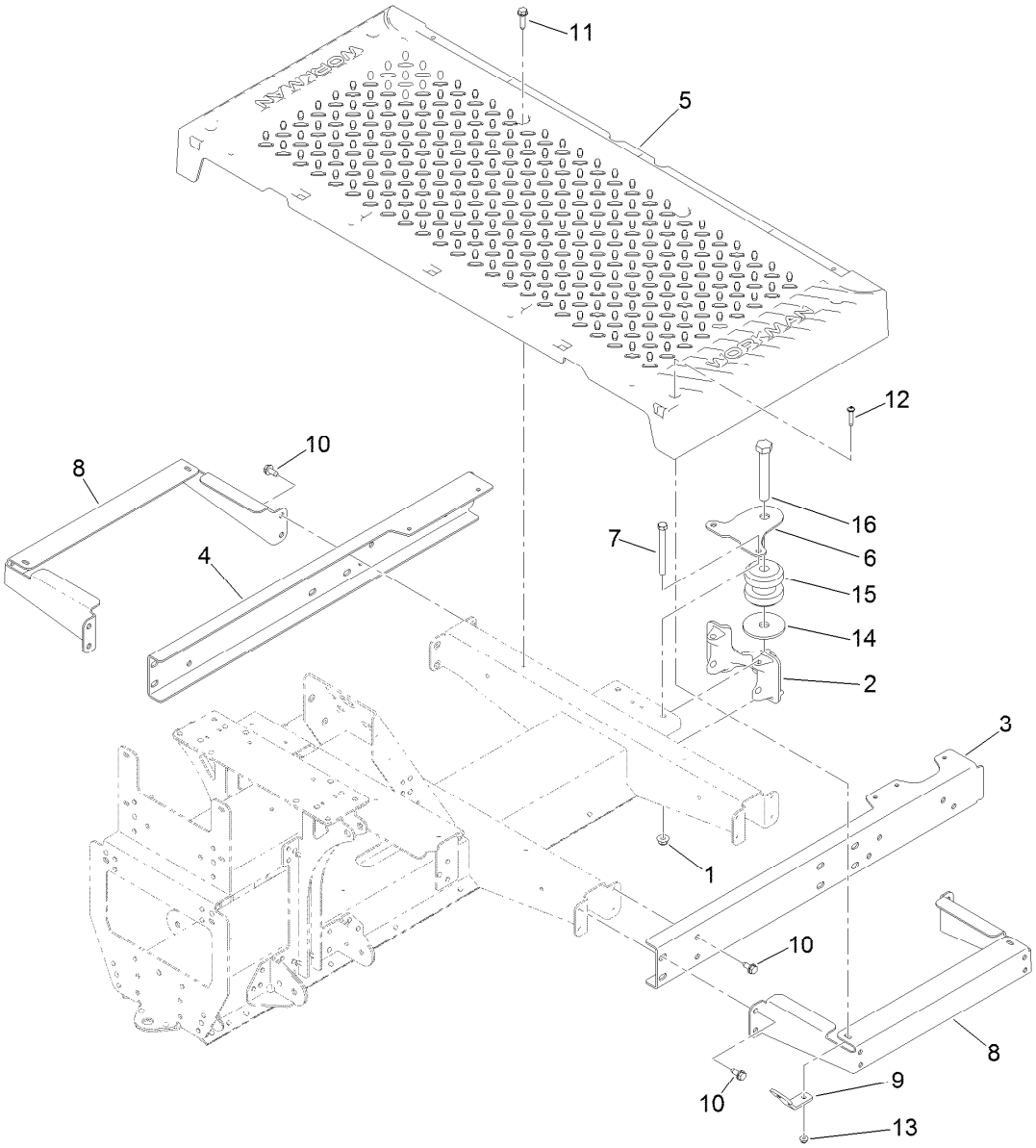

Floor Plate and Rear Suspension Mount Assembly

Ref.	Part Number	Qty.	Description
1	104-8301	2	Nut-HF, NI
2	131-8466	1	Mount-Suspension, Rear
3	127-7820-03	1	Channel-Frame, Front (LH)
4	127-7821-03	1	Channel-Frame, Front (RH)
5	127-7829	1	Plate-Floor
6	131-8597	1	Plate-Gimbal, Upper
7	323-42	2	Screw-HH
8	127-7837-03	2	Bracket-Support, Floor Plate

Ref.	Part Number	Qty.	Description
9	127-7832	2	Bracket-Angle
10	32144-70	16	Screw-HWHTF
11	32144-49	4	Screw-HWHTF
12	132-6777	4	Screw-TTH
13	104-7201	4	Nut-HF
14	110-4549	1	Washer-Snubbing
15	131-8480	1	Isolator
16	104-5877	1	Screw-HH

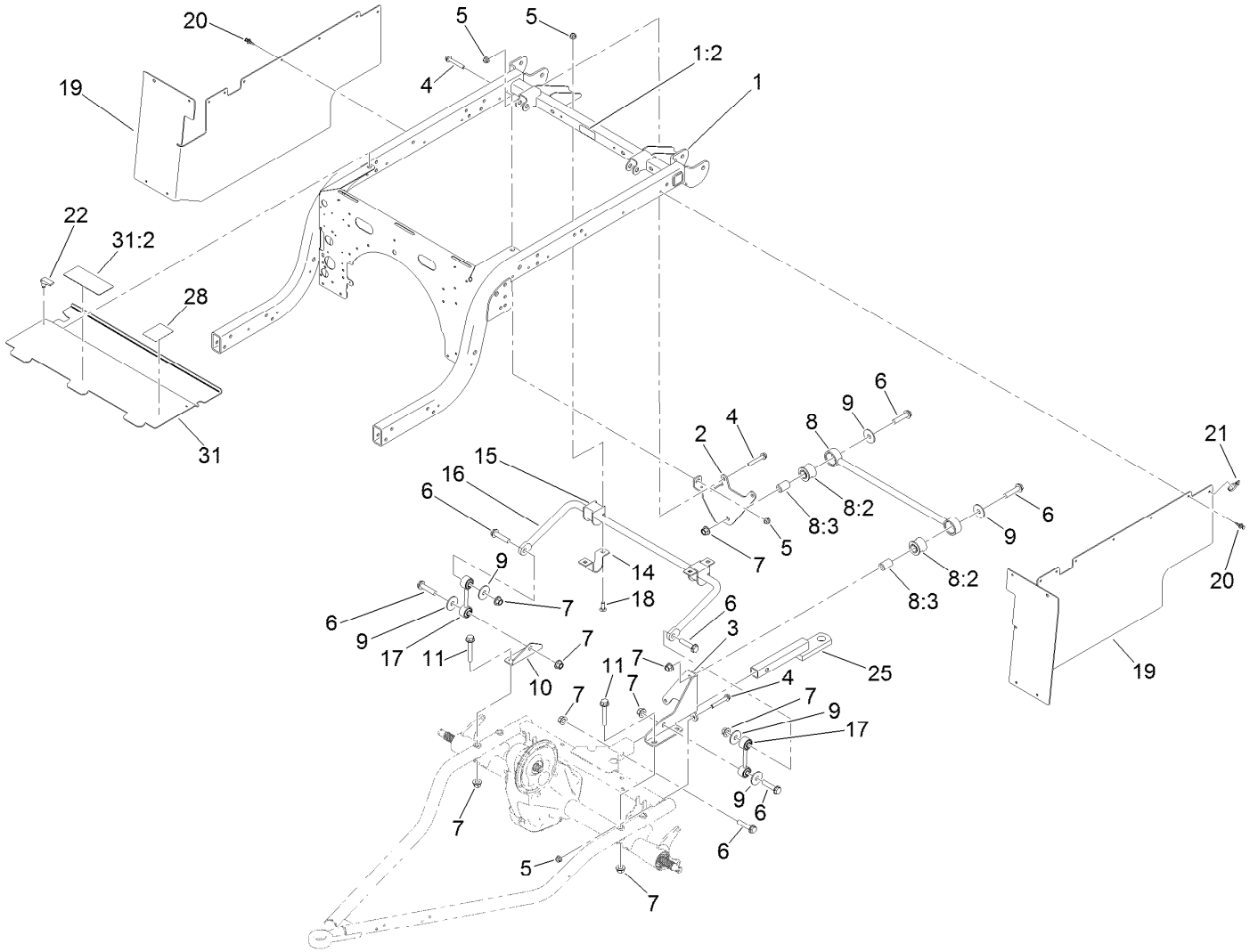

Rear Frame and Suspension Assembly

Ref.	Part Number	Qty.	Description
1	140-2498	1	Rear Frame ASM
1:2	115-2047	1	Decal-Surface, Hot
2	139-4647-03	1	Bracket-Stabilizer Bar
3	127-7411-03	1	Bracket-Bar, Stabilizer
4	3234-39	5	Screw-HHF
5	104-8301	9	Nut-HF, NI
6	3234-46	7	Screw-HHF
7	99-5107	11	Nut-Lock
8	109-5013	1	Panhard Rod ASM
8:2	109-5009	2	Bushing-Suspension, Rubber
8:3	109-5010	2	Spacer
9	86-1990	6	Washer-Thrust
10	131-8315	1	Bracket-Link, Sway Bar

Ref.	Part Number	Qty.	Description
11	3234-40	4	Screw-HF
14	139-4644	2	Clamp, Anti-Sway Bar
15	87-3910	2	Bushing-Rubber
16	131-8310-03	1	Bar-Sway, Anti
17	131-8394	2	Link-Bar, Sway
18	3231-22	4	Screw-CARR
19	131-8346	2	Panel-Side
20	125-9622	20	Rivet-Blind
21	3290-378	2	Tie-Cable
22	74-5950	2	Latch-Swell
25	137-6741	1	Ball Mount ASM
28	138-3528	1	Decal-Service
31	140-4573	1	Extended Panel-Cover
31:2	99-7345	1	Decal-Warning

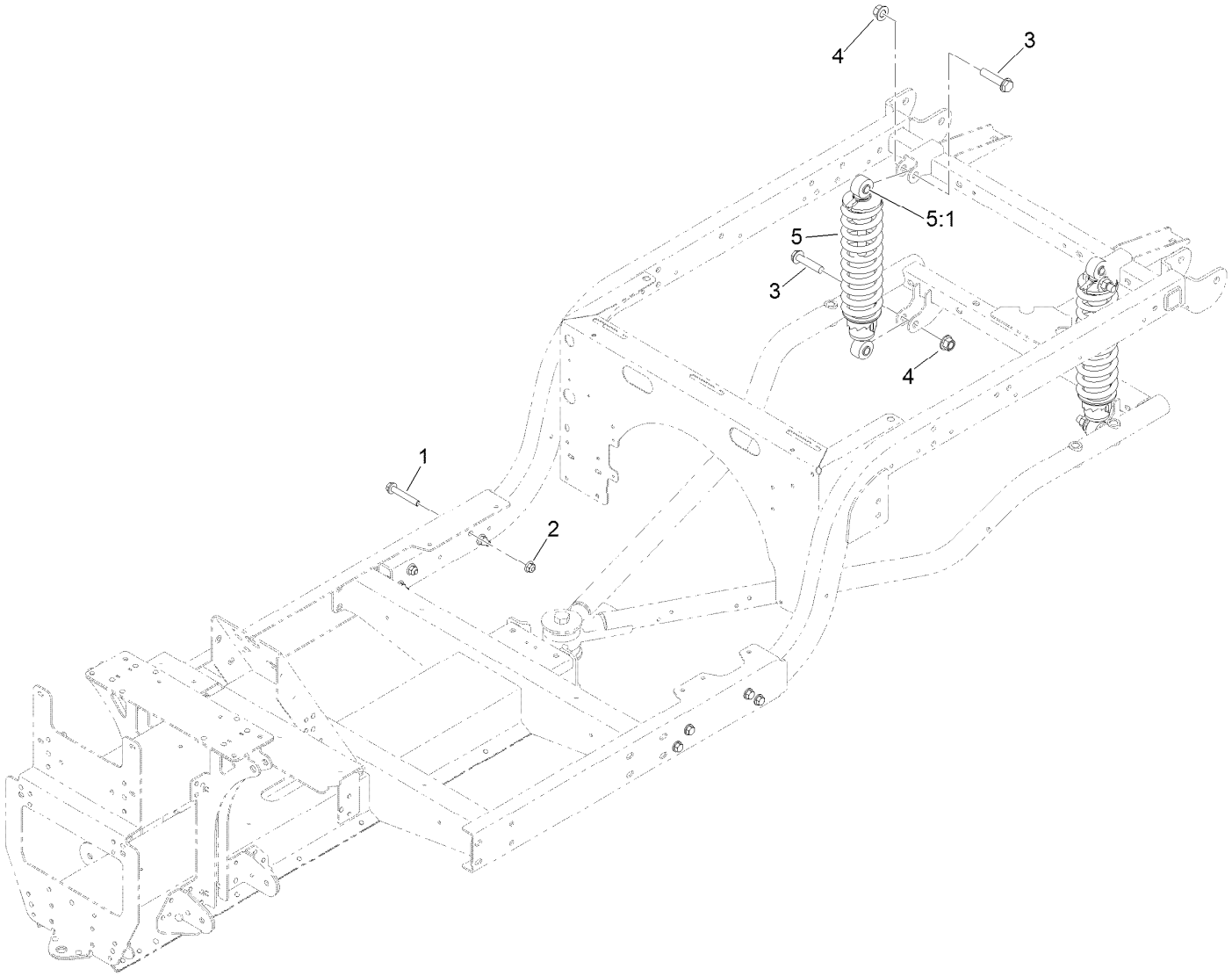

Frame Mount and Rear Shock/Spring Assembly

Ref.	*Part Number*	*Qty.*	*Description*
1	3234-39	8	Screw-HHF
2	104-8301	8	Nut-HF, NI
3	3234-46	4	Screw-HHF
4	99-5107	4	Nut-Lock
5	139-4607	2	Shock/Spring ASM
5:1	131-8574	2	Isolator-Shock

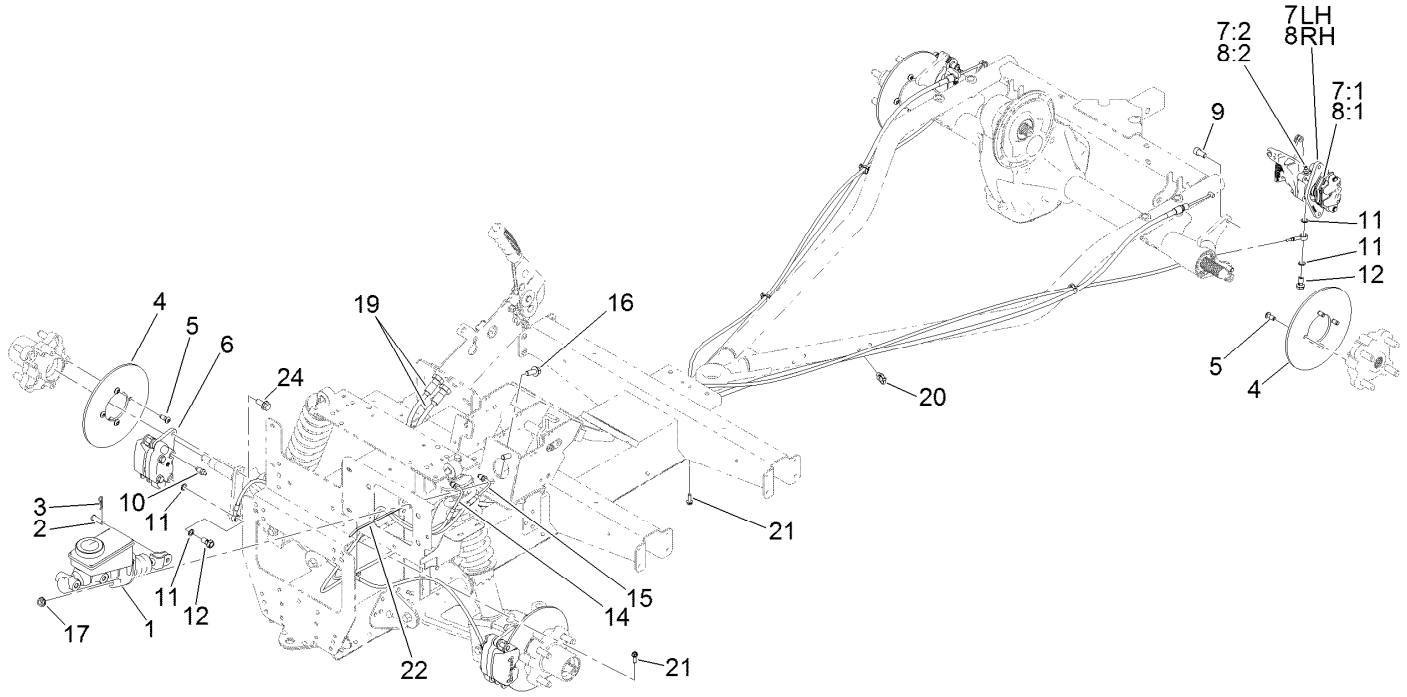

Brake Assembly

Ref.	Part Number	Qty.	Description
1	104-6782	1	Master Cylinder ASM
2	283-2	1	Pin-Clevis
3	1-806003	1	Pin-Cotter
4	139-4474	4	Rotor-Brake
5	121-9671	16	Screw-HSBH
6	140-2575	2	Brake Caliper ASM
7	140-2585	1	Brake Caliper ASM, LH
7:1	140-2595	1	Brake Pad Service Kit (Rear, Qty 4)
7:2	119-9509	1	Screw-Bleed
7:3	136-6328	2	Spring-Rattle, Anti ●
8	140-2590	1	Brake Caliper ASM, RH
8:1	140-2595	1	Brake Pad Service Kit (Rear, Qty 4)
8:2	119-9509	1	Screw-Bleed
8:3	136-6328	2	Spring-Rattle, Anti ●
9	131-8573	4	Screw-HSH
10	119-9509	2	Screw-Bleed
11	115-2341	8	Washer-Banjo
12	120-4875	4	Bolt-Flange, Banjo
14	127-7781	1	Brake Line-Front
15	127-7782	1	Brake Line-Rear
16	3234-11	2	Screw-HHF
17	3290-357	2	Nut-HHF, Whiz
19	131-8406	2	Cable-Park Brake
20	32180-030	4	Clip-Tie
21	49-2040	2	Screw-HWHTF
22	3290-378	1	Tie-Cable
24	3234-25	4	Screw-HHF

● Not illustrated

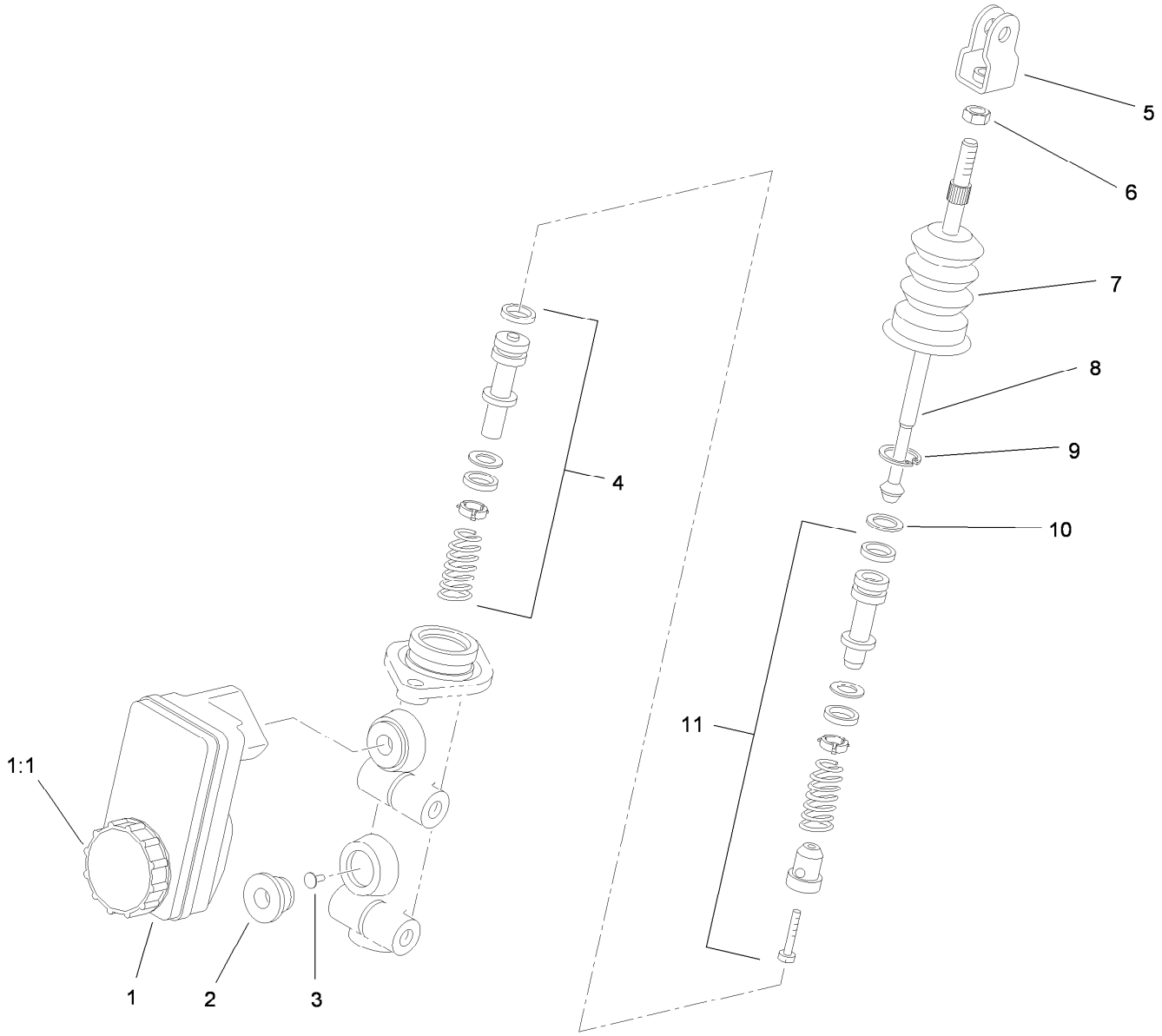

Master Cylinder Assembly No. 104-6782

Ref.	*Part Number*	*Qty.*	*Description*
1	104-6845	1	Reservoir ASM
1:1	92-4112	1	Cap ASM
2	93-8971	2	Seal-Port, Flange
3	92-4103	1	Pin-Stop
4	92-4102	1	Secondary Piston ASM
5	92-4110	1	Clevis
6	21-0360	1	Nut-Hex
7	94-5209	1	Cover-Dust
8	94-5210	1	Rod-Push
9	92-4109	1	Ring-Snap
10	92-4108	1	Retainer-Washer
11	92-4101	1	Primary Piston ASM

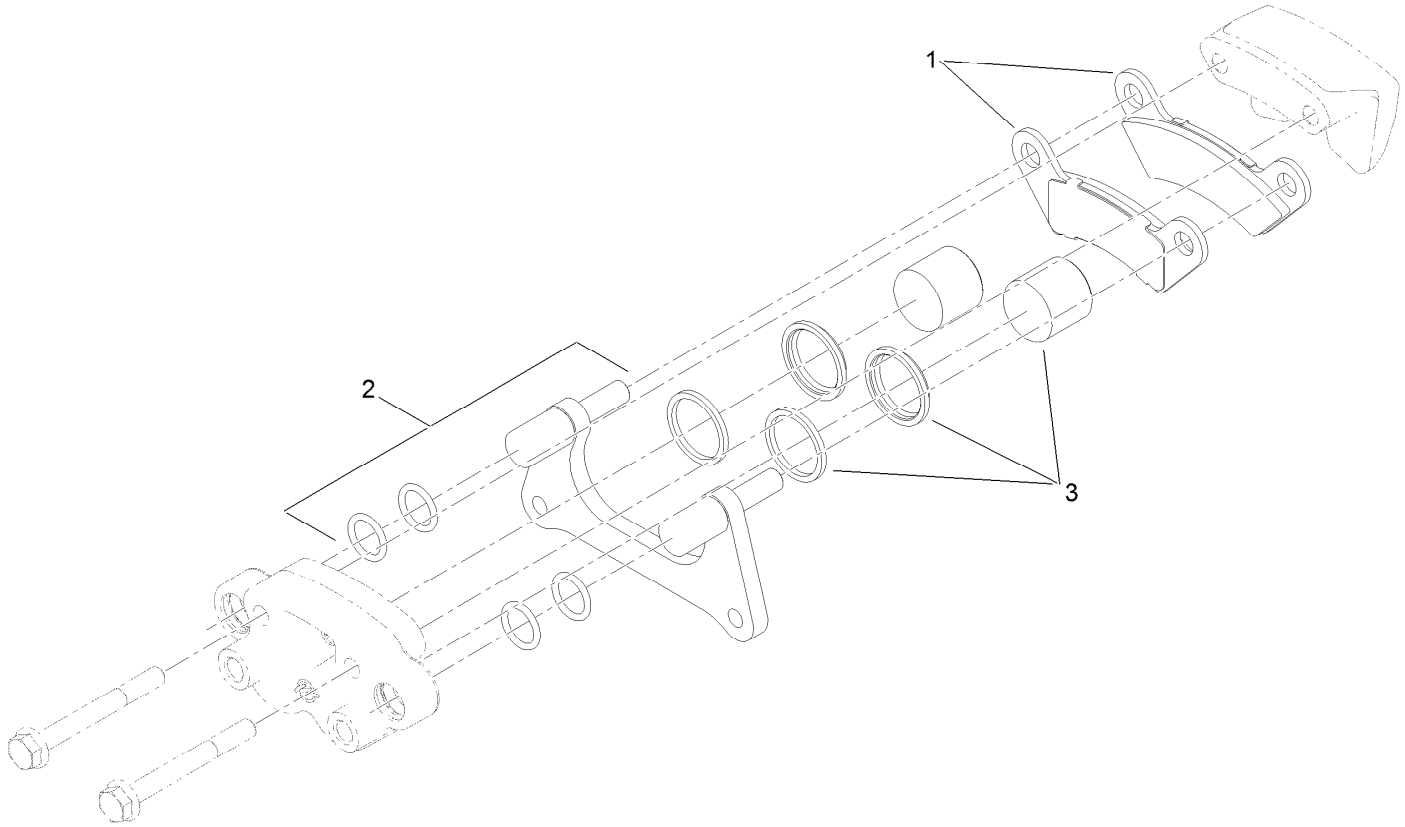

Brake Caliper Assembly No. 140-2575

Ref.	*Part Number*	*Qty.*	*Description*
1	140-2580	1	Brake Pad Service Kit (Front, Qty 4)
2	119-9511	1	Bracket Kit
3	133-0614	1	Piston Kit

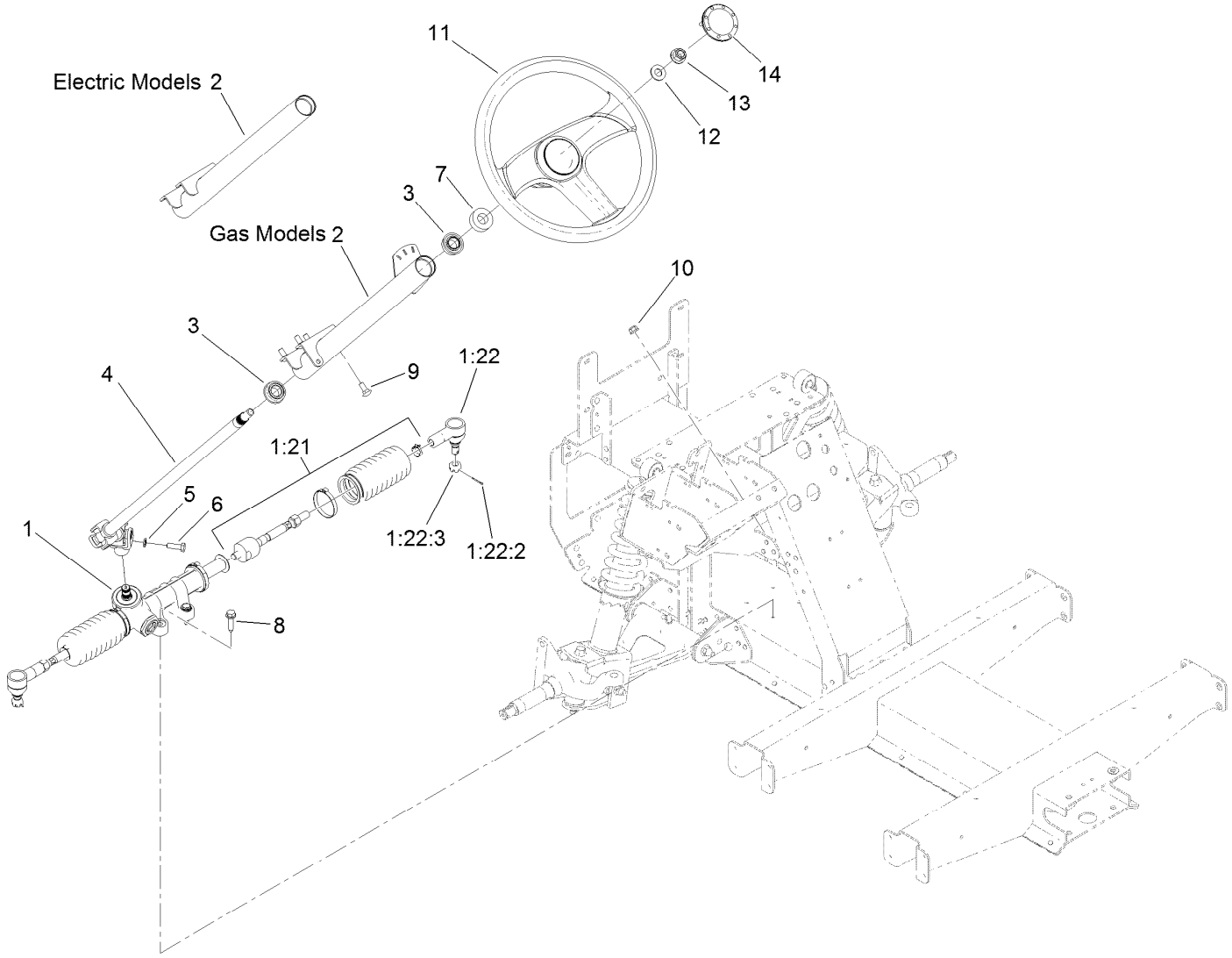

Steering Assembly

Ref.	Part Number	Qty.	Description
1	138-0114	1	Steering Rack ASM
1:21	140-4591	1	Kit-Tie Rod ASM, Gtx
1:22	140-4592	1	Kit-Rod End ASM
1:22:2	3272-42	1	Pin-Cotter
1:22:3	140-2493	1	Nut-Hex, Slotted
2	137-2754	1	Steering Column ASM
3	112-3262	2	Bearing
4	127-8804	1	Shaft-Steering
5	3253-4	1	Washer-Lock

Ref.	Part Number	Qty.	Description
6	116-3515	1	Screw-HH, Special
7	21-9260	1	Cover-Dust
8	32144-49	4	Screw-HWHTF
9	3230-1	4	Bolt-CARR
10	104-8300	4	Nut-HF, NI
11	131-0957	1	Wheel-Steering
12	3256-26	1	Washer-Flat
13	99-5107	1	Nut-Lock
14	131-3630	1	Cap-Wheel, Steering

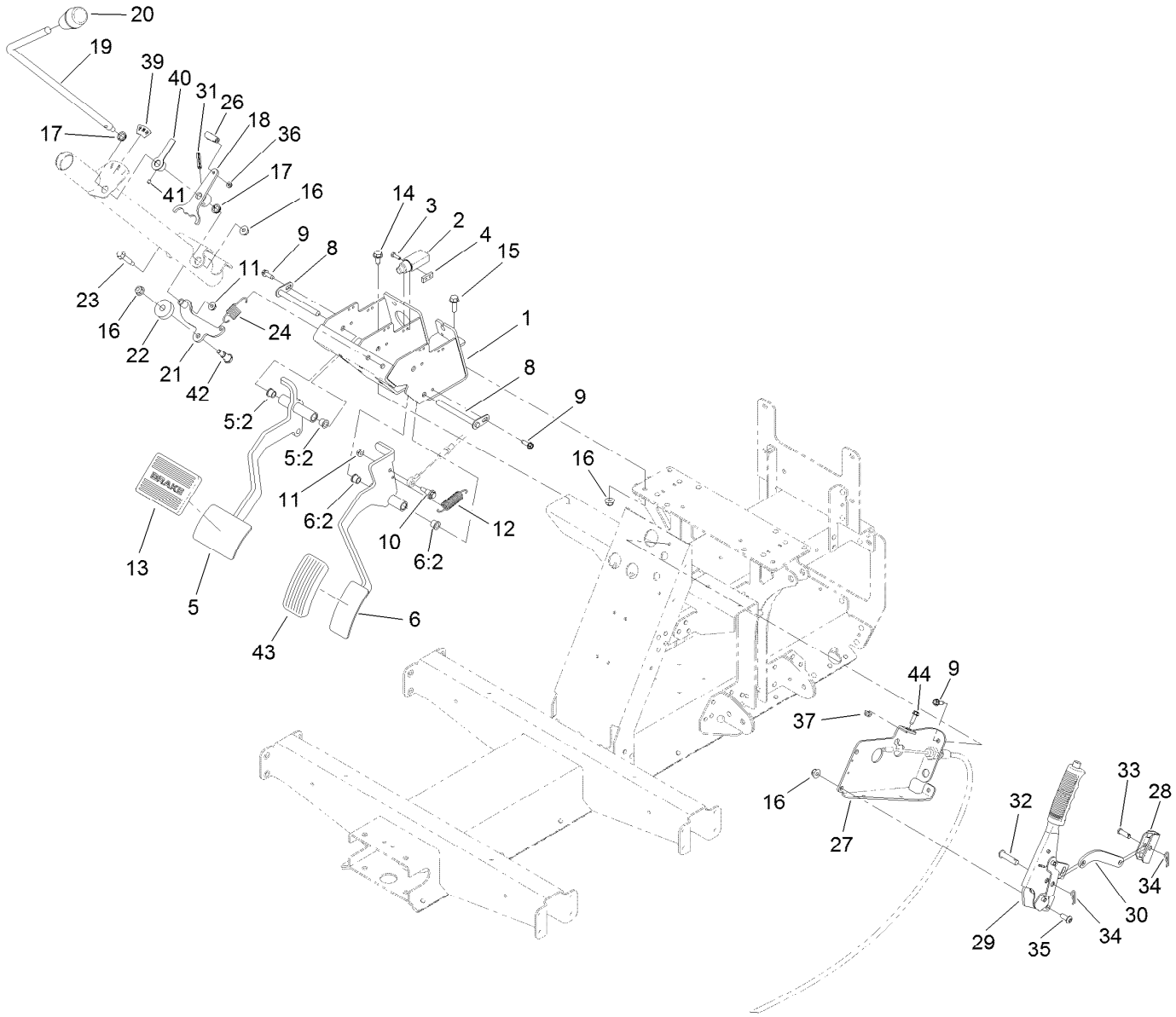

Pedal and Control Assembly

Ref.	Part Number	Qty.	Description
1	127-8817-03	1	Mount-Pedal
2	99-7407	1	Switch
3	3290-134	2	Screw
4	1-633181	1	Plate-Tapped
5	138-9385	1	Brake Pedal ASM
5:2	256-116	2	Bushing-Flange
6	138-9390	1	Throttle Pedal ASM, Gtx
6:2	256-116	2	Bushing-Flange
8	131-8459	2	Shaft-Pivot
9	49-2040	4	Screw-HWHTF
10	104-0858	1	Bolt-Shoulder
11	32128-33	2	Nut-HF
12	67-1450	1	Spring-Idler
13	7-3900	1	Pad-Brake
14	32144-70	2	Screw-HWHTF
15	3234-29	1	Screw-HHF
16	104-8300	5	Nut-HF, NI
17	110-3318	2	Bushing-Snap
18	127-8833	1	Arm-Shift
19	127-8830	1	Shaft-Shifter
20	131-8473	1	Knob-Tapered

Ref.	Part Number	Qty.	Description
21	133-7214	1	Arm-Detent
22	133-7212	1	Bushing-Detent, Shift
23	116-6876	1	Screw-Shoulder
24	131-8419	1	Spring-Extension
26	2411-38	1	Joint-Ball
27	140-4836-03	1	Mount-Park Brake
28	87-3480	1	Bracket-Equalizer, Cable
29	131-8320	1	Lever-Brake, Park
30	127-8836-03	1	Link-Brake, Park
31	32121-9	1	Pin-Roll, Slotted
32	283-10	1	Pin-Clevis
33	1-808280	1	Pin-Clevis
34	1-806003	2	Pin-Cotter
35	3274-55	2	Screw-HSBH
36	3296-27	1	Nut-Lock, NI
37	104-7201	1	Nut-HF
39	131-8463	1	Decal-Shift
40	131-8462-01	1	Indicator-Shift
41	3245-20	1	Screw-HSH
42	613529	1	Screw-Shoulder

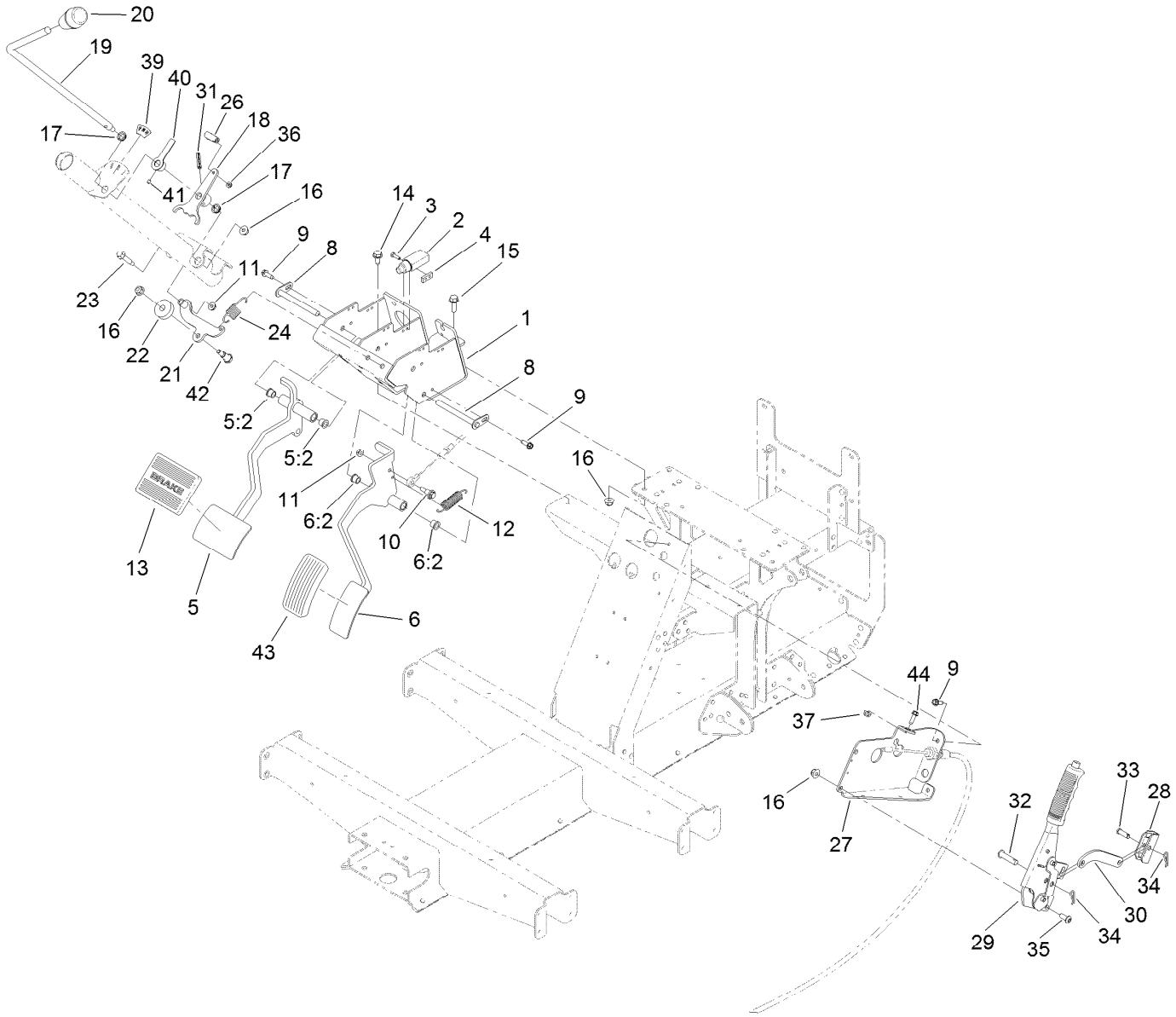

Pedal and Control Assembly (continued)

Ref.	Part Number	Qty.	Description
43	140-4572	1	Pedal Pad-Throttle
44	115-5103	1	Screw-HHF

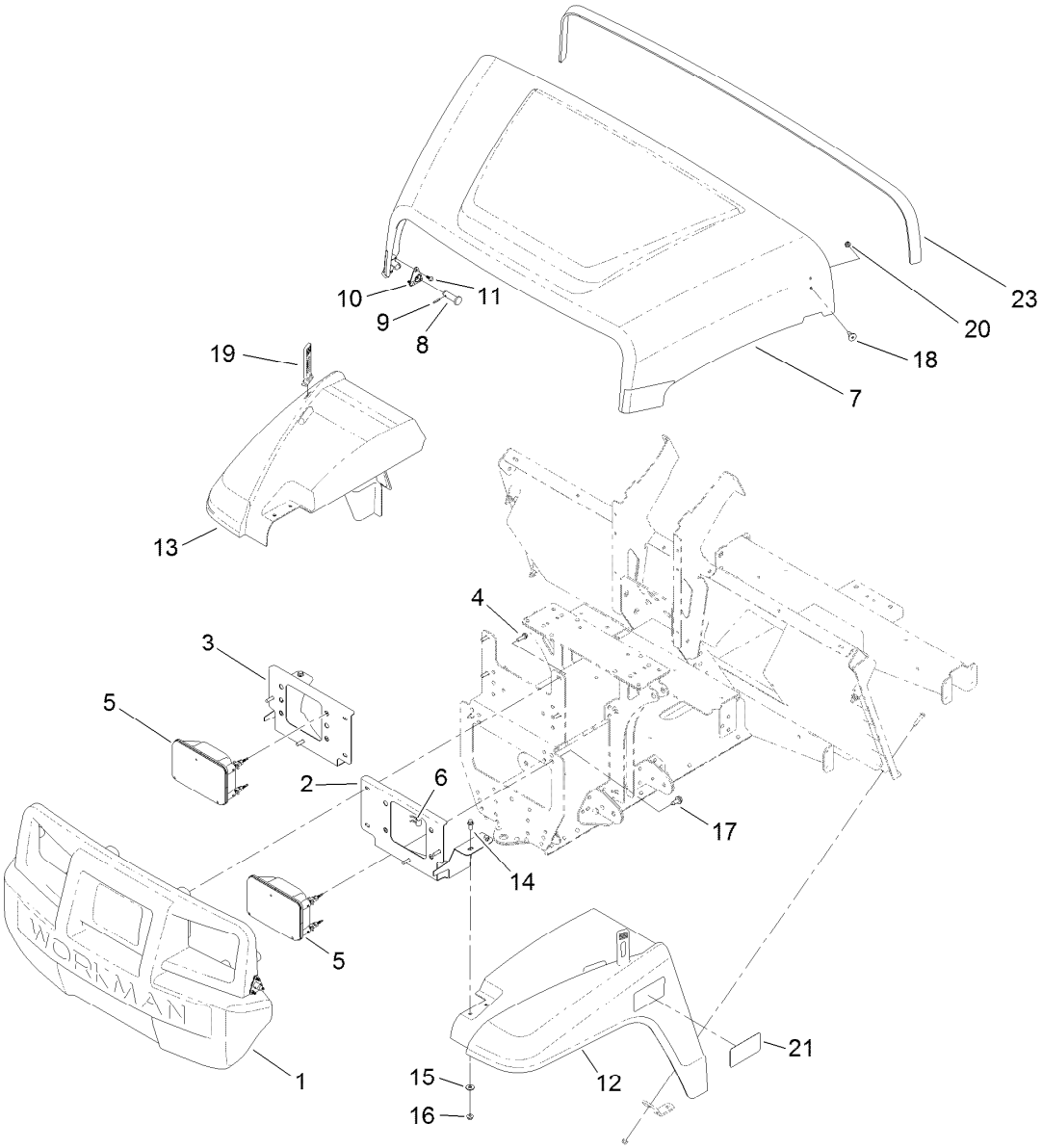

Hood and Fender Assembly

Ref.	Part Number	Qty.	Description
1	132-8530	1	Bumper
2	131-8455-03	1	Bracket-Headlight, LH
3	131-8456-03	1	Bracket-Headlight, RH
4	46-8091	8	Screw-HWH
5	138-9260	2	Headlight ASM
6	115-2408	6	Clip-Speed
7	136-6281	1	Hood
8	117-5094	2	Pin-Clevis
9	32121-50	2	Pin-Spring
10	112-3308	2	Retainer-Pin
11	121-9605	6	Screw-HWH

Ref.	Part Number	Qty.	Description
12	127-7771	1	Fender-Front, LH
13	127-7772	1	Fender-Front, RH
14	3234-33	4	Screw-HHF
15	3256-2	4	Washer-Flat
16	104-7201	4	Nut-HF
17	32144-70	2	Screw-HWHTF
18	125-1122	2	Screw
19	131-8402	2	Strap-Down, Hold
20	3296-56	2	Nut-Lock, NI
21	138-3527	2	Decal-Fender
23	133-7210	1	Seal-Trim, Hood

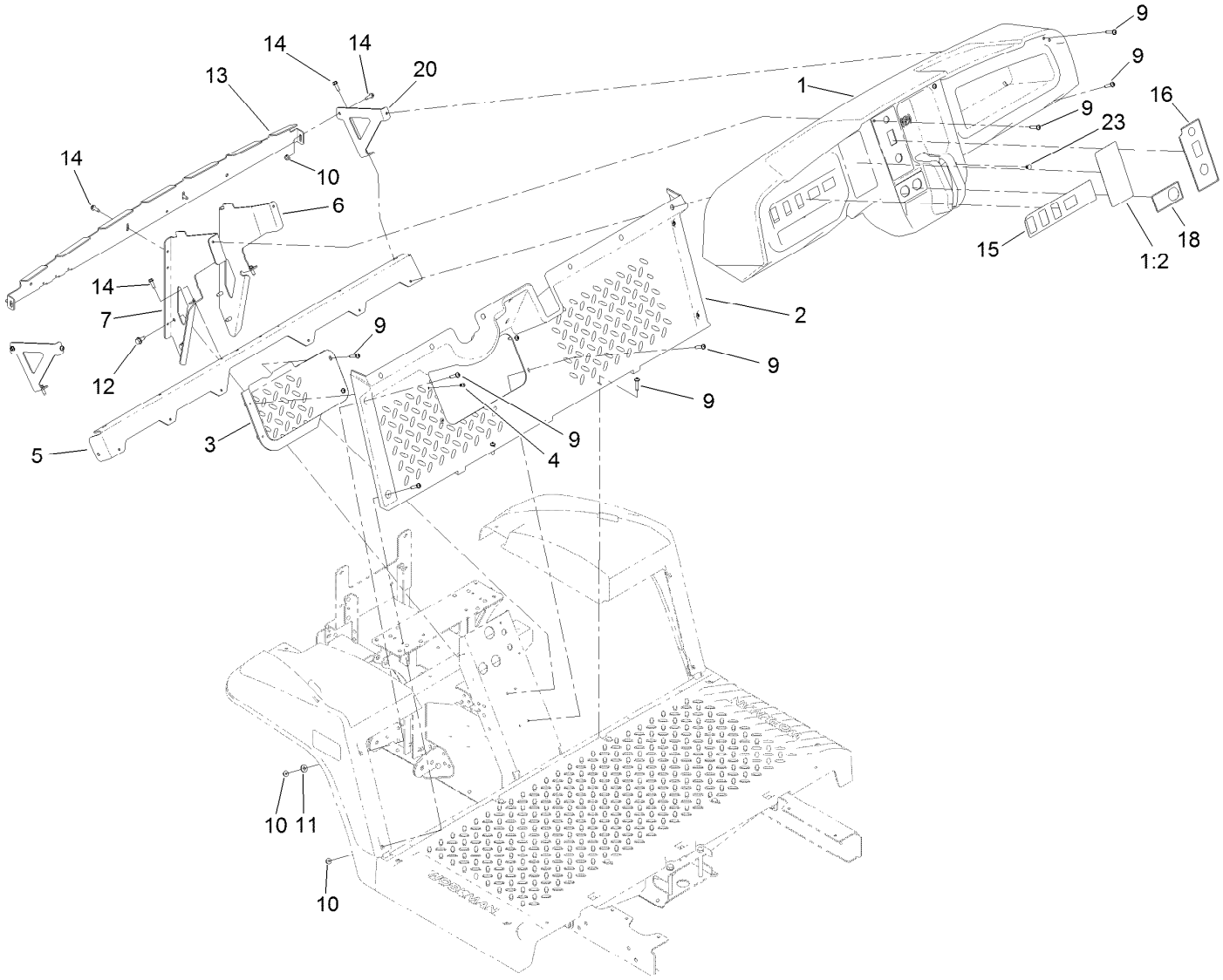

Dash Assembly

Ref.	Part Number	Qty.	Description
1	131-8593	1	Dash
1:2	131-8414	1	Decal-Danger
2	127-7846	1	Footboard
3	127-7847	1	Cover-Footboard
4	107-7461	2	Screw-Plastite
5	127-7831-03	1	Angle
6	131-8336-03	1	Bracket-Dash, RH
7	131-8335-03	1	Bracket-Dash, LH
9	132-6777	20	Screw-TTH
10	104-7201	6	Nut-HF

Ref.	Part Number	Qty.	Description
11	3256-2	2	Washer-Flat
12	32144-70	4	Screw-HWHTF
13	131-8568-03	1	Reinforcement-Dash
14	49-2040	8	Screw-HWHTF
15	138-3524	1	Decal-Dashboard
16	138-3397	1	Decal-Control Panel, EFI
18	131-8493	1	Decal-USB
20	131-8569-03	2	Bracket-Dash, Side
23	104-9368	1	Plug-Dome

Reference Model 07048 For Bucket Seat Base Kit Parts

Reference Model 07047 For Bench Seat Base Kit Parts

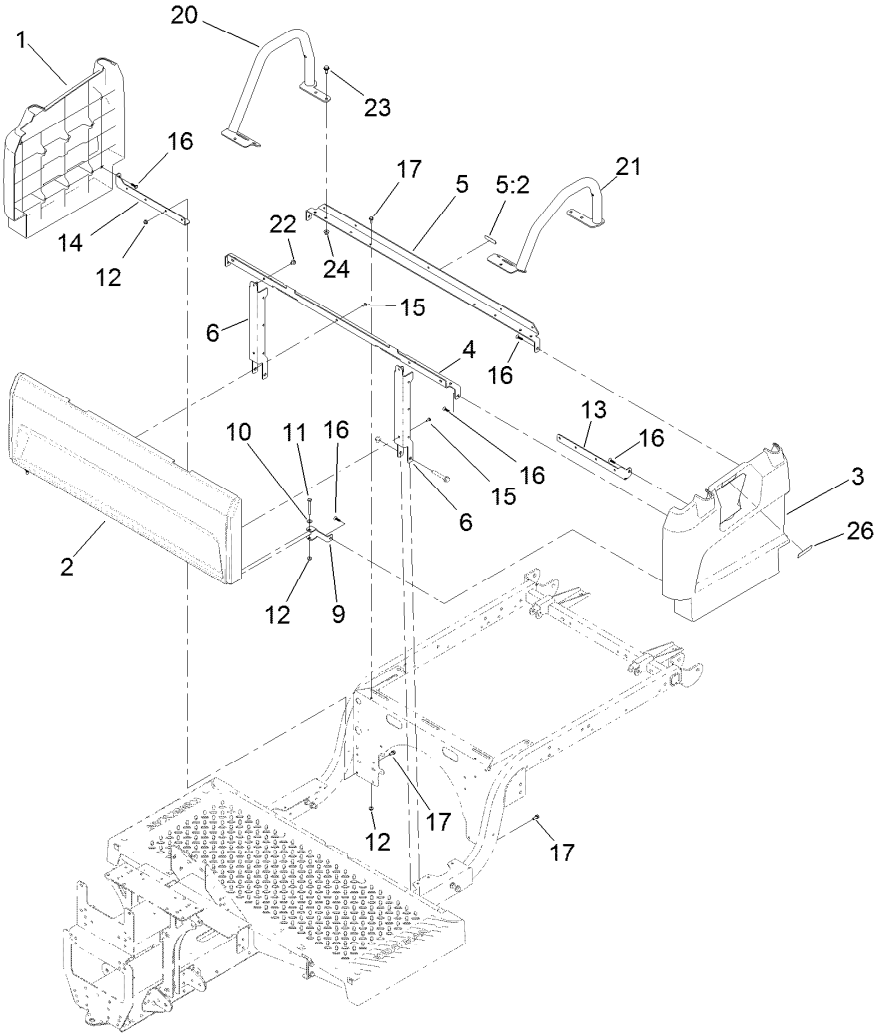

Seatbase Assembly

Ref.	Part Number	Qty.	Description
1	127-7805	1	Side-Base, Seat (RH)
2	133-7188	1	Panel-Base, Seat
3	127-7807	1	Side-Base, Seat (LH)
4	133-7345-03	1	Support-Seat
5	137-6991	1	Seat Support ASM
5:2	120-9570	1	Decal-Warning
6	127-7841-03	2	Channel-Support, Seat
9	127-7844-03	2	Clamp-Plate, Floor
10	3256-22	2	Washer-Flat
11	321-18	2	Screw-HH
12	104-7201	8	Nut-HF

Ref.	Part Number	Qty.	Description
13	127-7842-03	1	Bracket-Support, Side (LH)
14	127-7843-03	1	Bracket-Support, Side (RH)
15	112-6349	5	Screw-HWH
16	120-2349	8	Screw
17	3234-33	6	Screw-HHF
20	131-8352-05	1	Restraint-Hip, RH
21	131-8353-05	1	Restraint-Hip, LH
22	46-6810	2	Screw And Washer ASM
23	32144-70	6	Screw-HWHTF
24	104-8300	6	Nut-HF, NI
26	131-8410	1	Decal-Danger, Fuel

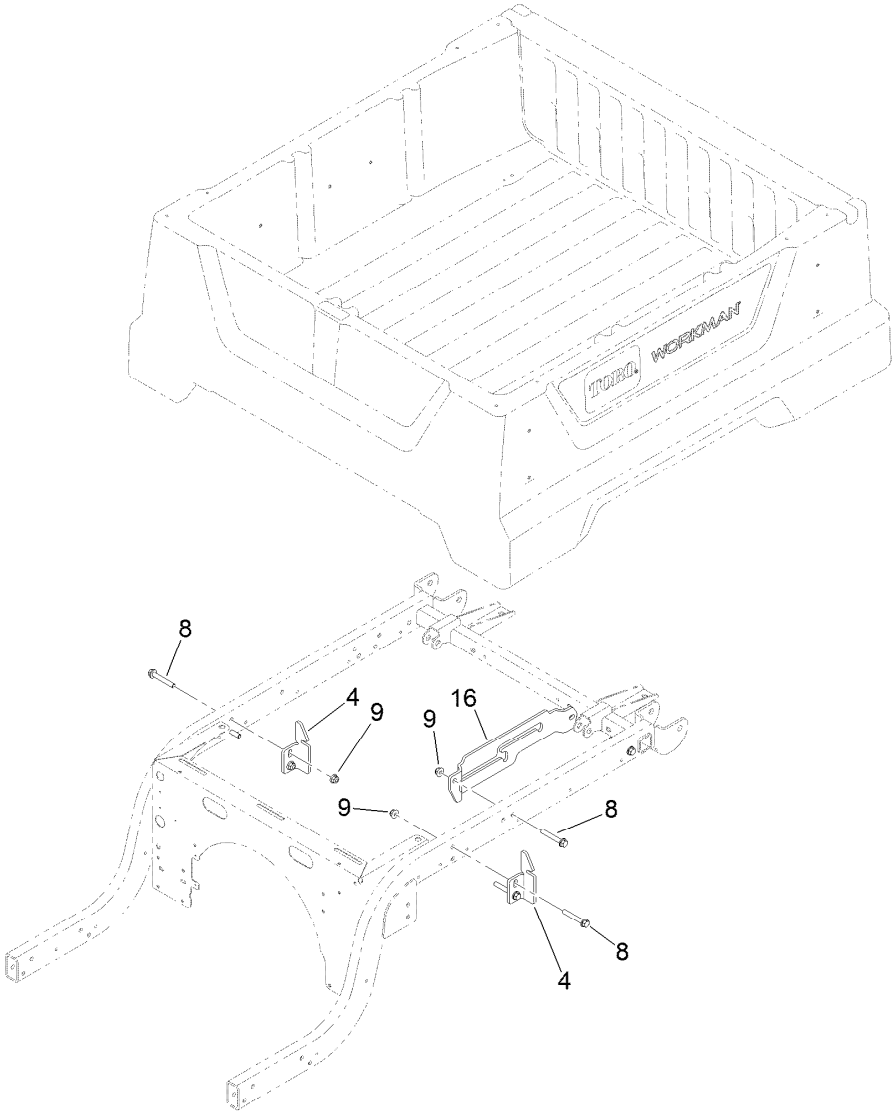

Cargo Bed Assembly

Ref.	Part Number	Qty.	Description
4	127-7428-03	2	Striker-Latch, Bed
8	3234-39	6	Screw-HHF
9	104-8301	6	Nut-HF, NI
16	132-8518	1	Bracket-Rod, Prop

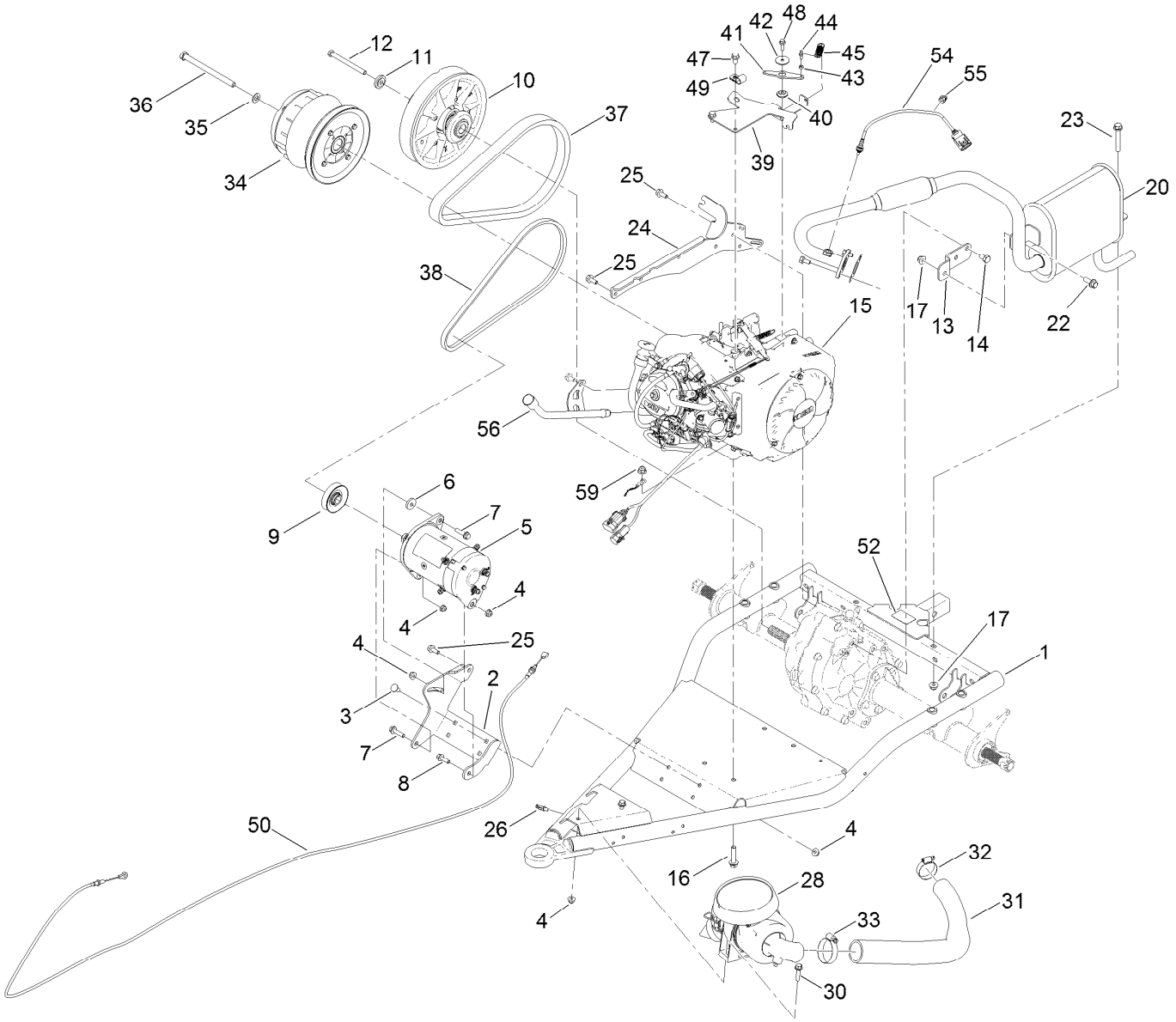

Engine Assembly

Ref.	Part Number	Qty.	Description
1	140-2558-03	1	Gtx Swing Arm ASM
2	131-8503-03	1	Bracket-Starter/Generator
3	3230-23	4	Bolt-CARR
4	104-8300	9	Nut-HF, NI
5	131-8444	1	Starter/Generator ASM
6	65-8270	1	Washer
7	119-4036	2	Screw-HHF
8	3234-29	1	Screw-HHF
9	121-6277	1	Pulley-Drive
10	119-6011	1	Secondary Clutch ASM
11	104-6563	1	Washer-Stepped
12	119-0723	1	Screw-HH, Lock
13	131-8329	1	Bracket-Muffler
14	70-8470	2	Screw-HH
15	133-8092	1	Engine-Kohler, Ech440
16	140-4808	4	Screw-HHF
17	104-8301	2	Nut-HF, NI
20	138-9275	1	Exhaust ASM
22	3234-42	1	Screw-HHF
23	3234-39	1	Screw-HHF
24	140-4648	1	Plate-Spanner

Ref.	Part Number	Qty.	Description
25	139-3392	6	Screw-Lock
26	32180-030	1	Clip-Tie
28	138-3447	1	Air Cleaner ASM
30	3234-36	2	Screw-HHF
31	131-8489	1	Hose-Intake, Air
32	2412-111	1	Clamp
33	2412-92	1	Clamp-Hose
34	138-0095	1	Primary Clutch ASM
35	3256-25	1	Washer-Flat
36	131-8521	1	Screw-HH
37	131-8567	1	Belt-Variable
38	94-8803	1	V-Belt, Impeller
39	131-8505	1	Bracket-Throttle
40	131-8524	1	Bushing-Flange
41	131-8504	1	Lever-Throttle
42	3256-55	1	Washer-Flat
43	110-2619	1	Keeper-Spring
44	99-7847	1	Ball-Stud
45	71-5470	1	Spring-Brake
47	33104-016	2	Screw-HHF
48	33103-020	1	Screw-HHF

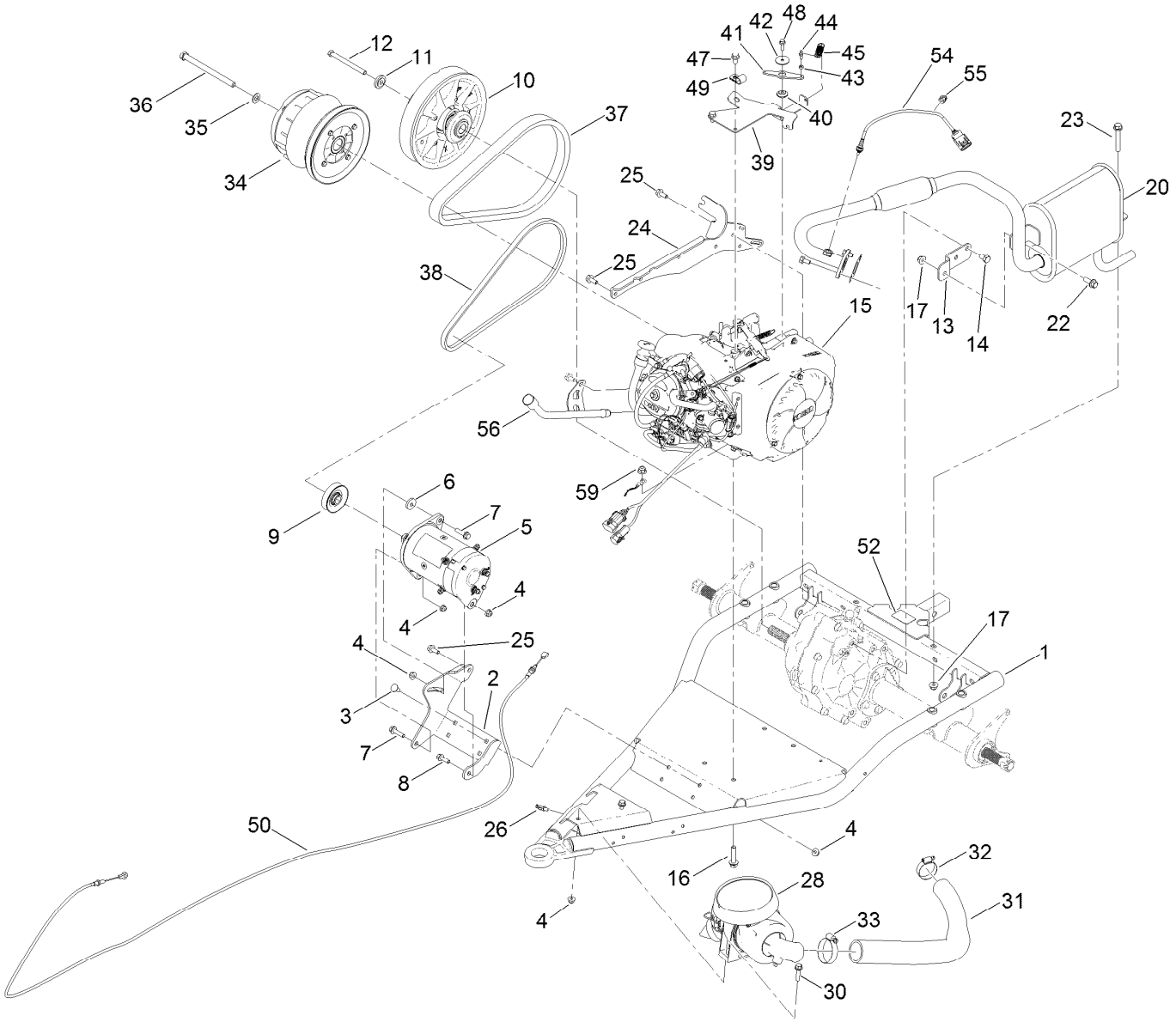

Engine Assembly (continued)

Ref.	Part Number	Qty.	Description
49	2412-138	1	R-Clamp
50	127-8860	1	Cable-Accelerator
52	137-9984	1	Decal-Load, Towing
54	136-6348	1	Sensor-O2
55	32180-226	1	Clip-Edge, Parallel W/Tie
56	140-4595	1	Dip Stick Tube ASM
59	139-3380	4	Nut-HF

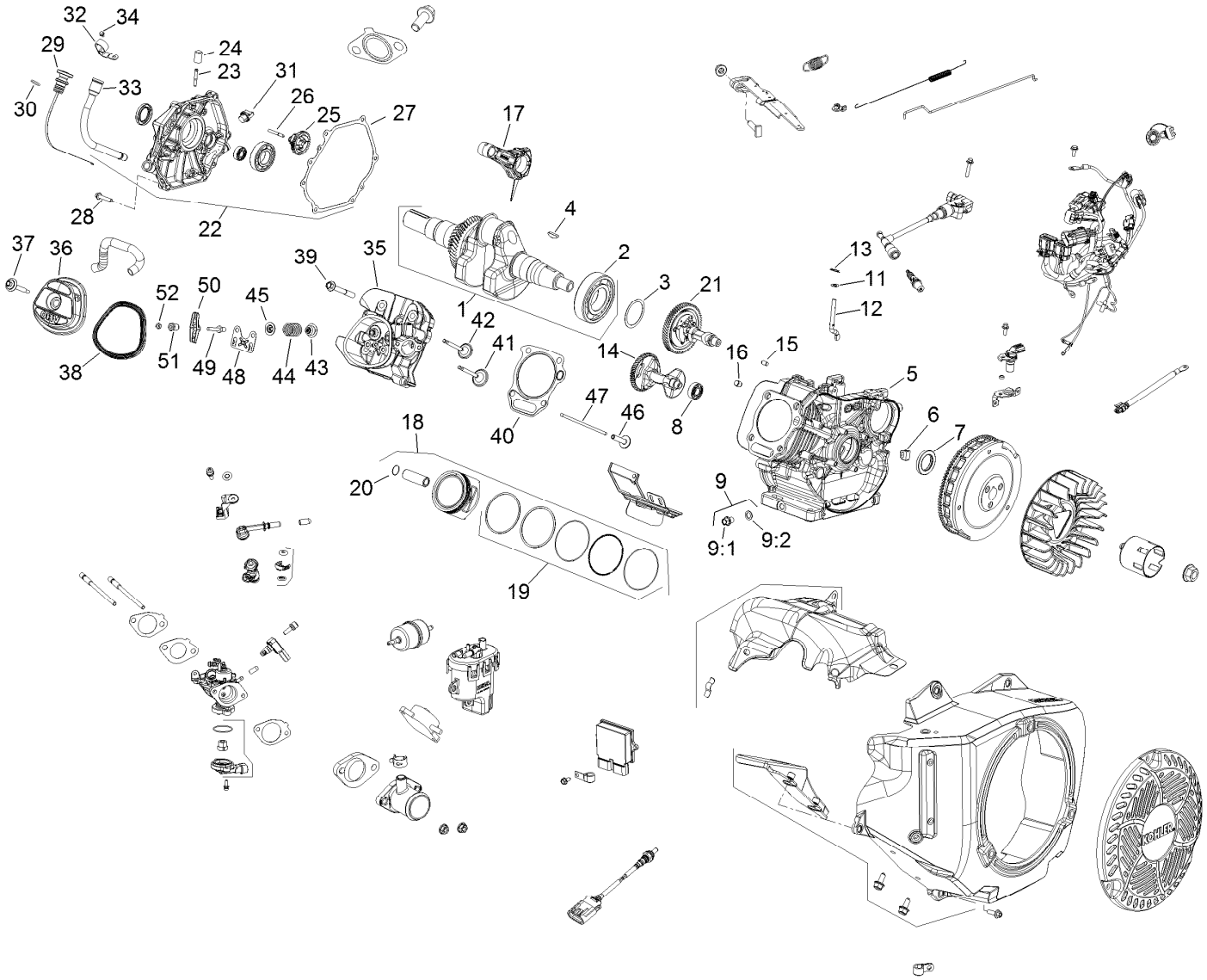

Engine Assembly No. 133-8092

Ref.	Part Number	Qty.	Description
1	136-4909	1	Crankshaft ASM
2	136-4918	2	Bearing-Crankshaft
3	136-4917	4	Bearing-Shaft, Balance
4	136-4906	1	Key-Flywheel
5		1	Crankcase (Not Serviced) ■
6	136-4957	1	Grommet-Crankcase
7	136-4920	2	Seal-Crankshaft
8	136-4916	2	Adapter-Inlet, Air
9	136-4942	2	Drain Plug Kit
9:1		1	Plug-Drain ■
9:2	136-4967	1	Washer-Plug, Drain
11	136-4968	2	Washer-Flat
12	136-4944	1	Shaft-Cross, Governor
13	136-4904	1	Clip-Shaft, Governor
14	136-4945	1	Shaft-Balance
15	136-4965	2	Pin-Dowel
16	136-4964	2	Pin-Dowel, Cylinder Head
17	140-2401	1	Connecting Rod ASM

Ref.	Part Number	Qty.	Description
18	136-4977	1	Piston W/Ring Set (STD)
18	136-4978	1	Piston Kit (0.25 Os)
18:1		1	Piston (STD) ● ■
18:1		1	Piston (0.25 Os) ● ■
18:2	136-4937	1	Ring Set ●
18:2		1	Ring Set (0.25 Os) ● ■
18:3	136-4913	2	Retainer-Piston ●
18:3	136-4913	2	Retainer-Piston ●
18:4		1	Wrist Pin ● ■
18:4		1	Pin-Wrist ● ■
19	136-4937	2	Ring Set
20	136-4913	2	Retainer-Piston
21	136-4908	1	Camshaft ASM
22	140-2402	1	Kit-Closure Plate
23	136-4955	1	Fitting-Pump, Pulse
24	140-2403	1	Cap-Masking
25	136-4956	1	Governor ASM
26	136-4943	1	Shaft-Gear, Governor

● Not illustrated

■ Not serviced separately

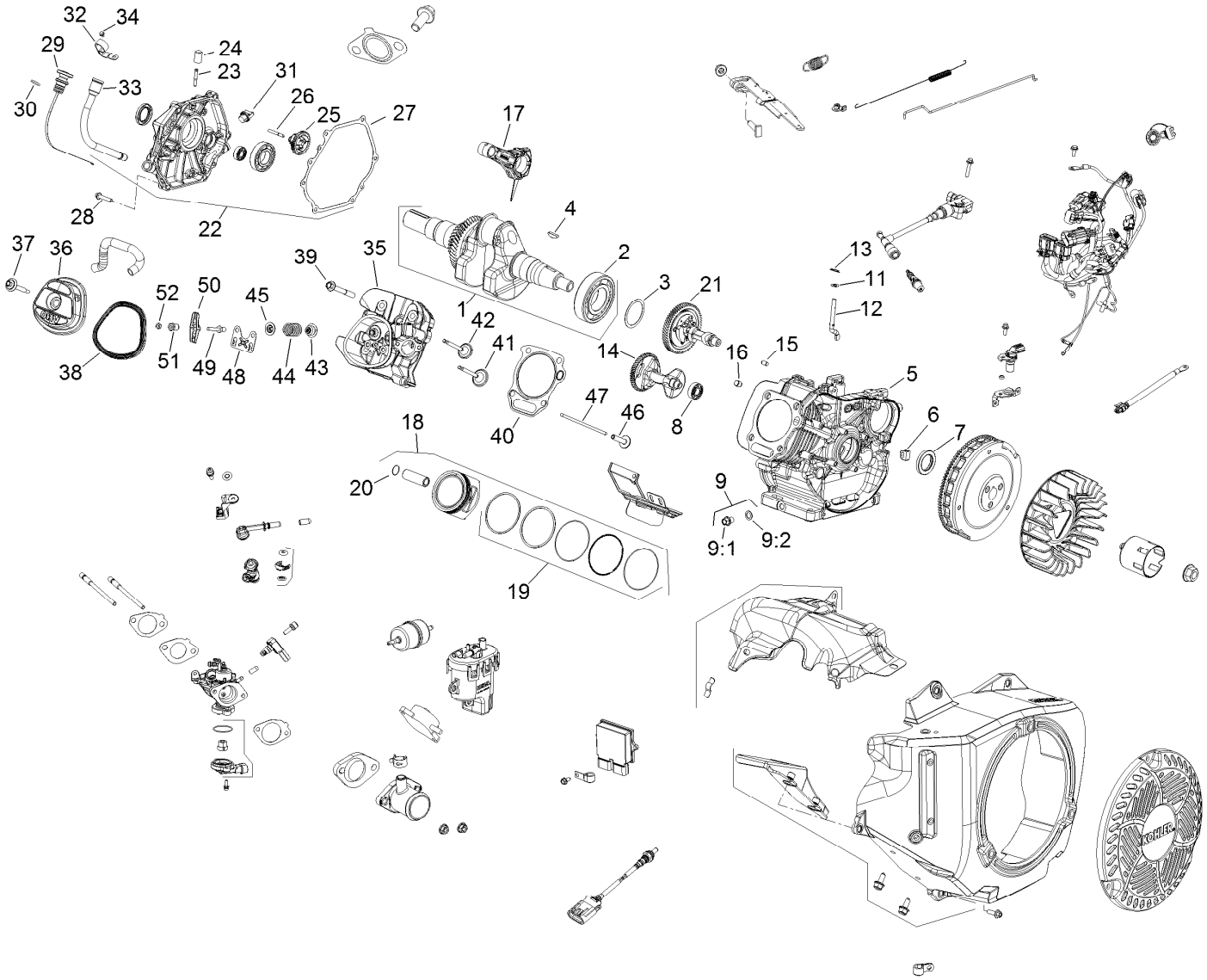

Engine Assembly No. 133-8092 (continued)

Ref.	Part Number	Qty.	Description
27	136-4923	1	Gasket-Plate, Closure
28	136-4983	7	Screw-Plate, Closure
29	140-2404	1	Dipstick ASM
30	140-2405	1	O-Ring-Dipstick Cap
31	136-4952	1	Oil Fill Cap ASM
31:1		1	Oil Fill Cap ●■
31:2		1	Gasket ●■
32	140-2406	1	Bracket-Dipstick Tube
33	138-9383	1	Dip Stick Tube ASM
34	136-4991	1	Screw-HF
35	136-4961	1	Cylinder Head Kit
35:1		1	Head-Cylinder ●■
35:2	136-4929	2	Stud-Intake ●
36	136-4935	1	Valve Cover Kit
36:1		1	Cover-Valve ●■
36:2	136-4927	1	Gasket-Cover, Valve ●
36:3	136-4988	1	Screw (Valve Cover Seal ASM) ●
36:3:1		1	Screw-Cover, Valve ●■
36:3:2		1	Gasket-Screw, Valve Cover ●■
37	136-4988	1	Screw (Valve Cover Seal ASM)
37:1		1	Screw-Cover, Valve ●■
37:2		1	Gasket-Screw, Valve Cover ●■
38	136-4927	1	Gasket-Cover, Valve
39	140-2407	4	Screw-Hex Flange
40	140-2408	1	Head Gasket Kit
41	136-4911	1	Valve-Intake
42	136-4912	1	Retainer-Spring, Valve
43	136-4919	2	Seal-Stem, Valve
44	136-4931	2	Spring-Valve
45	136-4912	2	Retainer-Spring, Valve
46	136-4963	2	Lifter-Valve
47	136-4966	2	Rod-Push

● Not illustrated

■ Not serviced separately

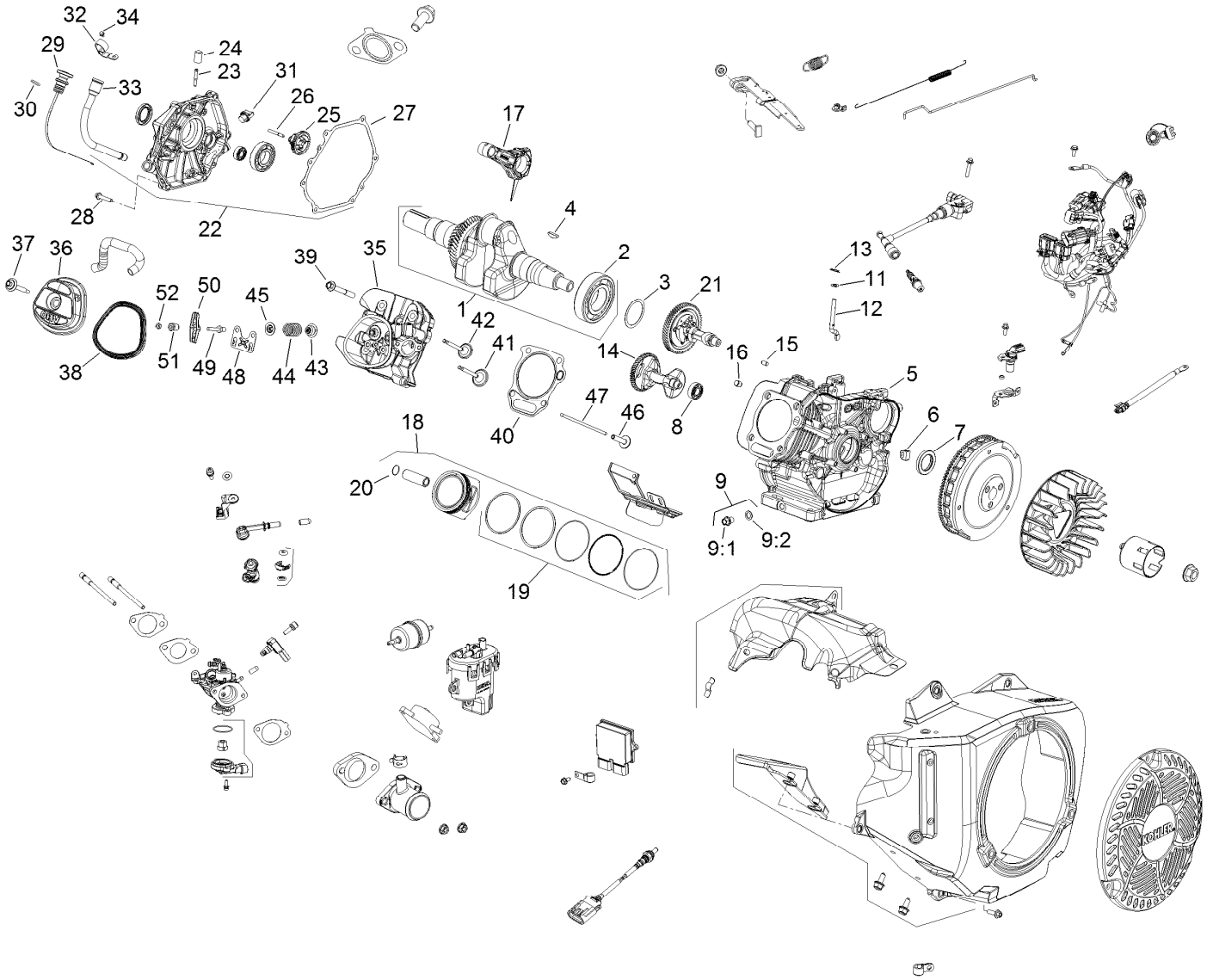

Engine Assembly No. 133-8092 (continued)

Ref.	Part Number	Qty.	Description
48	136-4946	1	Plate-Guide, Pushrod
49	136-4900	2	Stud-Arm, Rocker
50	136-4953	2	Arm-Rocker
51	136-4907	2	Pivot-Arm, Rocker
52	136-4901	2	Nut-HJ

● Not illustrated

■ Not serviced separately

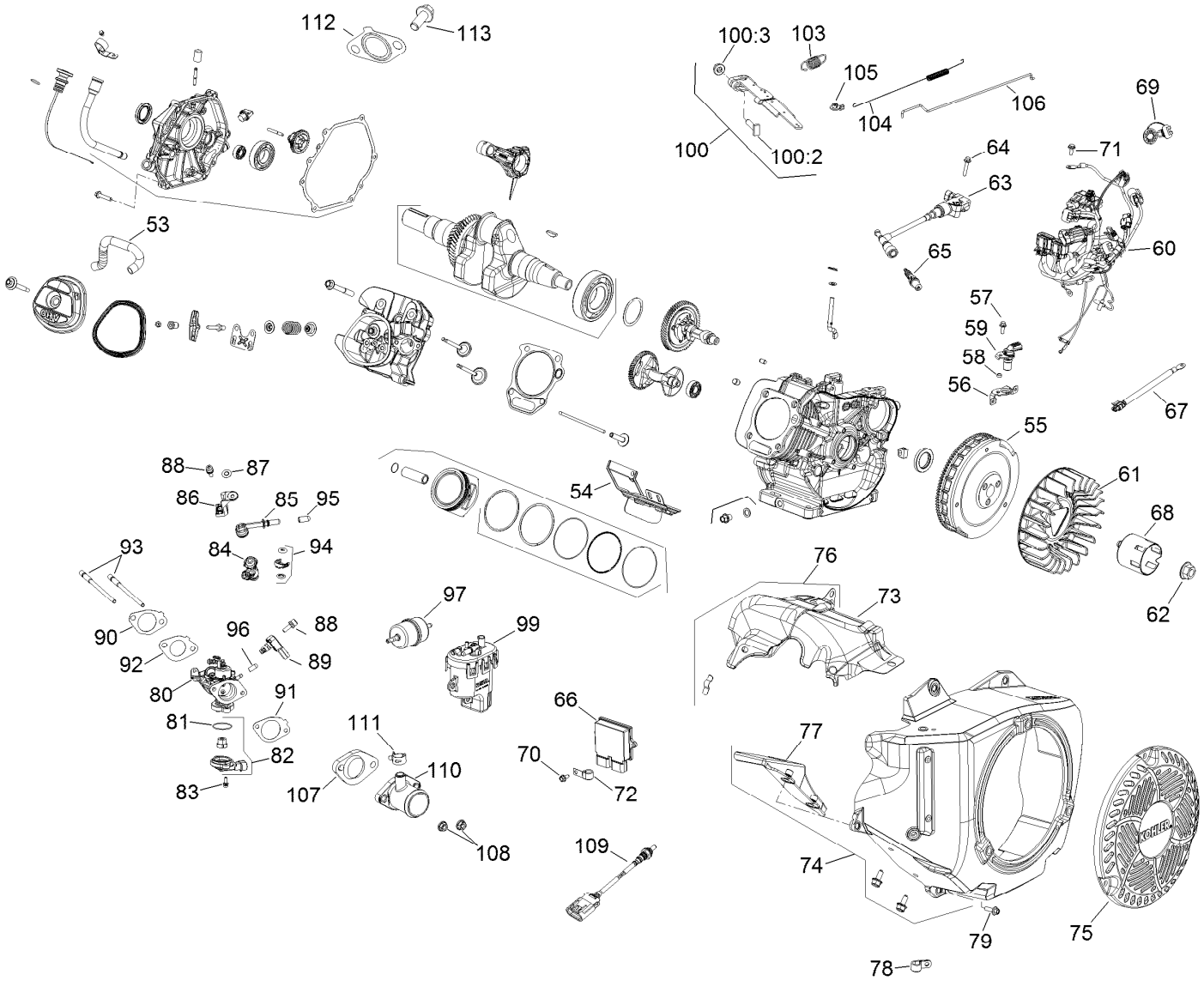

Engine Assembly No. 133-8092

Ref.	Part Number	Qty.	Description
53	136-4962	1	Hose-Breather
54	140-2409	1	Cylinder Shield ASM
55	140-2410	1	Flywheel ASM
56	140-2411	1	Bracket-Crank Sensor
57	140-2412	1	Screw-Hex Flange
58	140-2413	1	Spacer
59	140-2414	1	Sensor-Speed
60	140-2415	1	Wiring Harness ASM
61	136-4949	1	Fan-Flywheel
62	136-4936	1	Nut-Flywheel
63	140-2416	1	Coil-Ignition, EFI
64	140-2417	1	Screw-Hex Flange, M6
65	131-8589	1	Spark Plug
66	140-2419	1	Module-Ecu
67	140-2420	1	Lead-Sensor, Temp
68	136-4938	1	Cup-Drive, Starter
69	140-2421	2	Cap-Connector
70	136-4979	9	Screw-HF

Ref.	Part Number	Qty.	Description
71	140-2422	3	Screw-M6 X 16
72	140-2423	1	Clip-Cable
73	140-2424	1	Shield-Heat, Upper
74	140-2425	1	Blower Housing Kit
75	136-4950	1	Screen-Housing, Blower
76	140-2426	1	Heat Shield Sm
77	136-4958	1	Flywheel Finger Guard ASM
78	140-2427	1	Clamp-Insulated
79	136-4982	5	Screw
80	140-2428	1	Throttle Body And Gasket Kit
81	140-2429	1	O-Ring
82	140-2430	1	Tps Kit
83	140-2431	2	Screw-Hexalob Sems M4 X 0.7
84	140-2432	1	Injector-Fuel
85	140-2433	2	Cap-Fuel Injector
86	140-2434	1	Fuel Cap Bracket ASM

● Not illustrated

■ Not serviced separately

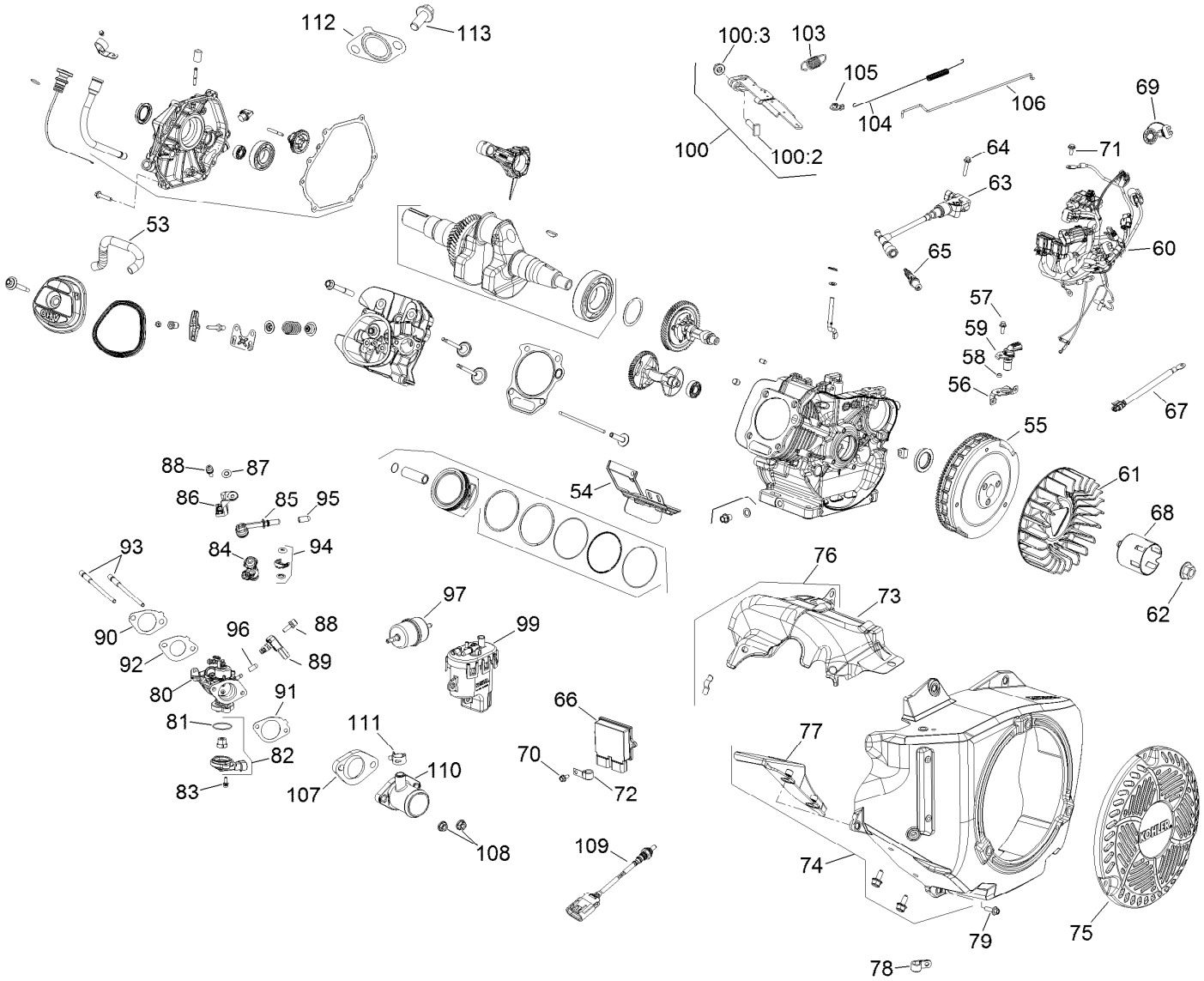

Engine Assembly No. 133-8092 (continued)

Ref.	Part Number	Qty.	Description
87	140-2435	1	Clip-Retainer
88	140-2436	2	Screw-Hexalob Sems M6 X 1
89	140-2437	1	Sensor-Tmap
90	136-4924	1	Intake Gasket Kit
90:1		1	Gasket (Insulator To Head) ●■
90:2	136-4925	1	Gasket (Carb To Insulator) ●
90:3	136-4926	1	Gasket-Cleaner, Air ●
91	140-2438	1	Gasket-Throttle Body
92	140-2439	1	Gasket-Insulator, T-Body
93	136-4929	2	Stud-Intake
94	140-2440	1	Fuel Injector O-Ring Kit
95	140-2441	1	Cap-Masking
96	140-2442	1	Cap-Masking
97	140-2443	1	Filter-Fuel
99	140-2452	1	Fuel Pump Module Kit-World Wide

Ref.	Part Number	Qty.	Description
100	136-4934	1	Governor Lever Kit
100:1		1	Lever-Governor ●■
100:2	136-4980	1	Screw-Rect Head
100:3	136-4902	1	Nut-HF
103	136-4933	1	Spring-Governor
104	140-2446	1	Spring-Linkage
105	140-2447	1	Bushing-Linkage Retainer
106	140-2448	1	Linkage-Governor
107	140-2449	1	Insulator-Throttle Body
108	136-4903	2	Nut-HF, Lock
109	140-2450	1	Sensor-Oxygen
110	136-4916	1	Adapter-Inlet, Air
111	140-2451	1	Clamp-Breather Hose
112	136-4922	1	Gasket-Muffler
113	136-4985	2	Screw

● Not illustrated

■ Not serviced separately

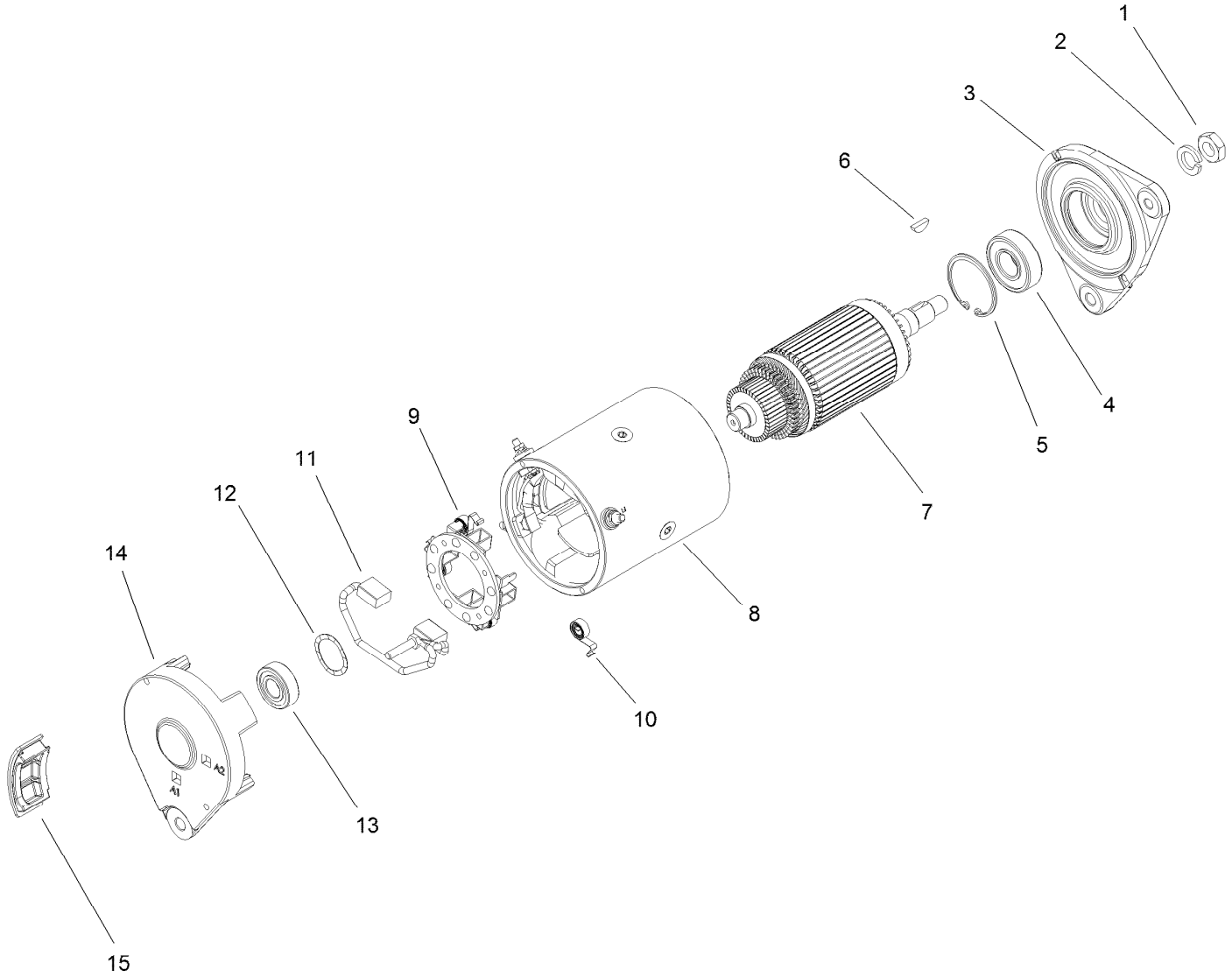

Starter Generator Assembly No. 131-8444

Ref.	Part Number	Qty.	Description
1	119-9651	1	Nut
2	119-9652	1	Washer-Lock
3	133-0599	1	Head-Drive End
4	119-9655	1	Bearing
5	119-9656	1	Ring-Retaining
6	119-9657	1	Key-Woodruff
7	119-9658	1	Armature ASM
8		1	Frame And Field Assembly ●
9	119-9661	1	Brush Box ASM
10	119-9660	4	Spring-Brush
11	119-9659	1	Brush Lead And Terminal Service Kit
12	119-9662	1	Washer-Wave
13	119-9663	1	Bearing
14		1	Head-End, Cummutator ●
15	133-0600	4	Plug-Rubber

● Not serviced separately

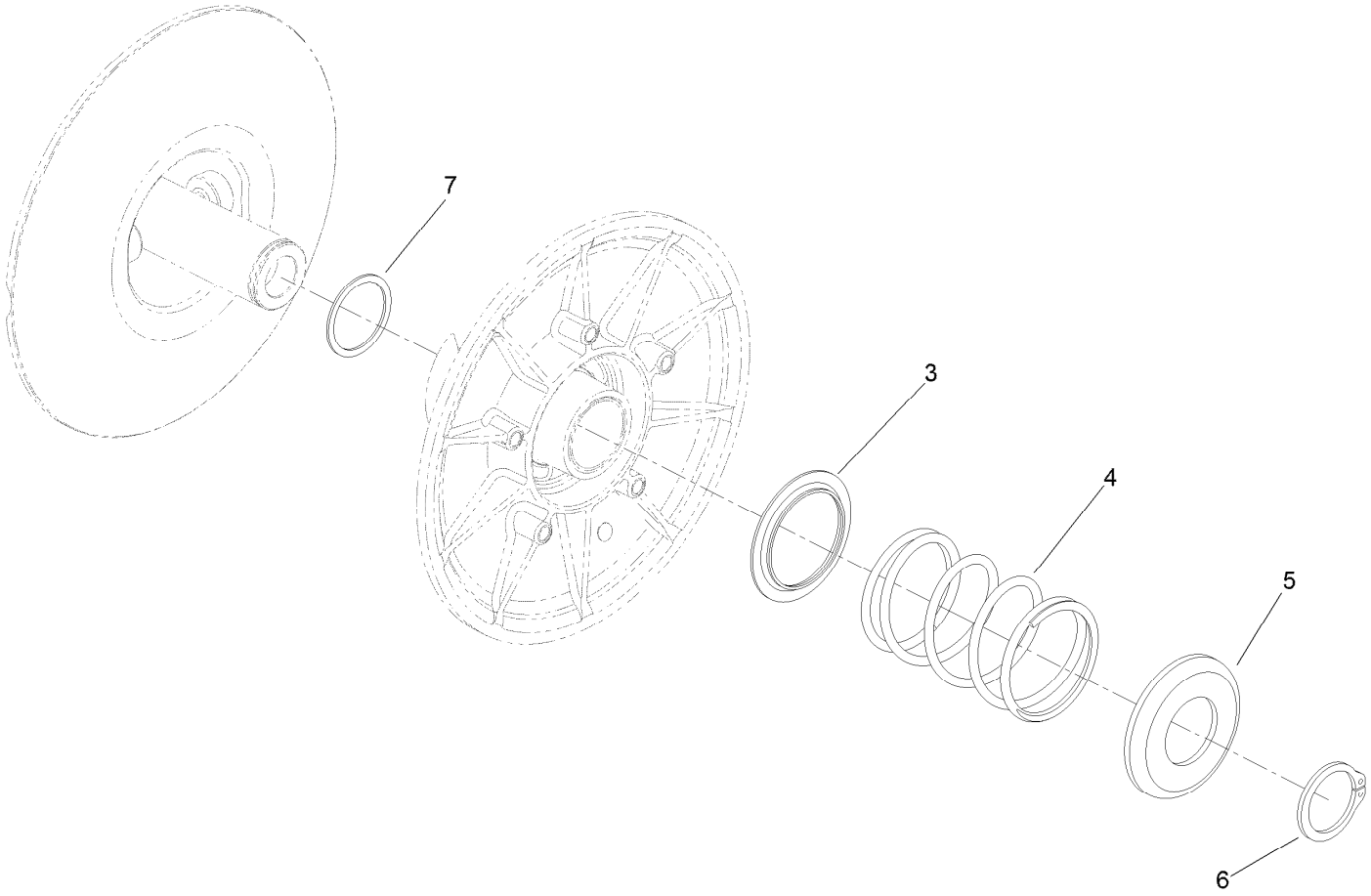

Secondary Clutch Assembly No. 119-6011

Ref.	*Part Number*	*Qty.*	*Description*
3	119-0809	1	Cup-Spring Retainer, Inner
4	119-9360	1	Spring-Compression, Black/Almond
5	119-0810	1	Cup-Spring Retainer, Outer
6	119-0811	1	Ring-Retaining
7	119-6018	1	Shim-Thrust

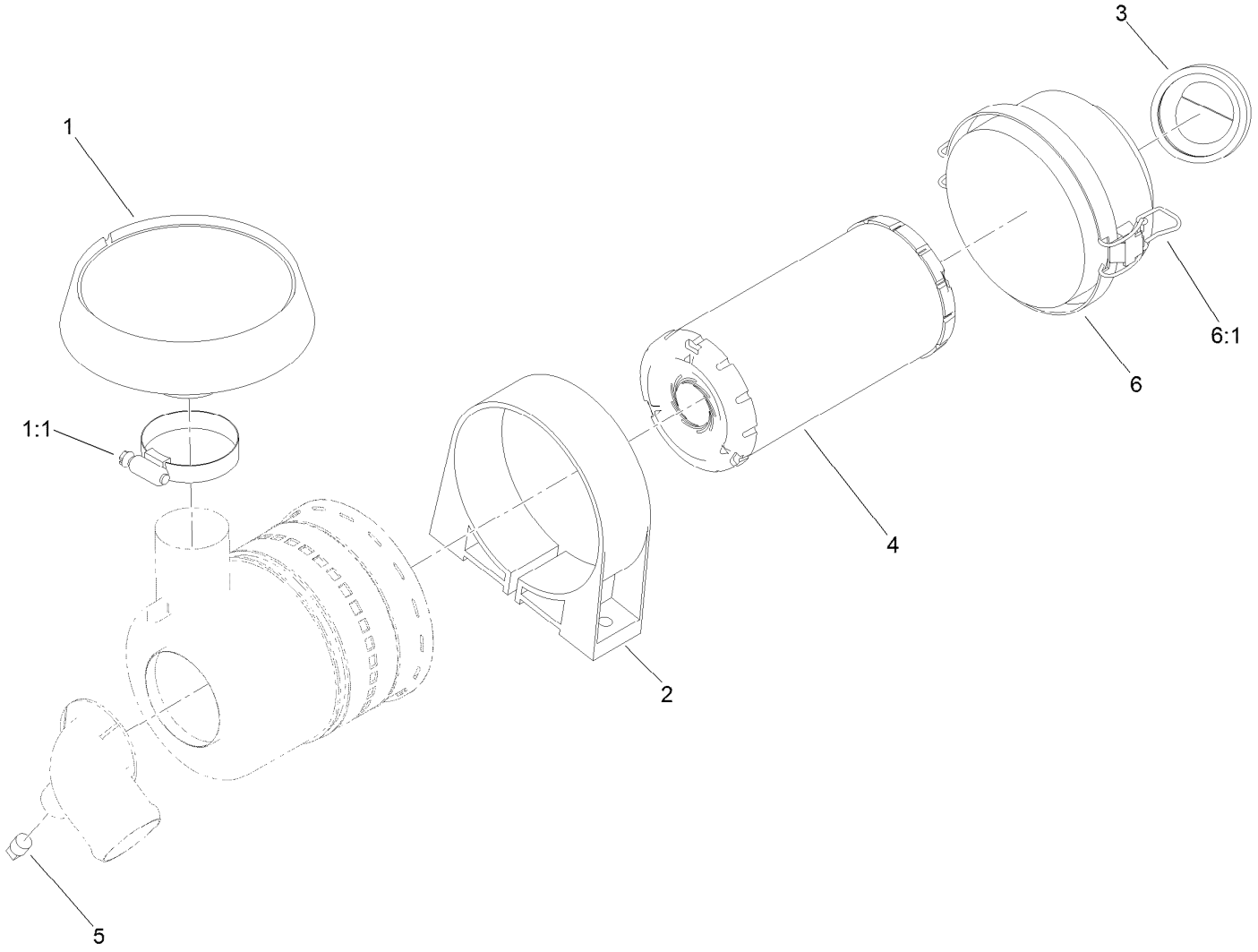

Air Cleaner Assembly No. 138-3447

Ref.	*Part Number*	*Qty.*	*Description*
1	136-7859	1	Rain Cap Kit
1:1	1-643009	1	Clamp-Hose
2	95-5806	1	Bracket-Mounting, Air Cleaner
3	87-9400	1	Valve-Vacuator
4	108-3811	1	Filter-Air
5	281-7	1	Cap-Pipe
6	94-3652	1	Cover ASM
6:1	1-643283	2	Latch-Cleaner, Air

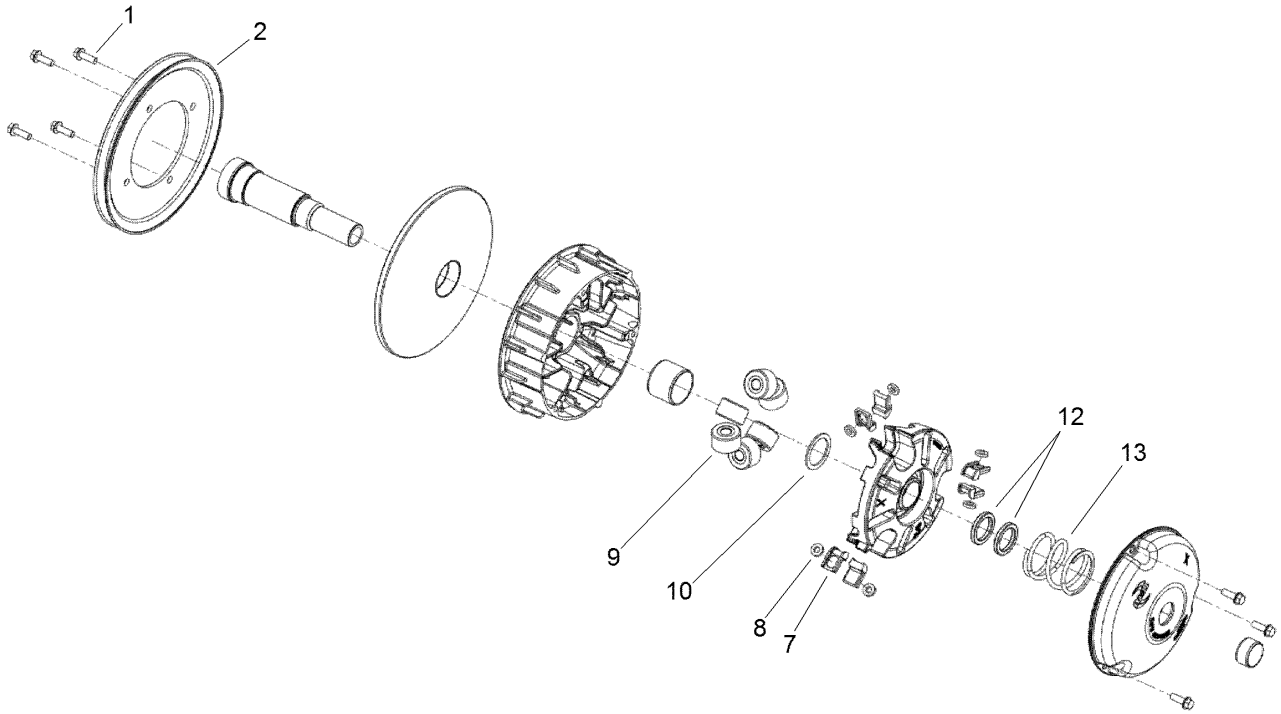

Primary Clutch Assembly No. 138-0095

Ref.	*Part Number*	*Qty.*	*Description*
1	49-2040	7	Screw-HWHTF
2	119-0813	1	Pulley-Primary
7	127-8689	6	Button-Primary, Torque
8	127-8690	6	Plug-Button, Torque
9	119-0804	6	Weight-Roller
10	119-0812	1	Shim-Spider
12	119-0807	2	Shim-Limiter
13	119-9532	1	Spring-Red/White

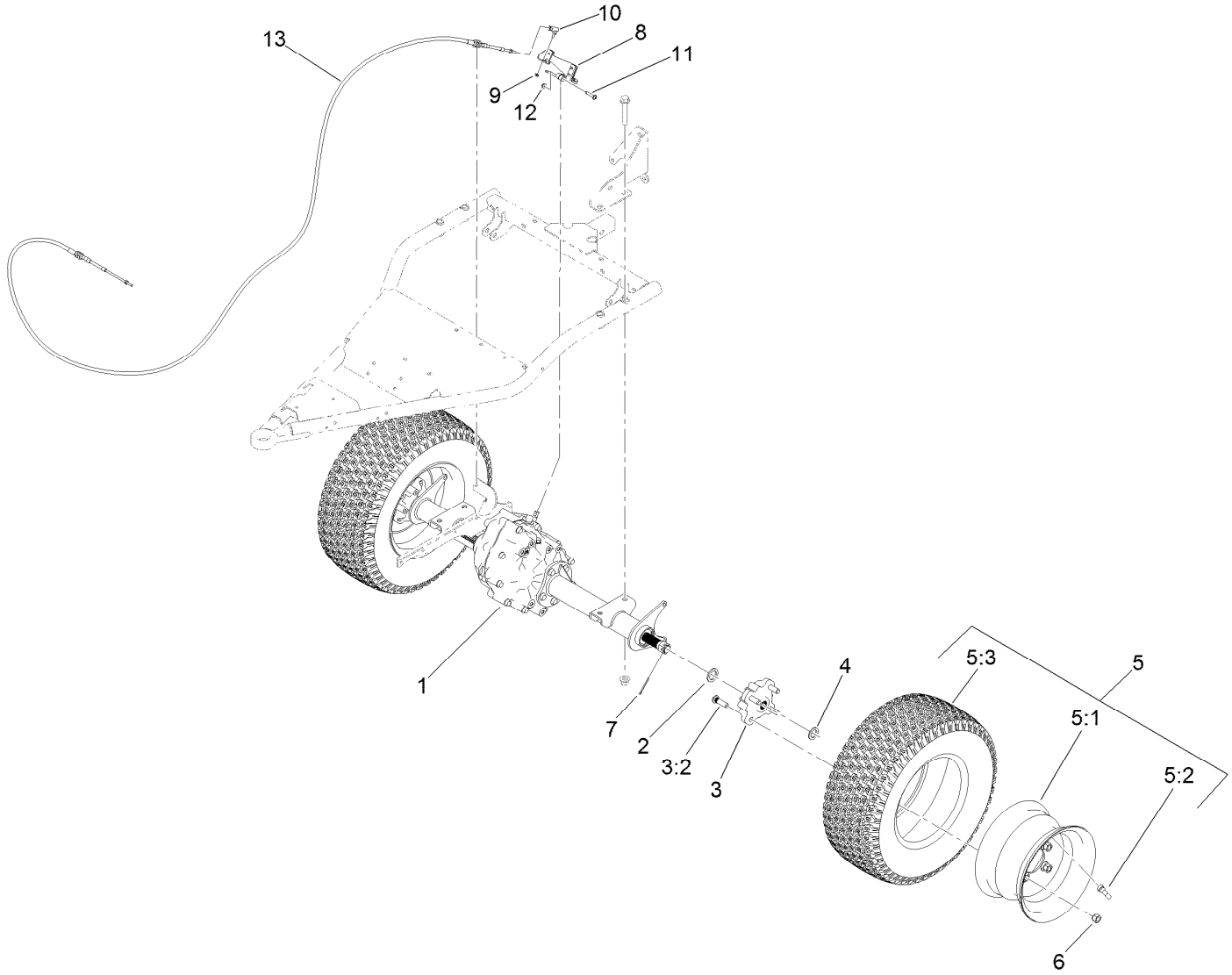

Rear Wheel and Transaxle Assembly

Ref.	Part Number	Qty.	Description
1	131-3486	1	Transaxle
2	131-8570	2	Spacer-Hardened
3	127-8848	2	Rear Hub ASM
3:2	10-6830	4	Stud-Type, Drive
4	3-7898	2	Washer-Thrust
5	139-4495	2	Wheel And Tire ASM
5:1	131-8317	1	Wheel
5:2	232-27	1	Stem-Valve
5:3	139-4475	1	Tire-20 X 8.00-10

Ref.	Part Number	Qty.	Description
6	242-50	8	Nut-Lug
7	1-806800	2	Pin-Cotter
8	133-7260-03	1	Arm-Shift
9	3296-27	1	Nut-Lock, NI
10	2411-38	1	Joint-Ball
11	132-6777	1	Screw-TTH
12	104-7201	1	Nut-HF
13	127-8897	1	Cable-Shift

Transaxle Assembly No. 131-3486

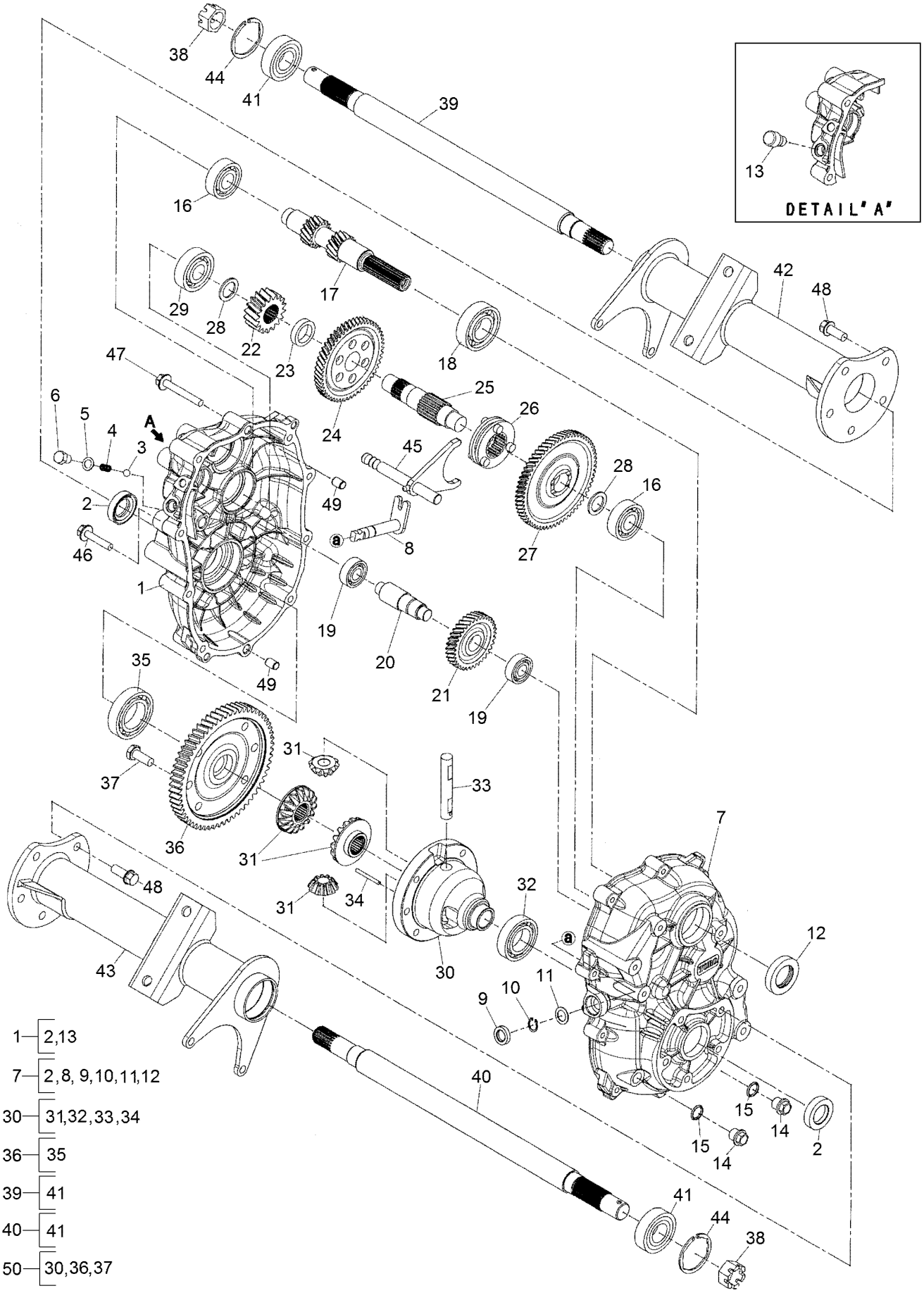

Transaxle Assembly No. 131-3486 (continued)

Ref.	Part Number	Qty.	Description
1	133-2400	1	Case-LH
2	133-2401	2	Seal-Oil
3	104-1660	1	Ball-Steel
4	104-1661	1	Spring
5	104-1662	1	Gasket
6	104-1663	1	Bolt
7	133-2402	1	Case-RH
8	133-2403	1	Shaft-Select
9	133-2446	1	Seal-Oil
10	133-2404	1	Ring-Snap
11	133-2405	1	Spacer
12	104-1607	1	Seal-Oil
13	133-2406	1	Breather-Air
14	133-2407	2	Plug-Drain, Oil
15	133-2408	2	Gasket
16	133-2409	2	Bearing-Ball
17	133-2410	1	Shaft-Input
18	133-2411	1	Bearing-Ball
19	133-2412	2	Bearing-Ball
20	133-2413	1	Shaft-Counter
21	133-2414	1	Gear
22	133-2415	1	Gear
23	133-2416	1	Collar
24	133-2417	1	Gear
25	133-2418	1	Shaft-Center

Ref.	Part Number	Qty.	Description
26	133-2419	1	Clutch-Pin
27	133-2420	1	Gear
28	133-2421	2	Spacer
29	133-2422	1	Bearing-Ball
30	133-2423	1	Case-Differentail
31	133-2424	1	Set-Gear, Differential
32	133-2425	1	Bearing-Ball
33	104-1644	1	Shaft-Differential
34	104-1645	1	Pin
35	133-2426	1	Bearing-Ball
36	133-2427	1	Gear
37	104-1649	6	Bolt
38	133-2428	2	Nut-Castle
39	133-2429	1	Shaft-Axle, LH
40	133-2430	1	Shaft-Axle, RH
41	133-2431	2	Bearing-Ball
42	133-2432	1	Case-Axle, LH
43	133-2433	1	Case-Axle, RH
44	133-2434	2	Ring-Snap
45	133-2435	1	Shaft-Shift
46	133-2436	1	Bolt-Flange
47	133-2437	9	Bolt-Flange
48	133-2438	10	Bolt-Flange
49	133-2439	2	Pipe-Knock
50	133-2440	1	Differential ASM

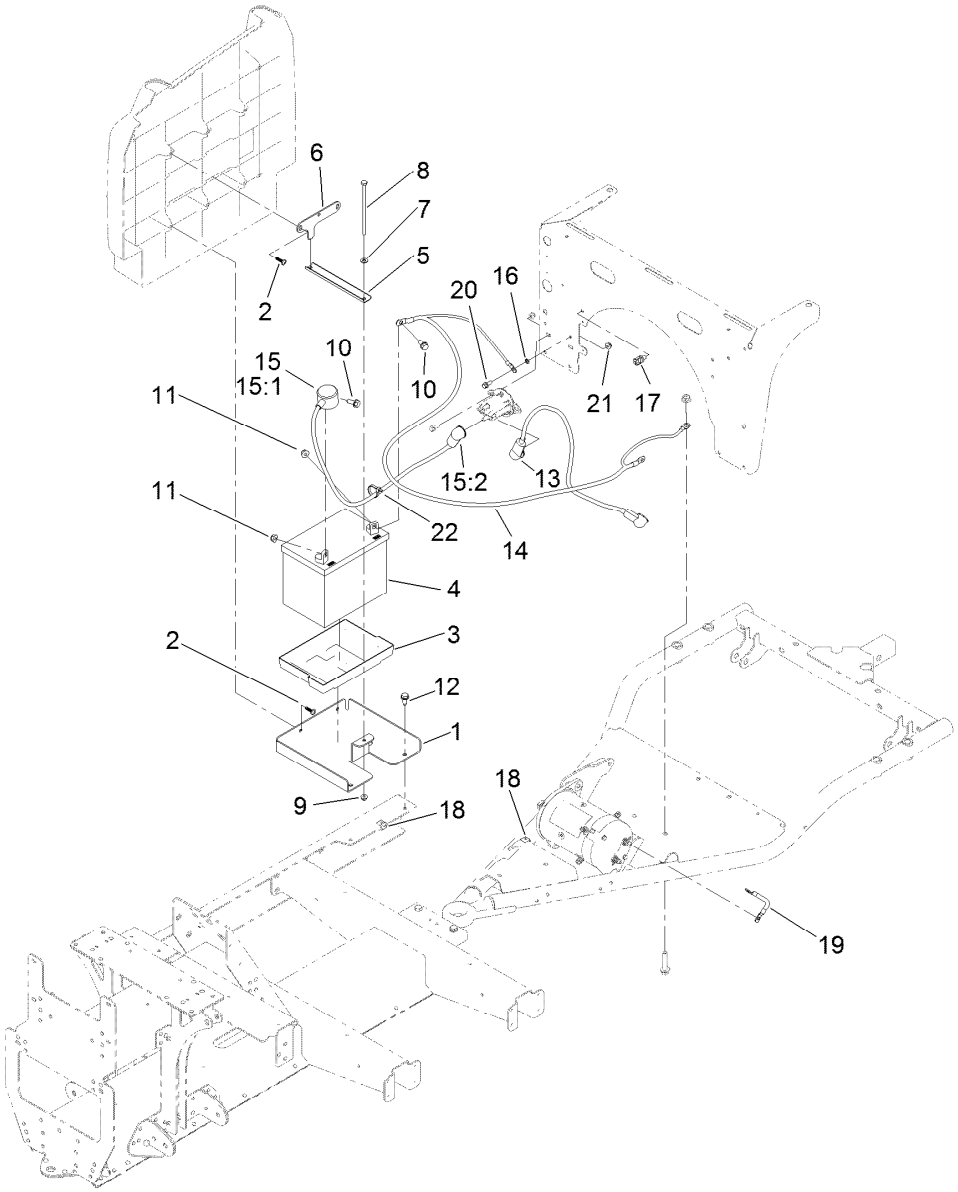

Battery and Cable Assembly

Ref.	Part Number	Qty.	Description
1	127-7810-03	1	Base-Battery
2	120-2349	4	Screw
3	106948	1	Tray-Battery
4	104-8162	1	Battery
5	127-7816-03	1	Channel-Clamp, Battery
6	127-7814-03	1	Plate-Clamp, Battery
7	3256-22	1	Washer-Flat
8	321-47	1	Screw-HH
9	104-7201	1	Nut-HF
10	3234-5	2	Screw-HHF
11	104-8300	2	Nut-HF, NI
12	32144-70	2	Screw-HWHTF
13	122-0639	1	Cable-Battery, Positive
14	122-0638	1	Cable-Battery, Negative

Ref.	Part Number	Qty.	Description
15	109-7621	1	Positive Battery Cable ASM
15:1	1-543393	1	Insulator-Solenoid
15:2	109-2407	1	Insulator-Battery
16	3255-7	1	Washer-Lock/EXT
17	32180-030	1	Clip-Tie
18	32180-082	3	Clip-Edge W/Tie, Perpendicular
19	122-1176	1	Cable-Battery, Negative
20	3234-33	1	Screw-HHF
21	104-7201	1	Nut-HF
22	3290-378	1	Tie-Cable
99	107-0392	1	Protection-Terminal, Aerosol ●

● Not illustrated

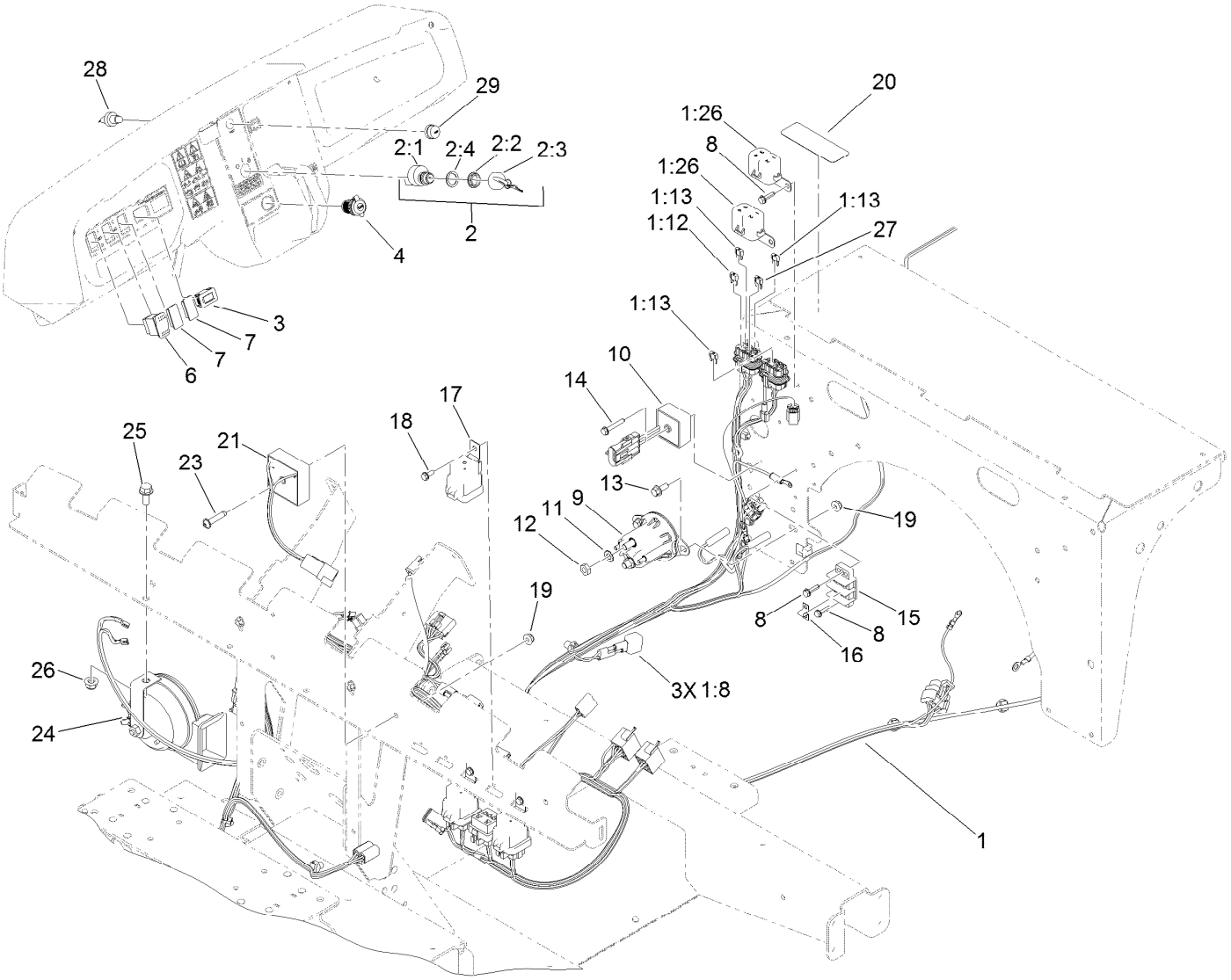

Electrical Assembly

Ref.	Part Number	Qty.	Description
1	122-1473	1	Harness-Wire, Main
1:8	100-4918	3	Diode
1:12	121-8867	1	Fuse-Mini Blade, 15 Amp
1:13	121-8866	3	Fuse-Mini Blade, 10 Amp
1:14	32160-093	1	Connector-Mp280, 2M ●
1:23	32180-056	1	Cap ●
1:24	32180-156	1	Cap-Plug, 6 Way ●
1:26	32180-179	2	Cover-Bussman
2	122-1145	1	Ignition Switch ASM
2:1		1	Switch-Ignition ■
2:2	108-8660	1	Nut-Mounting
2:3	106-5270	1	Ignition Key Set
2:4	108-8659	1	Washer-Backup
3	120-2244	1	Hourmeter
4	131-8388	1	Socket-USB
6	95-8999	1	Switch
7	99-7420	2	Plug-Hole
8	100-4351	5	Screw-HWH

Ref.	Part Number	Qty.	Description
9	114-3315	1	Solenoid
10	119-9492	1	Regulator-Voltage
11	3255-8	2	Washer-Lock
12	3220-2	2	Nut-Jam
13	3234-33	2	Screw-HHF
14	100-4352	1	Screw-HWH
15	42862	1	Block-Terminal, Ground
16	42863	1	Strip-Jumper
17	99-7430	3	Relay-Mini
18	32144-1	3	Screw-Taptite
19	104-7201	4	Nut-HF
20	139-3340	1	Decal-Fuse Block, EFI
21	138-0085	1	Timer-Delay, 30 Sec (1 Amp)
23	132-6777	1	Screw-TTH
24	110-2594	1	Horn
25	3234-5	1	Screw-HHF
26	104-8300	1	Nut-HF, NI

● Not illustrated

■ Not serviced separately

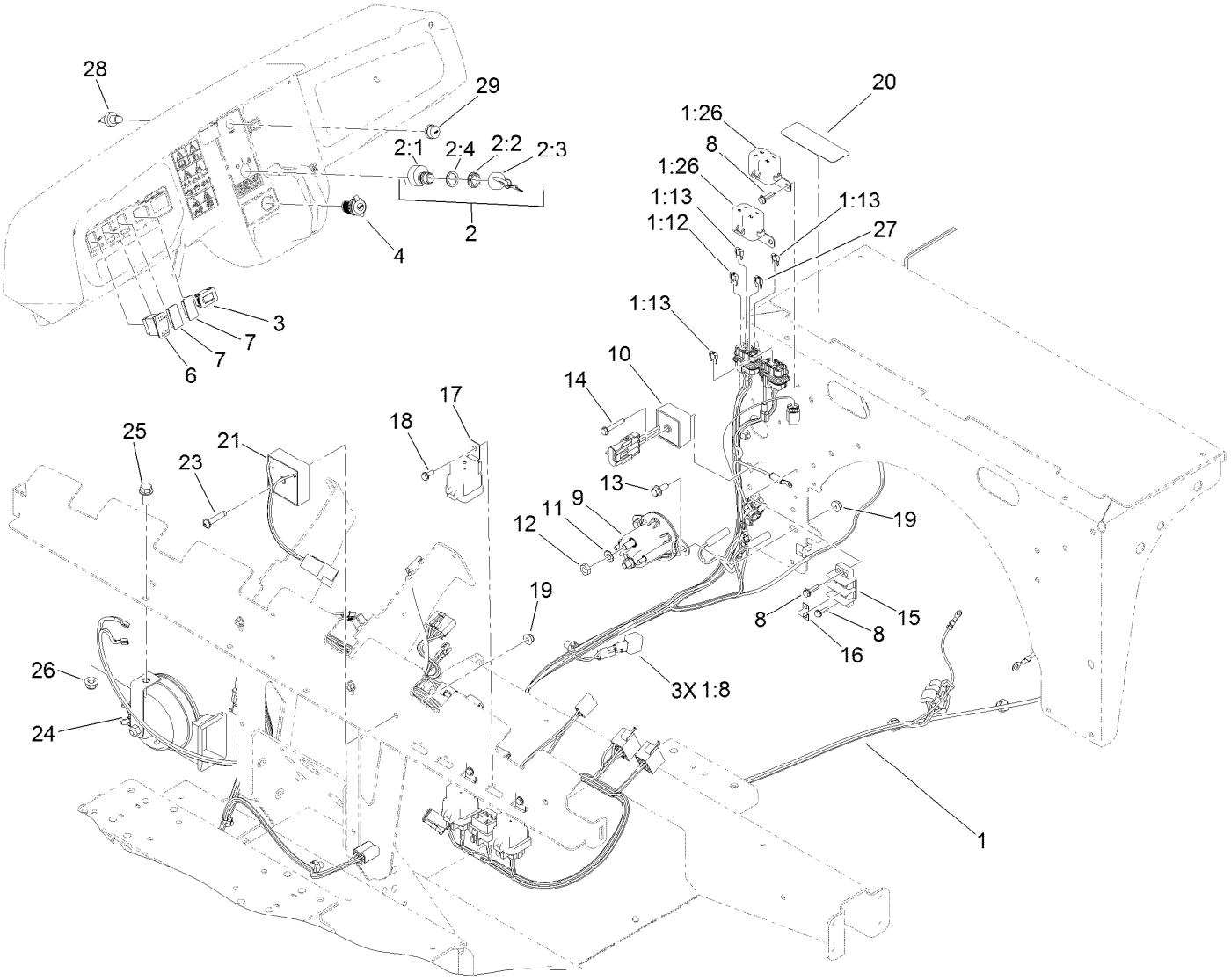

Electrical Assembly (continued)

Ref.	Part Number	Qty.	Description
27	121-8870	1	Fuse-Mini Blade, 30 Amp

Ref.	Part Number	Qty.	Description
28	112-3324	1	Switch-Horn
29	112-3313	1	Nut-Weatherproof

● Not illustrated

■ Not serviced separately

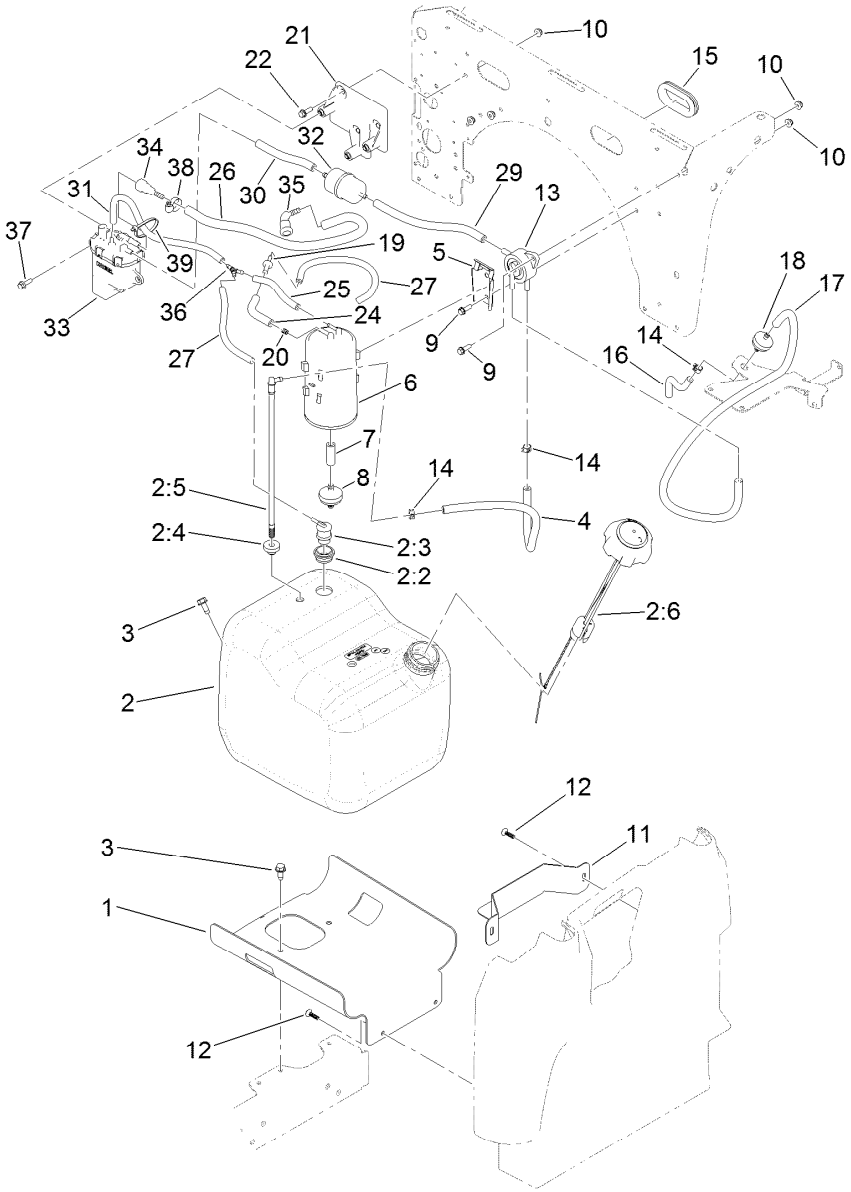

Fuel System Assembly

Ref.	Part Number	Qty.	Description
1	127-7739-03	1	Mount-Tank, Fuel
2	127-7849	1	Fuel Tank ASM
2:2	114-0284	1	Grommet
2:3	114-0285	1	Valve-Rollover
2:4	46-6560	1	Bushing
2:5	115-9044	1	Pipe-Stand
2:6	131-8357	1	Cap-Gauge
3	32144-70	3	Screw-HWHTF
4	114-4428	1	Hose-Fuel
5	114-0292	1	Bracket-Canister, Carbon
6	127-8685	1	Canister-Carbon
7	106-5317	1	Hose-Fuel
8	115-7854	1	Filter-Fuel, Inline
9	32105-15	4	Screw-HWH
10	104-7201	7	Nut-HF
11	127-7845-05	1	Bracket-Fuel Tank
12	120-2349	4	Screw
13	131-8526	1	Pump-Fuel
14	2412-98	8	Clamp-Hose
15	240-12	1	Grommet-Rubber

Ref.	Part Number	Qty.	Description
16	140-4825	1	Hose-Pulse (.212 X 5.00, J200, LP)
17	109-3491	1	Hose-Fuel
18	56-6360	1	Filter-Fuel
19	117-5399	1	Adaptor-Orifice
20	120-2038	1	Cartridge-Valve, Check
21	136-6346	1	Bracket-Pump, Fuel
22	115-5103	3	Screw-HHF
24	114-3765	1	Hose-Fuel
25	68-3632	1	Hose-Fuel
26	136-6343	1	Hose-Fuel
27	136-6345	2	Hose-Fuel
29	109-0282	1	Hose-Fuel
30	109-0650	1	Hose-Fuel
31	136-6344	1	Hose-Fuel
32	94-9695	1	Filter-Fuel
33	136-6347	1	Pump-Fuel, EFI
34	125-2921	1	Fitting-Fuel
35	121-5585	1	Fitting-Fuel
36	136-6339	1	Fitting-Fuel
37	33103-020	3	Screw-HHF

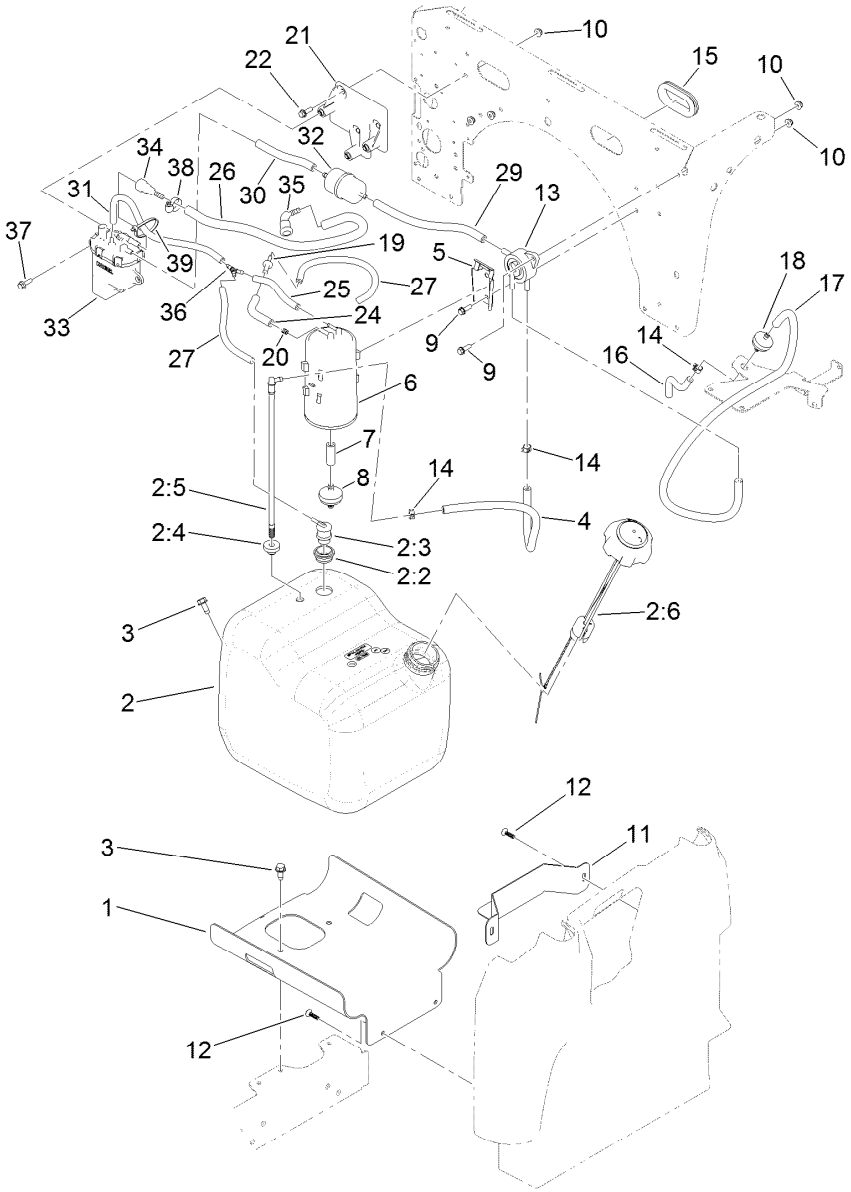

Fuel System Assembly (continued)

Ref.	Part Number	Qty.	Description
38	2412-36	2	Clamp-Hose
39	3290-378	1	Tie-Cable

Attachments and Accessories

For 07409 Workman GTX EFI Utility Vehicle

Product Name	Model/Part
Workman GTX 2-Person Canopy	07921
12V Electric Lift Kit	07144
Brush Guard Kit	07145
Front Hitch Kit, Workman GTX Series Utility Vehicles with Brush Guard	07146
Front Hitch Kit, Workman GTX or MDX Series Utility Vehicles without Brush Guard	07147
Steel Flat Bed Kit	07148
Storage Box Kit	07156
Brake and Signal Light Kit	132-8579
Walk Spreader Mounting Kit	07029
6in L-Track Kit	07158
2in L-Track Kit	07159
Hose Reel Mounting Kit	07027
Aggressive Tire Kit	07423
Horn Kit	133-3016
Reverse Alarm Kit	133-3018
Power Point Kit	131-8550
Parking Brake Alarm Kit	133-3019
Trash Can Mounting Kit	07028
Spark Arrestor Screen Kit	133-7109
Bed Rack Kit	07031
Cab Kit	07142
Mount-Ball	133-7116
Road Light and Homologation Kit	133-7128
12V Electric Bed Lift Kit	07167
Tire-20 8.00-10	116-7333
MVP Kit 400 Hour	136-6280
Cab Mount Kit, Workman GTX Utility Vehicle with Extended Flatbed	133-7198
Service Hood ASM	133-7209
ROPS Kit	07032
Cargo Bed Kit	07046
Bench Seat Base Kit	07047
Bucket Seat Base Kit	07048
Extension Kit	07049
Small Bedrack Mount Grip Kit	136-6311
Large Bedrack Mount Grip Kit	136-6312
Wireless Hourmeter Kit	136-6323
Plate-Skid	137-2886-03
Switch-Ignition ASM, Key1	138-3500
Switch-Ignition ASM, Key2	138-3501
Switch-Ignition ASM, Key3	138-3502
Switch-Ignition ASM, Key4	138-3503
Switch-Ignition ASM, Key5	138-3504
Glove Box Cover Kit	137-2883
Fold-Down Rear Facing Seat	07123
Door Mount Mirror Kit	136-1997
Lift Kit	07414

Attachments and Accessories (continued)

Tire/Wheel Asm 131-8319
Van Box 07440
Folding Windshield Kit, Workman GTX Utility Vehicle with Canopy 07923
Tire 94-5236
Shim-Limiter 119-0807
Exterior Mirror Kit 130-5448
Interior Mirror Kit 130-5449
Beacon Kit 130-5484
Work Light Kit 130-5485
Windshield Washer Fluid Kit, 2015 and after Workman MD/HD Series Utility Vehicle 130-5615
Small Seat Cover 131-6690
Wide Angle Mirror Kit 133-1009
Wide Angle Mirror Kit 133-1038
Bracket-Mount, Radio 133-7111-03
GTX Ball Cage ROPS, Certified 07161
Canopy W/ ROPS 07169
Canopy Mount Kit, Workman GTX Utility Vehicle with Extended Flatbed 07199
Full Shelf For Van Box 07441

Notes:

TORO®

Count on it.