Form No. 3442-971 Rev A

TORO®

Count on it.

Parts Catalog

# Workman® GTX

## Electric Utility Vehicle with Extended Chassis

**Model No. 07412EX—Serial No. 407700000 and Up**

Register at www.Toro.com.
Original Instructions (EN)

*3442-971* A

# Ordering Replacement Parts

To order replacement parts, please supply the part number, the quantity, and the description of each part desired.

### Understanding Reference Numbers

Each identified part in an illustration has a reference number. The reference number for a part also appears in the parts list, along with other information about the part.

This catalog uses two special reference number formats, one to indicate parts in a service assembly and another to indicate the quantity of a given part in an illustration.

### Service Assembly Reference Numbers

Parts in service assemblies have reference numbers in the form a:b. The a represents the reference number of the entire service assembly and the b represents a sequential number unique to each part within the service assembly.

For example, a wheel assembly might be identified by reference number 6, the tire by 6:1, the valve by 6:2, and the wheel by 6:3. When you order the assembly identified by reference number 6, you receive all parts identified by reference numbers 6:1,6:2, and 6:3. However, you may also order any part individually. Reference numbers of this type appear in illustration and in parts lists.

### Reference Numbers Indicating Quantity

In an illustration, if a reference number indicates more than one part, the reference number has the form nX y. The n represents the quantity of the part, the X is the multiplication symbol, and the y represents the reference number.

For example, in an illustration, the reference number 2X 37 means that two of the parts identified by reference number 37 are indicated.

# Contents

Front Frame and Suspension Assembly . . . 4
Floor Plate and Rear Suspension Mount Assembly . . . 5
Rear Frame and Suspension Assembly . . . 6
Frame Mount and Rear Shock/Spring Assembly . . . 7
Brake Assembly . . . 8
Master Cylinder Assembly No. 104-6782 . . . 9
Brake Caliper Assembly No. 140-2575 . . . 10
Steering Assembly . . . 11
Pedal and Control Assembly . . . 12
Hood and Fender Assembly . . . 13
Dash Assembly . . . 14
Seatbase Assembly . . . 15
Cargo Bed Assembly . . . 16
Battery Assembly . . . 17
Rear Axle and Motor Assembly . . . 18
Transaxle Assembly No. 136-6340 . . . 19
Electric Motor Assembly No. 137-6936 . . . 20
Controller Assembly . . . 21
Sevcon Controller Assembly No. 137-9898 . . . 23
Onboard Charger Assembly No. 131-8490 . . . 24
Accelerator Pedal and Key Switch Assembly . . . 25
Attachments and Accessories . . . 26

**© 2021—The Toro® Company**
**8111 Lyndale Avenue South**
**Bloomington, MN 55420**



**Contact us at www.Toro.com.**
**Printed in the USA.**
**All Rights Reserved**

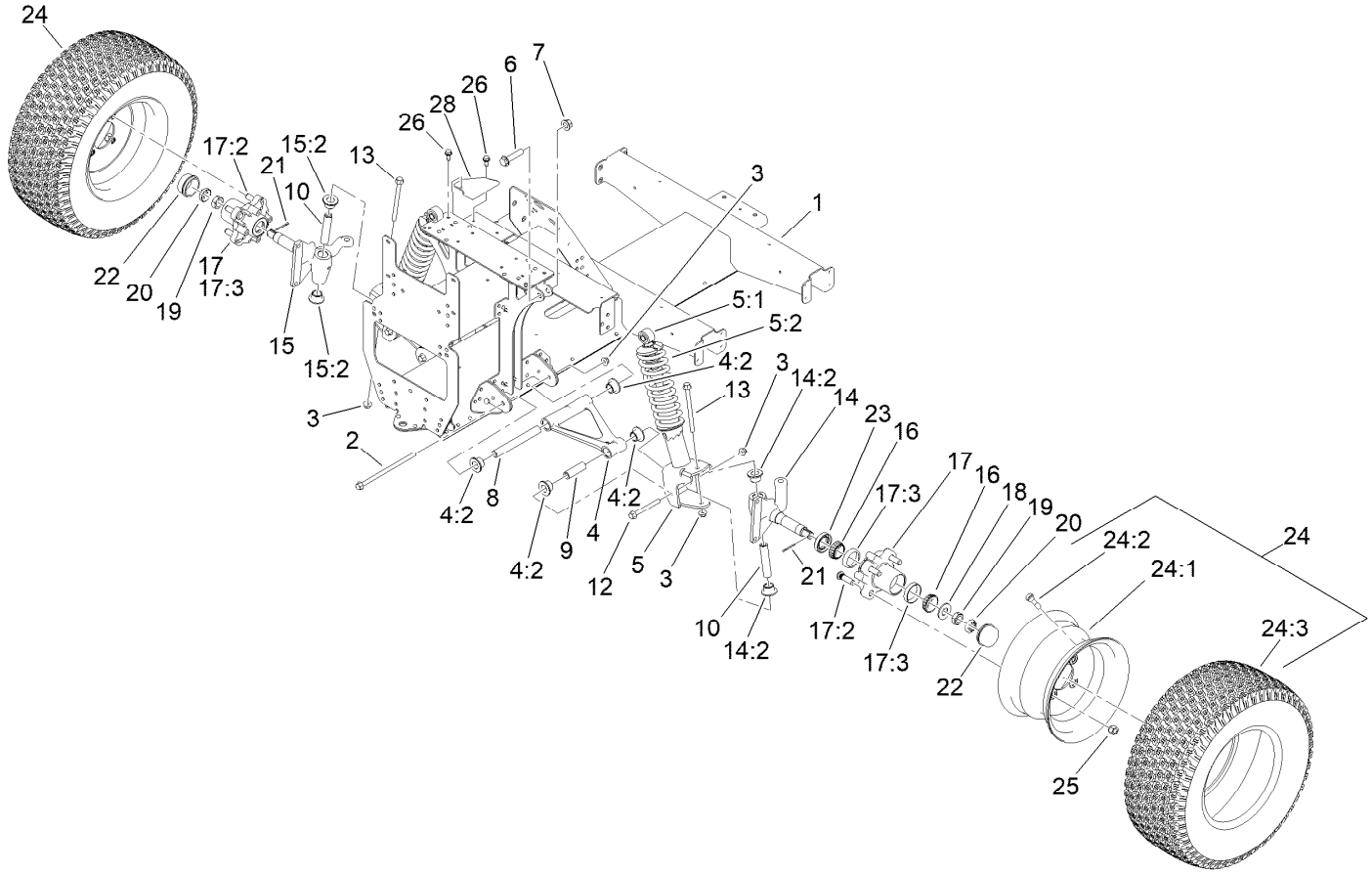


# Front Frame and Suspension Assembly

| Ref. | Part Number | Qty. | Description |
|---|---|---|---|
| 1 | 127-7718-03 | 1 | Frame-Front |
| 2 | 139-3360 | 2 | Screw-HF |
| 3 | 139-3380 | 6 | Nut-HF |
| 4 | 144-2161 | 2 | Control Arm ASM |
| 4:2 | 140-4615 | 4 | Bushing-Flange |
| 5 | 139-4484 | 2 | Strut ASM, 250 Lb (16.33" EXT Length) |
| 5:1 | 131-8574 | 1 | Isolator-Shock |
| 5:2 | 137-6719 | 1 | Spring-Compression, 250Lb |
| 6 | 3234-46 | 2 | Screw-HHF |
| 7 | 99-5107 | 2 | Nut-Lock |
| 8 | 131-8581 | 2 | Sleeve-Control Arm, Inner |
| 9 | 131-8583 | 2 | Sleeve-Control Arm, Outer |
| 10 | 131-8582 | 2 | Sleeve-Kingpin |
| 12 | 139-3370 | 2 | Screw-HF |
| 13 | 139-3350 | 2 | Screw-HF |
| 14 | 144-2162 | 1 | Spindle ASM, LH |
| 14:2 | 140-4615 | 2 | Bushing-Flange |
| 15 | 144-2163 | 1 | Spindle ASM, RH |
| 15:2 | 140-4615 | 2 | Bushing-Flange |
| 16 | 254-94 | 4 | Bearing-Cone, Tapered |
| 17 | 127-8851 | 2 | Front Hub ASM |
| 17:2 | 10-6830 | 4 | Stud-Type, Drive |
| 17:3 | 254-72 | 2 | Bearing-Cup, Tapered |
| 18 | 93-0309 | 2 | Washer-Tab |
| 19 | 3220-7 | 2 | Nut-Jam |
| 20 | 93-0307 | 2 | Nut-Lock, Retainer |
| 21 | 3272-12 | 2 | Pin-Cotter |
| 22 | 241-119 | 2 | Cap-Dust |
| 23 | 112-1690 | 2 | Seal-Oil |
| 24 | 139-4495 | 2 | Wheel And Tire ASM |
| 24:1 | 131-8317 | 1 | Wheel |
| 24:2 | 232-27 | 1 | Stem-Valve |
| 24:3 | 139-4475 | 1 | Tire-20 X 8.00-10 |
| 25 | 242-50 | 8 | Nut-Lug |
| 26 | 32144-70 | 2 | Screw-HWHTF |
| 28 | 131-8339-03 | 1 | Reinforcement-Tower |

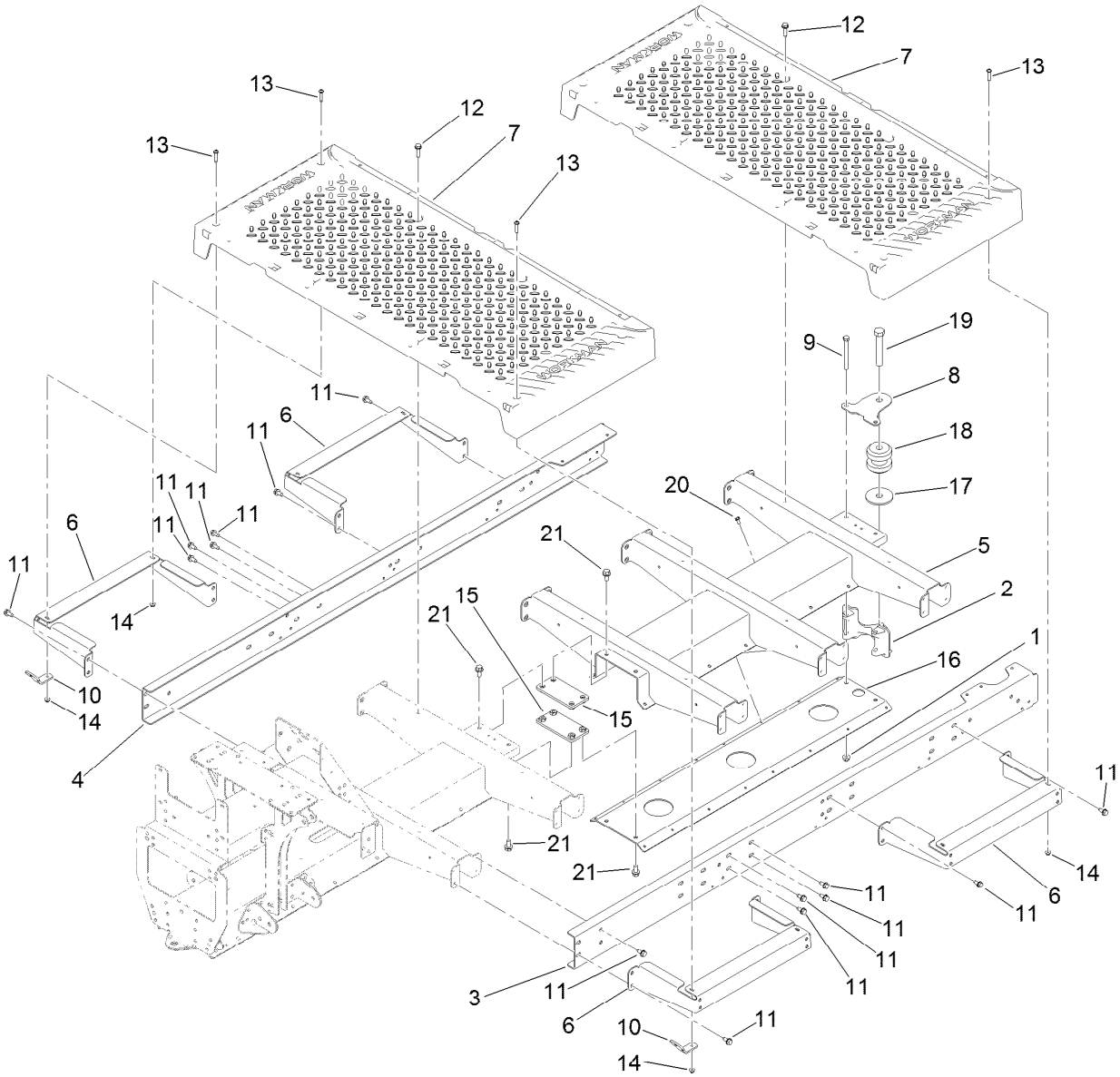


# Floor Plate and Rear Suspension Mount Assembly

| Ref. | Part Number | Qty. | Description |
|---|---|---|---|
| 1 | 104-8301 | 2 | Nut-HF, NI |
| 2 | 131-8466 | 1 | Mount-Suspension, Rear |
| 3 | 127-7823-03 | 1 | Channel-Extended, LH |
| 4 | 127-7824-03 | 1 | Channel-Extended, RH |
| 5 | 127-7828-03 | 1 | Channel-Extension |
| 6 | 127-7837-03 | 4 | Bracket-Support, Floor Plate |
| 7 | 127-7829 | 2 | Plate-Floor |
| 8 | 131-8597 | 1 | Plate-Gimbal, Upper |
| 9 | 323-42 | 2 | Screw-HH |
| 10 | 127-7832 | 2 | Bracket-Angle |
| 11 | 32144-70 | 40 | Screw-HWHTF |

| Ref. | Part Number | Qty. | Description |
|---|---|---|---|
| 12 | 32144-49 | 8 | Screw-HWHTF |
| 13 | 132-6777 | 8 | Screw-TTH |
| 14 | 104-7201 | 8 | Nut-HF, NI |
| 15 | 131-8424 | 2 | Plate-Connection |
| 16 | 127-7827-03 | 1 | Plate-Channel, Extension |
| 17 | 110-4549 | 1 | Washer-Snubbing |
| 18 | 131-8480 | 1 | Isolator |
| 19 | 104-5877 | 1 | Screw-HH |
| 20 | 32144-4 | 16 | Screw-HWH |
| 21 | 3234-1 | 8 | Screw-HHF |

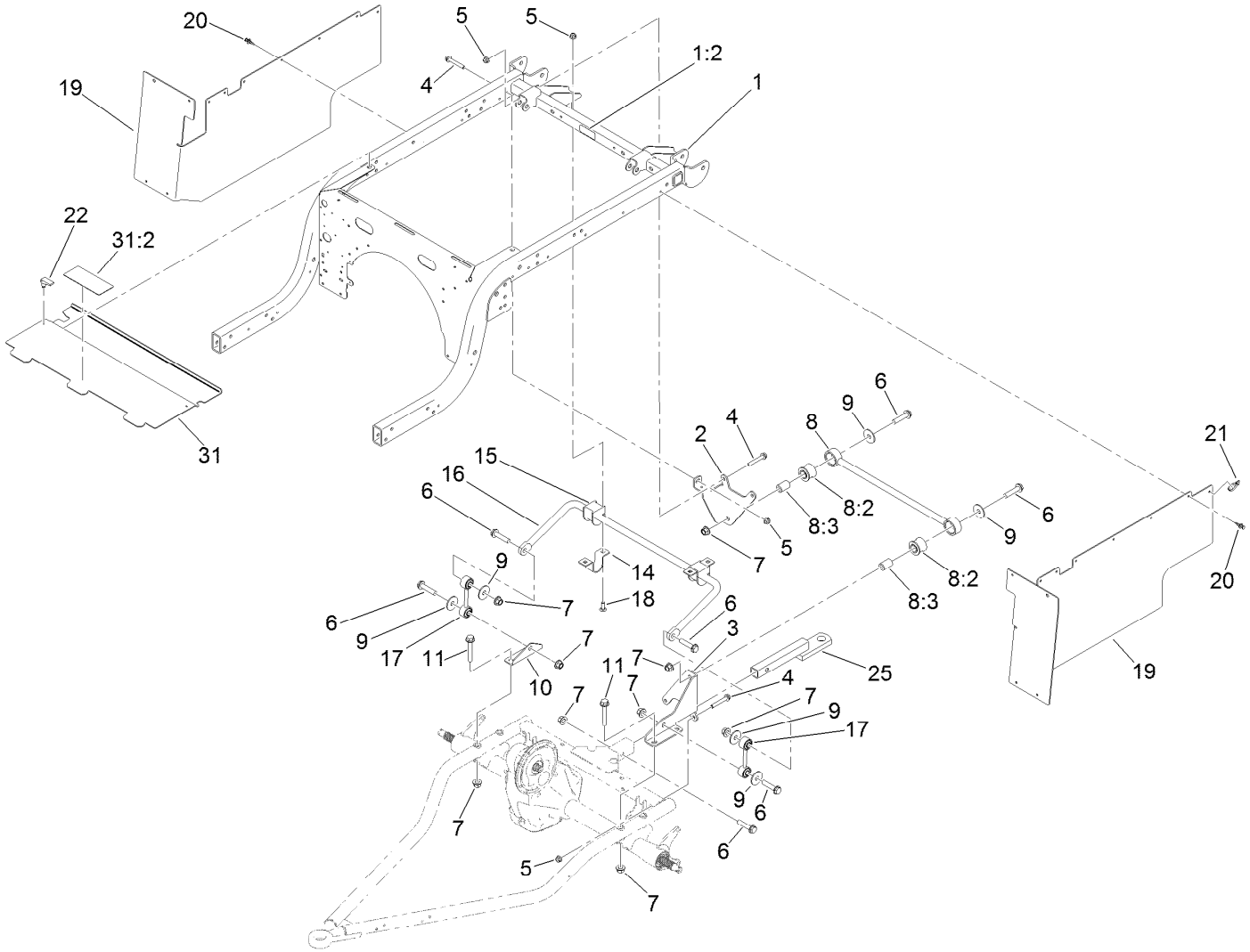


# Rear Frame and Suspension Assembly

| Ref. | Part Number | Qty. | Description |
|---|---|---|---|
| 1 | 140-2498 | 1 | Rear Frame ASM |
| 1:2 | 115-2047 | 1 | Decal-Surface, Hot |
| 2 | 139-4647-03 | 1 | Bracket-Stabilizer Bar |
| 3 | 127-7411-03 | 1 | Bracket-Bar, Stabilizer |
| 4 | 3234-39 | 5 | Screw-HHF |
| 5 | 104-8301 | 9 | Nut-HF, NI |
| 6 | 3234-46 | 7 | Screw-HHF |
| 7 | 99-5107 | 11 | Nut-Lock |
| 8 | 109-5013 | 1 | Panhard Rod ASM |
| 8:2 | 109-5009 | 2 | Bushing-Suspension, Rubber |
| 8:3 | 109-5010 | 2 | Spacer |
| 9 | 86-1990 | 6 | Washer-Thrust |
| 10 | 131-8315 | 1 | Bracket-Link, Sway Bar |
| 11 | 3234-40 | 4 | Screw-HF |
| 14 | 139-4644 | 2 | Clamp, Anti-Sway Bar |
| 15 | 87-3910 | 2 | Bushing-Rubber |
| 16 | 131-8310-03 | 1 | Bar-Sway, Anti |
| 17 | 131-8394 | 2 | Link-Bar, Sway |
| 18 | 3231-22 | 4 | Screw-CARR |
| 19 | 131-8346 | 2 | Panel-Side |
| 20 | 125-9622 | 20 | Rivet-Blind |
| 21 | 3290-378 | 2 | Tie-Cable |
| 22 | 74-5950 | 2 | Latch-Swell |
| 25 | 137-6741 | 1 | Ball Mount ASM |
| 31 | 140-4573 | 1 | Extended Panel-Cover |
| 31:2 | 99-7345 | 1 | Decal-Warning |

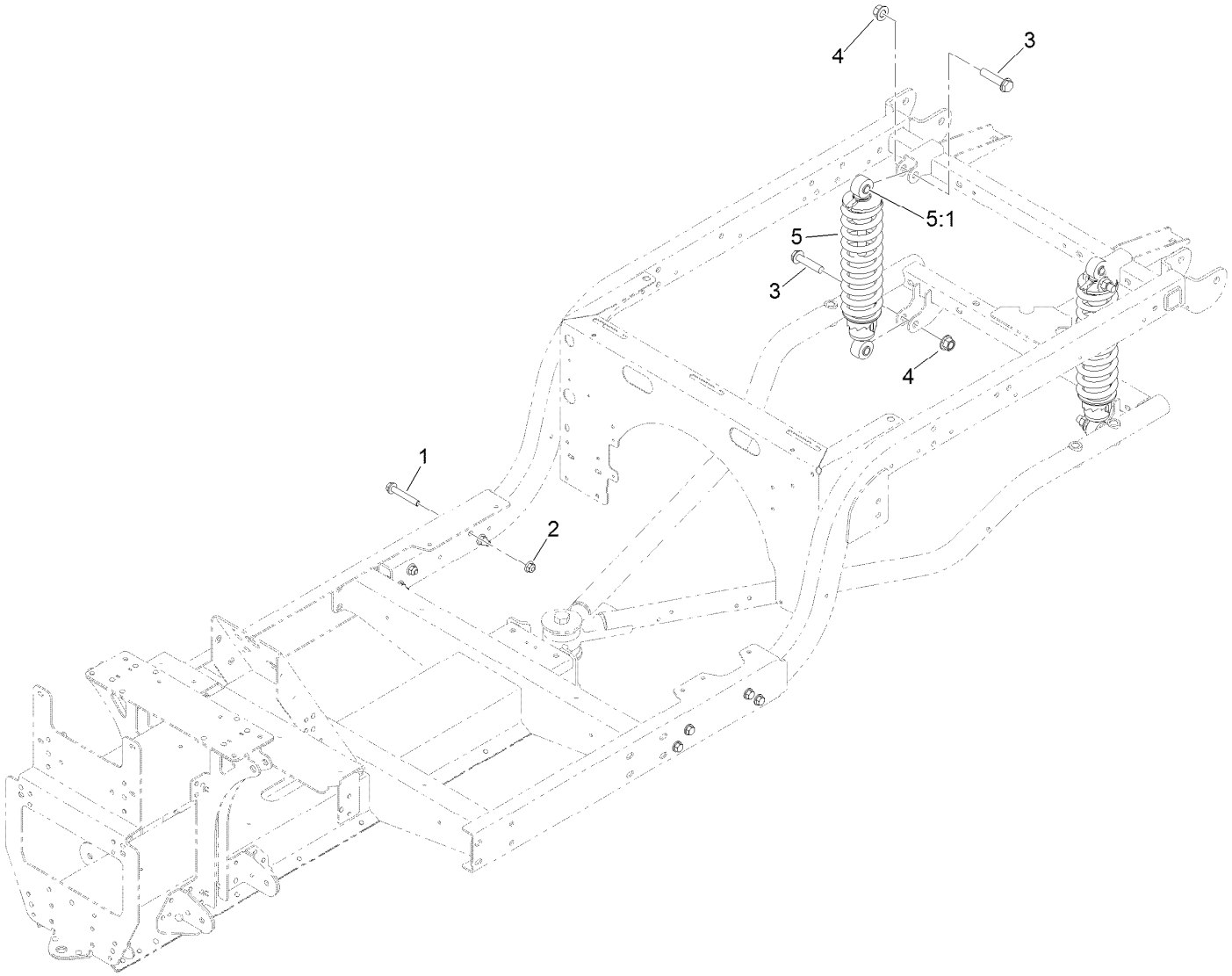


# Frame Mount and Rear Shock/Spring Assembly

| *Ref.* | *Part Number* | *Qty.* | *Description* |
|---|---|---|---|
| 1 | 3234-39 | 8 | Screw-HHF |
| 2 | 104-8301 | 8 | Nut-HF, NI |
| 3 | 3234-46 | 4 | Screw-HHF |
| 4 | 99-5107 | 4 | Nut-Lock |
| 5 | 139-4607 | 2 | Shock/Spring ASM |
| 5:1 | 131-8574 | 2 | Isolator-Shock |

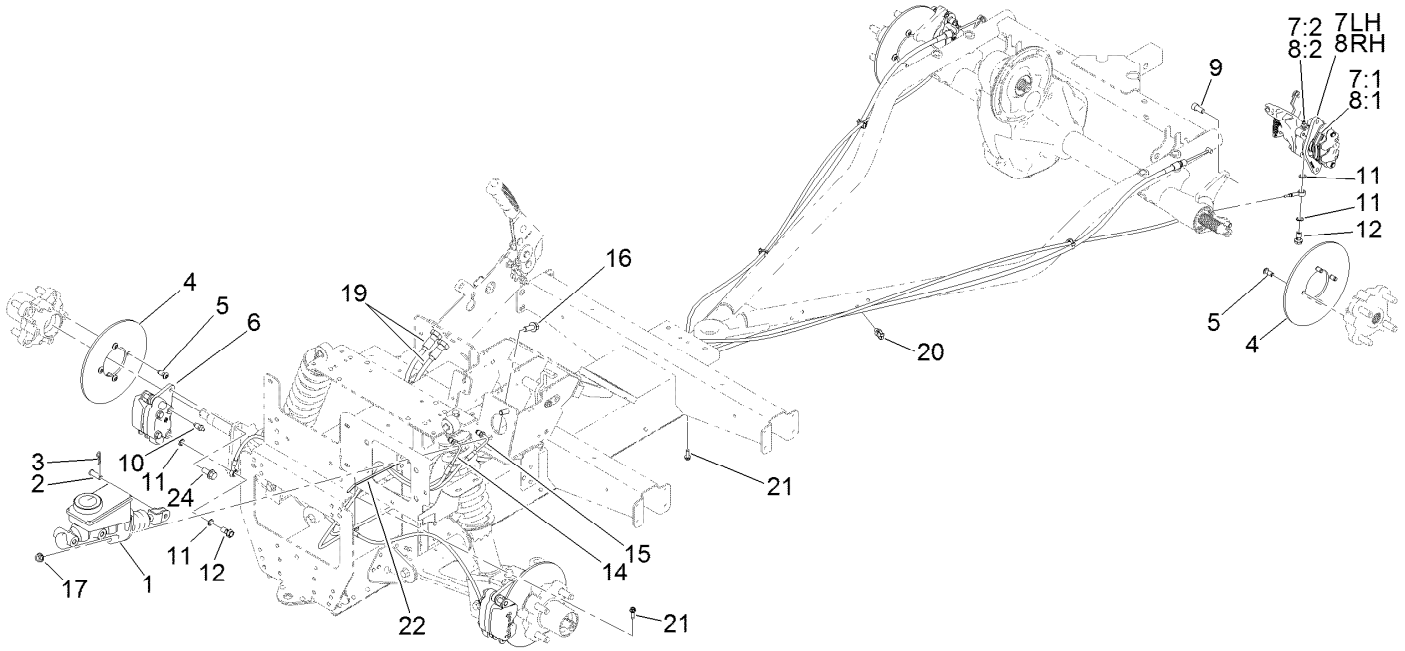


# Brake Assembly

| Ref. | Part Number | Qty. | Description |
|---|---|---|---|
| 1 | 104-6782 | 1 | Master Cylinder ASM |
| 2 | 283-2 | 1 | Pin-Clevis |
| 3 | 1-806003 | 1 | Pin-Cotter |
| 4 | 139-4474 | 4 | Rotor-Brake |
| 5 | 121-9671 | 16 | Screw-HSBH |
| 6 | 140-2575 | 2 | Brake Caliper ASM |
| 7 | 140-2585 | 1 | Brake Caliper ASM, LH |
| 7:1 | 140-2595 | 1 | Brake Pad Service Kit (Rear, Qty 4) |
| 7:2 | 119-9509 | 1 | Screw-Bleed |
| 7:3 | 136-6328 | 2 | Spring-Rattle, Anti ● |
| 8 | 140-2590 | 1 | Brake Caliper ASM, RH |
| 8:1 | 140-2595 | 1 | Brake Pad Service Kit (Rear, Qty 4) |
| 8:2 | 119-9509 | 1 | Screw-Bleed |
| 8:3 | 136-6328 | 2 | Spring-Rattle, Anti ● |
| 9 | 131-8573 | 4 | Screw-HSH |
| 10 | 119-9509 | 2 | Screw-Bleed |
| 11 | 115-2341 | 8 | Washer-Banjo |
| 12 | 120-4875 | 4 | Bolt-Flange, Banjo |
| 14 | 127-7781 | 1 | Brake Line-Front |
| 15 | 127-7782 | 1 | Brake Line-Rear |
| 16 | 3234-11 | 2 | Screw-HHF |
| 17 | 3290-357 | 2 | Nut-HHF, Whiz |
| 19 | 131-8398 | 2 | Cable-Brake, Park |
| 20 | 32180-030 | 4 | Clip-Tie |
| 21 | 49-2040 | 2 | Screw-HWHTF |
| 22 | 3290-378 | 1 | Tie-Cable |
| 24 | 3234-25 | 4 | Screw-HHF |

● Not illustrated

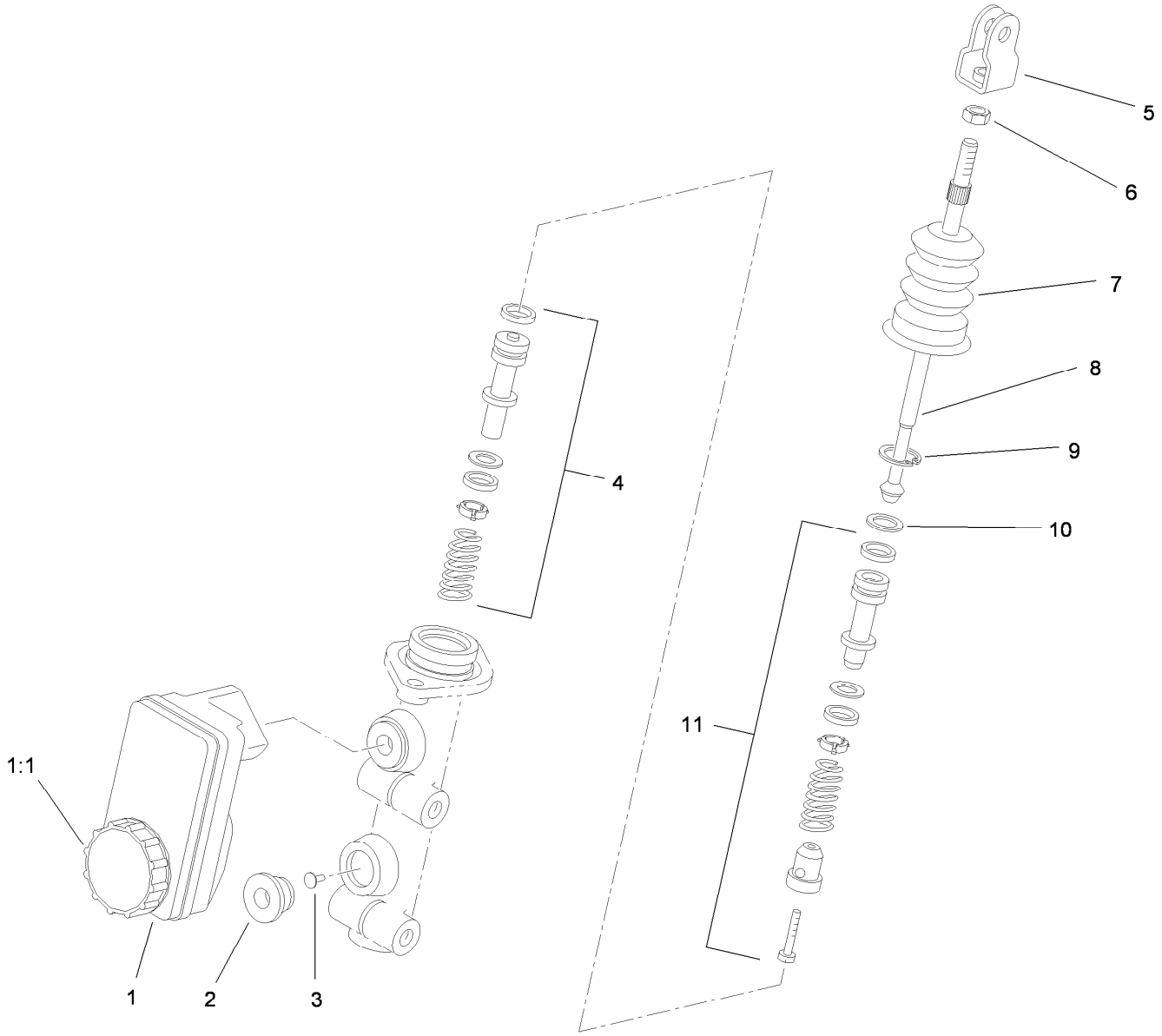


# Master Cylinder Assembly No. 104-6782

| *Ref.* | *Part Number* | *Qty.* | *Description* |
|---|---|---|---|
| 1 | 104-6845 | 1 | Reservoir ASM |
| 1:1 | 92-4112 | 1 | Cap ASM |
| 2 | 93-8971 | 2 | Seal-Port, Flange |
| 3 | 92-4103 | 1 | Pin-Stop |
| 4 | 92-4102 | 1 | Secondary Piston ASM |
| 5 | 92-4110 | 1 | Clevis |
| 6 | 21-0360 | 1 | Nut-Hex |
| 7 | 94-5209 | 1 | Cover-Dust |
| 8 | 94-5210 | 1 | Rod-Push |
| 9 | 92-4109 | 1 | Ring-Snap |
| 10 | 92-4108 | 1 | Retainer-Washer |
| 11 | 92-4101 | 1 | Primary Piston ASM |

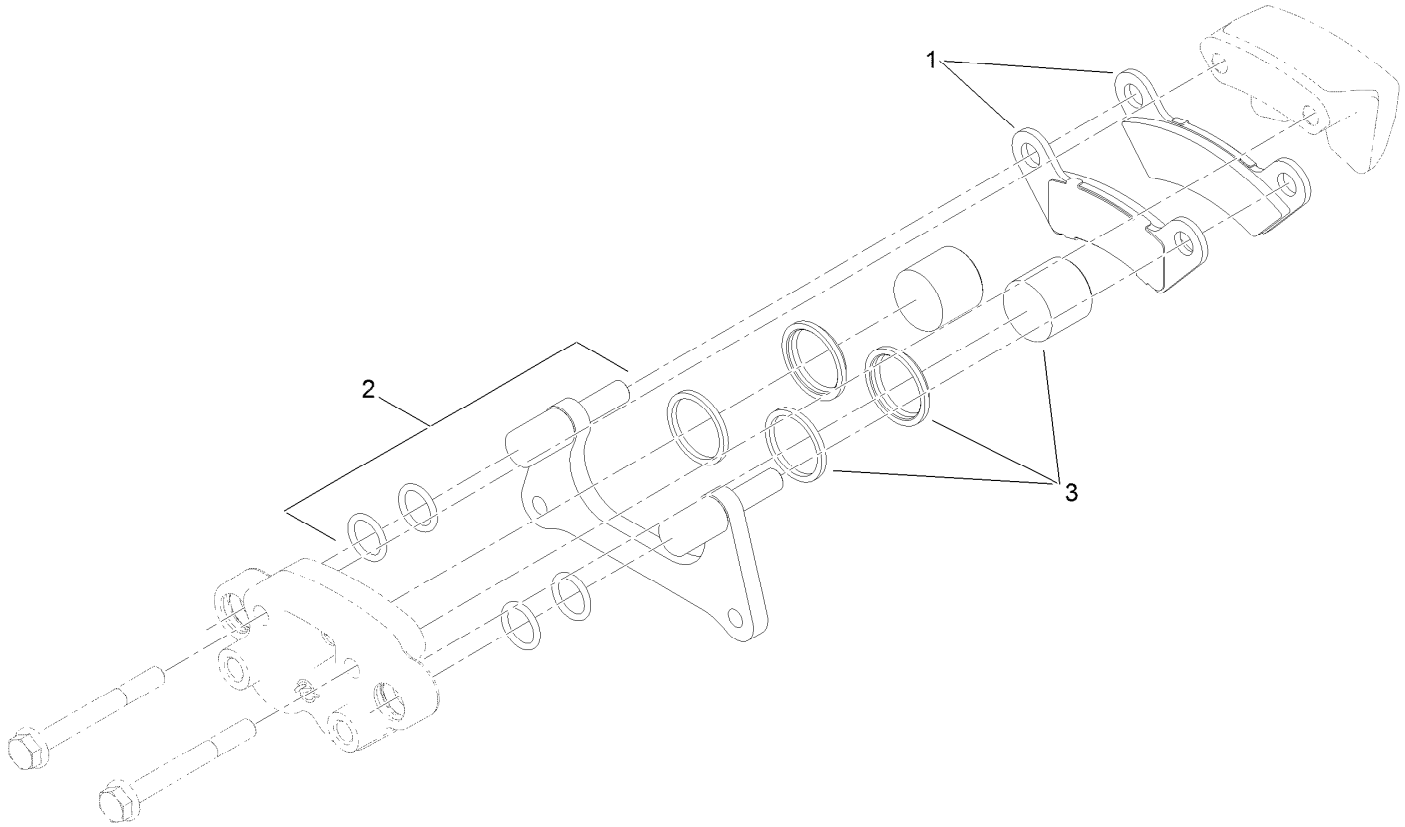


# Brake Caliper Assembly No. 140-2575

| *Ref.* | *Part Number* | *Qty.* | *Description* |
|---|---|---|---|
| 1 | 140-2580 | 1 | Brake Pad Service Kit (Front, Qty 4) |
| 2 | 119-9511 | 1 | Bracket Kit |
| 3 | 133-0614 | 1 | Piston Kit |

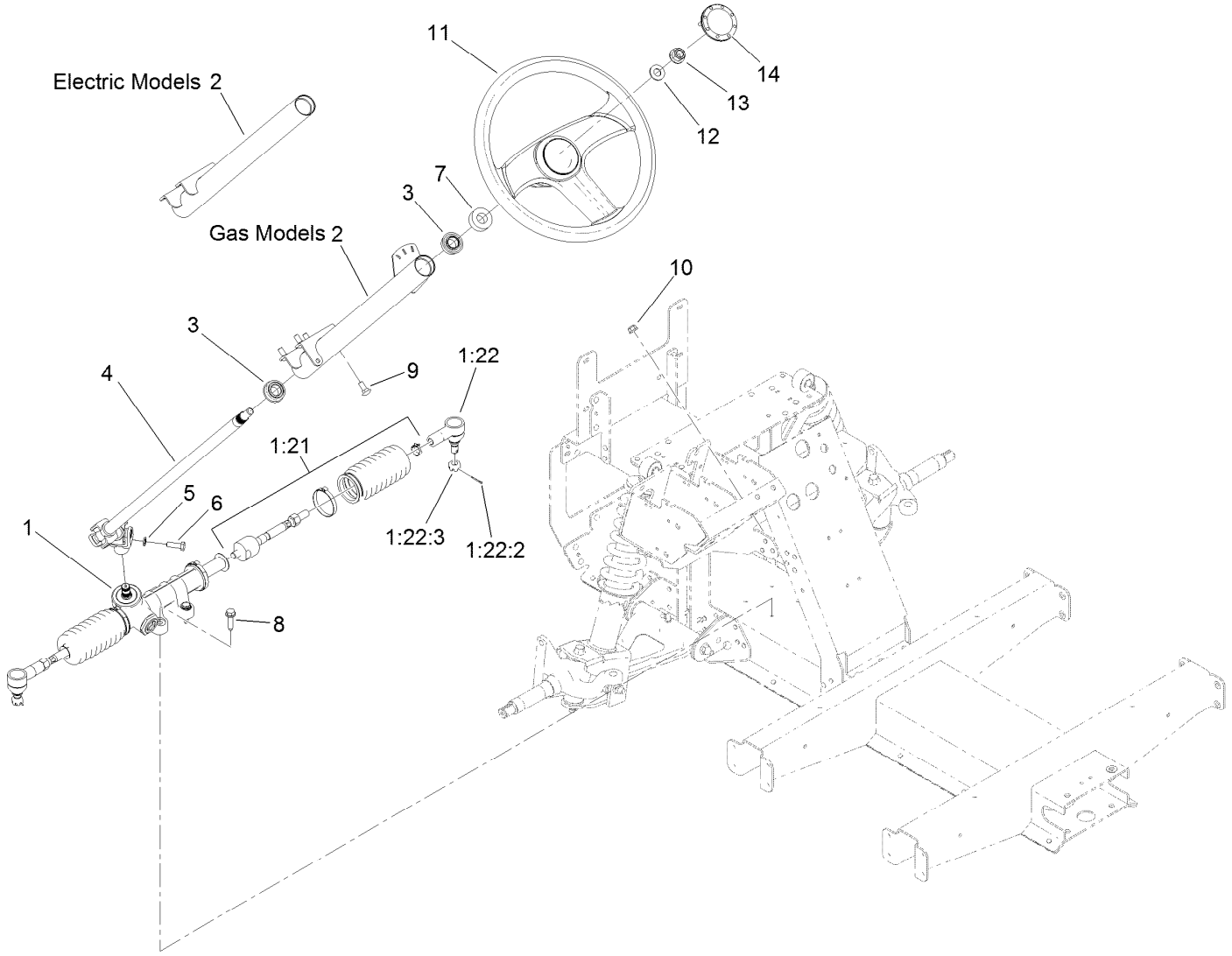


# Steering Assembly

| Ref. | Part Number | Qty. | Description |
|---|---|---|---|
| 1 | 138-0114 | 1 | Steering Rack ASM |
| 1:21 | 140-4591 | 1 | Kit-Tie Rod ASM, Gtx |
| 1:22 | 140-4592 | 1 | Kit-Rod End ASM |
| 1:22:2 | 3272-42 | 1 | Pin-Cotter |
| 1:22:3 | 140-2493 | 1 | Nut-Hex, Slotted |
| 2 | 139-3343 | 1 | Steering Column ASM |
| 3 | 112-3262 | 2 | Bearing |
| 4 | 127-8804 | 1 | Shaft-Steering |
| 5 | 3253-4 | 1 | Washer-Lock |

| Ref. | Part Number | Qty. | Description |
|---|---|---|---|
| 6 | 116-3515 | 1 | Screw-HH, Special |
| 7 | 21-9260 | 1 | Cover-Dust |
| 8 | 32144-49 | 4 | Screw-HWHTF |
| 9 | 3230-1 | 4 | Bolt-CARR |
| 10 | 104-8300 | 4 | Nut-HF, NI |
| 11 | 131-0957 | 1 | Wheel-Steering |
| 12 | 3256-26 | 1 | Washer-Flat |
| 13 | 99-5107 | 1 | Nut-Lock |
| 14 | 131-3630 | 1 | Cap-Wheel, Steering |

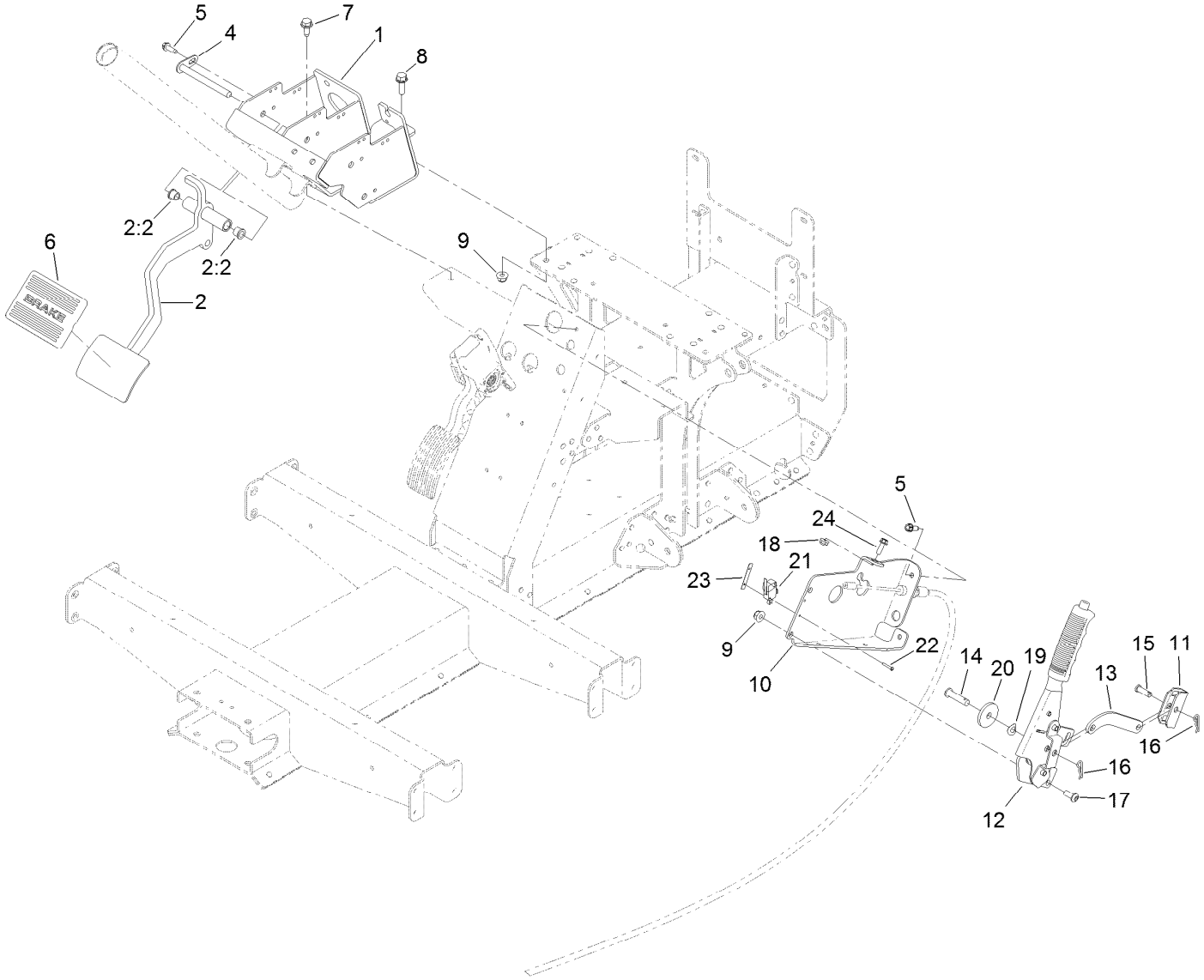


# Pedal and Control Assembly

| Ref. | Part Number | Qty. | Description |
|---|---|---|---|
| 1 | 127-8817-03 | 1 | Mount-Pedal |
| 2 | 138-9385 | 1 | Brake Pedal ASM |
| 2:2 | 256-116 | 2 | Bushing-Flange |
| 4 | 131-8459 | 1 | Shaft-Pivot |
| 5 | 49-2040 | 3 | Screw-HWHTF |
| 6 | 7-3900 | 1 | Pad-Brake |
| 7 | 32144-70 | 2 | Screw-HWHTF |
| 8 | 3234-29 | 1 | Screw-HHF |
| 9 | 104-8300 | 3 | Nut-HF, NI |
| 10 | 140-4836-03 | 1 | Mount-Park Brake |
| 11 | 87-3480 | 1 | Bracket-Equalizer, Cable |
| 12 | 131-8320 | 1 | Lever-Brake, Park |

| Ref. | Part Number | Qty. | Description |
|---|---|---|---|
| 13 | 144-0516 | 1 | Link-Park, Brake |
| 14 | 283-10 | 1 | Pin-Clevis |
| 15 | 1-808280 | 1 | Pin-Clevis |
| 16 | 1-806003 | 2 | Pin-Cotter |
| 17 | 3274-55 | 2 | Screw-HSBH |
| 18 | 104-7201 | 1 | Nut-HF, NI |
| 19 | 121-4605 | 1 | Washer-Spring |
| 20 | 131-8496 | 1 | Washer-Plain |
| 21 | 108-6496 | 1 | Switch (W/Boot) |
| 22 | 3290-313 | 2 | Screw-SPH |
| 23 | 3290-354 | 1 | Nut-Speed |
| 24 | 115-5103 | 1 | Screw-HHF |

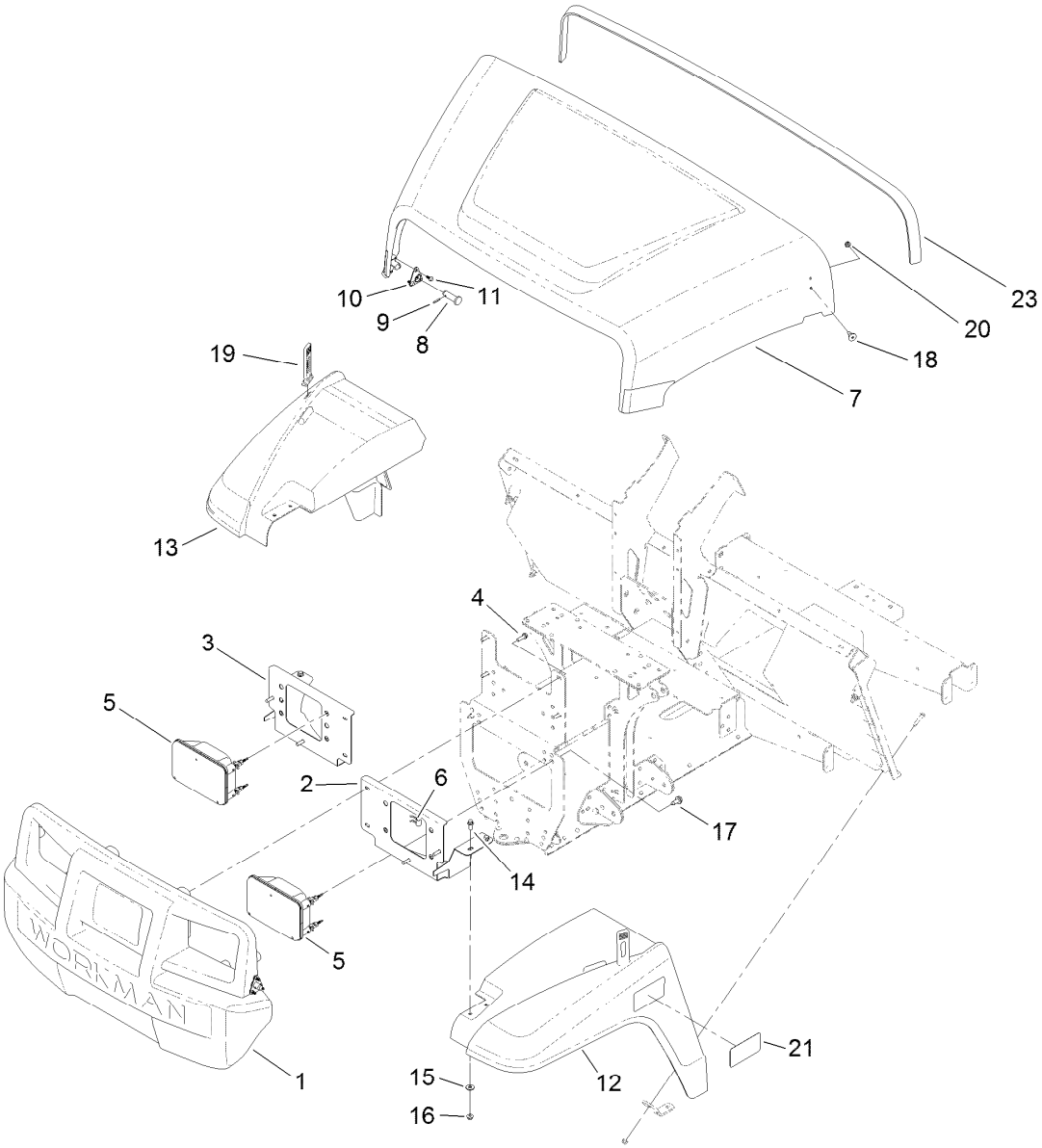


# Hood and Fender Assembly

| Ref. | Part Number | Qty. | Description |
|---|---|---|---|
| 1 | 132-8530 | 1 | Bumper |
| 2 | 131-8455-03 | 1 | Bracket-Headlight, LH |
| 3 | 131-8456-03 | 1 | Bracket-Headlight, RH |
| 4 | 46-8091 | 8 | Screw-HWH |
| 5 | 138-9260 | 2 | Headlight ASM |
| 6 | 115-2408 | 6 | Clip-Speed |
| 7 | 136-6281 | 1 | Hood |
| 8 | 117-5094 | 2 | Pin-Clevis |
| 9 | 32121-50 | 2 | Pin-Spring |
| 10 | 112-3308 | 2 | Retainer-Pin |
| 11 | 121-9605 | 6 | Screw-HWH |

| Ref. | Part Number | Qty. | Description |
|---|---|---|---|
| 12 | 127-7771 | 1 | Fender-Front, LH |
| 13 | 127-7772 | 1 | Fender-Front, RH |
| 14 | 3234-33 | 4 | Screw-HHF |
| 15 | 3256-2 | 4 | Washer-Flat |
| 16 | 104-7201 | 4 | Nut-HF, NI |
| 17 | 32144-70 | 2 | Screw-HWHTF |
| 18 | 125-1122 | 2 | Screw |
| 19 | 131-8402 | 2 | Strap-Down, Hold |
| 20 | 3296-56 | 2 | Nut-Lock, NI |
| 21 | 131-8516 | 2 | Decal-Fender |
| 23 | 133-7210 | 1 | Seal-Trim, Hood |

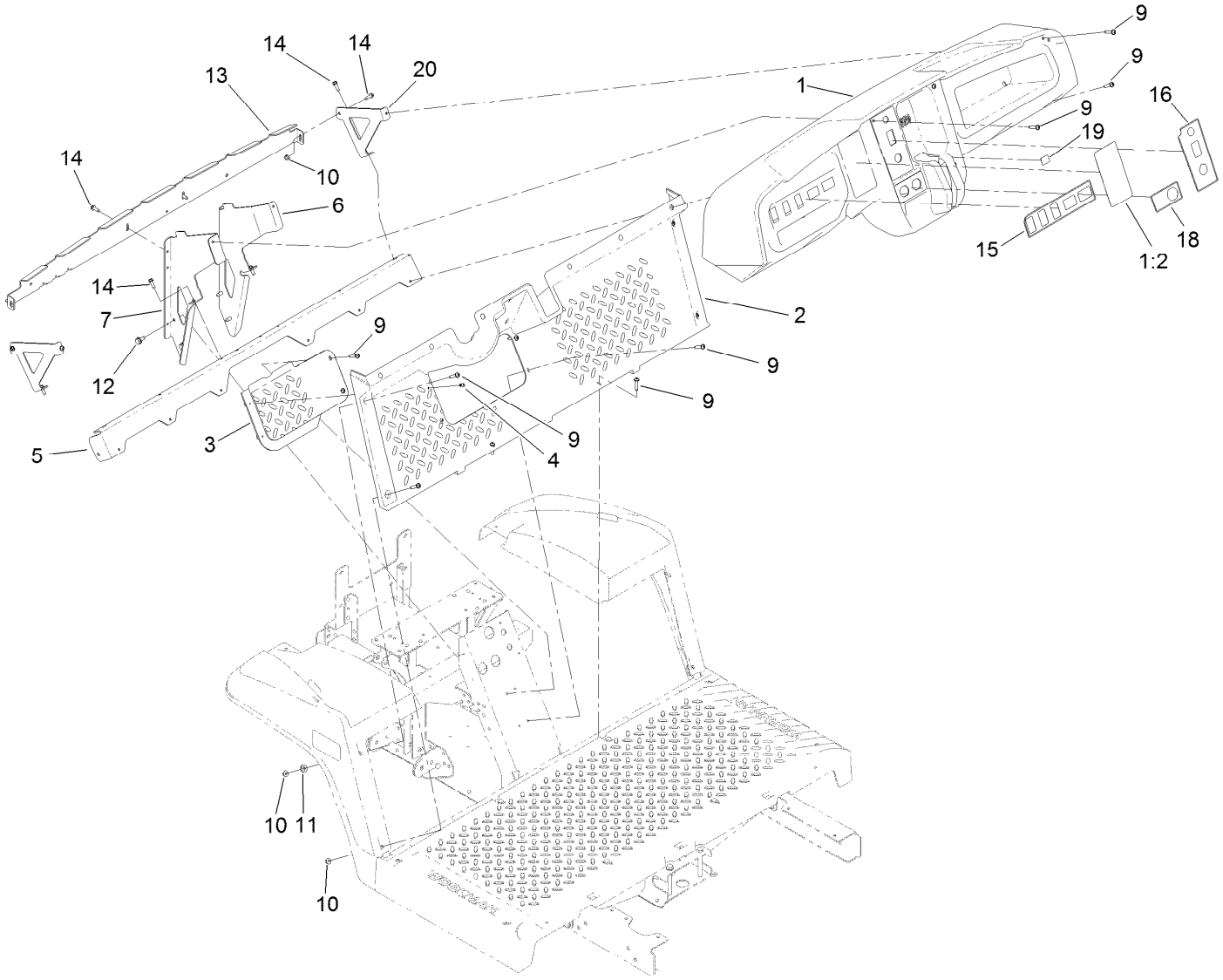


# Dash Assembly

| Ref. | Part Number | Qty. | Description |
|---|---|---|---|
| 1 | 131-8593 | 1 | Dash |
| 1:2 | 131-8414 | 1 | Decal-Danger |
| 2 | 127-7846 | 1 | Footboard |
| 3 | 127-7847 | 1 | Cover-Footboard |
| 4 | 107-7461 | 2 | Screw-Plastite |
| 5 | 127-7831-03 | 1 | Angle |
| 6 | 131-8336-03 | 1 | Bracket-Dash, RH |
| 7 | 131-8335-03 | 1 | Bracket-Dash, LH |
| 9 | 132-6777 | 20 | Screw-TTH |
| 10 | 104-7201 | 6 | Nut-HF, NI |

| Ref. | Part Number | Qty. | Description |
|---|---|---|---|
| 11 | 3256-2 | 2 | Washer-Flat |
| 12 | 32144-70 | 4 | Screw-HWHTF |
| 13 | 131-8568-03 | 1 | Reinforcement-Dash |
| 14 | 49-2040 | 8 | Screw-HWHTF |
| 15 | 138-3525 | 1 | Decal-Dashboard |
| 16 | 131-8412 | 1 | Decal-Control Panel, Electric |
| 18 | 131-8493 | 1 | Decal-USB |
| 19 | 131-8506 | 1 | Decal-Status, Machine |
| 20 | 131-8569-03 | 2 | Bracket-Dash, Side |

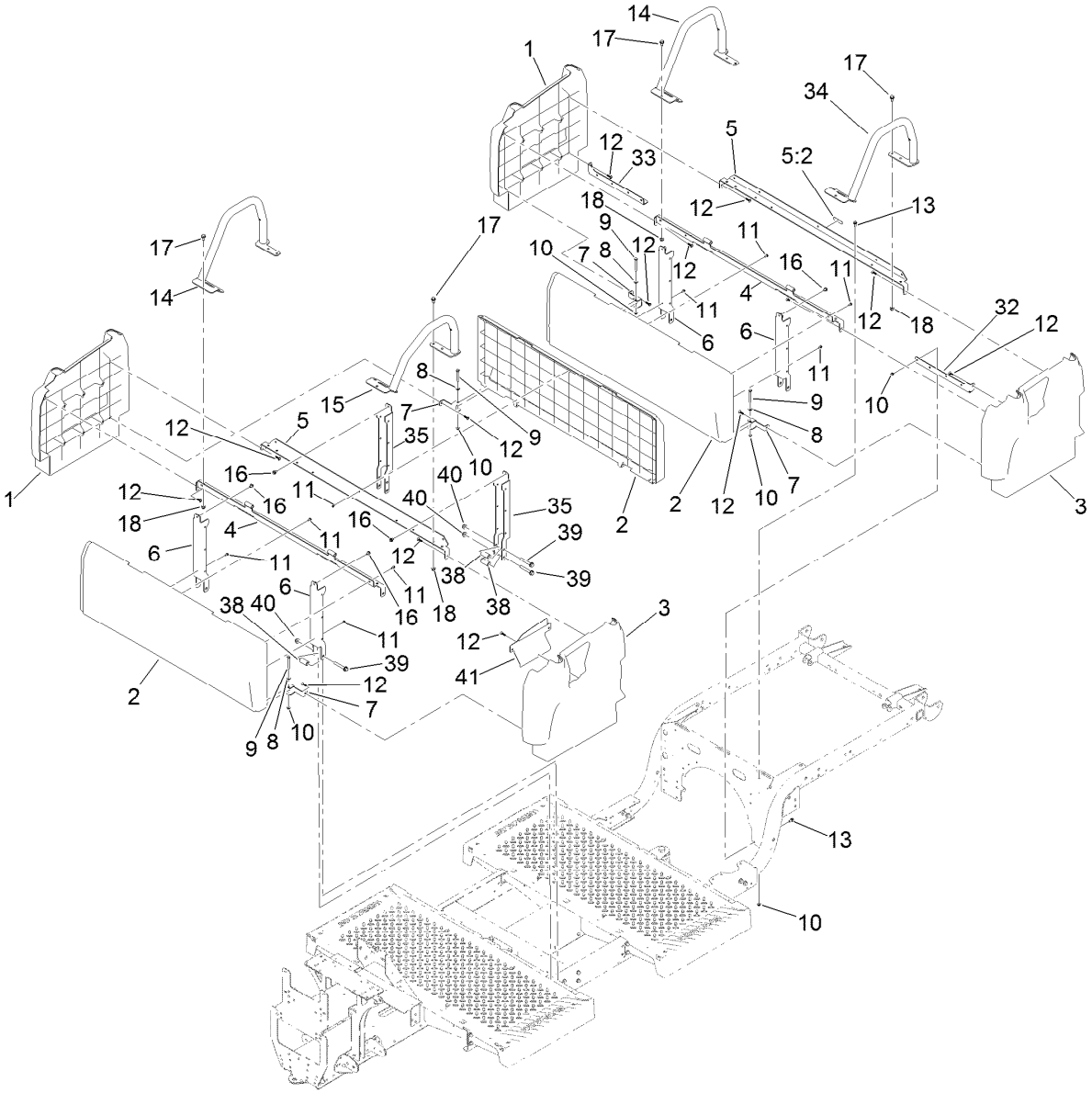


# Seatbase Assembly

| Ref. | Part Number | Qty. | Description |
|---|---|---|---|
| 1 | 127-7805 | 2 | Side-Base, Seat (RH) |
| 2 | 133-7188 | 3 | Panel-Base, Seat |
| 3 | 127-7807 | 2 | Side-Base, Seat (LH) |
| 4 | 133-7345-03 | 2 | Support-Seat |
| 5 | 137-6991 | 1 | Seat Support ASM |
| 5:2 | 120-9570 | 1 | Decal-Warning |
| 6 | 127-7841-03 | 4 | Channel-Support, Seat |
| 7 | 127-7844-03 | 6 | Clamp-Plate, Floor |
| 8 | 3256-22 | 6 | Washer-Flat |
| 9 | 321-18 | 6 | Screw-HH |
| 10 | 104-7201 | 12 | Nut-HF, NI |
| 11 | 112-6349 | 13 | Screw-HWH |
| 12 | 120-2349 | 19 | Screw |
| 13 | 3234-33 | 6 | Screw-HHF |

| Ref. | Part Number | Qty. | Description |
|---|---|---|---|
| 14 | 131-8352-05 | 2 | Restraint-Hip, RH |
| 15 | 131-8353-05 | 1 | Restraint-Hip, LH |
| 16 | 46-6810 | 6 | Screw And Washer ASM |
| 17 | 32144-70 | 12 | Screw-HWHTF |
| 18 | 104-8300 | 12 | Nut-HF, NI |
| 32 | 127-7842-03 | 1 | Bracket-Support, Side (LH) |
| 33 | 127-7843-03 | 1 | Bracket-Support, Side (RH) |
| 34 | 131-8354-05 | 1 | Restraint-Hip, LH |
| 35 | 131-8355-03 | 2 | Channel-Support, Seat |
| 38 | 131-8452 | 6 | Spacer |
| 39 | 3234-39 | 6 | Screw-HHF |
| 40 | 104-8301 | 6 | Nut-HF, NI |
| 41 | 131-8525-05 | 1 | Cover-Opening |

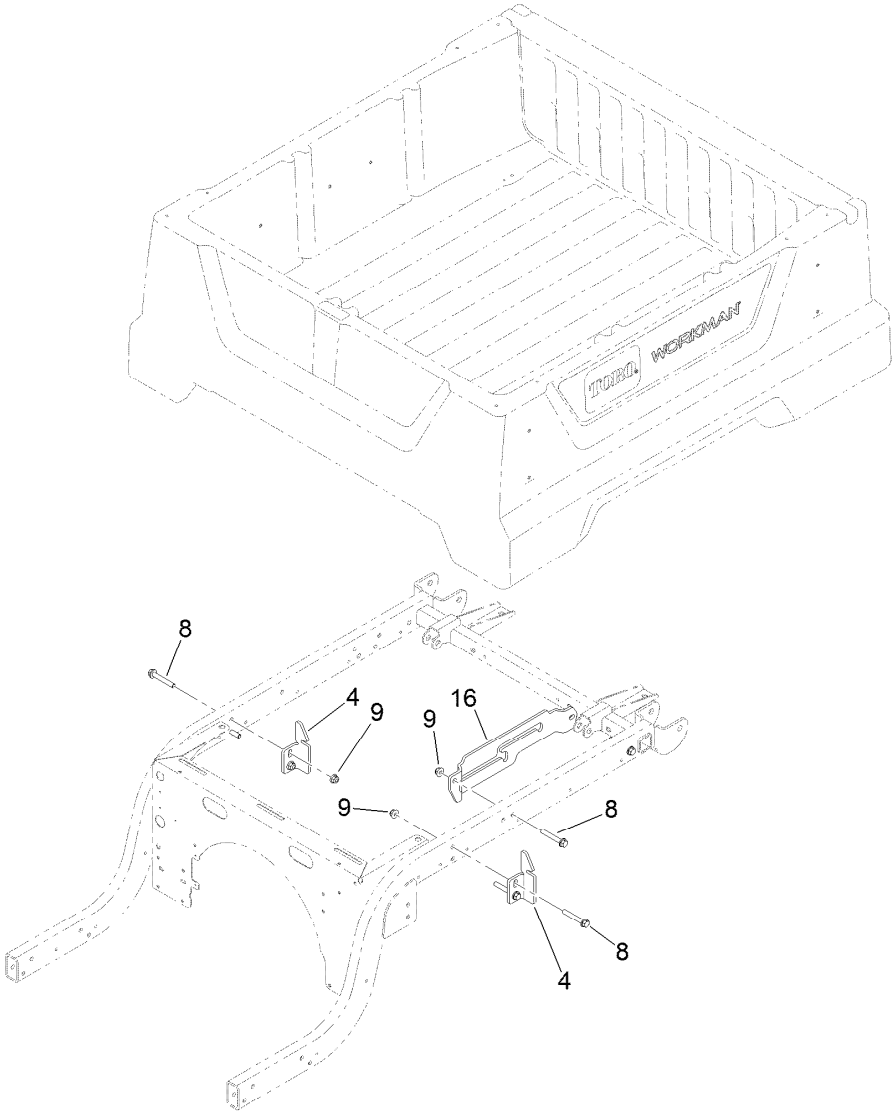


# Cargo Bed Assembly

| Ref. | Part Number | Qty. | Description |
|---|---|---|---|
| 4 | 127-7428-03 | 2 | Striker-Latch, Bed |
| 8 | 3234-39 | 6 | Screw-HHF |
| 9 | 104-8301 | 6 | Nut-HF, NI |
| 16 | 132-8518 | 1 | Bracket-Rod, Prop |

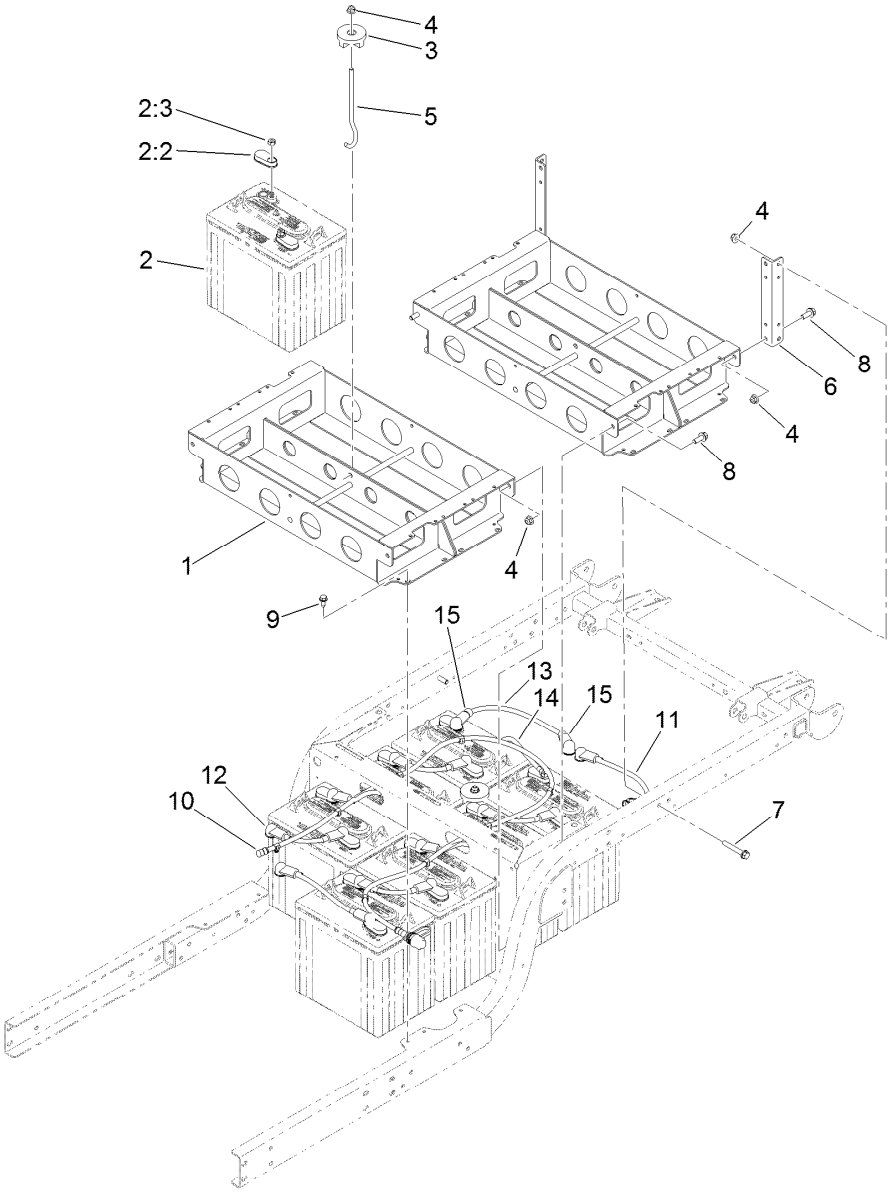


# Battery Assembly

| Ref. | Part Number | Qty. | Description |
|---|---|---|---|
| 1 | 131-8300-03 | 2 | Tray-Battery |
| 2 | | 8 | Battery-Lead Acid, Wet ■ |
| 2:2 | 107-0289 | 2 | Cover-Terminal, Battery |
| 2:3 | 107-0388 | 2 | Nut |
| 3 | 104-7149 | 2 | Hold Down ASM |
| 4 | 104-8301 | 8 | Nut-HF, NI |
| 5 | 131-8387 | 2 | Rod-Battery Hold Down |
| 6 | 131-8302-03 | 2 | Bracket-Box, Battery |
| 7 | 3234-39 | 2 | Screw-HHF |
| 8 | 3234-42 | 4 | Screw-HHF |

| Ref. | Part Number | Qty. | Description |
|---|---|---|---|
| 9 | 32144-70 | 4 | Screw-HWHTF |
| 10 | 131-8491 | 1 | Watering Hose ASM |
| 11 | 107-0739 | 2 | Cable-Battery, Positive |
| 12 | 107-0738 | 6 | Cable-Battery, Rd ASM |
| 13 | 122-0750 | 1 | Cable-Battery, Positive |
| 14 | 94-6168 | 1 | Wire-Ground, Battery |
| 15 | 32180-009 | 2 | Insulator-Lug, Red |
| 99 | 107-0392 | 1 | Protection-Terminal, Aerosol ● |

● Not illustrated

■ Not serviced separately

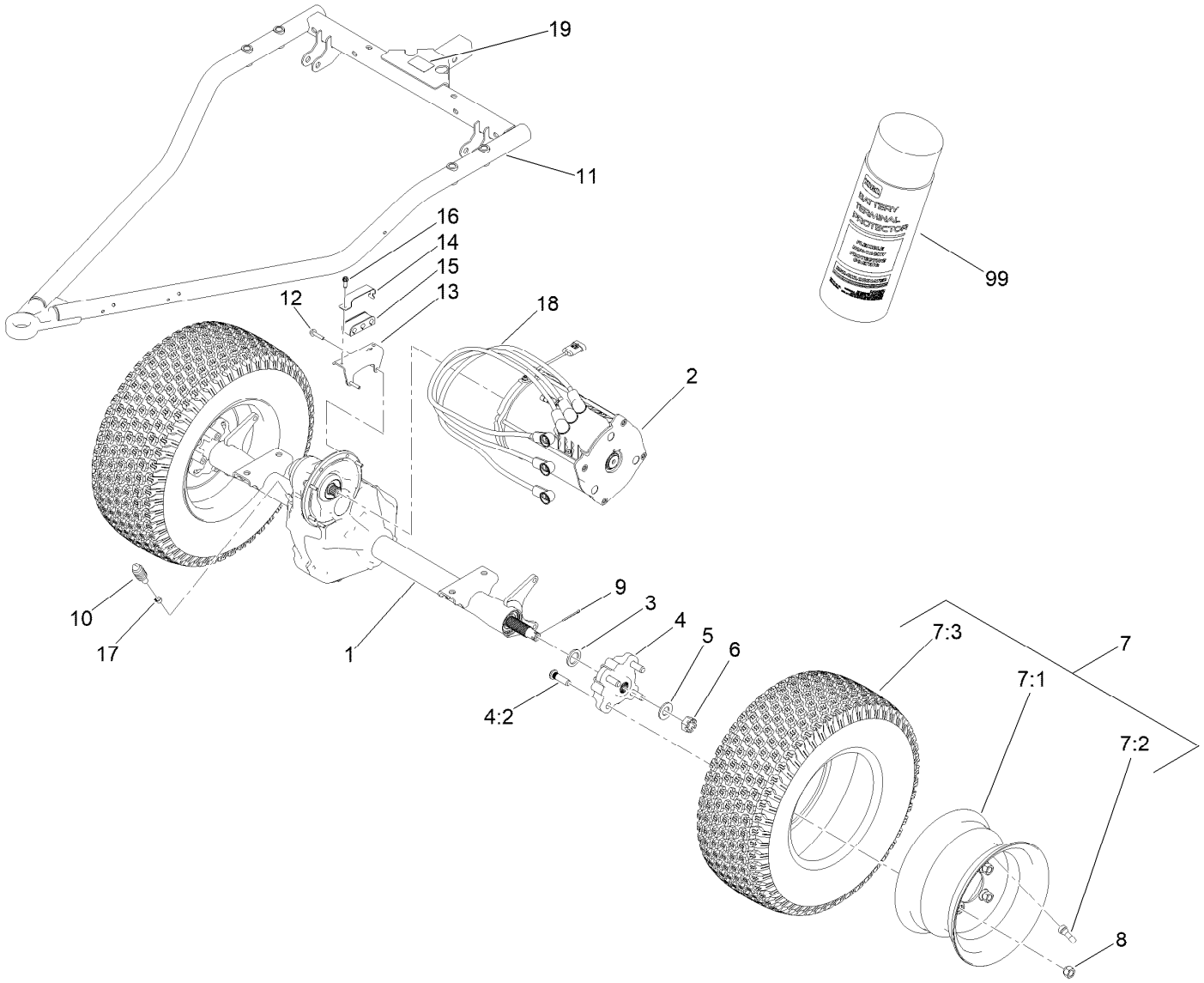


# Rear Axle and Motor Assembly

| Ref. | Part Number | Qty. | Description |
|---|---|---|---|
| 1 | 136-6340 | 1 | Transaxle ASM |
| 2 | 137-6936 | 1 | Motor-AC |
| 3 | 131-8570 | 2 | Spacer-Hardened |
| 4 | 140-4849 | 2 | Hub ASM, Rear |
| 4:2 | 10-6830 | 4 | Stud-Type, Drive |
| 5 | 92-5836 | 2 | Washer |
| 6 | 32136-5 | 2 | Nut-Hex, Slotted |
| 7 | 139-4495 | 2 | Wheel And Tire ASM |
| 7:1 | 131-8317 | 1 | Wheel |
| 7:2 | 232-27 | 1 | Stem-Valve |
| 7:3 | 139-4475 | 1 | Tire-20 X 8.00-10 |
| 8 | 242-50 | 8 | Nut-Lug |
| 9 | 1-806800 | 2 | Pin-Cotter |

| Ref. | Part Number | Qty. | Description |
|---|---|---|---|
| 10 | 127-8859 | 1 | Bellows-Breather |
| 11 | 140-2568-03 | 1 | Gtx-E Swing Arm ASM [black] |
| 12 | 33103-030 | 6 | Screw-HHF |
| 13 | 131-8416 | 1 | Bracket-Cable |
| 14 | 131-8482 | 1 | Retainer-Isolator |
| 15 | 131-8420 | 1 | Isolator-Clamp |
| 16 | 49-2040 | 1 | Screw-HWHTF |
| 17 | 2412-146 | 1 | Clamp-Hose |
| 18 | 122-0743 | 3 | Cable-Battery, Rd ASM |
| 19 | 137-9984 | 1 | Decal-Load, Towing |
| 99 | 107-0392 | 1 | Protection-Terminal, Aerosol |

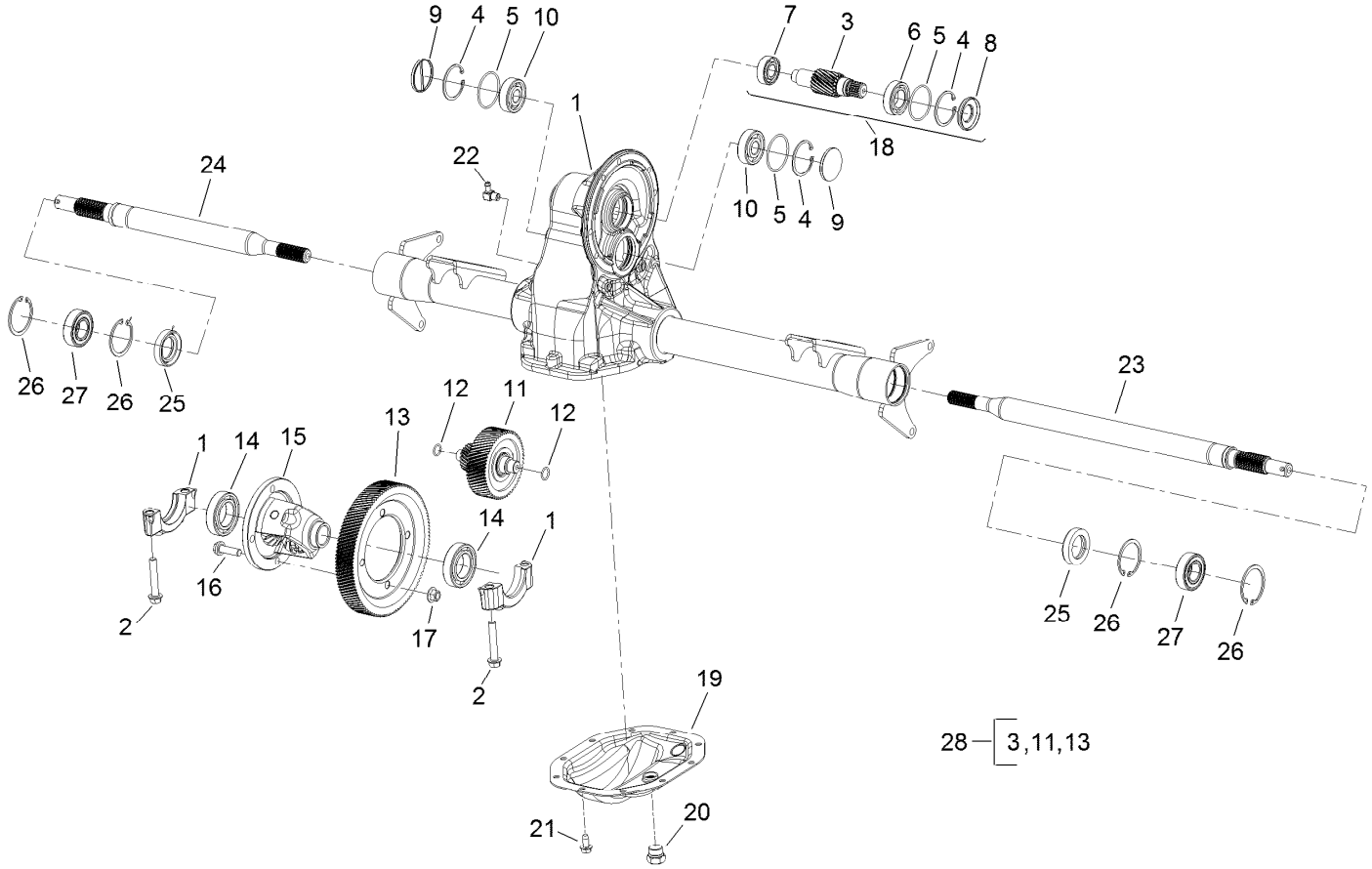


# Transaxle Assembly No. 136-6340

| Ref. | Part Number | Qty. | Description |
|---|---|---|---|
| 1 | 133-2447 | 1 | Housing-Axle |
| 2 | 133-2448 | 4 | Bolt-Cap, Bearing |
| 3 | 133-2485 | 1 | Gear-Input |
| 4 | 133-2450 | 3 | Ring-Retaining |
| 5 | 133-2451 | 3 | O-Ring |
| 6 | 133-2452 | 1 | Bearing-Ball |
| 7 | 133-2453 | 1 | Bearing-Ball |
| 8 | 133-2454 | 1 | Seal-Oil |
| 9 | 133-2455 | 2 | Plug-Cap, End |
| 10 | 133-2456 | 2 | Bearing-Ball |
| 11 | 133-2486 | 1 | Intermediate Gear ASM |
| 12 | 133-2458 | 2 | O-Ring |
| 13 | 133-2459 | 1 | Gear-Drive, Final |
| 14 | 133-2460 | 2 | Bearing-Ball |

| Ref. | Part Number | Qty. | Description |
|---|---|---|---|
| 15 | 133-2461 | 1 | Differential ASM |
| 16 | 133-2462 | 4 | Bolt-HHF |
| 17 | 133-2463 | 4 | Nut-Lock |
| 18 | 133-2487 | 1 | Input Gear Kit |
| 19 | 136-6341 | 1 | Plate-Cover |
| 20 | 133-2466 | 1 | Plug-HH |
| 21 | 133-2467 | 10 | Screw-Tapping |
| 22 | 133-2468 | 1 | Elbow-Hose |
| 23 | 133-2469 | 1 | Shaft-Axle, LH |
| 24 | 133-2470 | 1 | Shaft-Axle, RH |
| 25 | 112-3140 | 2 | Seal-Oil |
| 26 | 133-2472 | 4 | Ring-Retaining |
| 27 | 108-2425 | 2 | Bearing-Ball |
| 28 | 108-2409 | 1 | Internal Gear Kit |

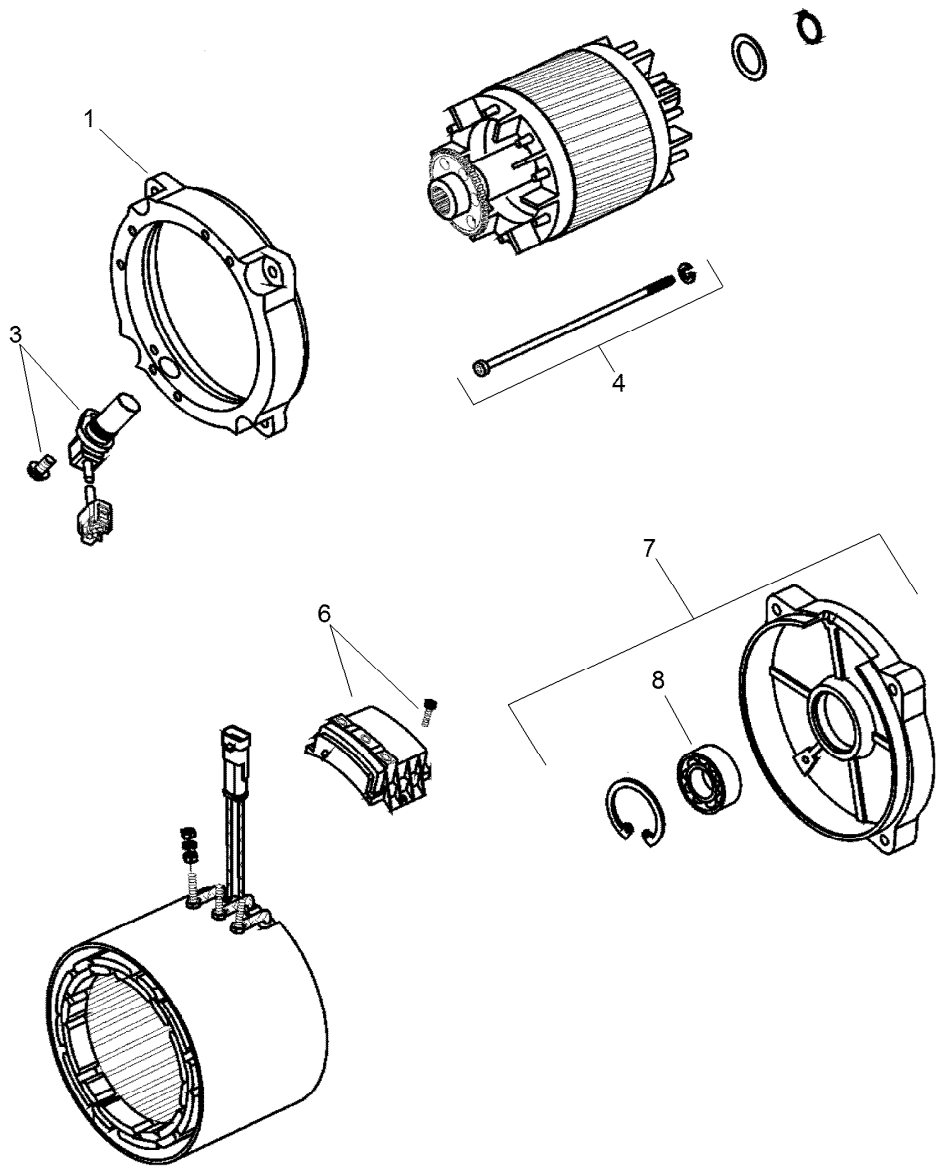


# Electric Motor Assembly No. 137-6936

| *Ref.* | *Part Number* | *Qty.* | *Description* |
|---|---|---|---|
| 1 | 132-4924 | 1 | Bracket-End, Drive |
| 3 | 132-4925 | 1 | Sensor |
| 4 | 132-4926 | 1 | Screw |
| 6 | 132-4927 | 1 | Plate-Connection |
| 7 | 132-4928 | 1 | Bracket-End, Rear |
| 8 | 132-4929 | 1 | Bearing |

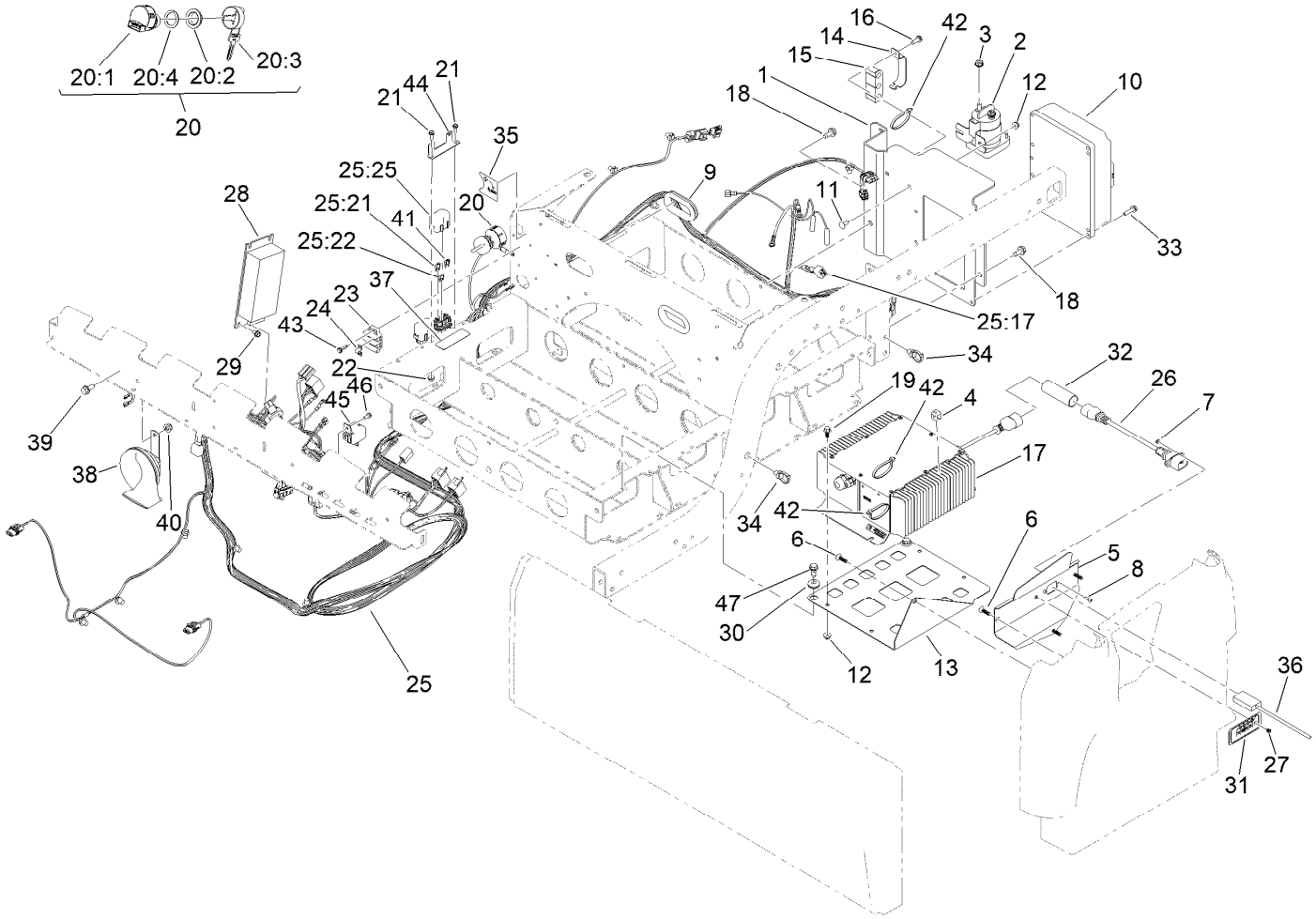


# Controller Assembly

| Ref. | Part Number | Qty. | Description |
|---|---|---|---|
| 1 | 131-8415-03 | 1 | Bracket-Controller |
| 2 | 104-7136 | 1 | Contactor-Trombetta |
| 3 | 107-0380 | 2 | Nut-HHF |
| 4 | 32180-082 | 1 | Clip-Edge W/Tie, Perpendicular |
| 5 | 140-2578-05 | 1 | Bracket-Mounting, Charger Cord |
| 6 | 120-2349 | 4 | Screw |
| 7 | 3296-54 | 2 | Nut-Lock |
| 8 | 3250-26 | 2 | Screw-PPH |
| 9 | 240-12 | 2 | Grommet-Rubber |
| 10 | 137-9898 | 1 | Controller-Sevcon |
| 11 | 3229-11 | 2 | Screw-CARR |
| 12 | 104-7201 | 6 | Nut-HF, NI |
| 13 | 140-2598-03 | 1 | Bracket-Mounting, Charger |
| 14 | 131-8482 | 1 | Retainer-Isolator |
| 15 | 131-8420 | 1 | Isolator-Clamp |
| 16 | 49-2040 | 1 | Screw-HWHTF |
| 17 | 131-8490 | 1 | Charger-48V Onboard |
| 18 | 32144-70 | 3 | Screw-HWHTF |
| 19 | 99-6810 | 4 | Screw-HHF |
| 20 | 110-2580 | 1 | Switch-Key, Supervisor |
| 20:1 | | 1 | Switch-Key ■ |
| 20:2 | 108-8660 | 1 | Nut-Mounting |
| 20:3 | 110-5221 | 1 | Set-Key, Supervisor |
| 20:4 | 108-8659 | 1 | Washer-Backup |
| 21 | 32105-23 | 2 | Screw |
| 22 | 3290-148 | 2 | Nut-HF |
| 23 | 42862 | 1 | Block-Terminal, Ground |
| 24 | 42863 | 1 | Strip-Jumper |
| 25 | 122-1475 | 1 | Harness-Wire, Main |
| 25:17 | 100-4918 | 2 | Diode |
| 25:18 | 32160-092 | 1 | Connector-Mp280, 2F ● |
| 25:21 | 121-8880 | 1 | Fuse-Mini Blade, 10 Amp |
| 25:22 | 121-8882 | 1 | Fuse-Mini Blade, 20 Amp |
| 25:23 | 121-8864 | 1 | Fuse-Mini Blade, 5 Amp ● |

● Not illustrated

■ Not serviced separately

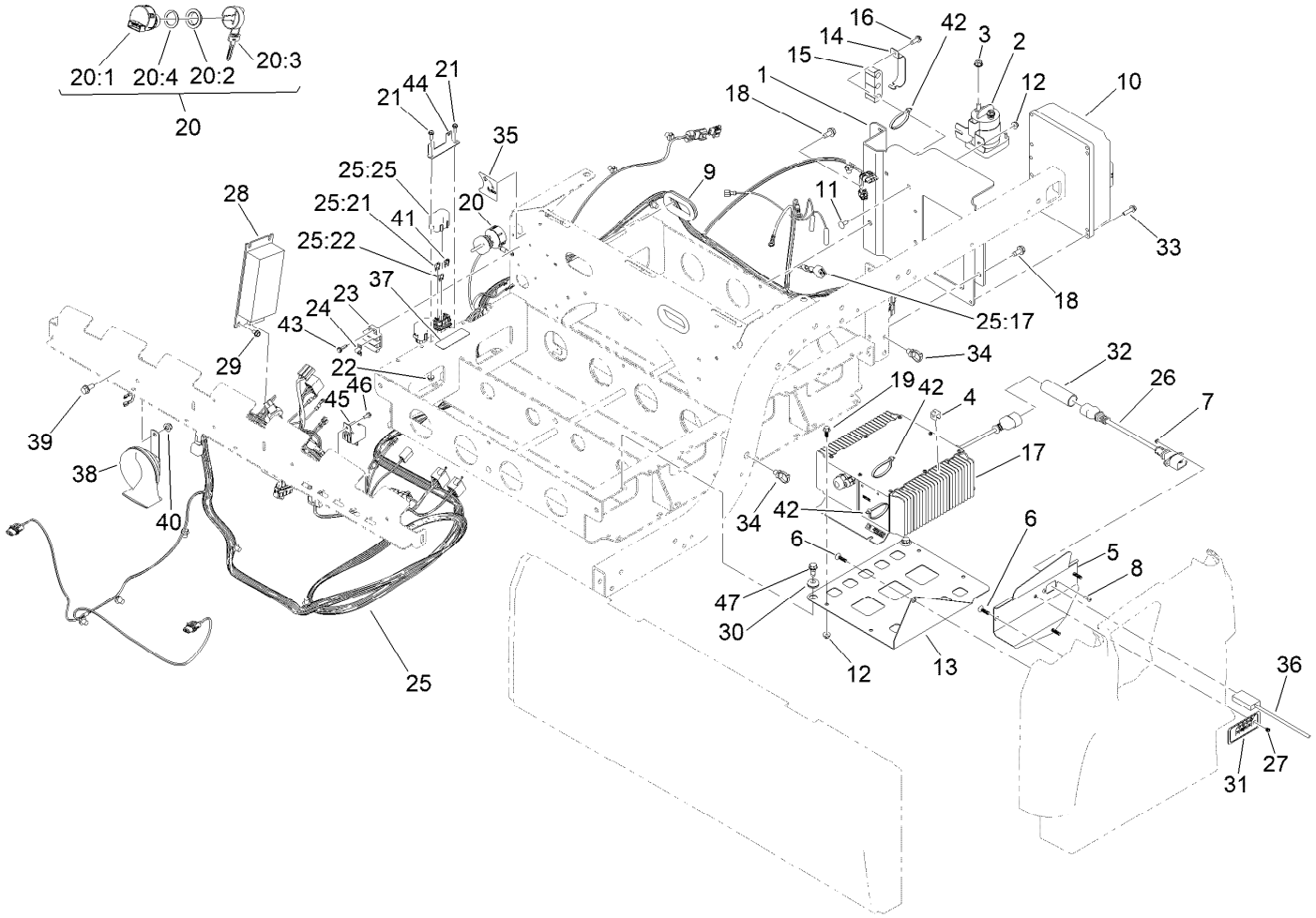


# Controller Assembly (continued)

| Ref. | Part Number | Qty. | Description |
|---|---|---|---|
| 25:24 | 121-8866 | 1 | Fuse-Mini Blade, 10 Amp ● |
| 25:25 | 32180-195 | 2 | Cover-Cooper-Bussmann, Cfh (Short) |
| 26 | 131-8497 | 1 | Cordset |
| 27 | 131-8499 | 1 | Holder-LED |
| 28 | 137-7952 | 1 | Converter-DC-DC |
| 29 | 99-8445 | 2 | Screw-HWH |
| 30 | 109-0023 | 2 | Grommet |
| 31 | 131-8495 | 1 | Decal-Function, Charger |
| 32 | 107-0341 | 1 | Tube-Shrink, Heat |
| 33 | 32144-86 | 4 | Screw-HWHTF |
| 34 | 32180-030 | 3 | Clip-Tie |
| 35 | 131-8527 | 1 | Decal-Mode |
| 36 | 107-0382 | 1 | Powercord-AC, Europe |

| Ref. | Part Number | Qty. | Description |
|---|---|---|---|
| 36 | 107-0383 | 1 | Powercord-AC, U.K. |
| 36 | 107-0384 | 1 | Powercord-AC |
| 37 | 139-3338 | 1 | Decal-Fuse Block, 48V |
| 38 | 107-0358 | 1 | Horn |
| 39 | 3234-5 | 1 | Screw-HHF |
| 40 | 104-8300 | 1 | Nut-HF, NI |
| 41 | 121-8884 | 1 | Fuse-Mini Blade, 30 Amp |
| 42 | 3290-378 | 3 | Tie-Cable |
| 43 | 100-4351 | 2 | Screw-HWH |
| 44 | 138-9299 | 1 | Bracket-Fuse Block |
| 45 | 122-2401 | 1 | Relay, 48V Coil, 50A At 48V |
| 46 | 32144-1 | 1 | Screw-Taptite |
| 47 | 126-4424 | 2 | Screw-Shoulder |

● Not illustrated

■ Not serviced separately

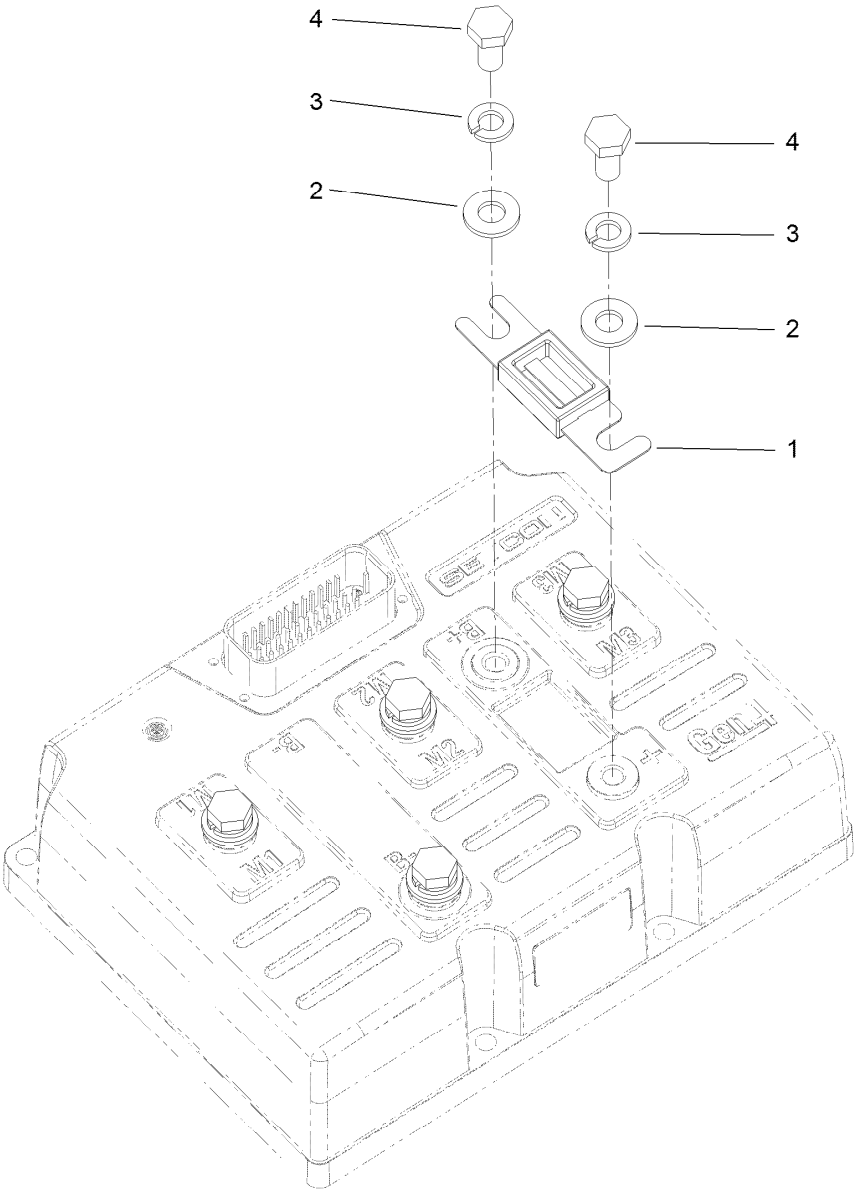


# Sevcon Controller Assembly No. 137-9898

| *Ref.* | *Part Number* | *Qty.* | *Description* |
|---|---|---|---|
| 1 | 131-8494 | 1 | Fuse-425 Amp |
| 2 | 33094-00 | 6 | Washer-Plain |
| 3 | 3253-4 | 6 | Washer-Lock |
| 4 | 33114-016 | 6 | Screw-HH |

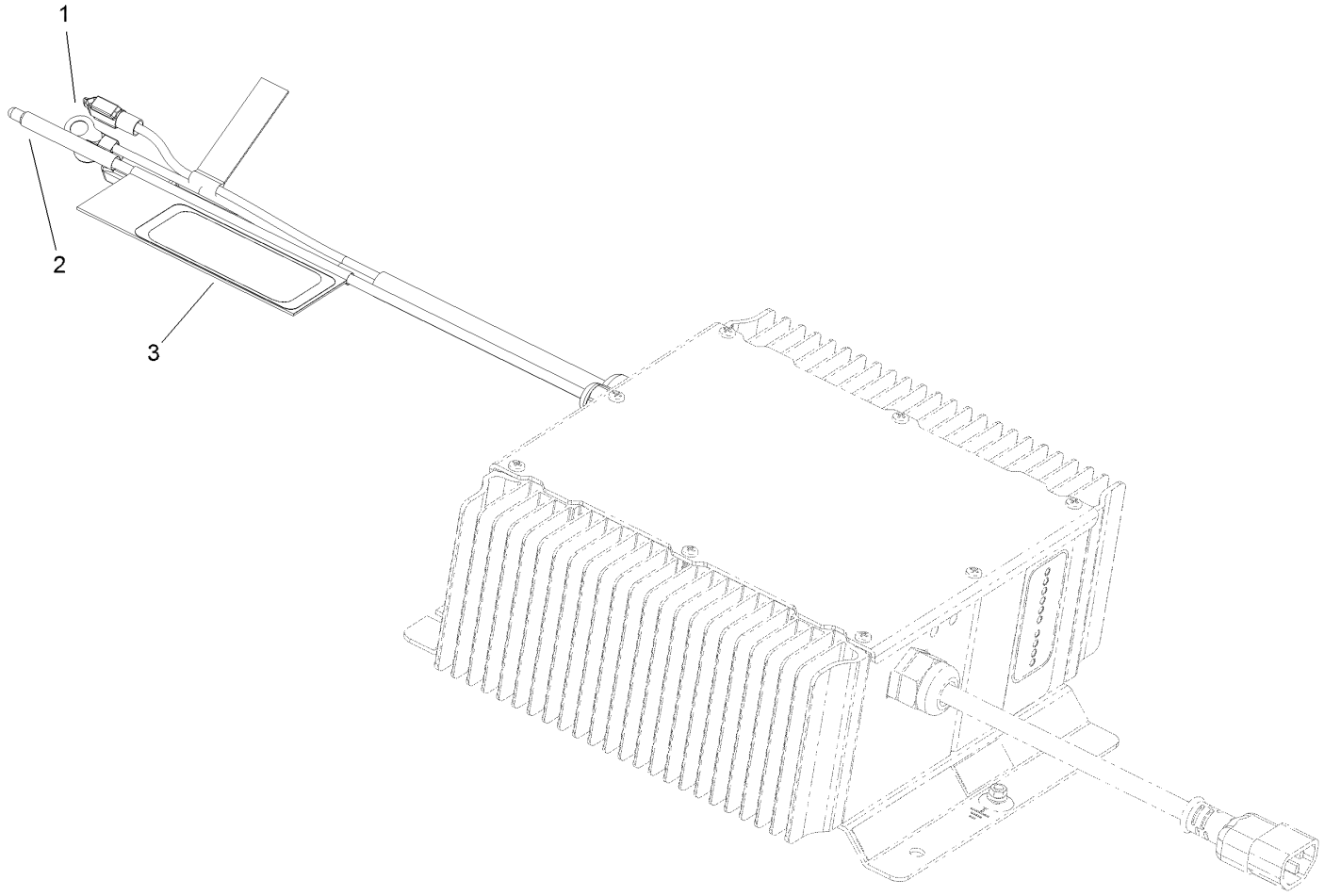


# Onboard Charger Assembly No. 131-8490

| *Ref.* | *Part Number* | *Qty.* | *Description* |
|---|---|---|---|
| 1 | 131-8511 | 1 | Thermister Repair Kit |
| 2 | 131-8512 | 1 | Remote LED |
| 3 | 131-8495 | 1 | Decal-Function, Charger |

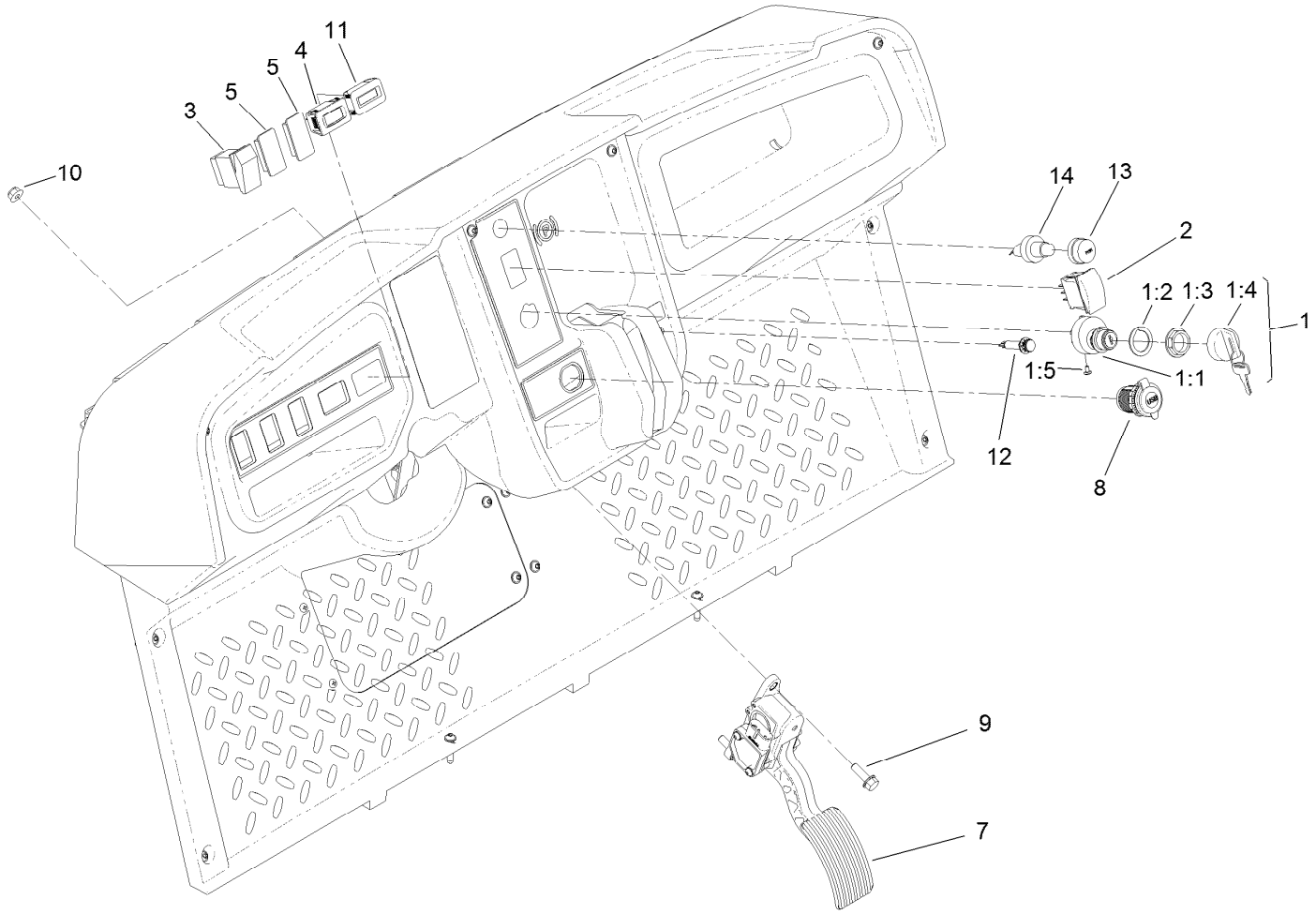


# Accelerator Pedal and Key Switch Assembly

| Ref. | Part Number | Qty. | Description |
|---|---|---|---|
| 1 | 120-4815 | 1 | 48V Key Switch ASM |
| 1:1 | | 1 | Switch-Key ● |
| 1:2 | 108-8659 | 1 | Washer-Backup |
| 1:3 | 108-8660 | 1 | Nut-Mounting |
| 1:4 | 106-5270 | 1 | Ignition Key Set |
| 1:5 | 3250-28 | 3 | Screw |
| 2 | 122-0784 | 1 | Switch-Rocker, On-Off-On |
| 3 | 95-8999 | 1 | Switch |
| 4 | 120-2244 | 1 | Hourmeter |

| Ref. | Part Number | Qty. | Description |
|---|---|---|---|
| 5 | 99-7420 | 2 | Plug-Hole |
| 7 | 121-9675 | 1 | Pedal-Accelerator |
| 8 | 131-8388 | 1 | Socket-USB |
| 9 | 3234-29 | 3 | Screw-HHF |
| 10 | 104-8300 | 3 | Nut-HF, NI |
| 11 | 131-8381 | 1 | Gauge-Battery |
| 12 | 140-4603 | 1 | Light-Indicator |
| 13 | 112-3324 | 1 | Switch-Horn |
| 14 | 112-3313 | 1 | Nut-Weatherproof |

● Not serviced separately

# Attachments and Accessories

## For 07412EX Workman GTX Electric Utility Vehicle with Extended Chassis

| Product Name | Model/Part |
|---|---|
| Workman GTX 2-Person Canopy | 07921 |
| Workman GTX 4-Person Canopy | 07922 |
| 48V Electric Lift Kit | 07143 |
| Door Mount Mirror Kit | 136-1997 |
| Brush Guard Kit | 07145 |
| Front Hitch Kit, Workman GTX Series Utility Vehicles with Brush Guard | 07146 |
| Small Seat Cover | 131-6690 |
| Front Hitch Kit, Workman GTX or MDX Series Utility Vehicles without Brush Guard | 07147 |
| Extended Bed Kit | 07149 |
| Storage Box Kit | 07156 |
| Brake and Signal Light Kit | 132-8579 |
| Walk Spreader Mounting Kit | 07029 |
| 6in L-Track Kit | 07158 |
| 2in L-Track Kit | 07159 |
| Hose Reel Mounting Kit | 07027 |
| Aggressive Tire Kit | 07423 |
| Hand Pump Hose Asm | 131-8522 |
| Horn Kit | 133-3017 |
| Beacon Kit | 130-5484 |
| Reverse Alarm Kit | 131-8549 |
| Power Point Kit | 131-8550 |
| Exterior Mirror Kit | 130-5448 |
| Power Converter Kit | 133-0959 |
| Trash Can Mounting Kit | 07028 |
| Bed Rack Kit | 07031 |
| Cab Kit | 07142 |
| Canopy Kit, Multi-passenger Workman GTX Utility Vehicle | 07141 |
| Mount-Ball | 133-7116 |
| Road Light and Homologation Kit | 133-7128 |
| 48V 6 Foot Bed Electric Lift Kit | 07168 |
| Tire-20 8.00-10 | 116-7333 |
| Cab Mount Kit, Workman GTX Utility Vehicle with Extended Flatbed | 133-7198 |
| Service Hood ASM | 133-7209 |
| ROPS Kit | 07032 |
| Cargo Bed Kit | 07046 |
| Bench Seat Base Kit | 07047 |
| Bucket Seat Base Kit | 07048 |
| Extension Kit | 07049 |
| Small Bedrack Mount Grip Kit | 136-6311 |
| Large Bedrack Mount Grip Kit | 136-6312 |
| Deionizer-Water | 137-2884 |
| Plate-Skid | 137-2887-03 |
| Ignition Switch ASM (Key1) | 138-3505 |
| Ignition Switch ASM (Key2) | 138-3506 |
| Ignition Switch ASM (Key3) | 138-3507 |
| Ignition Switch ASM (Key4) | 138-3508 |

# Attachments and Accessories (continued)

Ignition Switch ASM (Key5) ..... 138-3509
Glove Box Cover Kit ..... 137-2883
Steel Bed Side Kit ..... 07180
Tube Sides Kit ..... 07181
Fold-Down Rear Facing Seat ..... 07123
Tire/Wheel Asm ..... 131-8319
Van Box ..... 07440
Folding Windshield Kit, Workman GTX Utility Vehicle with Canopy ..... 07923
Work Light Kit ..... 130-5485
Interior Mirror Kit ..... 130-5449
Tire ..... 94-5236
Windshield Washer Fluid Kit, 2015 and after Workman MD/HD Series Utility Vehicle ..... 130-5615
Wide Angle Mirror Kit ..... 133-1009
Wide Angle Mirror Kit ..... 133-1038
Bracket-Mount, Radio ..... 133-7111-03
Wireless Hourmeter Finish Kit ..... 139-4627
GTX Ball Cage ROPS, Certified ..... 07161
Canopy W/ ROPS ..... 07169
Canopy Mount Kit, Workman GTX Utility Vehicle with Extended Flatbed ..... 07199
Full Shelf For Van Box ..... 07441

TORO®

Count on it.