FORM NO. 3320–825

TORO®

MODEL NO. 20764B - 4900001 & UP
MODEL NO. 20766B - 4900001 & UP

OPERATOR'S MANUAL

53 CM RECYCLER®
Mower

ENGLISH

⚠ SAFETY INSTRUCTIONS

WARNING: Engine exhaust contains carbon monoxide which is an odorless, deadly poison. Carbon monoxide is also known to the State of California , U.S.A., to cause birth defects. Do not run engine indoors or in an enclosed area.

BEFORE OPERATING

1. Read this manual carefully before operating the mower. Become familiar with the controls and proper use of the mower. Never allow children to operate the mower or adults to operate it without proper instructions.

2. Keep everyone, especially children and pets, away from area of operation. Thoroughly inspect area where mower will be used and remove sticks, stones, wire, and debris.

3. Wear long pants and substantial shoes. Do not operate mower while wearing open–toed shoes, jewelry, loose clothing or when barefoot.

4. Check fuel level before starting engine. Do not fill fuel tank indoors, when the engine is running or until engine cools for several minutes after running. Wipe up spilled gasoline before starting engine.

5. Keep all guards, shields, safety devices or optional side discharge chute in place. Repair or replace damaged parts, including decals. Check all safety devices before each use.

6. Traction drive is designed to stop when control bar is released.

7. Disengage the self–propelled mechanism or drive clutch before starting the engine.

WHILE OPERATING

8. Do not run engine indoors.

9. Always maintain secure footing. Keep a firm grip on the handle and walk; never run. Never operate mower in wet grass. Mow only in daylight or in good artificial light.

10. Mow across the face of slopes; never up and down. Use extreme caution when changing direction on slopes. Do not mow excessively steep slopes.

11. Always wear safety glasses or eye shields during operation to protect eyes from foreign objects that may be thrown from the machine. Keep face, hands, and feet away from the mower housing and cutter blade when the engine is running. Stay behind the handle until the engine stops.

12. When bagging grass, stop engine and ensure discharge door is closed before the bag is removed and emptied.

13. Shut engine off and wait for all moving parts to stop before unclogging discharge tunnel, removing grass bag or discharge tunnel plug.

14. Since the blade rotates for a few seconds after the engine is stopped, stay behind the handle until all moving parts stop.

15. After striking a foreign object or if mower vibrates abnormally, stop engine and remove wire from spark plug. Check mower for damage and make all repairs before using mower again.

16. Stop the engine before adjusting the height-of-cut.

17. Stop the engine when crossing a gravel driveway, road, or sidewalk.

18. Stop engine before leaving the operator's position—behind the handle. Disconnect wire from spark plug if mower will be unattended or not used.

19. Do not touch engine while it is running or shortly after it is stopped because engine will be hot enough to cause a burn.

20. Refuel only after engine is cool.

MAINTENANCE

21. Perform only those maintenance instructions described in this manual. If major repairs are ever needed or if assistance is desired, contact your local Authorized TORO Service Dealer.

22. Before mower is cleaned, inspected, serviced or adjusted, stop engine and disconnect wire from spark plug. Keep wire away from plug to prevent accidental starting.

23. To ensure the mower is in safe operating condition, frequently check and keep all nuts, bolts, and screws tight. Ensure blade bolt is tightened to 50 ft–lb (68 N·m).

24. To reduce fire hazard, keep engine free of excessive grease, grass, leaves, and accumulations of dirt.

25. Check grass catcher bag frequently for wear or deterioration. Replace with a new bag when worn or damaged for your protection. Check that replacement bags comply with TORO's original recommendations or specifications.

©The Toro Company-1993
All Rights Reserved

SAFETY INSTRUCTIONS

26. Allow engine to cool before storing mower in any enclosure. Do not store mower near any open flame or where gasoline fumes may be ignited by a spark.

27. Do not overspeed the engine by changing governor settings.

28. At the time of manufacture, the mower conformed to the safety standards in effect for rotary mowers. To ensure best performance and continued safety certification of the mower, use genuine TORO replacement parts and accessories. Replacement parts and accessories made by other manufacturers may result in non–conformance with the safety standards, and that could be dangerous.

SAFETY SYMBOL GLOSSARY



Safety alert



Keep hands and feet away from rotating blade



Engine speed (Throttle)



Ignition off



Traction drive ENGAGED



Traction drive DISENGAGED



Keep bystanders from area being mowed



Neutral



Choke on



Fast



Slow



Stop engine before leaving operator position



Locked



Unlocked



Keep all guards in place



Pull wire off spark plug and read your operator's manual before doing any maintenance or service

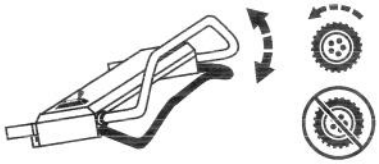

Squeeze control bar against handle to engage traction drive



Read and understand operator's manual

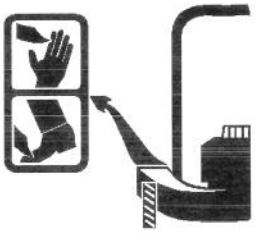

Do not stick hands or feet into discharge tunnel

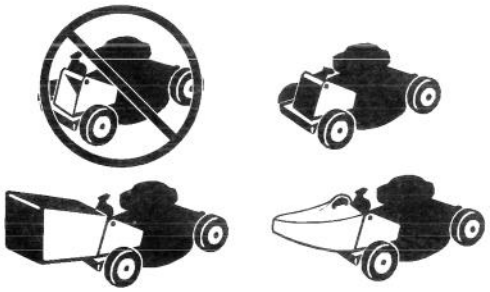

Never operate mower unless discharge tunnel plug, grass bag or side discharge attachment is installed



Never open chute door on mower when engine is running, unless grass bag or side discharge attachment is installed

TABLE OF CONTENTS

	Page
Set–Up Instructions	3
Before Operating	4
Recycler® Mower Tips	6
Operating Instructions	8
Maintenance	11
Servicing Air Cleaner	11
Replacing Spark Plug	12
Draining Gasoline	12
Changing Crankcase Oil	12
Adjusting Throttle	13
Adjusting Wheel Drive	13
Inspecting/Removing/Sharpening Blade	14
Lubrication	15
Charging Battery	15
Cleaning Mower Housing, Discharge Tunnel, Belt Cover and Plug	15
Preparing Mower For Storage	16
Product Identification	17
Toro Service Support	17
Optional Equipment	17
The Toro Starting Guarantee	18
Guaranteed To Start Maintenance Record	19

SET–UP INSTRUCTIONS

INSTALL HANDLE

1. Align handles and tighten handle knobs (Fig. 1). Bend handle latches slightly toward each other (Fig. 1).

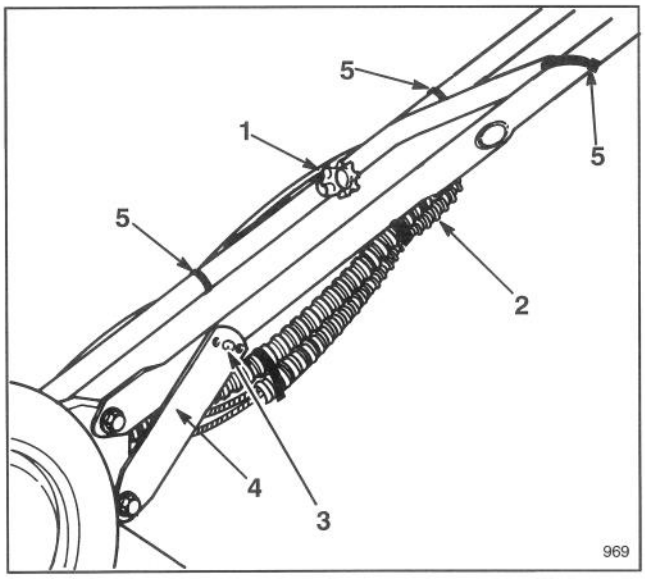

Figure 1

1. **Handle knob**
2. **Control cable**
3. **Handle stud**
4. **Handle latch**
5. **Cable tie**

2. Pivot handle backward until handle stud snaps into center hole of handle latch (Fig. 1). If handle height is not satisfactory, adjust by placing handle stud into a different hole. Secure control cables in position with cable ties.

INSTALL DISCHARGE TUNNEL PLUG

1. Make sure engine is off.

2. Open the discharge door by pulling forward on the handle and moving it rearwards (Fig. 2). Hold the discharge door handle to prevent the spring-loaded door from closing while inserting the plug.

3. Since the plug is slightly wider than the discharge tunnel opening, rotate the plug clockwise slightly while inserting it (Fig. 2). Make sure the arrow on the plug decal is pointing upwards.

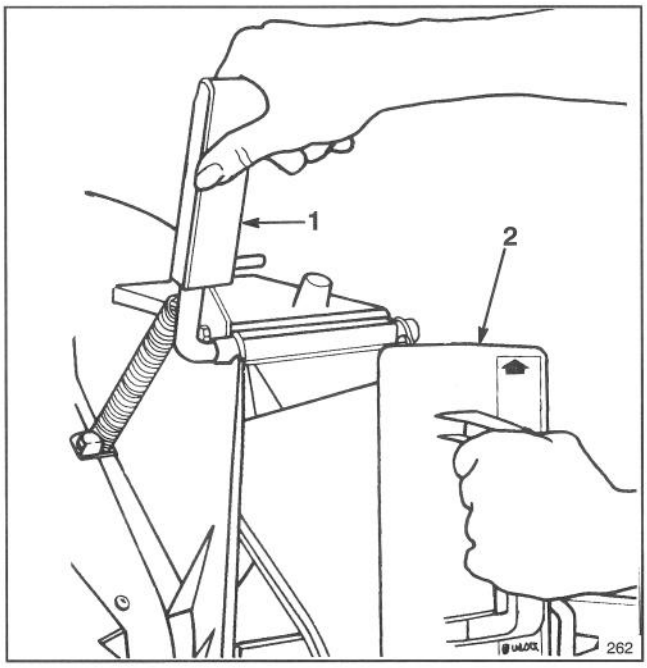

Figure 2

1. **Discharge door handle**
2. **Plug rotated clockwise**

4. Push the plug all the way in until the spring clip on the bottom of the plug clicks into place, locking the plug securely into the discharge tunnel (Fig. 3). Release discharge door handle to lock top of plug.

SET-UP INSTRUCTIONS

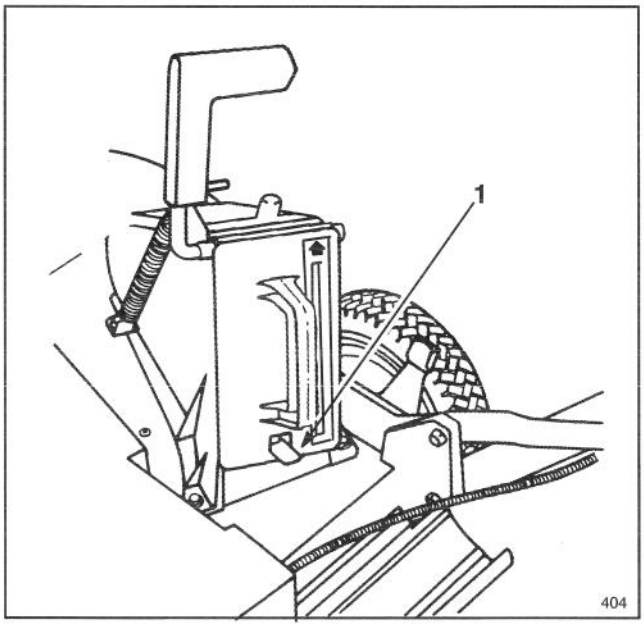

Figure 3

1. Spring clip

INSTALL BATTERY (electric start model)

1. Refer to Charging Battery, page 15. Slide battery, decal side up, between mounting tabs on back of control panel and connect wires (Fig. 4). Insert key into switch when ready to start engine.

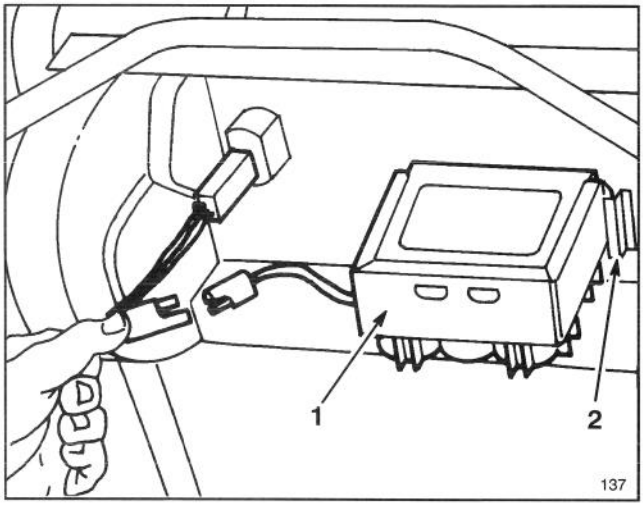

Figure 4

1. Battery **2. Mounting tab**

BEFORE OPERATING

FILL CRANKCASE WITH OIL

Fill crankcase with SAE 30 or 10W30 oil until oil level reaches FULL mark on dipstick as shown in Figure 5. The maximum crankcase capacity is 25 ounces (0.75 liters) of oil. Use any high quality detergent oil having the American Petroleum Institute (API) "service classification" — SE, SF or SG.

Before each use, ensure oil level is between ADD and FULL marks on dipstick (Fig. 5). Add oil if level is low.

1. Position mower on level surface and clean around oil dipstick.

2. Remove dipstick by rotating cap counterclockwise 1/4 turn.

3. Wipe dipstick and insert it into filler neck. Rotate cap clockwise 1/4 turn. Then remove dipstick and check level of oil (Fig. 5). If level is low, add only enough oil to raise level to FULL mark on dipstick. **DO NOT FILL ABOVE FULL MARK BECAUSE ENGINE COULD BE DAMAGED WHEN STARTED. POUR OIL SLOWLY.**

4. Insert dipstick into filler neck and rotate cap clockwise 1/4 turn to lock.

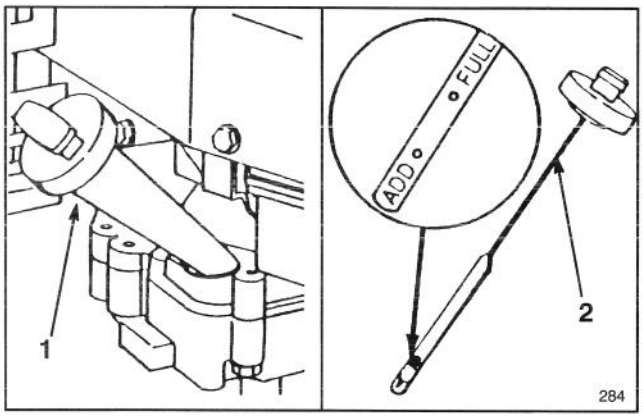

Figure 5

1. Oil fill tube **2. Dipstick**

Note: Check oil level each time mower is used or after every 5 operating hours. Initially, change oil after the first 2 hours of operation; thereafter, change oil after every 25 hours of operation. More frequent oil changes are required in dusty or dirty conditions.

BEFORE OPERATING

WARNING

DANGER: Gasoline is extremely flammable and explosive under certain conditions. Do not smoke when handling fuel and keep fuel far away from open flames and sparks. Never buy more than a 30 day supply of gasoline. Store it in an approved container. Keep gasoline out of reach of children.

Refuel outdoors and only when engine is cold. Do not fill the tank full. Fill tank to 1/4" to 1/2" (6 to 13 mm) from top of tank, not into the filler neck. This space is for expansion of fuel. Use funnel or spout to prevent spilling. Wipe up any spilled gas.

FILL FUEL TANK WITH GASOLINE

Note: The Toro Company strongly recommends the use of fresh, clean, **UNLEADED** regular grade gasoline in Toro gasoline powered products. Unleaded gasoline burns cleaner, extends engine life, and promotes good starting by reducing the build-up of combustion chamber deposits. Leaded gasoline can be used if unleaded is not available.

IMPORTANT: DO NOT MIX OIL WITH THE GASOLINE. NEVER USE METHANOL, GASOLINE CONTAINING METHANOL, GASOHOL CONTAINING MORE THAN 10% ETHANOL OR WHITE GAS BECAUSE ENGINE FUEL SYSTEM DAMAGE COULD RESULT.

Toro recommends that a fuel stabilizer be used regularly in all Toro gasoline powered products during operation and storage seasons. Stabilizers clean the engine during operation and prevent gum-like varnish deposits from forming in the engine during periods of storage.

Do not use fuel additives other than those manufactured for fuel stabilization during storage. Toro does not recommend stabilizers with an alcohol base such as ethanol, methanol or isopropyl. Stabilizers should not be used to try to enhance the power or performance of machine.

1. Clean around fuel tank cap and remove cap from tank (Fig. 6). Using unleaded gasoline, fill fuel tank to within 1/4 to 1/2 inch (6 to 13 mm) from top of tank, not into filler neck. Do not fill tank full.

2. Open vent screw on top of fuel tank cap (Fig. 6) by rotating screw counterclockwise.

Note: Vent screw should only be closed when tipping mower for blade and housing maintenance or when draining oil.

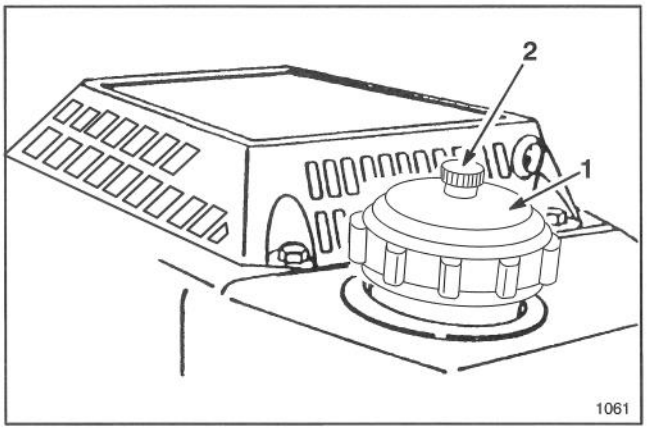

Figure 6

1. Fuel tank cap **2. Vent screw**

3. Reinstall fuel tank cap and wipe up any spilled gasoline.

4. Open fuel shut-off valve on engine (Fig. 7).

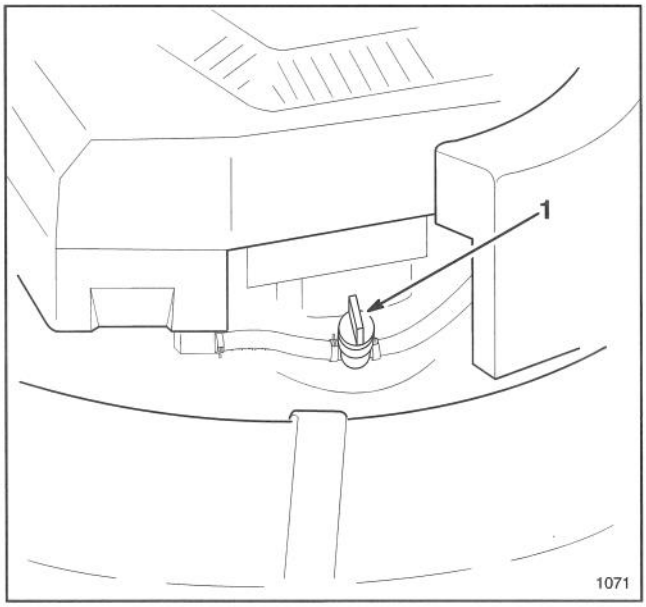

Figure 7

1. Fuel shut-off valve

RECYCLER® MOWER TIPS

RECYCLER® MOWER FEATURES

The Toro Recycler® mower has a completely different cutting concept that leaves your lawn with a bagged look without bagging clippings.

Your Recycler® mower is equipped with special parts which increase your mower's ability to cut and recut grass clippings, leaves, and other yard debris into tiny particles and inject them down into the grass. These parts are:

A. A special blade and accelerator (Fig. 8)

B. Three "kicker plates" positioned on the underside of the mower deck in strategic positions (Fig. 8)

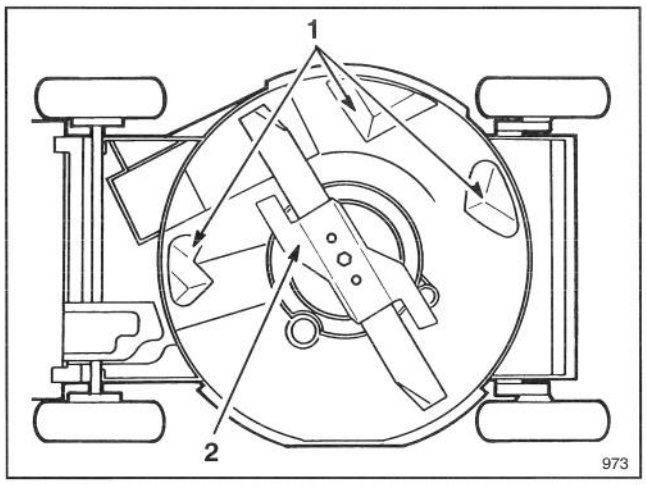

Figure 8

1. Kicker plates **2. Accelerator**

C. A plug which locks into the mower's discharge tunnel (a fourth kicker is on the plug) (Fig. 9)

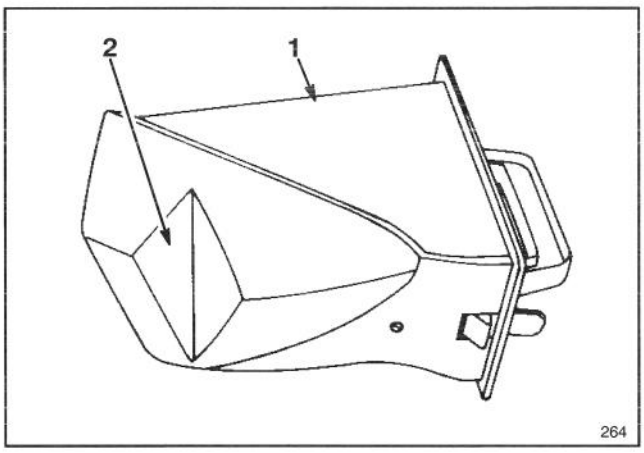

Figure 9

1. Plug **2. Kicker**

The blade and three kicker plates are permanent parts of your mower. The blade should be removed only for sharpening or replacement. The kickers should never be removed, unless they need to be replaced. They do not interfere with the normal bagging or optional side discharge operations of the mower.

The plug, however, is a removable part, just as the grass bag and optional side discharge chute are removable parts. You cannot use the plug in combination with either the grass bag or the side discharge chute.

It is possible to mow without using the plug by closing the discharge tunnel door. However, your lawn appearance will be much more satisfactory if you use the plug as it has an additional kicker (Fig. 9) that helps drive the clippings down into the grass.

⚠ DANGER

- **Grass clippings and other objects can be thrown from an open discharge tunnel.**
- **Thrown objects can cause serious injury or kill operator or bystanders.**
- **Never start or operate the mower unless one of the following is true:**

  1. The discharge tunnel plug is locked securely in discharge tunnel.

  2. The grass bag is locked in place.

  3. The optional side discharge chute is locked in place.

  4. The discharge tunnel door is locked closed.

⚠ DANGER

- **Wet grass can cause you to slip and contact blade.**
- **Blade contact can seriously injure you.**
- **Mow only in dry conditions.**

⚠ WARNING

- **Operating mower without accelerator in place could cause blade to flex, bend or break.**
- **A broken blade could cause serious injury or death to operator or bystanders.**
- **Do not operate mower without accelerator.**

RECYCLER® MOWER TIPS

TIPS FOR CUTTING GRASS CLIPPINGS

Even with the Recycler® mower, you may encounter conditions where it is not possible to hide all of the finely cut clippings or leaves all of the time down in the grass. Follow these instructions for the best cutting results and lawn appearance:

- Maintain a **sharp blade** throughout the cutting season. Periodically file down nicks on blade.
- Clean any residue from the underside of mower housing, kickers, and plug after each use. See Cleaning Mower Housing, Discharge Tunnel, Belt Cover and Plug, page 15.
- When cutting grass over 6" tall, you may want to cut the lawn twice to hide clippings down in the grass.
- In the heat of the summer, it is generally best to cut grass at the C, D or E height-of-cut settings. Only about 1/3 of the grass blade should be cut. Cutting below the C setting is not recommended unless grass is sparse or it is late fall when grass growth begins to slow down. If long grass must be cut, you may need to use a higher height–of–cut setting and a slower walking speed; then recut the grass at a more normal setting. If grass is too long and leaves clumps on top of lawn, mower may plug and cause engine to stall.
- Alternate mowing direction. This helps disperse clippings over lawn for even fertilization.

If the finished cut lawn appearance is unsatisfactory, try one or more of the following:

- Sharpen the blade.
- Walk at a slower pace while mowing.
- Raise the height-of-cut setting on your mower.
- Cut your grass more frequently.
- Overlap cutting swaths instead of cutting a full swath with each pass.
- Mow across the marginal areas a second time.
- Set height-of-cut on front wheels one notch lower than rear wheels. (example: set front wheels at "C" setting and rear wheels at "D" setting)

TIPS FOR CUTTING LEAVES

You can cut up leaves in the fall instead of bagging. If you decide to bag, the Recycler® mower reduces the number of leaf bags you will need by finely chopping up the leaves before they are bagged. Some leaf particles will be injected back down into the soil. When spring arrives, the leaf particles will have decomposed and returned valuable nutrients to the soil.

- Ensure leaves are dry.
- When cutting is complete, always be sure that 50% of the lawn shows through the cut leaf cover. This may require one or more passes over the leaves.
- For light leaf coverage, position all wheels at the same height-of-cut setting.
- If there are more than five inches of leaves on lawn, set the front wheels one or two notches higher than the rear wheels. This makes it easier to feed leaves under mower deck.
- Walk at a slower mowing speed if leaves are not being cut up finely enough to be hidden down in the grass.
- If you cut up a lot of oak leaves, you might want to add lime to your grass in the spring. Lime reduces the acidity of oak leaves.

OPERATING INSTRUCTIONS

OPERATING TIPS

1. CHECK OIL LEVEL—Maintain oil level between ADD and FULL marks as shown on dipstick (Fig. 5).

2. BEFORE EACH MOWING—Ensure self–propelled drive and control bar functions properly. When control bar is released, self-propelled drive is designed to stop.

STARTING, STOPPING AND SELF-PROPELLING

1. CONTROLS—Key switch (electric start model), throttle, ground speed control, control bar and recoil starter are on upper handle (Fig. 10).

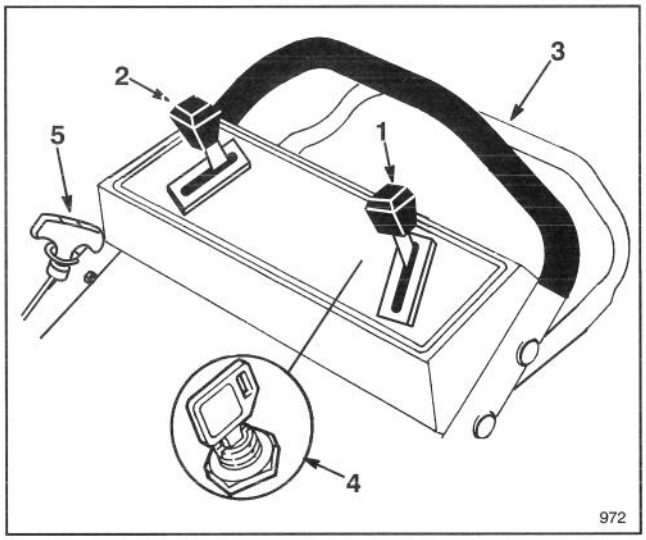

Figure 10

1. **Throttle control**
2. **Ground speed control**
3. **Self-propelled control bar**
* 4. **Key switch**
5. **Recoil starter**

* **electric start model**

2. Push spark plug wire onto spark plug.

3. Open fuel shut-off valve (Fig. 7) if it is not already open.

4. Move ground speed control to Ⓝ and throttle to ⚠ (CHOKE).

5. KEY–LECTRIC STARTING—Turn key to ⚙ (START) and release when engine begins running. When engine starts, remove throttle from ⚠ (CHOKE) and regulate engine speed as desired. If the battery's charge is too weak to start the engine, the engine can be started with the recoil starter (Fig. 10).

6. MANUAL STARTING—Move ground speed control to Ⓝ and throttle to ⚠ (CHOKE). Pull recoil starter out until positive engagement results; then pull vigorously to start the engine. When engine starts, remove throttle from ⚠ (CHOKE) and regulate engine speed as desired.

7. GROUND SPEED (Fig. 10)—Ground speed varies depending on distance between control bar and handle. The mower has three ground speeds: number "1" is slow, "2" is medium, and "3" is a fast walking pace. Move ground speed control to desired setting. Ground speed can be varied by increasing or decreasing distance between control bar and handle. Lower control bar to slow mower when making a turn or if mower is moving too fast for you. If you lower control bar too far, the mower will stop self-propelling. Squeeze control bar closer to handle to increase ground speed. When control bar is tight against handle, mower will self-propel at maximum ground speed. Move ground speed control to Ⓝ when using the mower for trimming and whenever leaving mower.

8. WHEEL TRACTION OPERATION (Fig. 11)—Move control bar into the RUN/SHIFT position. Move ground speed control to desired setting and squeeze control bar against handle to drive.

Note: Do not shift speeds while control bar is squeezed against handle in the DRIVE position; the transmission could burn out. Move control bar to the RUN/SHIFT position (Fig. 11) when changing ground speed.

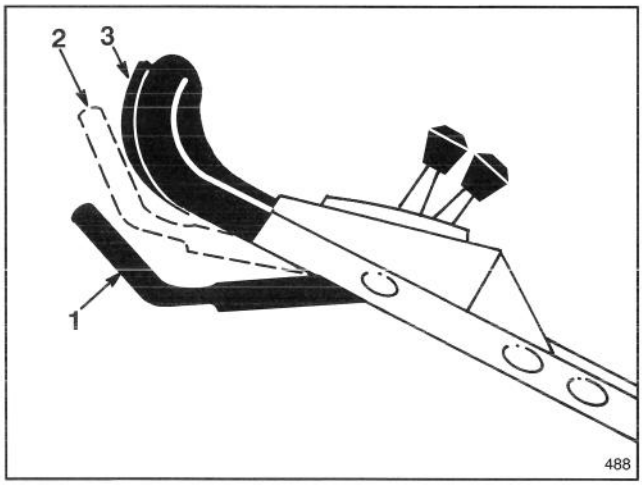

Figure 11

1. **Control bar**
2. **RUN/SHIFT position**
3. **DRIVE position**

Note: The drive wheels are equipped with freewheeling clutches which enable the mower to be pulled rearward easier when the wheel drive is disengaged. To disengage the clutches, mower must be pushed forward at least 2,5 cm (1") after wheel drive operation has stopped.

9. STOPPING—To stop engine, move throttle to ⊗ (OFF position). Remove key from switch on electric start model. Pull wire off spark plug if mower will be unattended or not used.

OPERATING INSTRUCTIONS

USING DISCHARGE TUNNEL PLUG

1. Make sure engine is off. Open the discharge door by pulling forward on the handle and moving it rearwards (Fig. 12). Hold the discharge door handle to prevent the spring-loaded door from closing while inserting the plug.

2. Since the plug is slightly wider than the discharge tunnel opening, you must rotate the plug clockwise slightly while inserting it (Fig. 12). Make sure the arrow on the plug decal is pointing upwards.

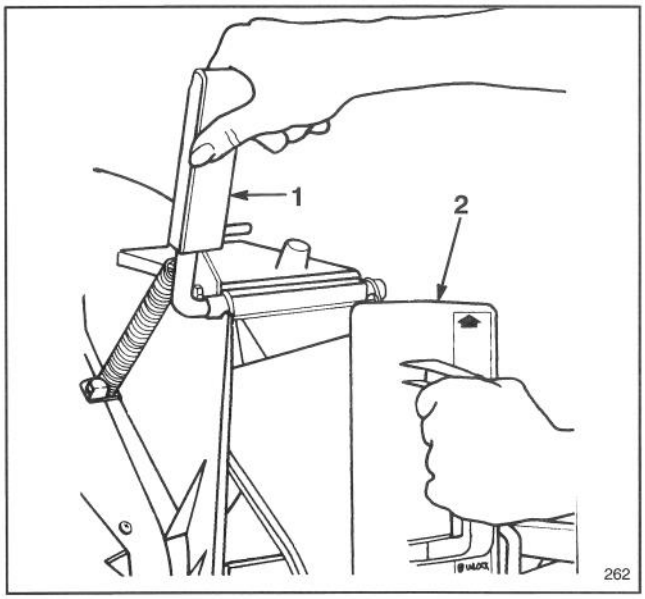

Figure 12

1. Discharge door handle **2. Plug rotated clockwise**

3. Push the plug all the way in until the spring clip on the bottom of the plug clicks into place, locking the plug securely into the discharge tunnel (Fig. 13). Release the discharge door handle to lock the top of the plug.

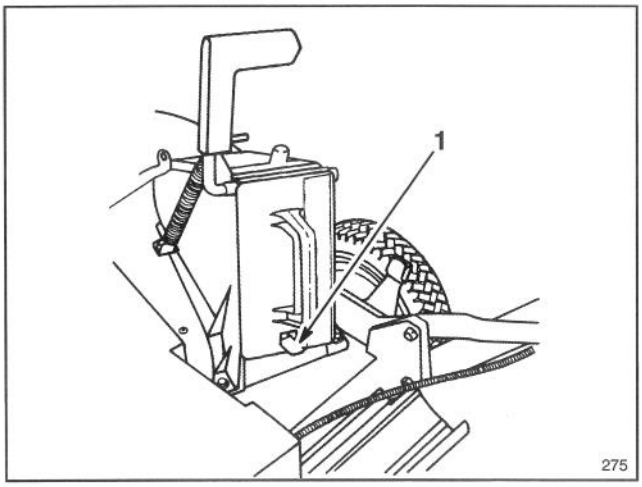

Figure 13

1. Spring clip

4. To remove the plug, move the discharge door handle rearwards while at the same time lift up the spring clip on the bottom of the plug. When the plug is unlocked, pull it out of the discharge tunnel.

USING GRASS BAG

Occasionally you may wish to use the grass bag for bagging extra long grass, lush grass or leaves.

1. Stop engine and wait for all moving parts to stop. Remove key from switch on electric start model.

2. Ensure discharge door handle is fully forward and pin is engaged in catch (Fig. 14).

3. INSTALLING BAG—Slide hole in bag frame onto retaining post on housing (Fig. 14) and set rear of bag frame onto lower handle.

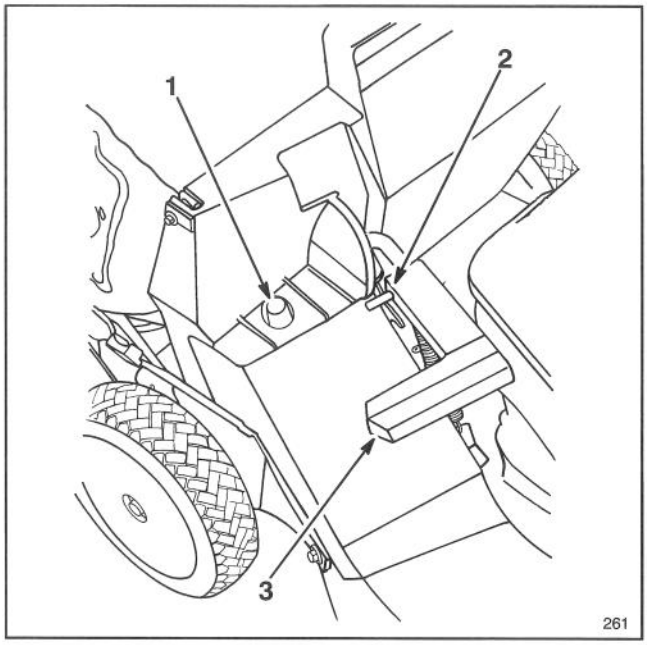

Figure 14

1. **Bag frame on retaining post**
2. **Pin engaged in catch**
3. **Handle fully forward. Discharge door closed.**

4. Pull discharge door handle forward until pin clears catch and move handle rearward until pin locks in bag notch (Fig. 15). Discharge door in mower housing is now open.

5. EMPTYING BAG—Stop engine and wait for all parts to stop. Raise discharge door handle and move it forward to engage the locking pin with catch (Fig. 14). Grasp handle at front and rear of bag and lift bag off mower. Gradually tip bag forward to empty clippings.

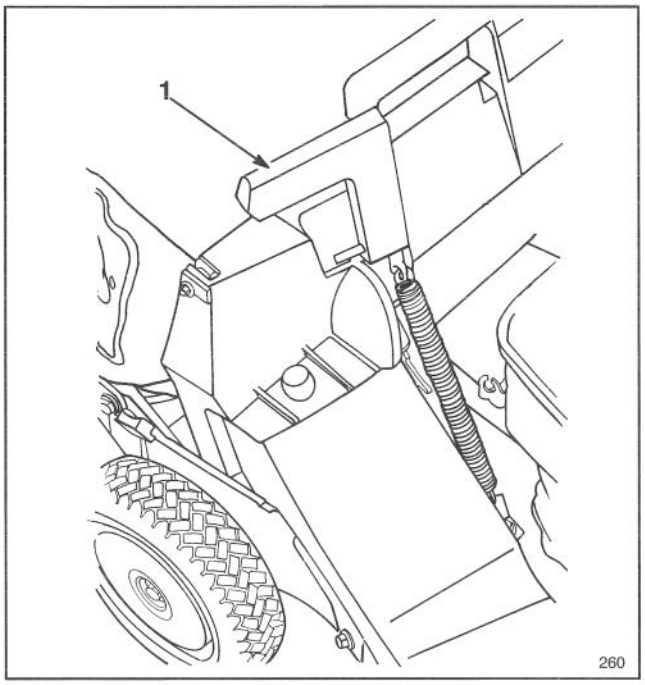

Figure 15

1. **Pin locked in bag notch**

⚠ DANGER

- **Grass clippings and other objects can be thrown from an open discharge tunnel.**
- **Objects thrown with enough force could cause serious personal injury or death to operator or bystander.**
- **Never open door on discharge tunnel when engine is running unless the grass bag, optional side discharge attachment or discharge tunnel plug is securely installed.**

⚠ DANGER

- **A worn grass bag could allow small stones and other similar debris to be thrown in operator's or bystanders direction.**
- **Thrown objects can cause serious personal injury or death to operator or bystanders.**
- **Check the grass bag frequently. If it is damaged, install a new genuine TORO replacement bag that has this or a similar warning.**

6. To reinstall bag, repeat steps 3-4.

⚠ DANGER

- **Thrown objects may result if discharge door does not close completely.**
- **Thrown objects can cause serious personal injury or death.**
- **If discharge door cannot be closed because grass clippings clog discharge area, stop engine and gently move discharge door handle back and forth until door can be closed completely. Do not force discharge door closed because door or handle may be damaged. If door still cannot be closed, remove obstruction with a stick, not your hand.**

SETTING HEIGHT–OF–CUT

Toro's exclusive SmartWheel™ provides a simple method for determining the proper cutting height.

The SmartWheel has two cutting scales — SPARSE/NORMAL and LUSH — to ensure the best height–of–cut setting in any mowing condition (Fig.16). Use the SPARSE/NORMAL scale during the warm summer season for the majority of your mowing. The LUSH scale is for thick, moist, succulent grass that grows most often in the spring.

In general, it is recommended that:

- Grass length should usually be cut at the C, D or E settings or maintained at two to three inches in height.
- Cutting below the C setting is not recommended unless grass is sparse or it is late fall when grass growth begins to slow down. When cutting long grass, you may need to use a higher height–of–cut setting and a slower walking speed; then recut the grass at a more normal setting. If grass is too long and leaves clumps on top of lawn, mower may plug and cause engine to stall.
- The SmartWheel calculates the proper setting to ensure that no more than 1/3 of the grass blade is cut off.

⚠ DANGER

- **Adjusting height-of-cut levers could bring hands into contact with moving blade.**
- **Contact with moving blade could cause serious personal injury.**
- **Do not adjust height-of-cut settings when engine is running and blade is rotating.**
- **Do not put fingers under housing to lift mower when adjusting height-of-cut levers.**

OPERATING INSTRUCTIONS

1. Before starting the engine and beginning to mow, push the mower into the grass. Stop when the letters on the SmartWheel™ design on the rear left wheel are upright (Fig. 16).

2. Using the color coded SmartWheel design (Fig. 16), compare the tips of the grass blades to the colors/letters on the wheel. Whichever color/letter the tips of the grass blades correspond with is the proper cutting height.

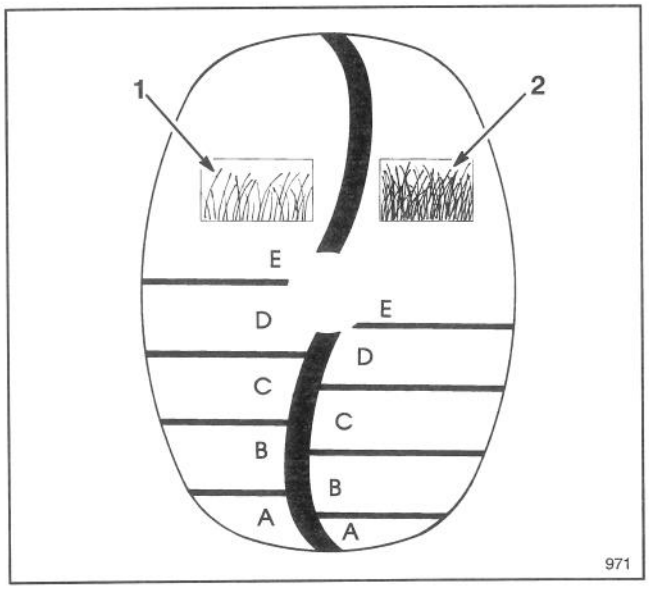

Figure 16

1. **Sparse/normal grass cutting scale**
2. **Lush grass cutting scale**

3. Squeeze mower's height-of-cut lever toward wheel and move it to the corresponding color/letter on mower housing (Fig. 17). For easier adjustment, lift housing up so wheel is off ground. **Do not put fingers under housing when lifting.** Ensure pin on height-of-cut lever engages slot in housing. Adjust all wheels to the same color/letter setting.

Note: Front wheels can be adjusted to 3,8 cm (1/2 inch). Move height-of-cut lever past "A" and release pin into slot in housing.

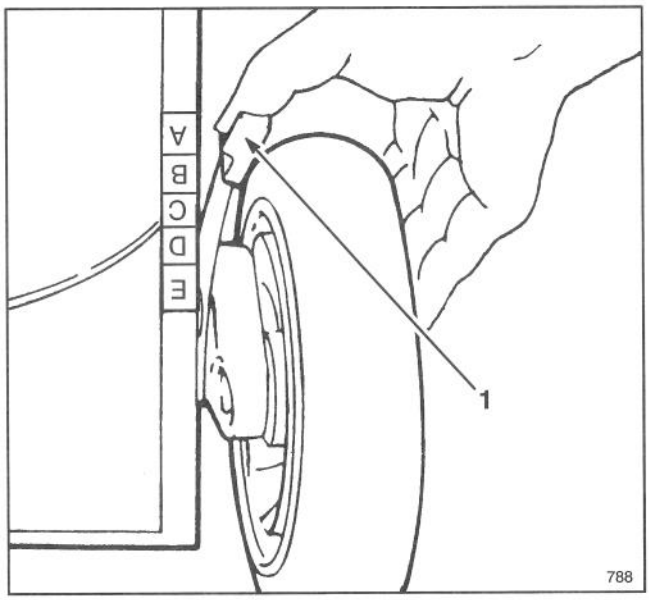

Figure 17

1. **Height-of-cut lever**

MAINTENANCE

⚠ CAUTION

- **Engine could start accidentally.**
- **Accidental starting of engine could cause serious injury to operator or bystanders.**
- **Pull wire off spark plug before performing any maintenance or adjustments.**

SERVICING AIR CLEANER

Normally, clean air cleaner after every 25 operating hours. More frequent cleaning is required when mower is operated in dusty or dirty conditions.

1. Stop engine and pull wire off spark plug. Remove key from switch on electric start model.

2. Rotate knob securing air cleaner cover to engine until cover can be removed. Clean cover thoroughly (Fig. 18).

3. If the foam element is dirty, remove it from air cleaner body (Fig. 18). Clean thoroughly.

A. WASH foam element in a solution of liquid soap and warm water. Squeeze to remove dirt, but do not twist because foam may tear. Rinse thoroughly in clear water.

B. DRY by wrapping in a clean rag. Squeeze rag and foam element to dry.

C. SATURATE element with approximately 5 ounces (150 ml) of SAE 30 engine oil. Squeeze element to remove excess oil and to distribute oil thoroughly. A damp element is desirable.

MAINTENANCE

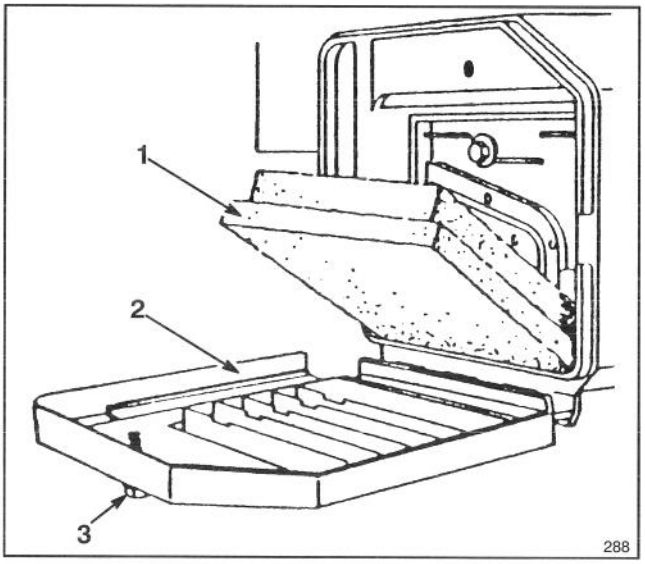

Figure 18

1. Foam element **2. Cover** **3. Knob**

4. Reinstall foam element and air cleaner cover.

IMPORTANT: Do not operate engine without air cleaner element because extreme engine wear and damage will likely result.

REPLACING SPARK PLUG

Use a CHAMPION RC12YC spark plug or equivalent. Correct air gap is 0.030" (0.76 mm). Remove plug after every 25 operating hours and check its condition.

1. Stop engine and pull wire off spark plug.

2. Clean around spark plug and remove plug from cylinder head.

IMPORTANT: Replace a cracked, fouled, or dirty spark plug. Do not sand blast, scrape, or clean electrodes because engine damage could result from grit entering cylinder.

3. Set air gap at 0.030" (0.76 mm) (Fig. 19). Install correctly gapped spark plug and gasket seal. Tighten plug firmly to 14 ft–lb (19 N·m).

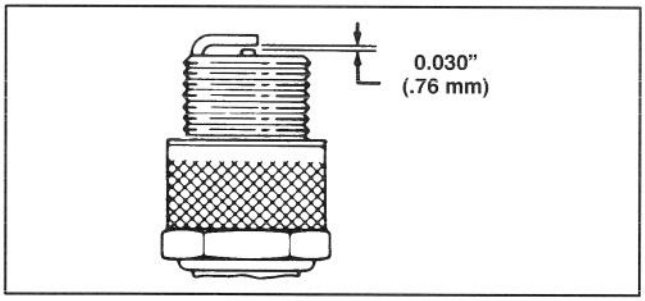

Figure 19

DRAINING GASOLINE

1. Stop engine and wait for engine to cool. Pull wire off spark plug. Remove key from switch on electric start model.

Note: Drain gasoline from a cold engine only.

2. Turn fuel shut-off valve (Fig. 7) to OFF position.

3. Remove cap from fuel tank (Fig. 6) and use a pump-type syphon to drain fuel into clean gas can.

Note: This is the only procedure recommended for draining fuel.

4. Open fuel shut-off valve before using mower again.

CHANGING CRANKCASE OIL

Change oil after the first 2 operating hours and every 25 hours thereafter.

1. Turn fuel shut-off valve (Fig. 7) to OFF position.

2. Turn vent screw on fuel tank cap (Fig. 6) clockwise to close.

3. Run engine until it dies. Try starting engine once more to make sure gas is out of carburetor.

4. Pull wire off spark plug. Remove key from switch on electric start model.

5. If grass bag is installed on mower, close door in mower housing and remove bag.

6. Remove dipstick from oil fill tube and place a drain pan next to left side of mower.

7. Tip mower on its left side, allowing oil to drain into drain pan (Fig. 20).

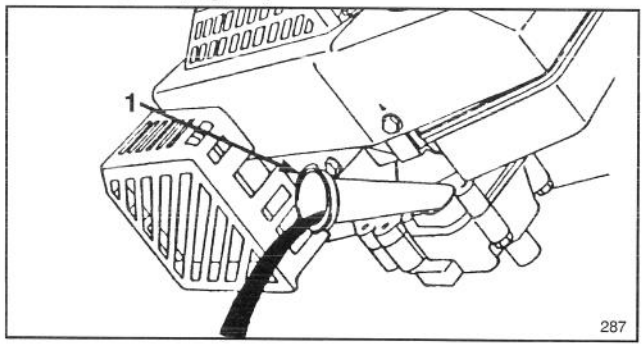

Figure 20

1. Oil fill tube

8. When oil is drained, return mower to upright position and add fresh oil to engine. Refer to Fill Crankcase With Oil, page 4.

9. Open vent screw on fuel tank cap, open fuel shut-off valve and reconnect spark plug wire.

MAINTENANCE

ADJUSTING THROTTLE

Throttle control adjustment may be required if engine does not start or stop. Whenever a new throttle control cable is installed, throttle must be adjusted.

1. Stop engine and pull wire off spark plug. Remove key from switch on electric start model.

2. Move throttle control to (FAST position).

3. Loosen cable clamp screw until throttle cable slides (Fig. 21).

4. Move throttle cable left or right until holes in throttle lever and throttle bracket align (Fig. 21).

5. Pull throttle cable slightly to remove any slack and tighten cable clamp screw to lock adjustment in place.

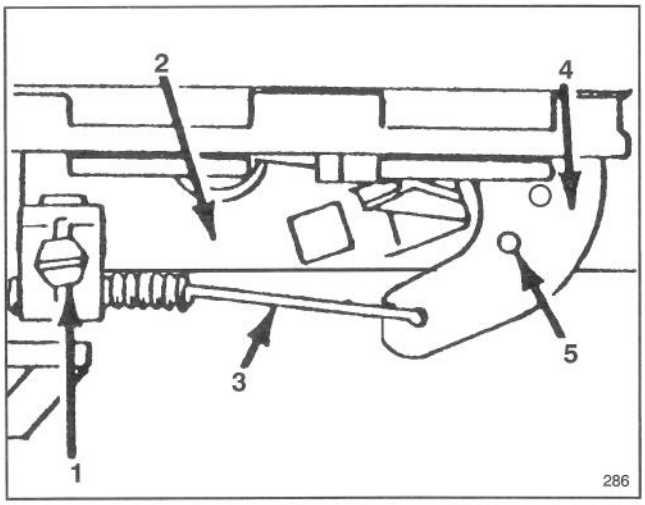

Figure 21

1. **Cable clamp screw**
2. **Throttle bracket**
3. **Throttle cable**
4. **Throttle lever**
5. **Aligned holes**

ADJUSTING WHEEL DRIVE

If mower does not self-propel or self-propels when control bar is **more** than 4 cm (1 1/2 inches) from the handle, adjust wheel drive control knob on rear of gear box.

1. Stop engine and pull wire off spark plug. Remove key from switch on electric start model.

2. If grass bag is installed on mower, close door in mower housing and remove bag.

3. ADJUSTMENT (Fig. 22)—Rotate control knob clockwise 1/2 turn if mower does not self-propel. If mower creeps forward, rotate knob 1/2 turn counterclockwise to loosen belt.

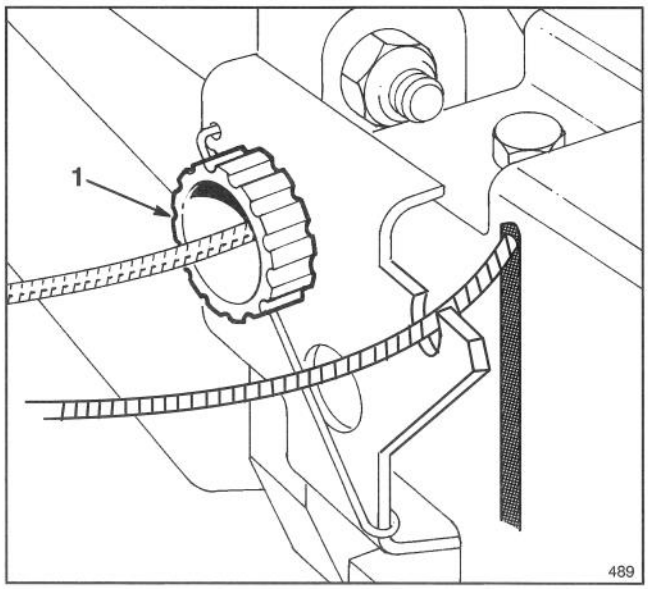

Figure 22

1. **Control knob**

⚠ CAUTION

- **Over-adjusting cable may cause mower to move without engaging traction drive.**
- **Contact with a moving mower could cause serious personal injury to operator or bystanders.**
- **Do not over-adjust wheel drive cable.**

4. CHECK ADJUSTMENT—Adjustment is correct when control bar is about 4 cm (1 1/2 inches) from handle (Fig. 23) and wheels start to turn freely.

5. Repeat steps 2 and 3 until properly adjusted.

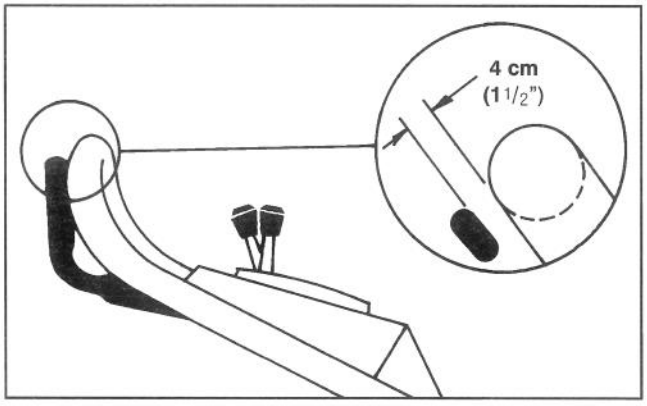

Figure 23

MAINTENANCE

INSPECTING/REMOVING/SHARPENING BLADE

Always mow with a sharp blade. A sharp blade cuts cleanly and without tearing or shredding the grass blades like a dull blade.

1. Turn fuel shut-off valve (Fig. 7) to OFF position.

2. Turn vent screw on fuel tank cap (Fig. 6) clockwise to close.

3. Run engine until it dies. Try starting engine once more to make sure gas is out of carburetor.

4. Pull wire off spark plug. Remove key from switch on electric start model.

5. If grass bag is installed on mower, close door in mower housing and remove bag.

6. Tip mower on its left side (Fig. 24). Avoid rotating blade because starting problems may result.

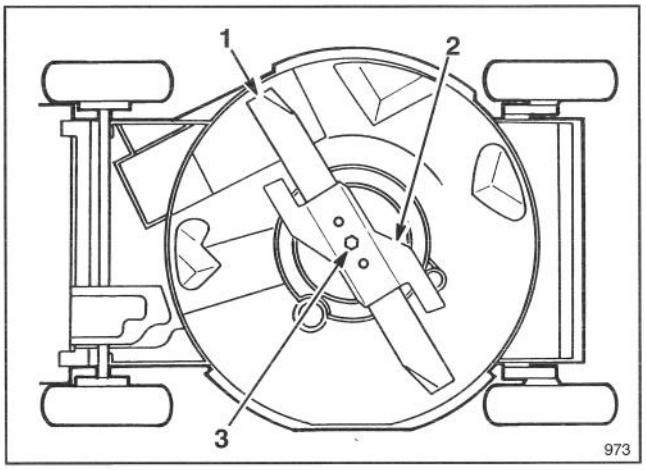

Figure 24

1. Blade **2. Accelerator** **3. Blade bolt**

7. INSPECTING BLADE—Carefully examine blade for sharpness and wear, especially where flat and curved parts meet (Fig. 25A). Since sand and abrasive material can wear away the metal that connects the flat and curved parts of the blade, check blade before using the mower. If a slot or wear is noticed (Fig. 25B & C), replace blade. Refer to step 8.

Note: For best performance, install new blade before cutting season begins. During the year, file down small nicks to maintain the cutting edge.

8. REMOVING BLADE—Grasp end of blade using a rag or thickly padded glove. Remove blade bolt, accelerator and blade (Fig. 24).

⚠ DANGER

- **A worn or damaged blade could break and a piece of blade could be thrown into operator's or bystander's area.**
- **A thrown piece of blade could cause serious personal injury or death to operator or bystanders.**
- **Inspect blade periodically for wear or damage.**
- **Replace a worn or damaged blade.**

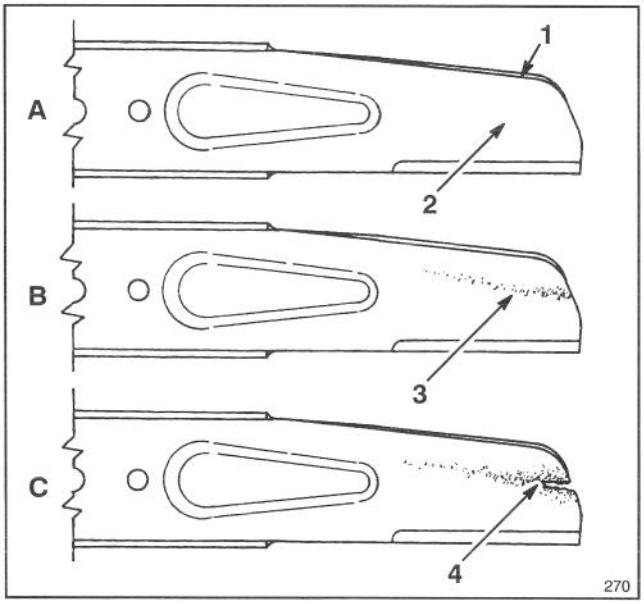

Figure 25

1. Sail **3. Wear**
2. Flat part of blade **4. Slot formed**

9. SHARPENING BLADE—Using a file, sharpen top side of blade and maintain original cutting angle (Fig. 26). The blade will remain balanced if same amount of material is removed from both cutting edges.

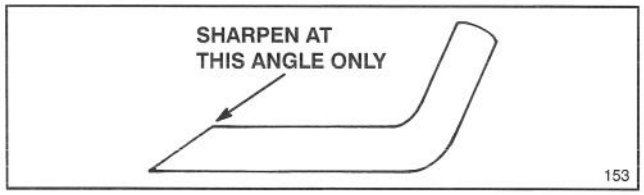

Figure 26

IMPORTANT: Check balance of blade by putting it on a blade balancer. An inexpensive balancer can be purchased at a hardware store. A balanced blade stays in a horizontal position and an unbalanced blade settles to the heavy side. If blade is not balanced, file more metal off cutting edge on heavy end of blade.

10. Install sharp, balanced TORO blade, accelerator and blade bolt. Sail part of blade must point toward top of mower housing to ensure correct installation. Tighten the blade bolt to 50 ft-lb (68 N·m).

11. Return mower to upright position.

12. Open vent screw on fuel tank cap, open fuel shut-off valve and reconnect spark plug wire.

LUBRICATION

After every 25 operating hours or when season ends, front and rear wheels must be lubricated.

1. Apply 2 or 3 drops of light oil on inside of front and outside of all wheel bolts. Spin wheels to distribute oil into bushings. Wipe up excess oil.

2. Move rear wheel height–of–cut levers to "C" setting. Wipe grease fittings with clean rag (Fig. 27). Install grease gun onto fitting and gently apply 2 or 3 pumps of #2 Multi–Purpose Lithium Base Grease. Excess pressure may damage seals.

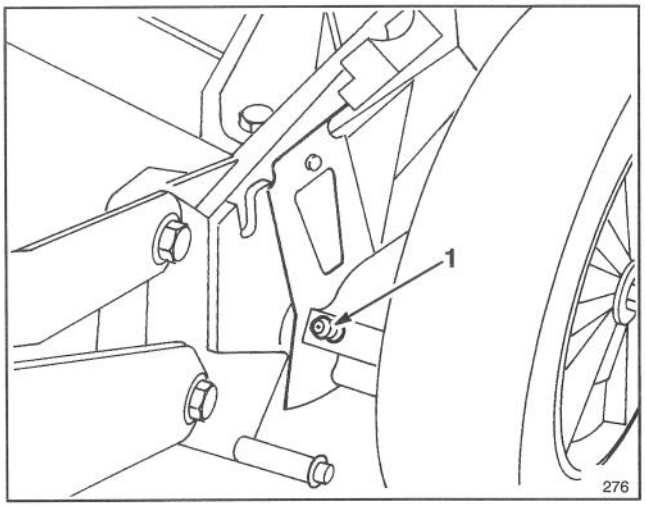

Figure 27

1. Grease fitting

CHARGING BATTERY (electric start model)

Although a new battery is not fully charged, a partial charge of 4 hours provides enough energy for several starts. However, a new battery must be charged for 72 continuous hours to ensure full charge. Also charge battery for 72 hours when mower is stored and in the spring. During normal operation, engine alternator keeps battery charged. If battery should run down, charge it for 48 hours.

1. Stop engine and disconnect wire harness from battery terminal (Fig. 28).

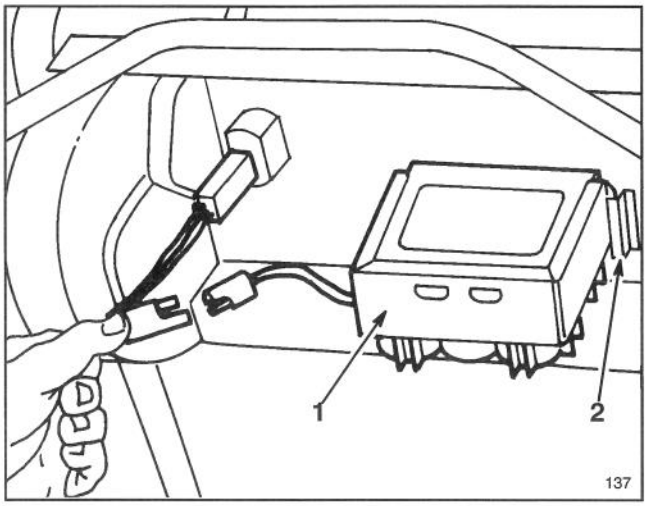

Figure 28

1. Battery **2. Mounting tab**

2. If desired, battery can be removed by sliding it out of mounting tabs. However, removal is not required if mower can be positioned near an electrical outlet.

3. Connect TORO electro charger to battery and plug into 220VAC power outlet. After charging battery for specified time, unplug charger and disconnect from battery.

4. Connect wiring harness to battery terminal.

IMPORTANT: Only the TORO electro charger is recommended because other chargers could damage the battery. Always use charger indoors and charge battery at room temperature (22° C or +70° F) whenever possible. Do not charge battery longer than 72 hours because damage could result.

CLEANING MOWER HOUSING, DISCHARGE TUNNEL, BELT COVER AND PLUG

To ensure best performance, the discharge tunnel plug must be cleaned after each use. When grass is thick and lush, clippings may collect on and around the plug; this may make plug removal difficult. After each use, remove plug from discharge tunnel and clean off all debris.

Keep underside of mower housing clean. Be especially careful to keep kickers on underside of mower housing free of debris (Fig. 29).

Always be sure that discharge tunnel door locks closed when handle is released. If debris prevents discharge door from locking closed, clean inside of discharge tunnel and door thoroughly.

1. Turn fuel shut-off valve (Fig. 7) to OFF position.

2. Turn vent screw on fuel tank cap (Fig. 6) clockwise to close.

3. Run engine until it dies. Try starting engine once more to make sure gas is out of carburetor.

4. Pull wire off spark plug. Remove key from switch on electric start model.

5. If grass bag is installed on mower, close door in mower housing and remove grass bag.

6. Tip mower on its left side (Fig. 29). Avoid rotating blade because starting problems may result.

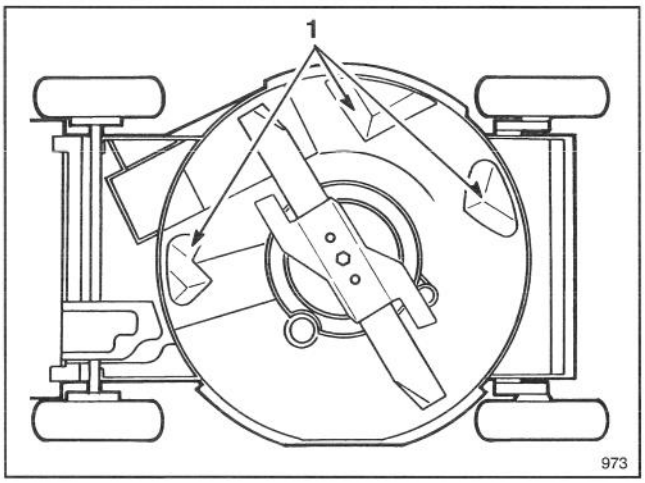

Figure 29

1. Kicker plates

7. Remove dirt and grass clippings that stick to housing with a hardwood scraper. Avoid burrs and sharp edges.

8. Turn mower upright.

9. Remove debris from inside of discharge tunnel.

10. Remove screws securing belt cover to mower housing (Fig. 30). Lift off cover and brush out all debris from belt area. Reinstall belt cover.

11. Clean discharge tunnel plug.

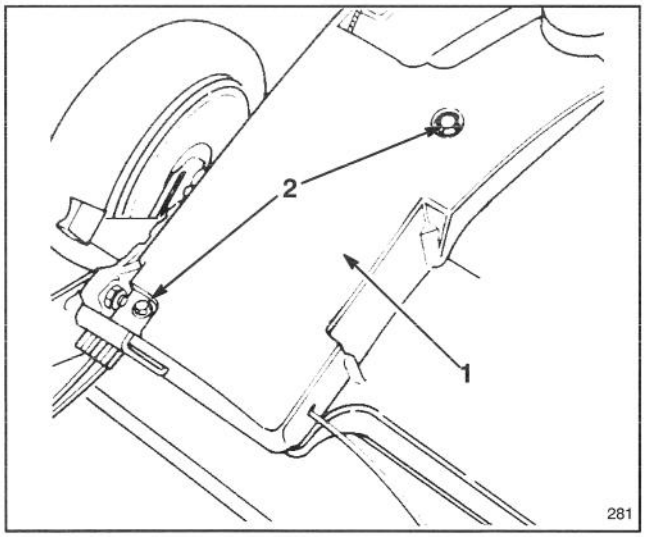

Figure 30

1. Belt cover **2. Screws**

12. Open vent screw on fuel tank cap, open fuel shut-off valve and reconnect spark plug wire.

PREPARING MOWER FOR STORAGE

1. For long term storage, either drain gasoline from fuel tank or add a fuel additive to the gasoline. To drain gasoline, refer to Draining Gasoline, page 12. After fuel is drained, start engine and let it idle until all fuel is consumed and engine stops. Repeat the starting procedure two more times to ensure all gas is removed from the engine. If gasoline is not drained and a fuel stabilizer is not added, gum–like varnish deposits will form and cause poor engine operation, even starting problems.

Fuel can be left in gas tank only if a fuel stabilizer is added to gasoline before storing. Toro does not recommend stabilizers with an alcohol base, such as ethanol, methanol or isopropyl. Use fuel stabilizer in recommended quantities as specified on container.

Under normal conditions, fuel additives remain effective in fuel for 6–8 months.

2. Drain oil: refer to Changing Crankcase Oil, page 12. After oil is drained, do not fill crankcase with oil until the following steps (3-10) are completed.

3. Remove spark plug and pour 2 tablespoons of SAE 30 oil into hole in cylinder. Pull starter rope slowly to coat inside of cylinder. Install spark plug and tighten to 14 ft–lb (19 N·m). **DO NOT INSTALL WIRE ON SPARK PLUG.**

4. Clean mower housing: refer to Cleaning Mower Housing, Discharge Tunnel, Belt Cover and Plug, page 15.

5. Check condition of blade: refer to Inspecting/Removing/Sharpening Blade, page 14.

6. Tighten all nuts, bolts, and screws.

7. Clean dirt and chaff from cylinder, cylinder head fins, and blower housing. Also remove grass clippings, dirt, and grime from external parts of the engine, shrouding, and top of mower housing.

8. Clean air cleaner: refer to Servicing Air Cleaner, page 11.

9. Lubricate the wheels: refer to Lubrication, page 15.

10. Touch up all rusted or chipped paint surfaces. Toro Re–Kote paint is available from an Authorized TORO Service Dealer.

11. Fill crankcase with oil; refer to Fill Crankcase With Oil, page 4.

12. Charge battery for 72 hours (electric start model); refer to Charging Battery, page 15.

13. Store mower in a clean, dry place. Cover mower to keep it clean and protected.

PRODUCT IDENTIFICATION

A model and a serial number decal is located on right side of mower housing ahead of discharge tunnel. Always refer to specific numbers on this decal in correspondence or when replacement parts are needed.

TORO SERVICE SUPPORT

If help - concerning safety, set–up, operation, maintenance, or troubleshooting - is ever needed, contact the local Authorized TORO Service Dealer or Distributor. Refer to the "Yellow Pages" for assistance. In addition to skilled service technicians, the dealer and distributor have factory approved accessories and replacement parts. Keep your Toro all TORO. Buy genuine TORO replacement parts and accessories.

OPTIONAL EQUIPMENT

For special conditions the following accessories may be purchased at your local authorized TORO Service Dealer.

1. **Side Discharge Kit, Model No. 59110**—Installs in seconds. Rear mounted in place of the grass bag. Disperses clippings while trimming on both sides (Fig. 31).

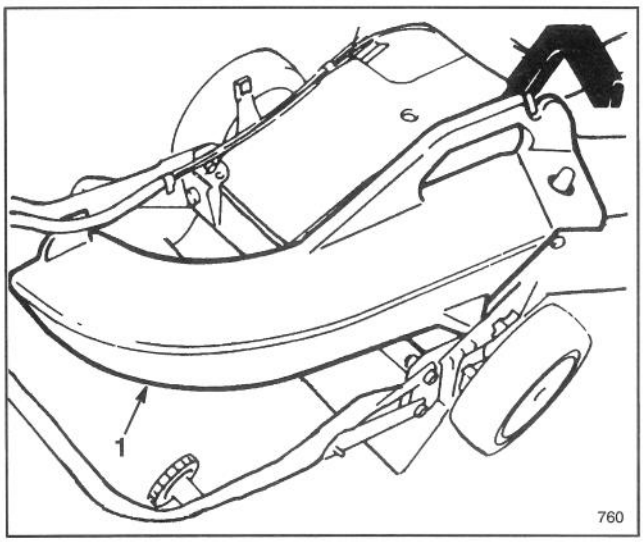

Figure 31

1. Side discharge chute

2. **Spark Arrestor, Part No. 77-9040**—If a spark arrestor is required because of local, state, or federal regulations, it may be purchased from an Authorized Toro Service Dealer. If mower is operated on any California, U.S.A., forest, brush, or grass covered land without a properly operating spark arrestor, the operator is violating state law, Section 4442 Public Resources Code.

3. **Dethatcher Kit, Model No. 59131**—Installs in minutes. Front mounted for easy maneuverability (Fig. 32). Spring tines loosen thatch for clean vacuuming into grass bag and convenient disposal.

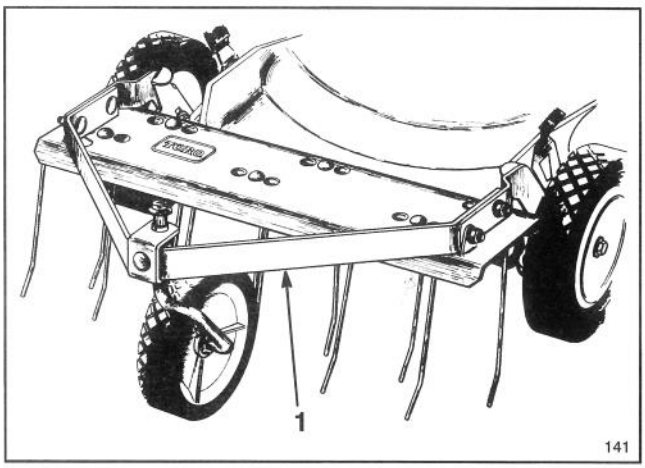

Figure 32

1. Dethatcher attachment

THE TORO STARTING GUARANTEE

A Five Year Limited Warranty
On The Toro GTS 150 OHV Engine

What Is Covered?

The Toro Company guarantees that your TORO GTS 150 Engine will start on the first or second pull for five years from the date of purchase—if you provide the routine maintenance it requires—or we will fix it. The cost of parts and labor are included, but you must pay transportation costs. This covers TORO GTS 150 engines purchased after September 1, 1991.

What Must You Do To Keep The Warranty In Effect?

You must maintain your TORO GTS 150 Engine by following the maintenance schedule detailed in the Operator's Manual, at your expense. You must record this work in the maintenance chart provided and keep your proof of purchase. You will also need to have your TORO GTS 150 engine serviced annually by an Authorized TORO Service Dealer.

How Do You Get Service?

If the starting performance of your TORO GTS 150 Engine should diminish to the point where it will not start in one or two pulls by a normal, able–bodied adult, you should follow the procedures below:

1. Contact any Authorized TORO Service Dealer or the TORO Distributor.
2. He will either instruct you to return the product to him or recommend another Authorized TORO Service outlet which might be more convenient.
3. Take the product, your maintenance records, and proof of purchase to the Service Dealer.

If, for any reason, you are dissatisfied with the Dealer's analysis of your engine's starting condition, or the assistance provided, please contact your TORO Distributor.

What Does This Warranty Not Cover?

This Warranty does not cover:

1. Any repairs on products used commercially.
2. Normal maintenance including replacement of spark plugs, air filter, fuel filter, and carburetor adjustments.
3. Oil change and lubrication.
4. Repairs or adjustments due to:
   a. Failure to follow proper maintenance procedures;
   b. Rotary mower blade striking an object;
   c. Contaminants in the fuel system;
   d. Improper fuel or fuel mixture (consult your Operator's Manual if in doubt);
   e. Failure to follow the proper storage procedures as specified in the Operator's Manual;
   f. Operation misuse, neglect or accidents;
   g. Repairs or attempted repairs by anyone other than an Authorized TORO Service Dealer.
5. Special operational conditions where starting may require more than two pulls, including:
   a. First time starts after extended period of non–use or seasonal storage;
   b. Cool temperature starts such as those found in early spring and late autumn may require an additional pull or two (applies to rotary products only);
   c. Improper starting procedures. If you are having difficulty starting your unit, please check the Operator's Manual to ensure you are using the correct starting procedures. This can save an unnecessary visit to a Service Dealer.

All warranty repairs reimbursable under this warranty must be performed by an Authorized TORO Service Dealer using Toro approved replacement parts.

The above remedy through repair by an Authorized TORO Service Dealer is the purchaser's sole remedy.