Form No. 3430-495 Rev B

TORO®

Count on it.

Parts Catalog

TRX-20

Trencher

Model No. 22973—Serial No. 404710000 and Up

Model No. 22973G—Serial No. 404710000 and Up

Register at www.Toro.com.
Original Instructions (EN)

CE

3430-495 B

Ordering Replacement Parts

To order replacement parts, please supply the part number, the quantity, and the description of each part desired.

Understanding Reference Numbers

Each identified part in an illustration has a reference number. The reference number for a part also appears in the parts list, along with other information about the part.

This catalog uses two special reference number formats, one to indicate parts in a service assembly and another to indicate the quantity of a given part in an illustration.

Service Assembly Reference Numbers

Parts in service assemblies have reference numbers in the form a:b. The a represents the reference number of the entire service assembly and the b represents a sequential number unique to each part within the service assembly.

For example, a wheel assembly might be identified by reference number 6, the tire by 6:1, the valve by 6:2, and the wheel by 6:3. When you order the assembly identified by reference number 6, you receive all parts identified by reference numbers 6:1,6:2, and 6:3. However, you may also order any part individually. Reference numbers of this type appear in illustration and in parts lists.

Reference Numbers Indicating Quantity

In an illustration, if a reference number indicates more than one part, the reference number has the form nX y. The n represents the quantity of the part, the X is the multiplication symbol, and the y represents the reference number.

For example, in an illustration, the reference number 2X 37 means that two of the parts identified by reference number 37 are indicated.

Contents

Main Frame Assembly 4
Tower and Fuel Tank Assembly 6
Track Drive Assembly 8
Hydraulic Pump Assembly No. 117-6410 10
Hydraulic Pump Assembly No. 117-6409 12
Hydraulic Motor Assembly No. 104-8470 14
Parking Brake Assembly 16
Engine Assembly 18
Gear Pump, Idler Arm and Pulley Assembly 20
Gear Pump Assembly No. 114-3072 22
Hydraulic Control Assembly 24
2-Spool Valve Assembly No. 115-4062 26
Hydraulic Cylinder Assembly No. 121-1955 28
Hydraulic Motor Assembly No. 131-0652 30
Hydraulic Oil Cooler Assembly 32
Trencher Head and Auger Assembly 34
Traction Control Assembly 36
Electrical Assembly 38
Cylinder and Crankcase Assembly 40
Piston and Crankshaft Assembly 41
Valve and Camshaft Assembly 42
Lubrication Equipment Assembly 43
Cooling Equipment Assembly 44
Electric Equipment Assembly 45
Control Equipment Assembly 46
Carburetor Assembly 47
Air Filter and Muffler Assembly 48
Fuel Pump and Filter Assembly 49
Starter Assembly 50
Label Set 51
Attachments and Accessories 52

© 2020—The Toro® Company
8111 Lyndale Avenue South
Bloomington, MN 55420

Contact us at www.Toro.com.
Printed in the USA.
All Rights Reserved

Main Frame Assembly

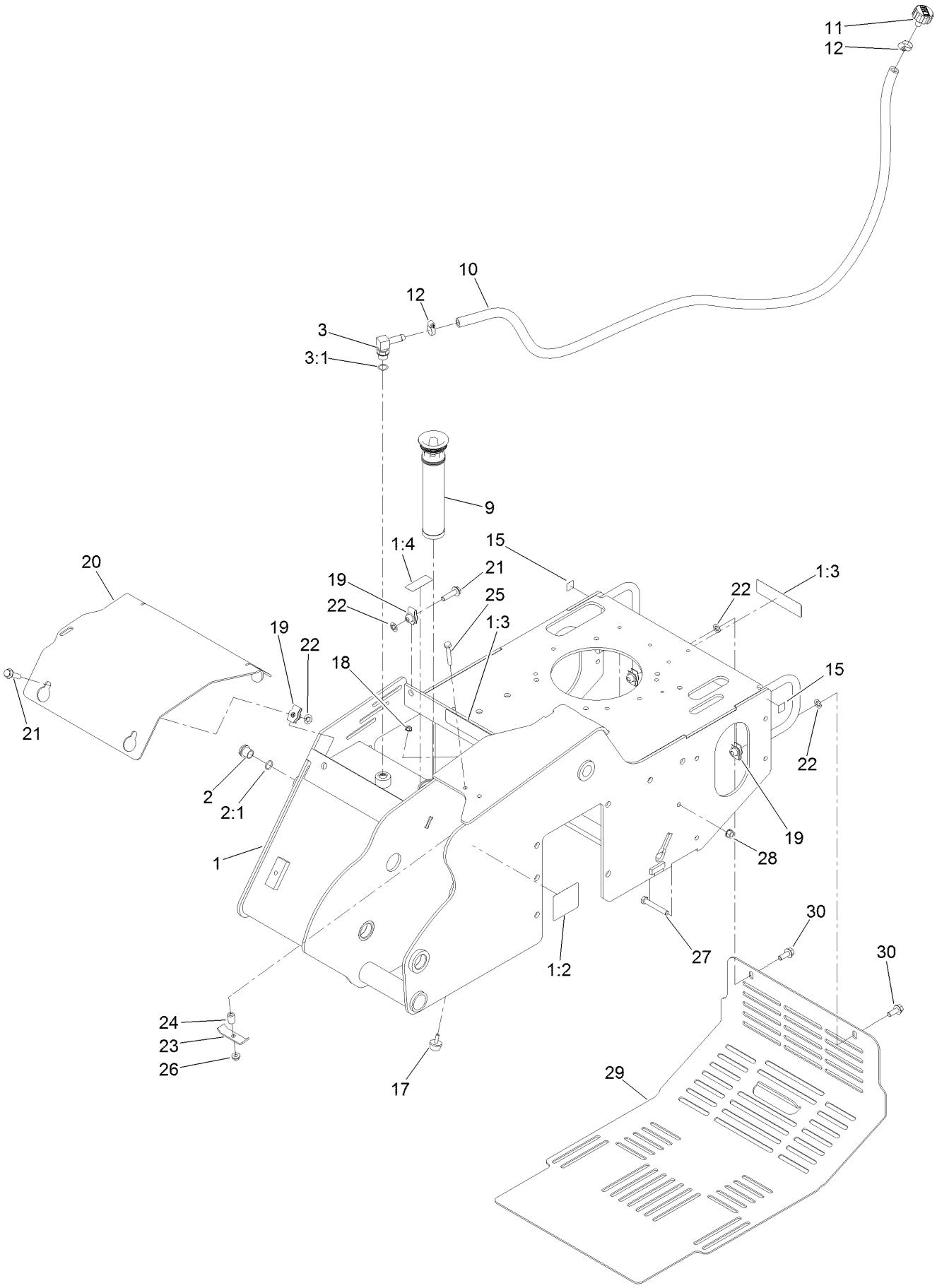

Main Frame Assembly (continued)

Ref.	Part Number	Qty.	Description
1	127-9602	1	Main Frame ASM
1:2	100-4650	1	Decal-Warning
1:3	93-7814	2	Decal-Danger
1:4	93-6686	1	Decal-Oil, HYD
2	114-3075	1	Sight Glass ASM
2:1	237-79	1	O-Ring
3	354-120	1	Fitting-Elbow, 90
3:1	237-79	1	O-Ring
9	114-3039	1	Filter-Tank, In
10	114-3042	1	Hose-Breather
11	68-6150	1	Breather
12	2412-36	2	Clamp-Hose
15	93-9084	2	Decal-Point, Lift
17	1-523420	1	Bumper

Ref.	Part Number	Qty.	Description
18	32128-33	1	Nut-HF
19	105-4886	5	Nut-Tinnerman
20	119-4566-03	1	Plate-Cover, Front
21	3234-18	3	Screw-HHF
22	107-3154	5	Nut-Push
23	100-4860	1	Bracket-Clamp
24	93-5023	1	Spacer
25	322-10	1	Screw-HH
26	32128-20	1	Nut-HF
27	323-12	1	Screw-HH
28	32128-40	2	Nut-Flange
29	115-6503-01	1	Cover-Rear
30	3234-11	2	Screw-HHF

Tower and Fuel Tank Assembly

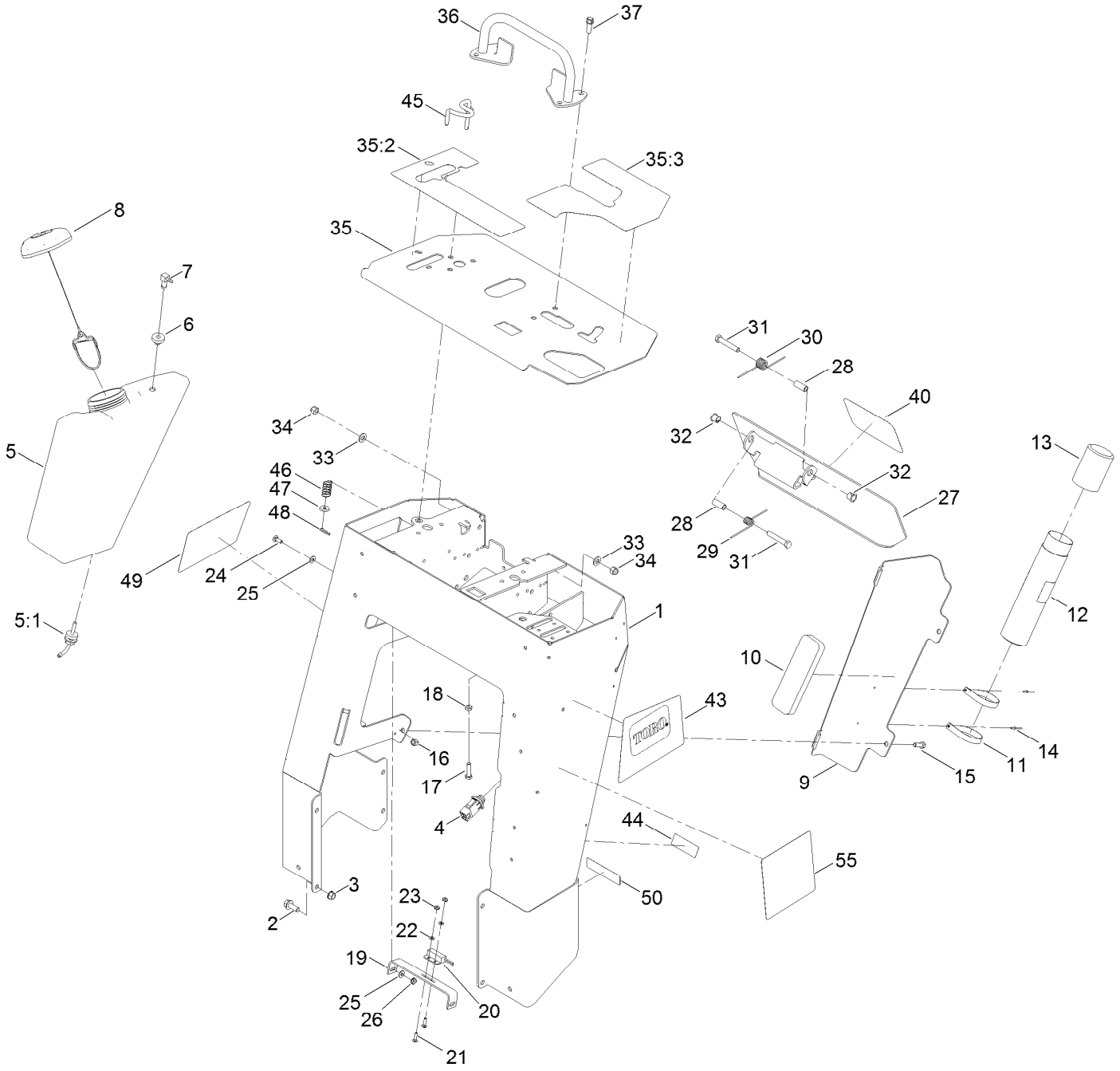

Tower and Fuel Tank Assembly (continued)

Ref.	Part Number	Qty.	Description
1	117-6419-01	1	Tower
2	3234-11	8	Screw-HHF
3	32128-40	8	Nut-Flange
4	100-1268	1	Switch-Plunger
5	120-7357	1	Tank-Fuel
5:1	103-2605	1	Fitting-Fuel, Bulkhead
6	46-6560	1	Bushing
7	104-5228	1	Fitting-Elbow, 90 DEG
8	137-4119	1	Cap-Fuel, Ratcheting
9	114-3065-01	1	Bracket-Cover, Tank
10	107-7507	1	Pad-Foam
11	2412-120	2	Clamp-R
12	104-7050	1	Tube-Manual
13	104-7048	1	Cap-Housing
14	3269-17	2	Rivet-Pop
15	322-5	2	Screw-HH
16	3296-29	2	Nut-Lock, NI
17	3210-7	1	Screw-HH
18	3220-2	1	Nut-Jam
19	100-1263	1	Plate-Switch
20	100-1270	1	Switch-Proximity
21	3229-20	2	Screw-CARR
22	3256-51	2	Washer-Flat
23	32149-7	2	Nut-Keps
24	3229-1	2	Screw-CARR
25	3256-22	4	Washer-Flat
26	32149-2	2	Nut-Keps
27	114-3012-03	1	Plate-Reverse
28	114-1337	2	Spacer-Spring
29	98-8425	1	Spring-Torsion, LH
30	98-8424	1	Spring-Torsion, RH
31	323-11	2	Screw-HH
32	256-257	2	Bushing-Nyliner
33	3256-24	2	Washer-Flat
34	3296-39	2	Nut-Lock, NI
35	117-6389	1	Panel-Control
35:2	115-1231	1	Decal-Console, RH
35:3	115-1230	1	Decal-Console, LH
36	106-7715	1	Bar-Reference
37	95-1726	4	Screw-Taptite
40	105-1217	1	Decal
43	117-6282	1	Decal-Side, LH
44	120-7532	1	Decal-Info
45	114-8727	1	Rod-Interlock
46	85-6750	1	Spring-Control
47	88-7200	1	Washer-Flat
48	3290-307	1	Pin-Cotter
49	117-6271	1	Decal-Side, RH
50	133-8062	1	Decal-Arrestor, Spark
55	137-3873	1	Decal-Service

Track Drive Assembly

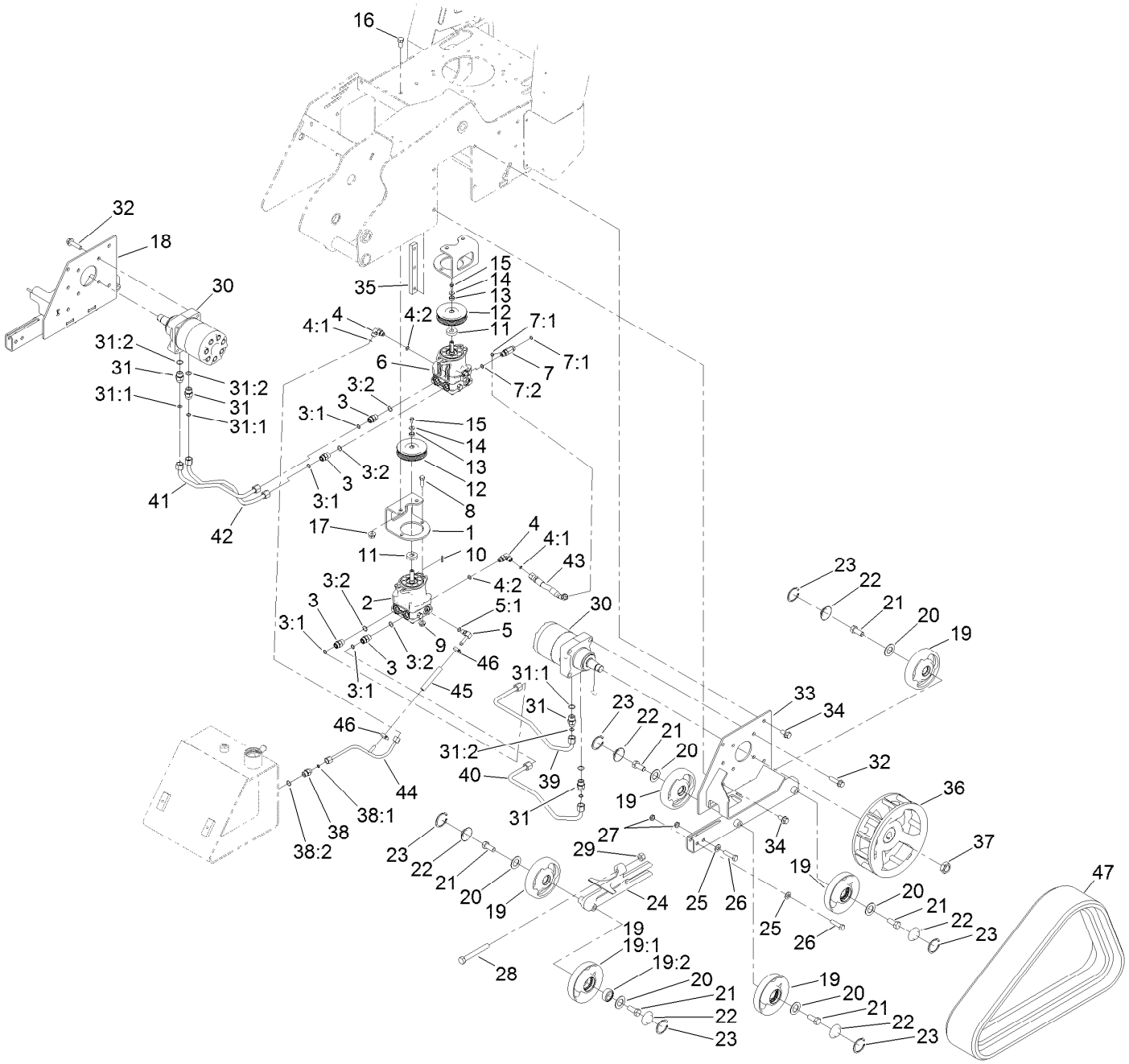

Track Drive Assembly (continued)

Ref.	Part Number	Qty.	Description
1	115-1289-03	2	Bracket-Mount, Pump
2	117-6409	1	RH HYD Pump ASM
3	340-4	4	Fitting-Straight
3:1	237-30	1	O-Ring
3:2	237-79	1	O-Ring
4	340-77	2	Fitting-Elbow, 90 DEG
4:1	237-22	1	O-Ring
4:2	237-42	1	O-Ring
5	100-4887	1	Fitting-Elbow, 90
5:1	237-42	1	O-Ring
6	117-6410	1	LH HYD Pump ASM
7	340-86	1	Fitting-Tee
7:1	237-22	2	O-Ring
7:2	237-42	1	O-Ring
8	324-5	4	Screw-HH
9	32128-42	4	Nut-HF
10	80-6090	2	Key-Pump
11	115-4002	2	Spacer
12	115-1298	2	Sheave
13	108-4211	2	Bushing
14	73-3580	2	Washer
15	33103-016	2	Screw-HHF
16	325-4	4	Screw-HH
17	32128-49	8	Nut-HHF
18	114-2993-03	1	Frame-Track, RH
19	112-4817	12	Wheel-Tensioner
19:1	114-3014-03	1	Wheel-Track
19:2	120-5378	1	Bearing-Ball
20	106-7585	12	Gasket-Bogie
21	327-4	12	Screw-HH

Ref.	Part Number	Qty.	Description
22	106-7557	12	Cap-Wheel, Bearing
23	106-7595	12	Ring-Snap, Internal
24	114-3077-03	2	Tensioner-Track
25	3256-26	4	Washer-Flat
26	325-8	4	Screw-HH
27	3296-45	4	Nut-Hex
28	112-4874	2	Screw-HH, TAP
29	3217-11	2	Nut-Hex
30	104-8470	2	HYD Wheel Motor ASM
31	340-6	4	Fitting-Straight
31:1	237-30	1	O-Ring
31:2	237-80	1	O-Ring
32	3234-27	8	Screw-HHF
33	114-2992-03	1	Frame-Track, LH
34	3234-6	10	Screw-HHF
35	114-3091	2	Bar-Thread
36	117-6426-03	2	Wheel-Drive
37	106-8159	2	Nut-Lock
38	340-3	1	Fitting-Straight
38:1	237-22	1	O-Ring
38:2	237-79	1	O-Ring
39	115-1285	1	Tube-HYD
40	115-1286	1	Tube-HYD
41	115-1287	1	Tube-HYD
42	115-1288	1	Tube-HYD
43	115-1297	1	Hose-HYD
44	117-1305	1	Tube-HYD
45	115-4083	1	Hose
46	2412-36	2	Clamp-Hose
47	112-4816	2	Track-Rubber

Hydraulic Pump Assembly No. 117-6410

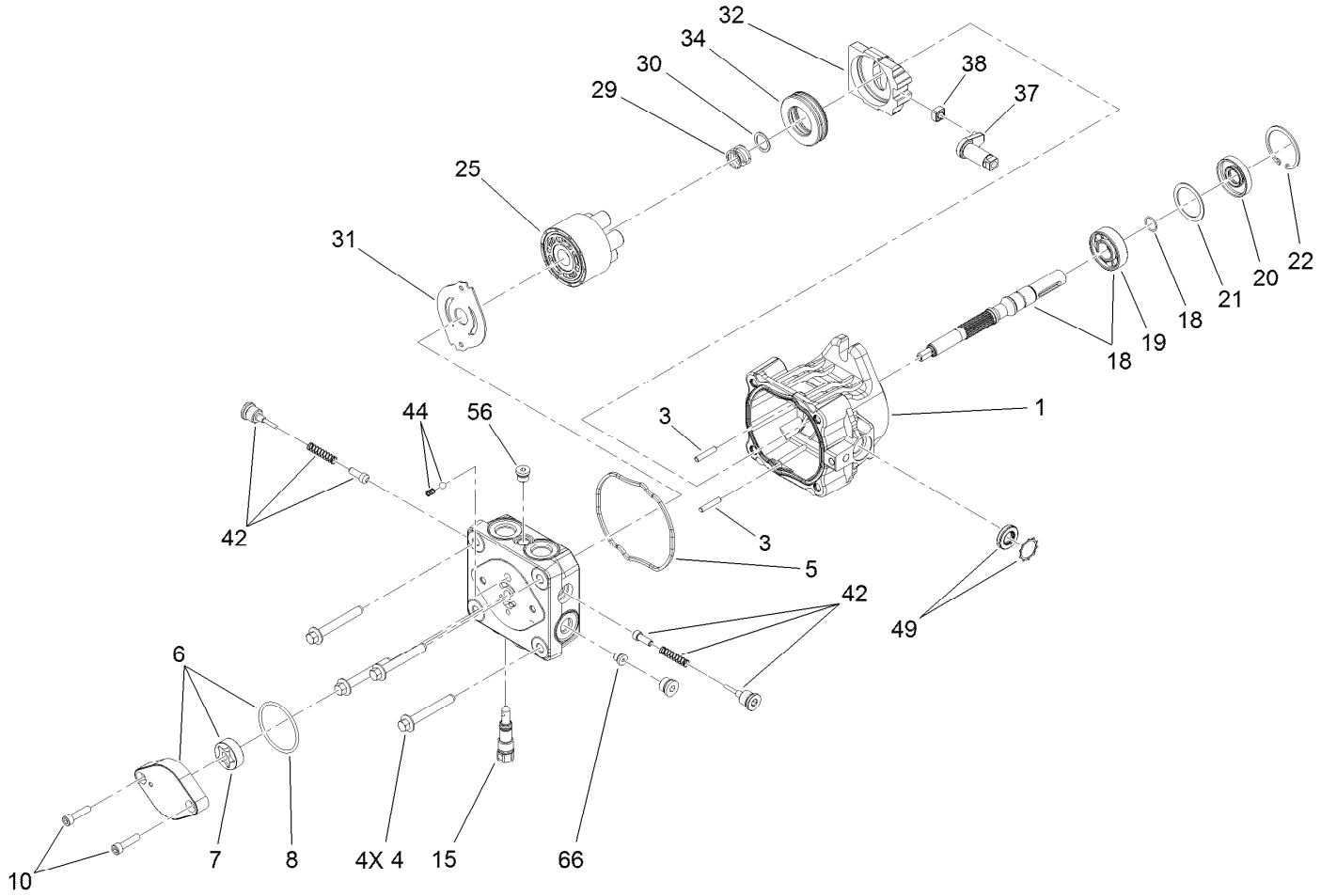

Hydraulic Pump Assembly No. 117-6410 (continued)

Ref.	Part Number	Qty.	Description
1	115-4464	1	Housing Kit
3	106-8753	2	Pin-Headless, Straight
4	106-8754	4	Bolt-HF
5	106-8755	1	O-Ring
6	106-8756	1	Charge Pump Kit
7	104-2122	1	Gerotor ASM
8	106-8757	1	O-Ring
10	104-2111	2	Capscrew
15	106-8759	1	Bypass Valve Kit
18	103-2664	1	Input Shaft Kit
19	104-5311	1	Bearing-Ball
20	104-5310	1	Seal-Lip
21	104-5308	1	Spacer
22	104-5309	1	Ring-Retaining
25	103-2666	1	Cylinder Block Kit

Ref.	Part Number	Qty.	Description
29	94-1936	1	Spring-Block
30	94-1937	1	Washer-Thrust
31	105-6185	1	Plate-Valve
32	94-1907	1	Swashplate-Variable
34	94-6922	1	Bearing-Thrust
37	115-4458	1	Arm-Trunnion, Tapered Square
38	94-1910	1	Guide-Slot
42	98-3252	2	Valve-Check (W/Poppet)
44	106-8760	1	Charge Relief Valve Kit
49	114-8155	1	Trunnion Seal Kit
56	106-8762	1	Plug-HSH
66	106-8763	1	Plug-HSH
99	105-6184	1	Seal Overhaul Kit ●

● Not illustrated

Hydraulic Pump Assembly No. 117-6409

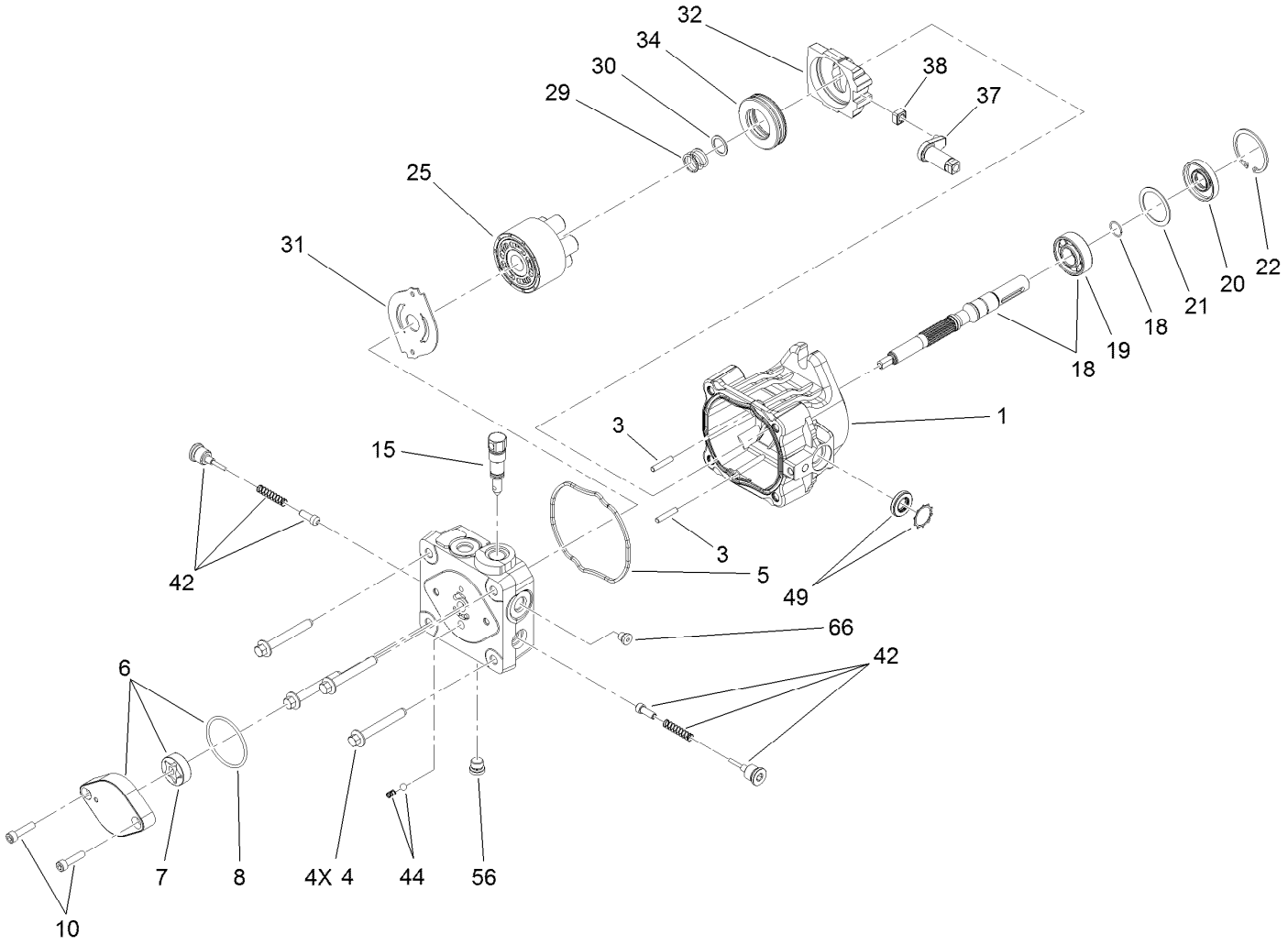

Hydraulic Pump Assembly No. 117-6409 (continued)

Ref.	Part Number	Qty.	Description
1	115-4464	1	Housing Kit
3	106-8753	2	Pin-Headless, Straight
4	106-8754	4	Bolt-HF
5	106-8755	1	O-Ring
6	106-8756	1	Charge Pump Kit
7	104-2122	1	Gerotor ASM
8	106-8757	1	O-Ring
10	104-2111	2	Capscrew
15	106-8759	1	Bypass Valve Kit
18	103-2664	1	Input Shaft Kit
19	104-5311	1	Bearing-Ball
20	104-5310	1	Seal-Lip
21	104-5308	1	Spacer
22	104-5309	1	Ring-Retaining
25	103-2666	1	Cylinder Block Kit

Ref.	Part Number	Qty.	Description
29	94-1936	1	Spring-Block
30	94-1937	1	Washer-Thrust
31	105-6185	1	Plate-Valve
32	94-1907	1	Swashplate-Variable
34	94-6922	1	Bearing-Thrust
37	115-4458	1	Arm-Trunnion, Tapered Square
38	94-1910	1	Guide-Slot
42	98-3252	2	Valve-Check (W/Poppet)
44	106-8760	1	Charge Relief Valve Kit
49	114-8155	1	Trunnion Seal Kit
56	106-8762	1	Plug-HSH
66	106-8763	1	Plug-HSH
99	105-6184	1	Seal Overhaul Kit ●

● Not illustrated

Hydraulic Motor Assembly No. 104-8470

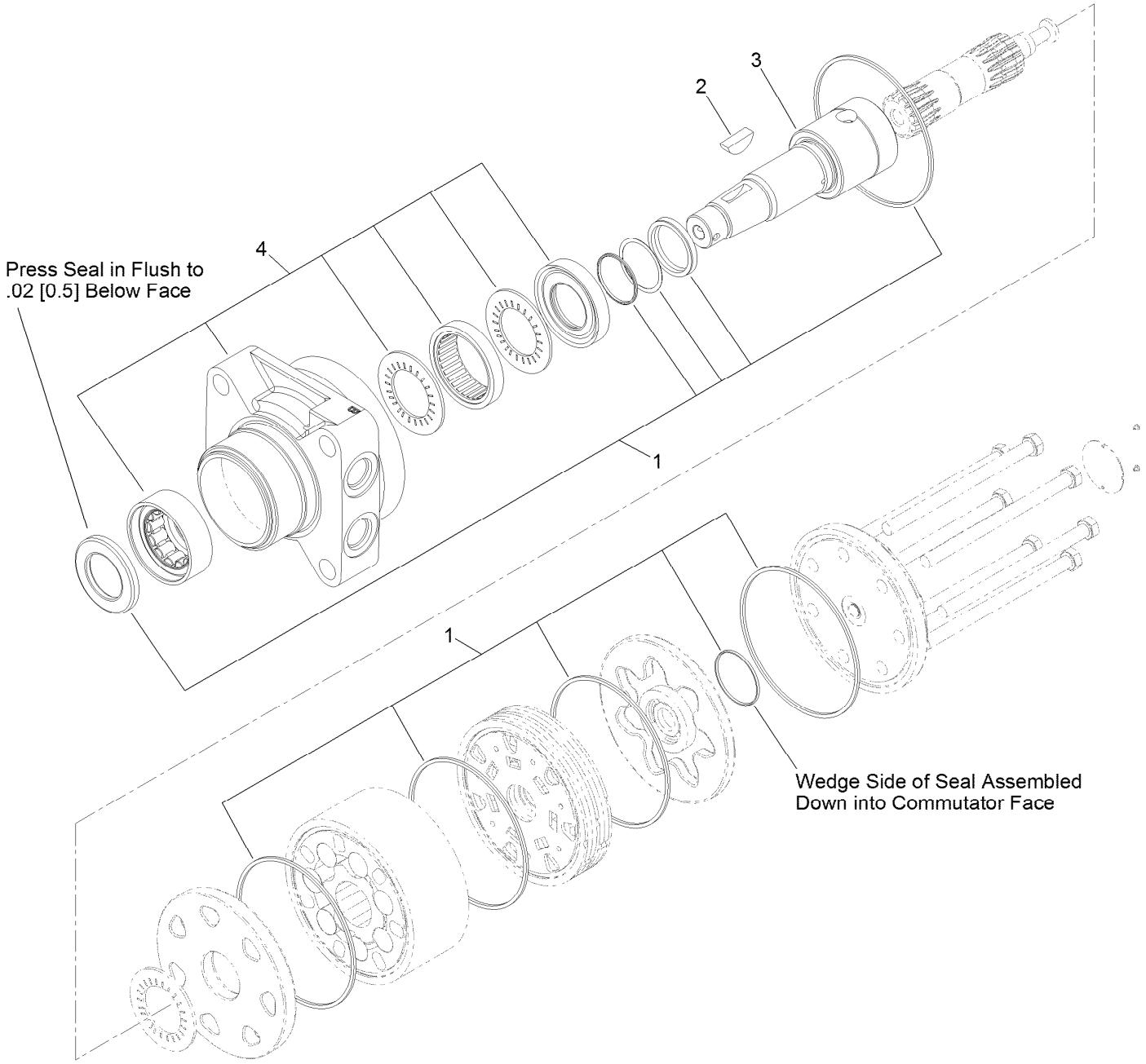

Hydraulic Motor Assembly No. 104-8470 (continued)

Ref.	Part Number	Qty.	Description
1	115-4061	1	Seal Kit
2	3257-42	1	Key-Woodruff
3	99-3090	1	Shaft-Coupling
4	120-5395	1	Motor Housing ASM

Parking Brake Assembly

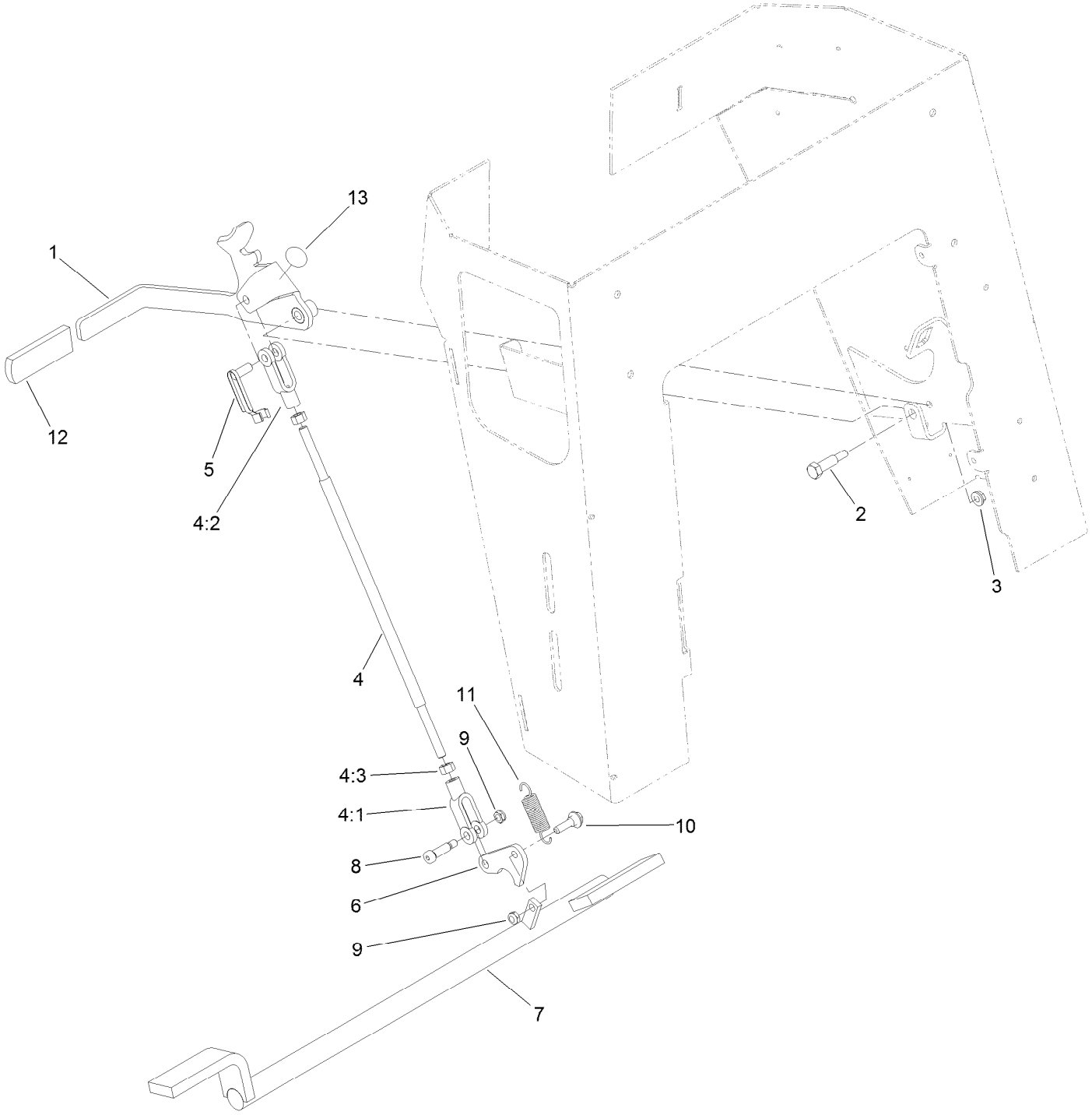

Parking Brake Assembly (continued)

Ref.	Part Number	Qty.	Description
1	117-6421-03	1	Handle-Brake
2	7-0030	1	Screw-Shoulder, HH
3	32128-20	1	Nut-HF
4	103-4335	1	Brake Rod ASM
4:1	1-633131	2	Yoke-Linkage, Brake
4:2	103-3907	1	Linkage-Handle, Brake
4:3	3219-3	2	Nut-Hex
5	103-2399	1	Pin-Spring, Clevis

Ref.	Part Number	Qty.	Description
6	114-2975	1	Link-Mounting
7	114-2972-03	1	Bar-Brake
8	114-8629	1	Bolt-Shoulder
9	3296-47	2	Nut-Lock, NI
10	27-7211	1	Screw-Shoulder
11	67-1450	1	Spring-Idler
12	62-9130	1	Grip-Handle
13	107-8495	1	Decal-Brake, Parking

Engine Assembly

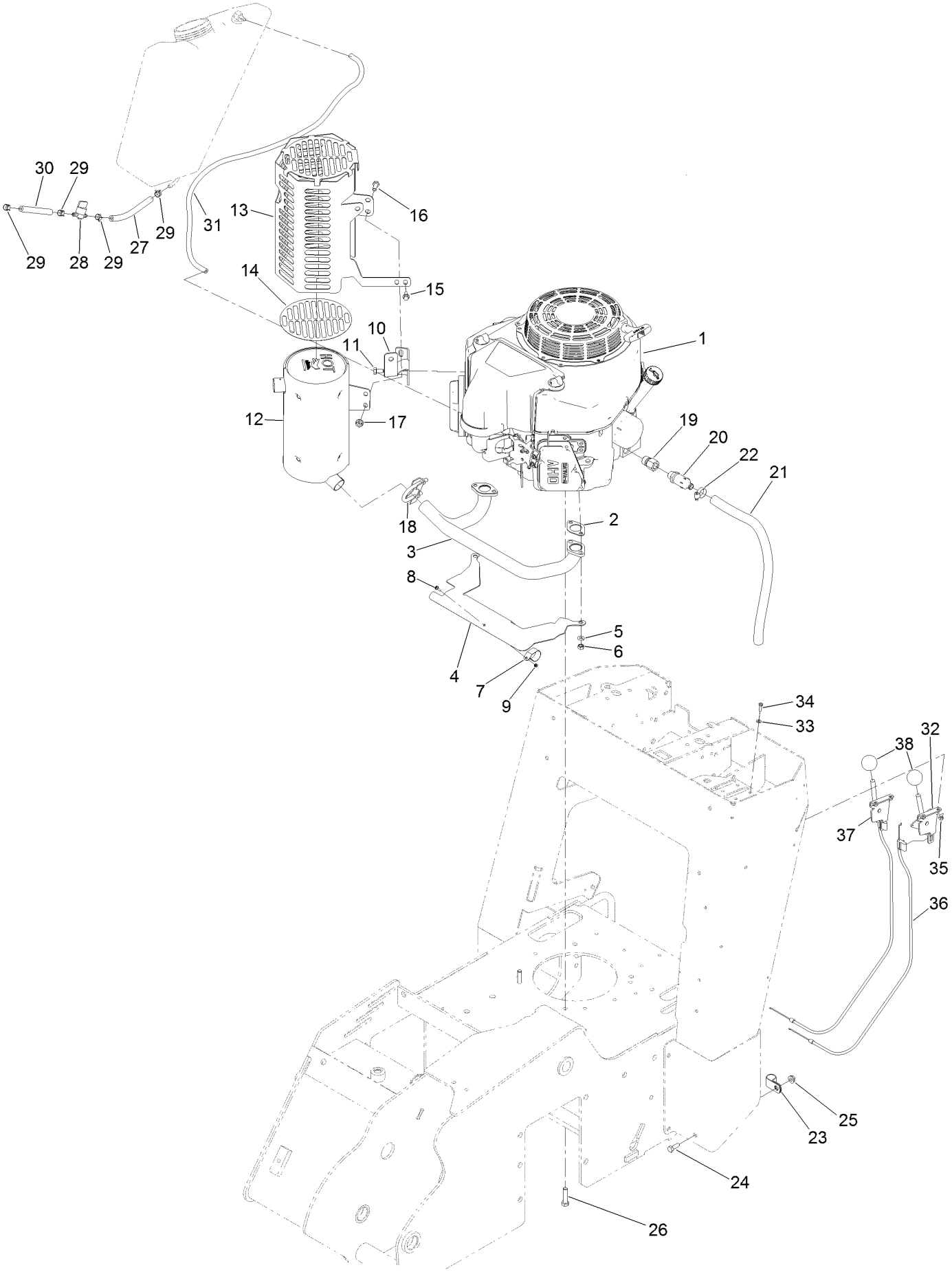

Engine Assembly (continued)

Ref.	Part Number	Qty.	Description
1	117-6449	1	Engine-Kawasaki, Fs600V
2	1-653313	2	Gasket-Exhaust
3	120-7537	1	Manifold-Muffler
4	131-0662	1	Plate-Shield, Heat
5	115-6496	4	Washer-Spring
6	115-6611	4	Nut-Hex
7	115-6488	1	Clamp
8	115-6494	1	Screw-Pan
9	115-6495	1	Nut-Hex
10	131-0670-03	1	Bracket-Guard, Muffler
11	33114-016	2	Screw-HH
12	120-7536	1	Muffler
13	137-4879-03	1	Guard-Muffler
14	131-0604	1	Guard-Foil
15	33103-016	1	Screw-HHF
16	33114-020	3	Screw-HH
17	112-2844	3	Nut-HF
18	2112-11	1	Clamp-Muffler
19	103-1966	1	Adapter-STR

Ref.	Part Number	Qty.	Description
20	92-6877	1	Valve-Drain, Oil
21	106-5709	1	Hose-Vent
22	2412-36	1	Clamp-Hose
23	2412-81	1	Clamp-R
24	322-4	1	Screw-HH
25	32128-20	1	Nut-HF
26	323-8	2	Screw-HH
27	109-0306	1	Hose-Fuel
28	1-603770	1	Valve-Fuel
29	2412-98	4	Clamp-Hose
30	109-0295	1	Hose-Fuel
31	117-6396	1	Hose-Vent, Tank
32	110-5547	1	Lever-Control
33	3256-21	4	Washer-Flat
34	3290-134	4	Screw
35	3296-2	4	Nut-Lock, NI
36	115-1211	2	Cable-Control
37	108-9730	1	Lever-Control
38	233-42	2	Knob

Gear Pump, Idler Arm and Pulley Assembly

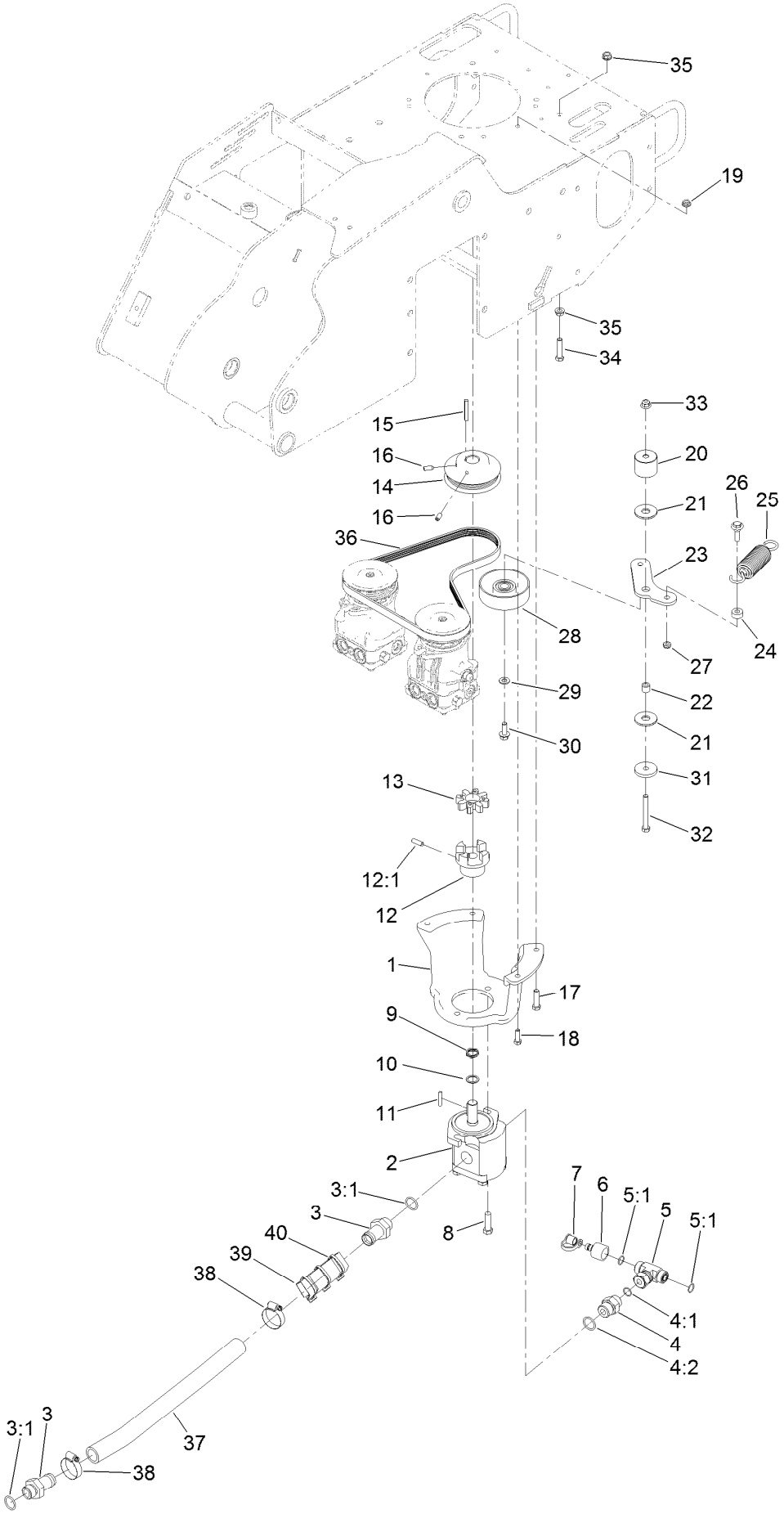

Gear Pump, Idler Arm and Pulley Assembly (continued)

Ref.	Part Number	Qty.	Description
1	115-1480-03	1	Mount-Pump
2	114-3072	1	Gear Pump ASM
3	99-3017	2	Fitting
3:1	237-81	1	O-Ring
4	340-8	1	Fitting-Straight
4:1	237-65	1	O-Ring
4:2	237-81	1	O-Ring
5	340-167	1	Fitting-Tee
5:1	237-65	2	O-Ring
6	86-5860	1	Nipple
7	354-79	1	Cap-Dust
8	324-6	2	Screw-HH
9	121-4517	1	Washer-Wave
10	115-7210	1	Washer-Thrust
11	27-8590	1	Key-Square
12	114-2933	1	Coupler-Flex
12:1	100-7594	1	Screw-Set
13	93-8827	1	Coupler-Spider
14	114-8559-03	1	Pulley-Engine
15	608006	1	Key-Square
16	3246-6	2	Screw-Set, HSH
17	323-8	2	Screw-HH
18	322-5	2	Screw-HH
19	32128-20	2	Nut-HF
20	125-0251	1	Spacer-Idler
21	114-0463	2	Washer-Friction, Composite
22	1-413088	1	Bushing-Lever, Lift
23	125-0252	1	Arm-Idler
24	104-8426	1	Spacer
25	121-4523	1	Spring-Extension
26	614672	1	Screw-Shoulder, HWH
27	3296-59	1	Nut-Lock, NI
28	95-8802	1	Pulley-Idler
29	3256-24	1	Washer-Flat
30	3234-11	1	Screw-HHF
31	110-9981	1	Washer-Plain
32	323-14	1	Screw-HH
33	104-8301	1	Nut-HF, NI
34	323-9	1	Screw-HH
35	3290-357	2	Nut-HHF, Whiz
36	114-2991	1	Belt-V
37	114-2917	1	Hose-Suction
38	2412-111	2	Clamp
39	AU112950	2	Protector-Hose
40	3290-378	3	Tie-Cable

Gear Pump Assembly No. 114-3072

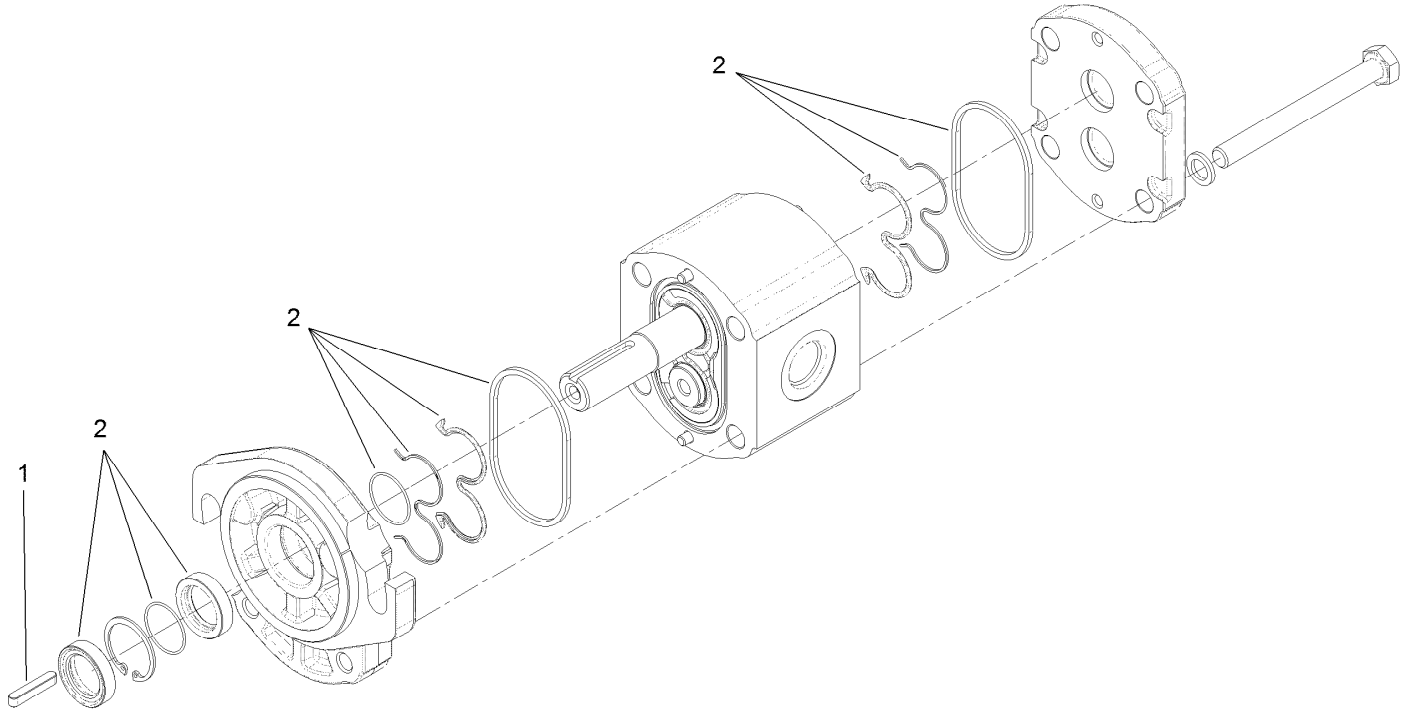

Gear Pump Assembly No. 114-3072 (continued)

Ref.	*Part Number*	*Qty.*	*Description*
1	104-5839	1	Key-Square
2	115-1265	1	Seal Kit

Hydraulic Control Assembly

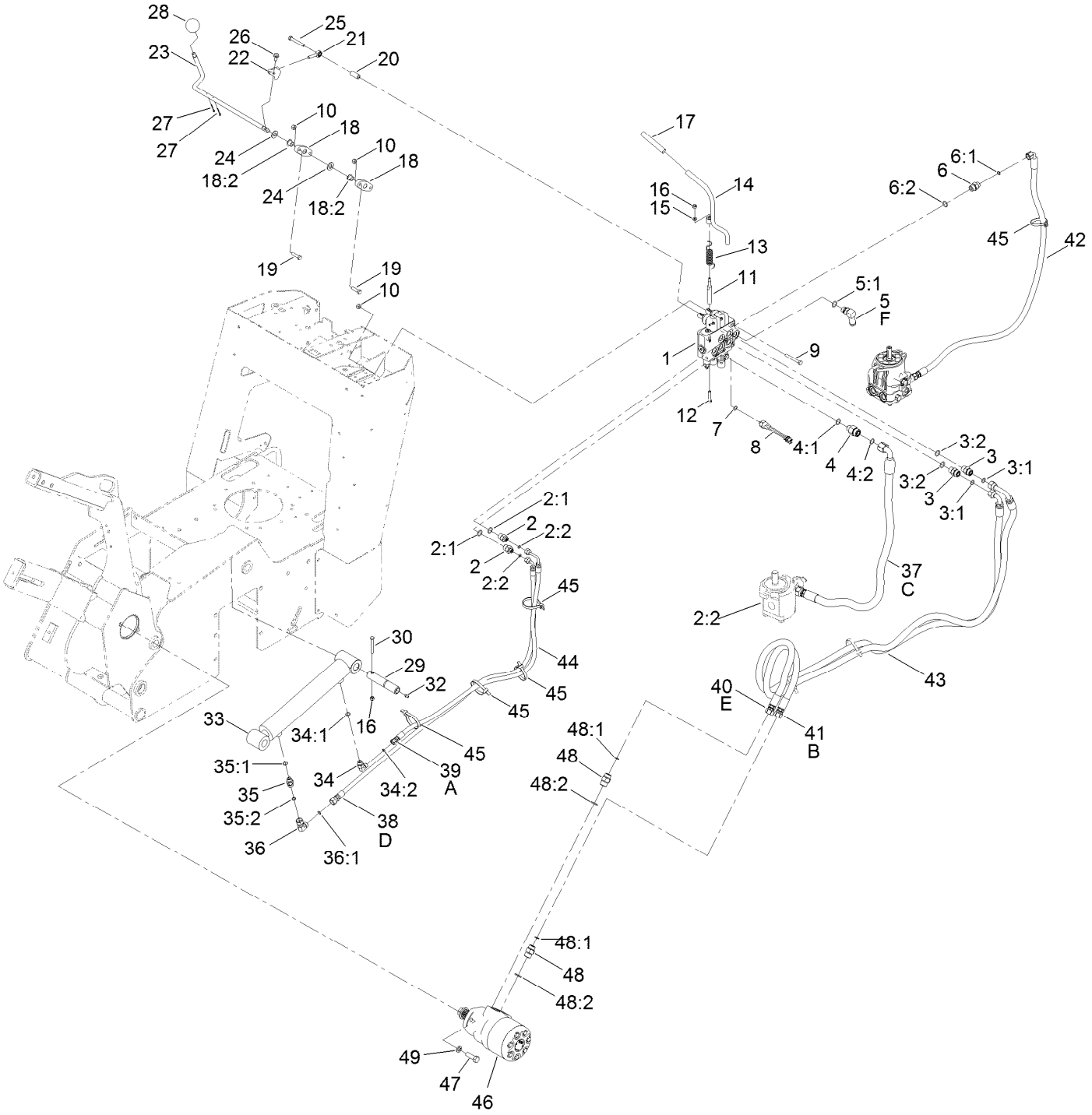

Hydraulic Control Assembly (continued)

Ref.	Part Number	Qty.	Description
1	115-4062	1	HYD Valve ASM
2	340-133	2	Fitting-STR
2:1	237-79	1	O-Ring
2:2	237-21	1	O-Ring
3	340-4	2	Fitting-Straight
3:1	237-30	1	O-Ring
3:2	237-79	1	O-Ring
4	340-155	1	Fitting-Straight
4:1	237-79	1	O-Ring
4:2	237-151	1	O-Ring
5	353-954	1	Fitting-Elbow, 90
5:1	237-79	1	O-Ring
6	340-3	1	Fitting-Straight
6:1	237-22	1	O-Ring
6:2	237-79	1	O-Ring
7	237-42	1	O-Ring
8	72-4310	1	Switch-Ball
9	322-12	3	Screw-HH
10	3296-29	7	Nut-Lock, NI
11	104-2827	1	Spacer-Hiflo
12	33114-035	1	Screw-HH
13	112-2738	1	Spring-Torsion
14	112-2739	1	Lever-Auxiliary
15	3256-16	1	Washer-Flat
16	3296-42	2	Nut-Lock, NI
17	112-2605	1	Grip-Rubber
18	138-3142	2	Bushing ASM
18:2	125-5239	1	Bushing-Flange
19	322-6	4	Screw-HH
20	103-0384	1	Spacer
21	115-1273	1	Bearing-Rod End
22	112-7210	1	Bracket-Control
23	114-8598	1	Rod-Lever, Cylinder
24	3256-26	2	Washer-Flat
25	33114-060	1	Screw-HH
26	3234-14	1	Screw-HHF
27	3272-7	2	Pin-Cotter
28	233-21	1	Knob
29	120-7352	1	Pin-Pivot
30	321-18	1	Screw-HH
32	302-5	1	Fitting-Grease
33	121-1955	1	HYD Cylinder ASM
34	340-82	1	Fitting-Elbow, 90 DEG
34:1	237-42	1	O-Ring
34:2	237-21	1	O-Ring
35	115-4081	1	Valve-Check
35:1	237-42	1	O-Ring
35:2	237-22	1	O-Ring
36	340-159	1	Elbow-90
36:1	237-22	2	O-Ring
37	114-3043	1	Hose-HYD
38	114-3044	1	Hose-HYD
39	114-3045	1	Hose-HYD
40	114-3046	1	Hose-HYD
41	114-3085	1	Hose-HYD
42	117-4038	1	Hose-HYD
43	99-5648	2	Sleeve-Protective
44	115-4064	1	Sleeve-Protective
45	3334-945	8	Tie-Cable
46	131-0652	1	HYD Motor ASM
47	325-6	2	Screw-HH
48	340-6	2	Fitting-Straight
48:1	237-30	1	O-Ring
48:2	237-80	1	O-Ring
49	3253-7	2	Washer-Lock

2-Spool Valve Assembly No. 115-4062

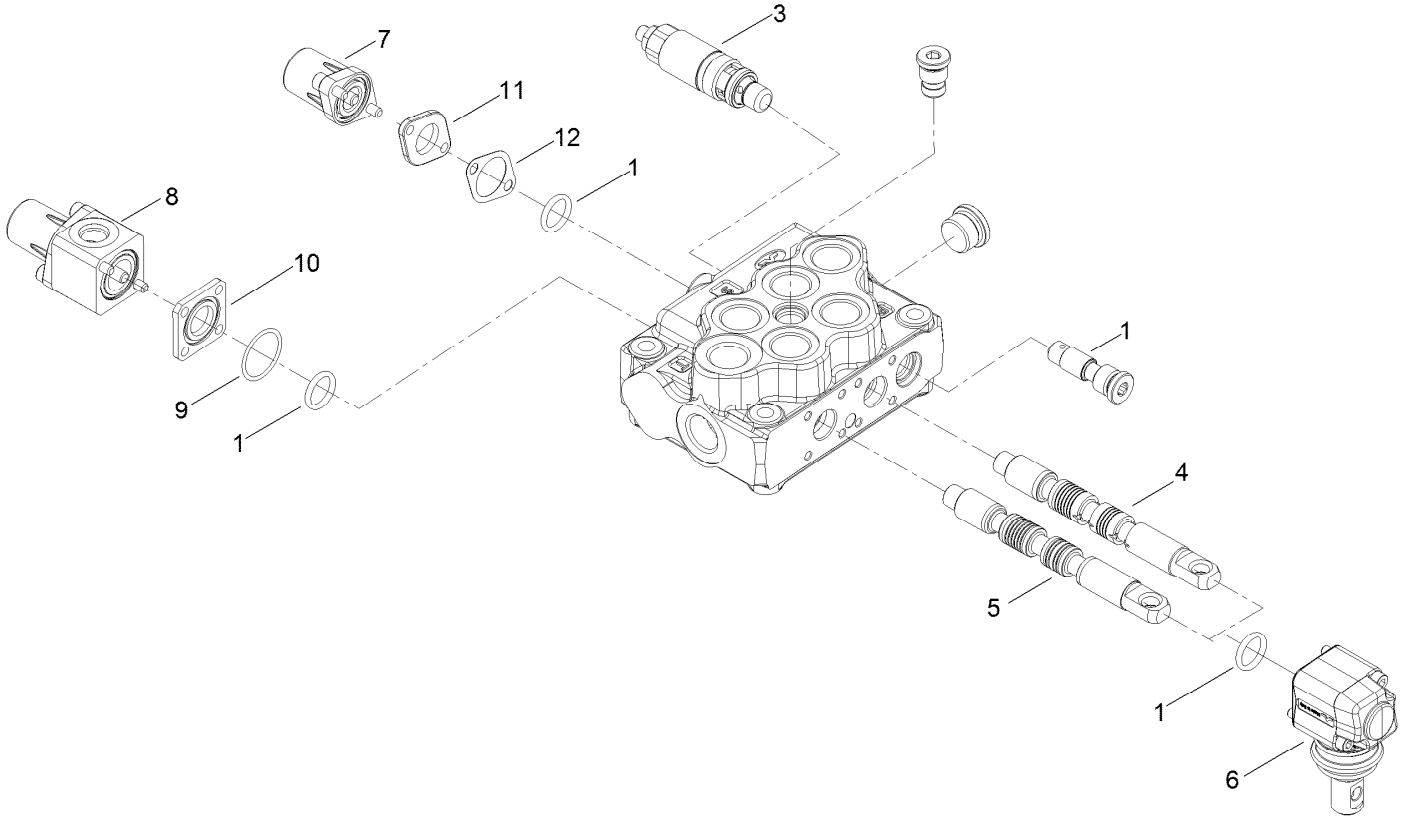

2-Spool Valve Assembly No. 115-4062 (continued)

Ref.	Part Number	Qty.	Description
1	106-7719	4	Seal-Valve
3	100-8805	1	Valve-Relief
4	115-4084	1	Spool-Valve
5	106-7572	1	Spool
6	100-7229	2	Lever Kit
7	115-4092	1	Spring Return Kit
8	115-4093	1	Switch Spring Return Kit
9	115-4097	1	Seal-Return
10	115-4094	1	Spacer-Square
11	115-4089	1	Spacer-Spring Return
12	115-4088	1	Gasket-Return

Hydraulic Cylinder Assembly No. 121-1955

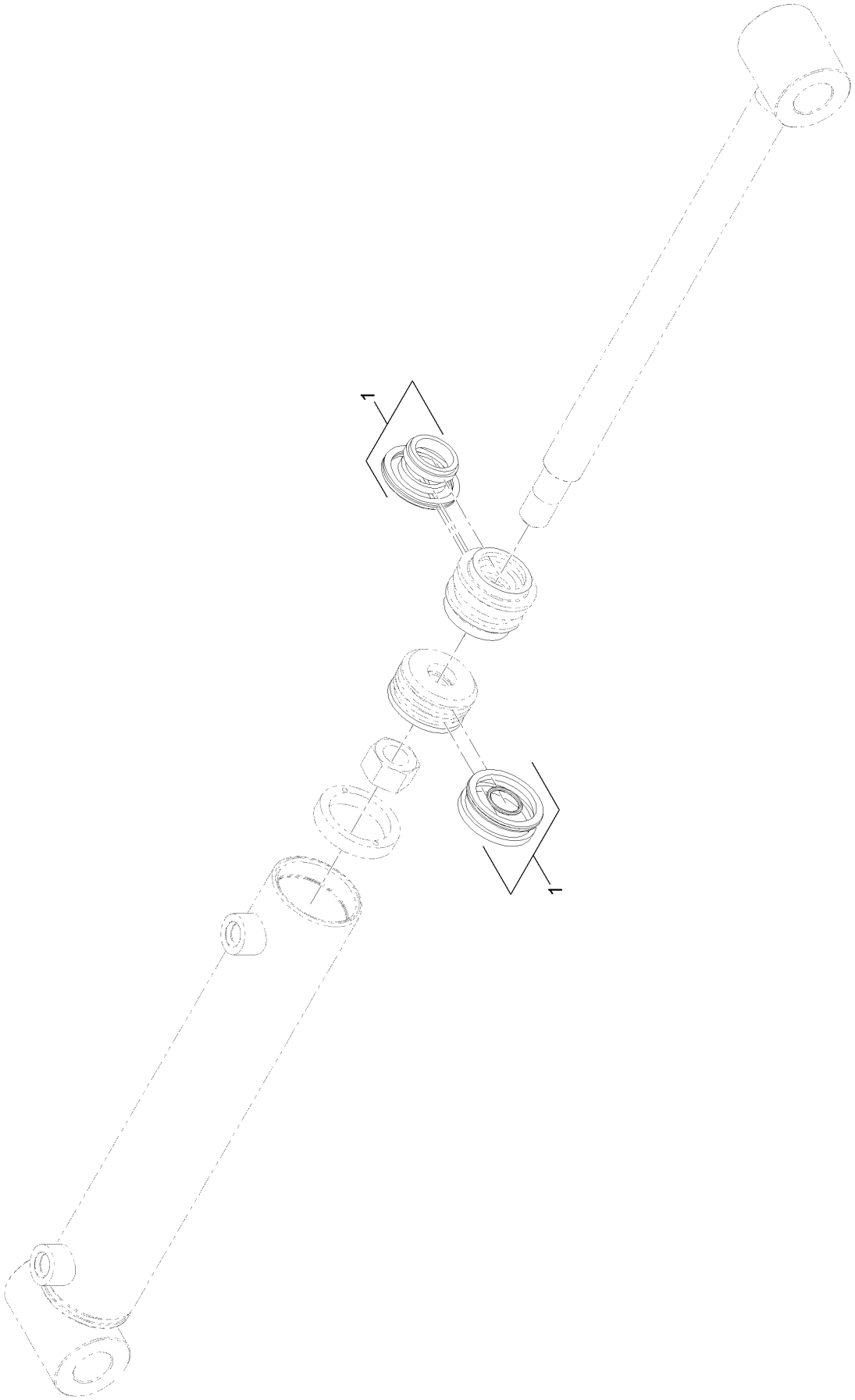

Hydraulic Cylinder Assembly No. 121-1955 (continued)

Ref.	Part Number	Qty.	Description
1	131-0665	1	Seal Kit

Hydraulic Motor Assembly No. 131-0652

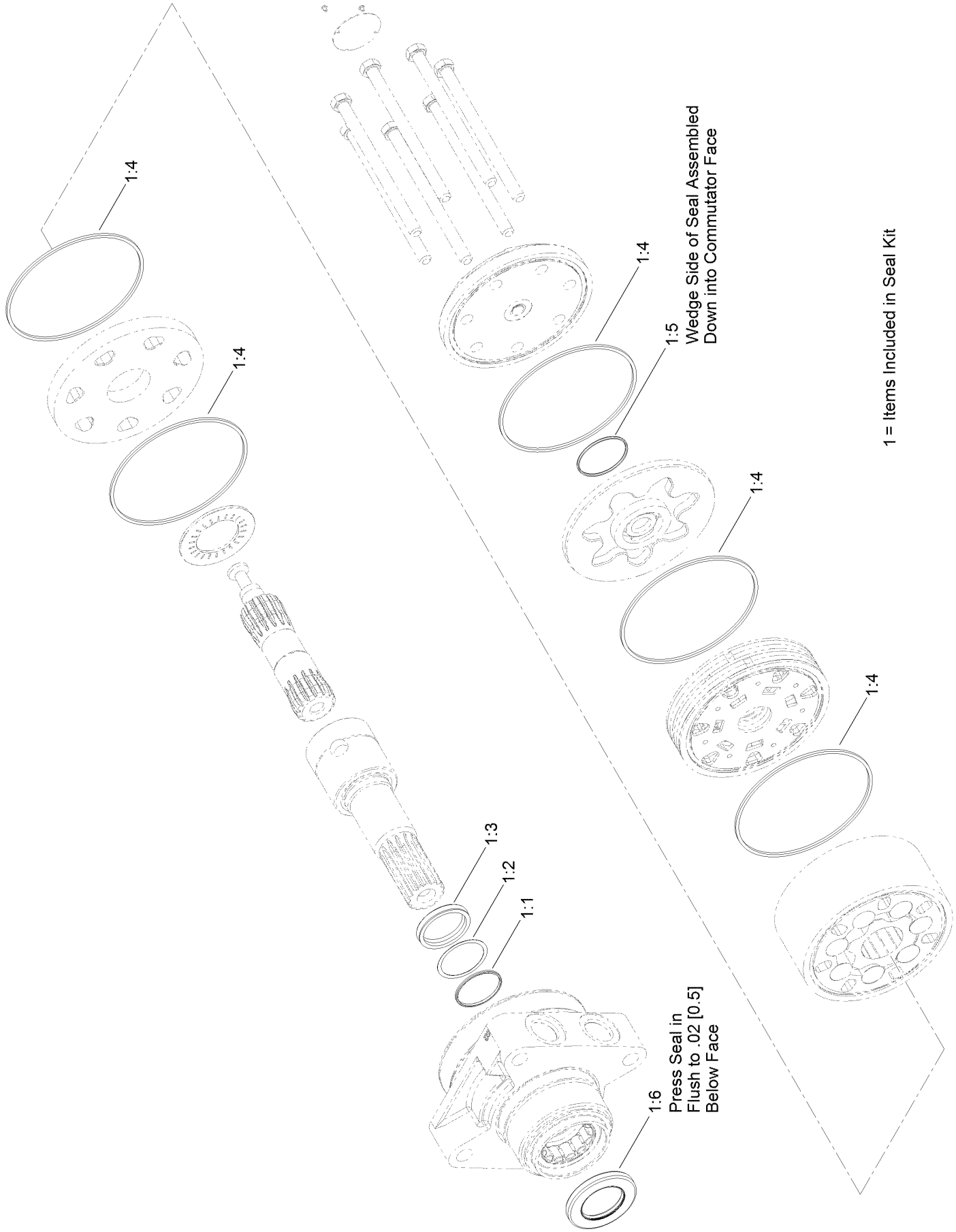

Hydraulic Motor Assembly No. 131-0652 (continued)

Ref.	Part Number	Qty.	Description
1	76-0800	1	Seal Kit
1:1		1	Ring-Back Up ●
1:2		1	Washer-Back Up ●
1:3		1	Seal-Shaft ●
1:4		6	Seal-Ring ●
1:5		1	Seal-Commutator ●
1:6		1	Seal-Dirt And Water ●

● Not serviced separately

Hydraulic Oil Cooler Assembly

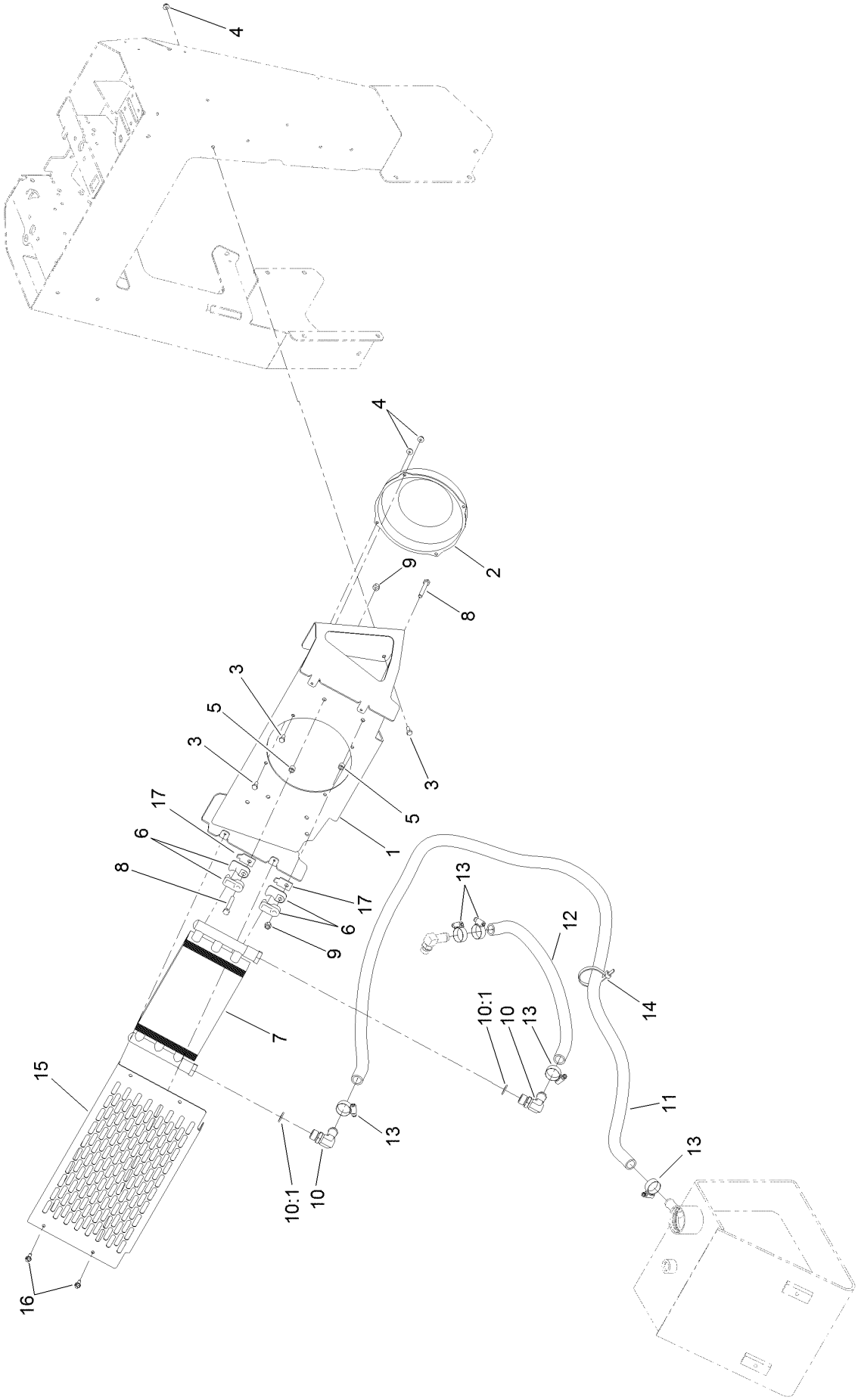

Hydraulic Oil Cooler Assembly (continued)

Ref.	Part Number	Qty.	Description
1	117-6296-01	1	Mount-Cooler
2	104-2809	1	Fan
3	321-3	8	Screw-HH
4	104-7201	8	Nut-HF
5	105-5723	4	Spacer-Tube
6	131-0733	8	Clamp
7	105-0352	1	Exchanger-Heat
8	322-11	4	Screw-HH
9	3296-29	4	Nut-Lock, NI

Ref.	Part Number	Qty.	Description
10	87-8170	2	Fitting-90
10:1	237-80	1	O-Ring
11	115-1207	1	Hose-Return
12	125-0266	1	Hose-Return
13	2412-129	4	Clamp-Hose
14	3334-945	3	Tie-Cable
15	119-4633-01	1	Cover-Cooler
16	32104-95	4	Screw-HWH
17	131-0642	4	Plate-Support, Clamp

Trencher Head and Auger Assembly

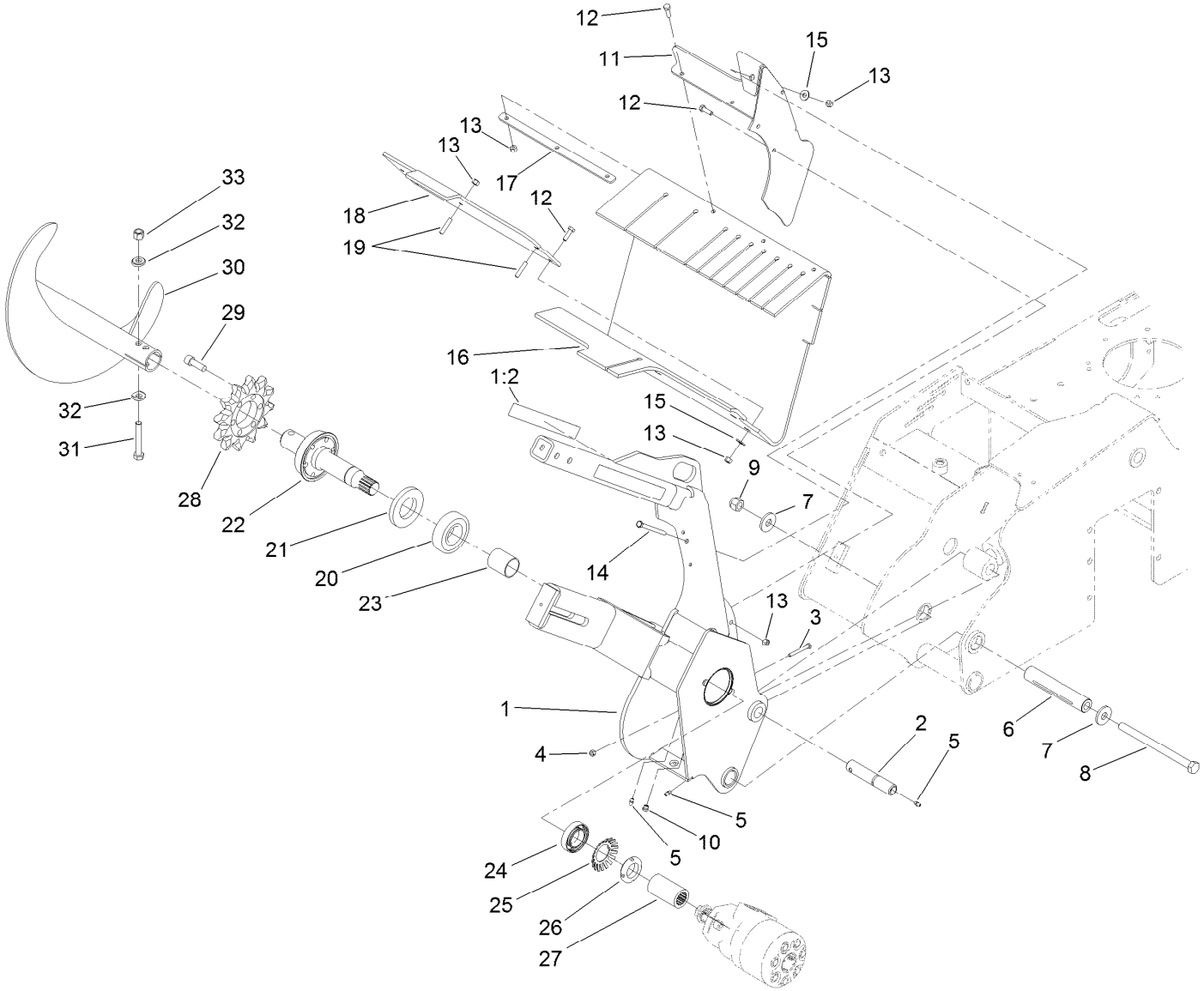

Trencher Head and Auger Assembly (continued)

Ref.	Part Number	Qty.	Description
1	117-6423	1	Trencher Head ASM
1:2	99-9952	2	Decal-Danger
2	120-7352	1	Pin-Pivot
3	321-18	1	Screw-HH
4	3296-42	1	Nut-Lock, NI
5	302-5	3	Fitting-Grease
6	121-4571	1	Spacer-Pivot
7	104-9216	2	Washer-Hardened
8	117-6327	1	Bolt-HH
9	3296-53	1	Nut-Lock, NI
10	302-34	1	Fitting-Lube
11	115-1279-03	1	Bracket-Shield
12	322-5	8	Screw-HH
13	3296-29	11	Nut-Lock, NI
14	322-23	1	Screw-HH
15	3256-3	4	Washer-Flat
16	117-6317	1	Shield-Dirt
17	115-4001-03	1	Plate-Strap, Shield
18	117-6316-03	1	Clamp-Bar
19	115-4049	2	Screw-HSH
20	106-8871	1	Bearing-Ball
21	114-2955	1	Seal-Grease
22	117-6308	1	Shaft-Trencher
23	112-4979	1	Spacer
24	111199	1	Bearing-Ball
25	114-2956	1	Lockwasher-Bearing
26	88-1450	1	Locknut-Bearing
27	117-6315	1	Collar-Splined
28	104-1964	1	Sprocket-Trencher
29	3274-4	6	Screw-HSH
30	137-3737-03	1	Auger-Trencher
31	325-13	1	Screw-HH
32	117-3479	2	Washer-Saddle
33	3296-23	1	Nut-Lock, NI

Traction Control Assembly

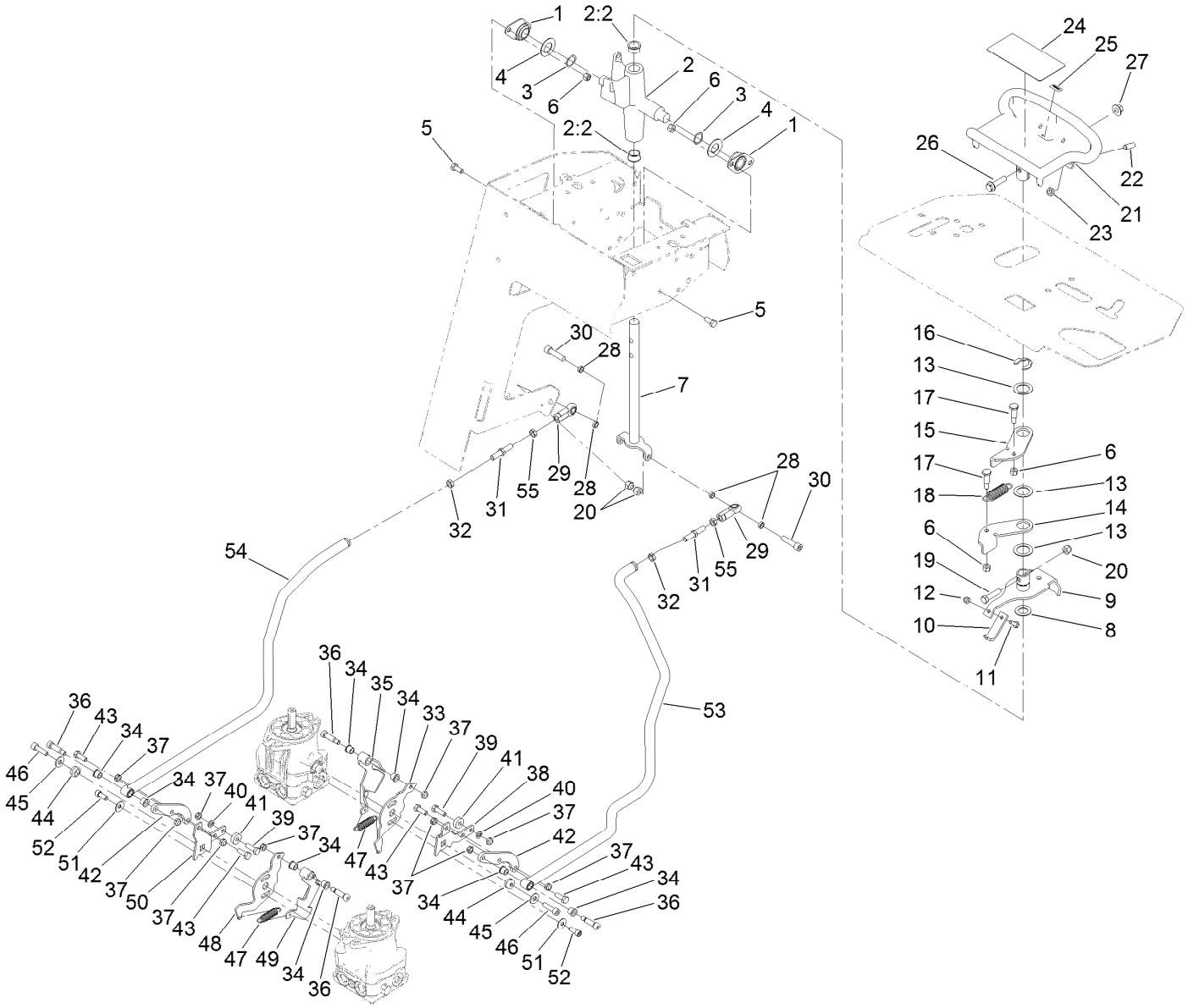

Traction Control Assembly (continued)

Ref.	Part Number	Qty.	Description
1	27-2320	2	Bearing
2	106-5737	1	Control Support ASM
2:2	256-252	2	Bearing-Flange
3	95-3703	2	Washer-Spring, Wave
4	3256-39	2	Washer-Flat
5	322-3	4	Screw-HH
6	3296-29	6	Nut-Lock, NI
7	117-6335	1	Rod-Drive
8	257-8	1	Washer-Thrust
9	112-2783	1	Lever-Pivot
10	115-1204	1	Plate-Neutral
11	321-4	1	Screw-HH
12	3296-42	1	Nut-Lock, NI
13	108-9743	3	Washer-Plain
14	98-8407	1	Lever-Return, RH
15	98-8408	1	Lever-Return, LH
16	32151-91	1	Ring-Retaining
17	63-2650	2	Screw-Shoulder
18	108-4724	1	Spring-Extension
19	323-8	1	Screw-HH
20	3296-39	3	Nut-Lock, NI
21	120-5380-03	1	Handle-Control
22	3247-6	2	Screw-Set
23	3218-3	2	Nut-Jam
24	115-4020	1	Decal-Traction
25	98-1459	1	Decal
26	3234-18	1	Screw-HHF
27	32128-43	1	Nut-Flange
28	108-0634	4	Spacer-Plate, Retaining
29	103-1167	2	Joint-Ball End, LH
30	3274-2	2	Screw-HSH
31	AU107344	2	Screw-Jack, Control
32	3220-3	2	Nut-HJ
33	115-6549	1	Plate-Base, LH
34	256-116	8	Bushing-Flange
35	115-6637	1	Pivot-LH
36	114-8629	4	Bolt-Shoulder
37	3296-47	10	Nut-Lock, NI
38	115-6628	1	Plate-Arm, Return, LH
39	322-5	2	Screw-HH
40	3253-4	2	Washer-Lock
41	251-259	2	Bearing-Ball
42	115-1290	2	Plate-Adapter, Control, RH
43	322-4	4	Screw-HH
44	117-6429	2	Lock-Trunion
45	3256-3	2	Washer-Flat
46	94-3559	2	Screw-HSH
47	121-4409	2	Spring-Extension
48	115-6535	1	Plate-Base, RH
49	115-6636	1	Pivot-RH
50	115-6536	1	Plate-Arm, Return
51	3290-456	2	Washer-Belleville
52	3273-14	2	Screw-HSH
53	131-0668	1	Link-Steering, LH
54	131-0669	1	Link-Steering, RH
55	AU129-289	2	Nut-Jam, LH

Electrical Assembly

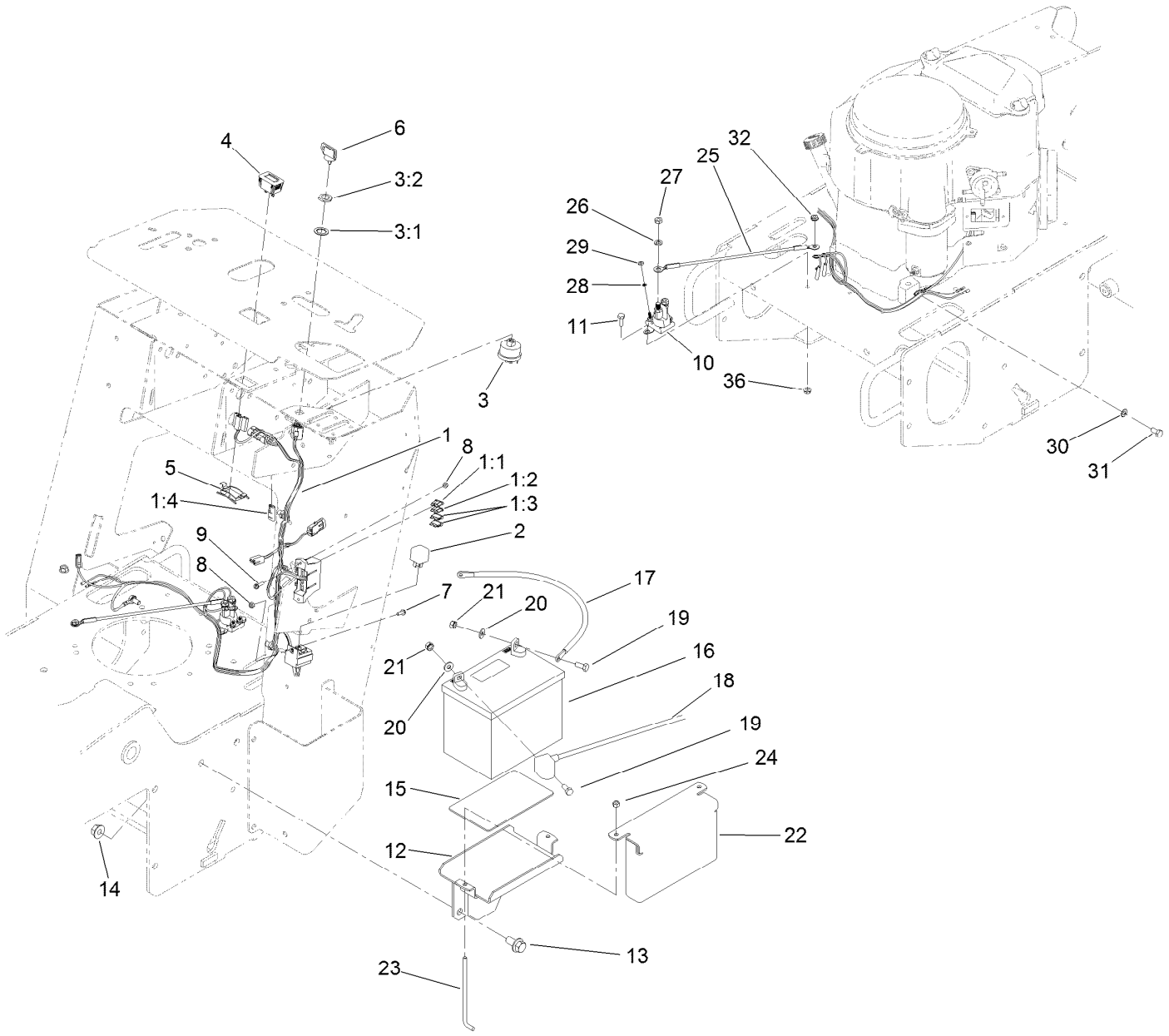

Electrical Assembly (continued)

Ref.	Part Number	Qty.	Description
1	117-6289	1	Harness-Wire
1:1	109103	1	Fuse-Blade, 30 Amp
1:2	109102	1	Fuse-Blade, 25 Amp
1:3	109355	2	Fuse-Blade, 15 Amp
1:4	116-0053	1	Cap-Plug
2	98-7249	1	Relay
3	88-9830	1	Key Switch ASM
3:1	3254-5	1	Washer-Lock
3:2	218-461	1	Nut-HH
4	120-2244	1	Hourmeter
5	104-4234	1	Clip-Mounting
6	63-8360	1	Key-Ignition
7	32105-23	1	Screw
8	3296-2	2	Nut-Lock, NI
9	32105-13	1	Screw-HWH
10	117-1197	1	Solenoid
11	321-4	2	Screw-HH
12	105-3150-01	1	Tray-Battery
13	3234-6	2	Screw-HHF
14	32128-49	2	Nut-HHF
15	62-4300	1	Pad-Skid, Anti
16	104-8162	1	Battery
17	112-9708	1	Cable-Battery, Red
18	117-6422	1	Cable-Battery, Black
19	322-3	2	Screw-HH
20	3256-2	2	Washer-Flat
21	32149-1	2	Nut-Keps
22	115-6621-03	1	Plate-Hold Down, Battery
23	104-8567	2	Holdown-Battery
24	3296-42	2	Nut-Lock, NI
25	28-3891	1	Wire-Solenoid/Starter
26	3253-4	2	Washer-Lock
27	3220-2	2	Nut-Jam
28	3253-17	2	Washer-Lock
29	3219-14	2	Nut-Hex
30	3255-8	1	Washer-Lock
31	33114-016	1	Screw-HH
32	32149-2	1	Nut-Keps
36	32128-33	2	Nut-HF

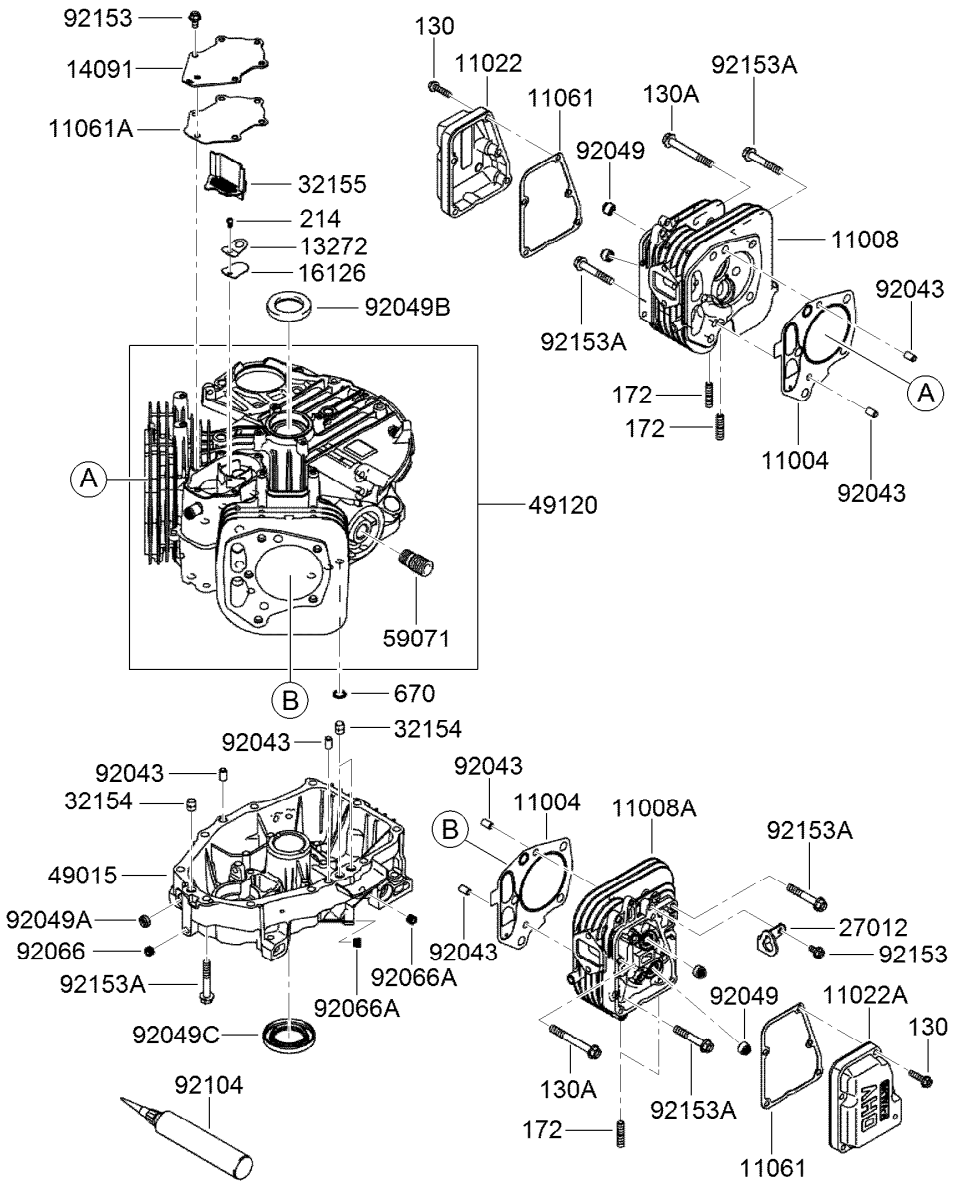

Cylinder and Crankcase Assembly

Ref.	Part Number	Qty.	Description
130	93-8548	10	Bolt-Flanged (6X25)
130A	120-7406	6	Bolt-Flanged (8X70)
172	114-8658	4	Bolt-Stud (8X18)
214	115-6422	1	Screw-Pan (4X8)
670	95-9771	2	O-Ring (11Mm)
11004	120-7400	2	Gasket-Head
11008	120-7478	1	Cylinder Head No.1 ASM
11008A	120-7479	1	Cylinder Head No.2 ASM
11022	119-5803	1	Case-Rocker (No.1)
11022A	119-5804	1	Case-Rocker (No.2)
11061	119-5805	2	Gasket-Case, Rocker
11061A	119-5806	1	Gasket-Breather
13272	119-5808	1	Plate-Breather
14091	119-5809	1	Cover-Breather
16126	119-5810	1	Valve-Breather
27012	120-7480	1	Hook-Lift

Ref.	Part Number	Qty.	Description
32154	119-5811	3	Pipe
32155	119-5812	1	Pipe-Breather
49015	120-7481	1	Cover-Crankcase
49120	120-7482	1	Crankcase ASM
59071	95-9715	1	Joint
92043	KW10694	6	Pin
92049	114-8650	4	Seal-Oil, Rv C2 (6X11X10.2)
92049A	119-5816	1	Seal-Oil, So (8X14X5) Hs
92049B	119-5817	1	Seal-Oil, Sd (35X48X8) R Hs
92049C	119-5818	1	Seal-Oil (38X62X8) Mtclv
92066	119-5819	1	Plug
92066A	119-5820	2	Plug
92104	119-5821	1	Gasket-Liquid (Tb1217H)
92153	114-8655	7	Bolt (6X12)
92153A	114-8656	14	Bolt (8X50)

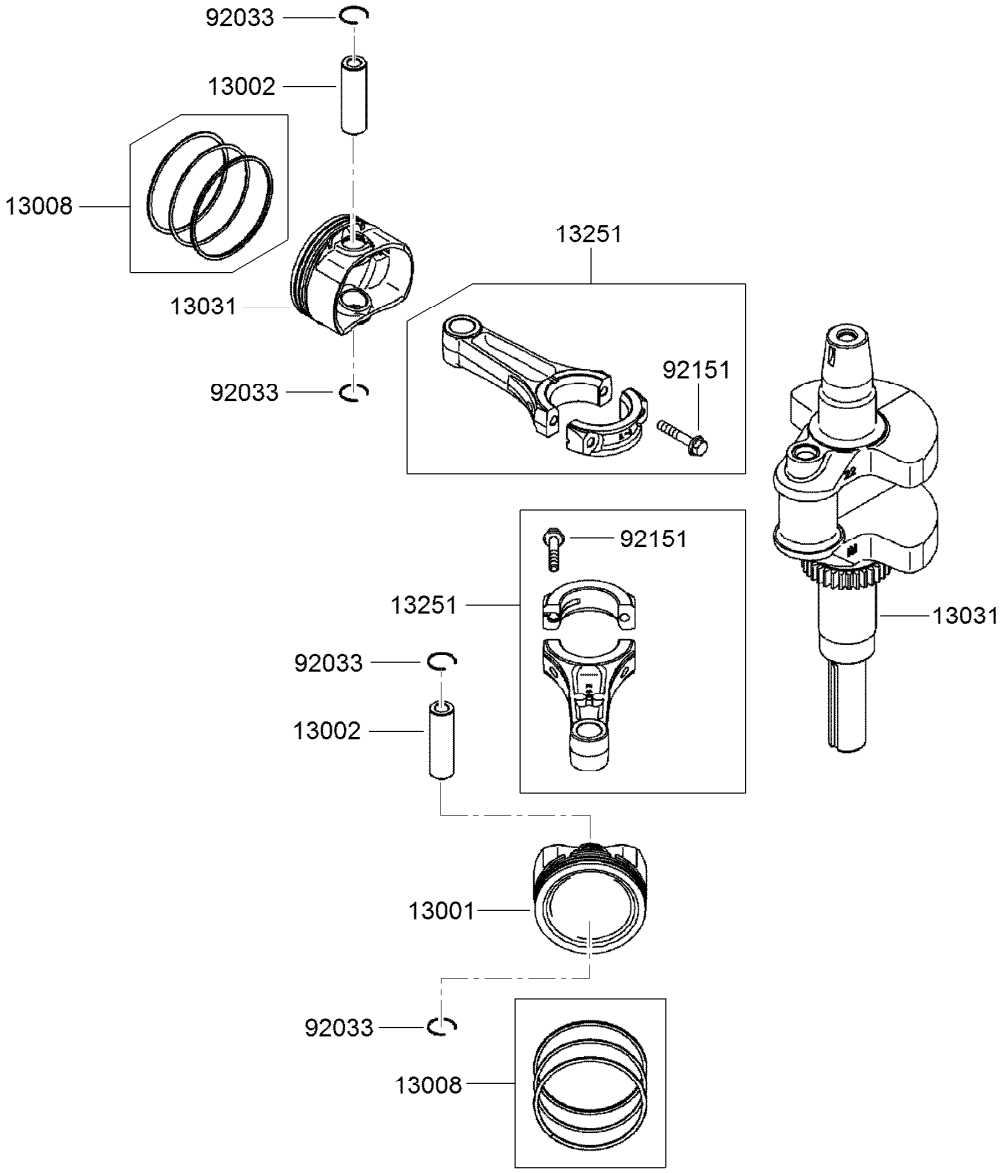

Piston and Crankshaft Assembly

Ref.	*Part Number*	*Qty.*	*Description*
13001	120-7483	2	Piston-Engine
13002	108-2517	2	Pin-Piston
13008	120-7484	2	Piston Ring Set
13031	120-7485	1	Crankshaft ASM
13251	120-7412	2	Connecting Rod ASM
92033	114-8665	4	Ring-Snap
92151	115-6565	4	Bolt (6X35)

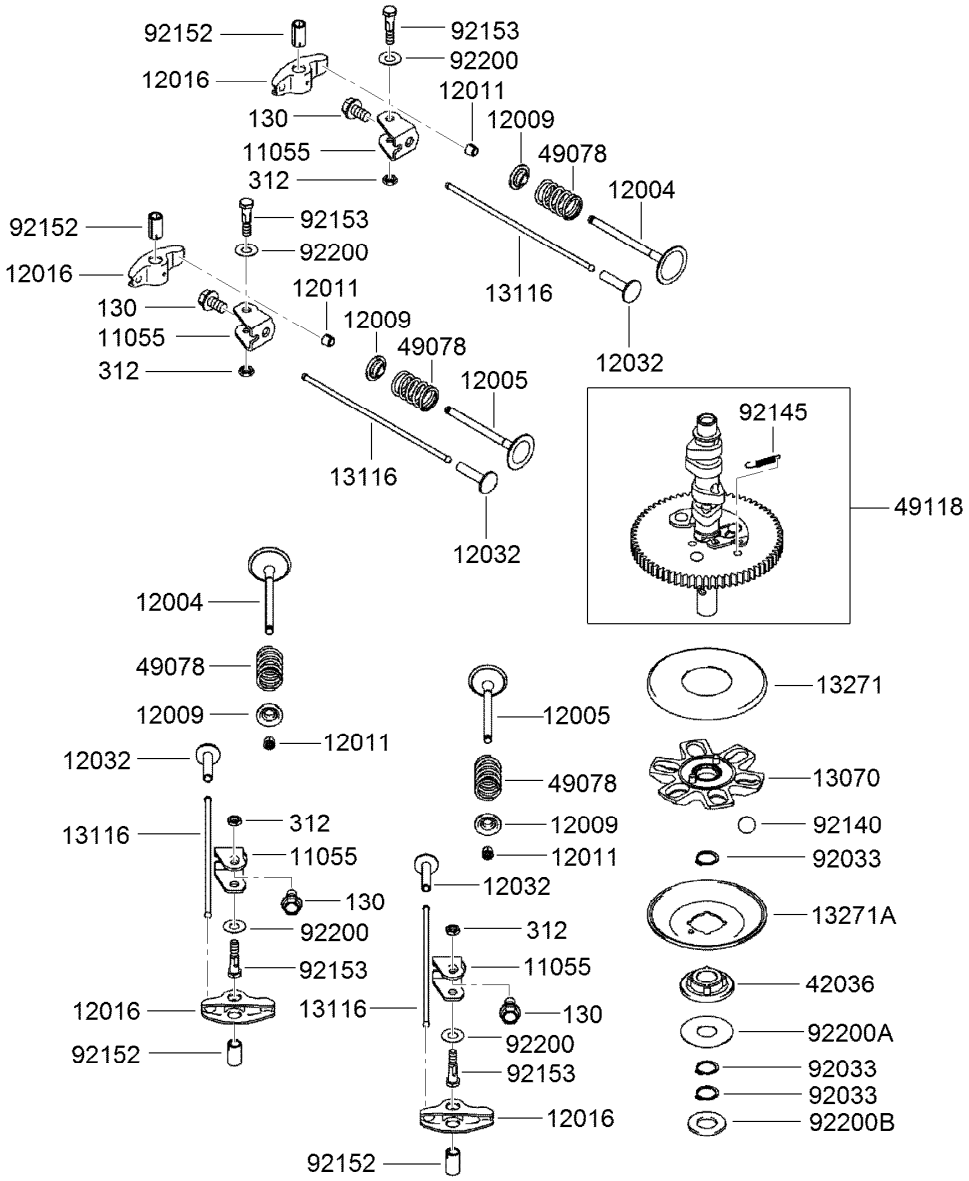

Valve and Camshaft Assembly

Ref.	Part Number	Qty.	Description
130	119-5845	4	Bolt-Flanged (8X14)
312	119-5846	4	Nut-Hex (6Mm)
11055	119-5832	4	Bracket
12004	120-7413	2	Valve-Intake
12005	120-7414	2	Valve-Exhaust
12009	108-2525	4	Retainer-Spring, Valve
12011	95-9744	8	Collet
12016	119-5835	4	Arm-Rocker
12032	108-2527	4	Tappet
13070	119-5836	1	Guide-Govenor
13116	120-7415	4	Rod-Push
13271	114-8671	1	Plate

Ref.	Part Number	Qty.	Description
13271A	114-8672	1	Plate-Governor
42036	114-8673	1	Sleeve
49078	119-5838	4	Spring-Valve, Engine (In)
49118	120-7417	1	Camshaft ASM
92033	114-8675	3	Ring-Snap
92140	114-8676	6	Ball
92145	114-8677	1	Spring
92152	119-5840	4	Collar
92153	119-5841	4	Bolt (6X29.5)
92200	119-5842	4	Washer (8.1X18X0.5)
92200A	119-5843	1	Washer (16X42X0.91)
92200B	119-5844	1	Washer (16.3X30X2.28)

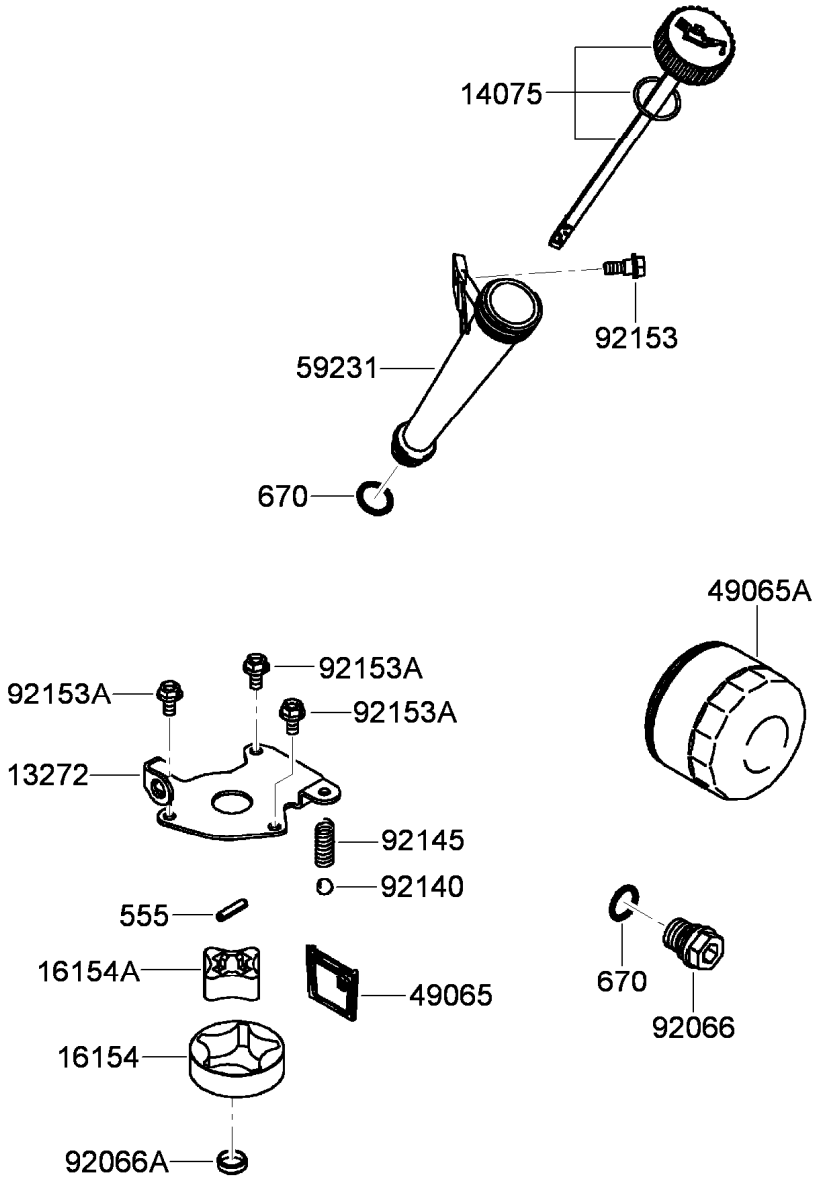

Lubrication Equipment Assembly

Ref.	Part Number	Qty.	Description
555	119-5859	1	Pin-Spring (4X20)
670	1-413506	2	Discontinued
13272	119-5847	1	Plate-Rotor
14075	119-5848	1	Oil Gauge Cap ASM
16154	119-5849	1	Rotor-Pump, Outer
16154A	119-5850	1	Rotor-Pump, Inner
49065	119-5851	1	Filter-Oil
49065A	119-5852	1	Filter-Oil
59231	119-5853	1	Tube-Filler, Oil
92066	119-5854	1	Plug
92066A	119-5855	1	Plug
92140	119-5856	1	Ball
92145	119-5857	1	Spring
92153	114-8697	1	Bolt
92153A	115-6419	3	Bolt (6X12)

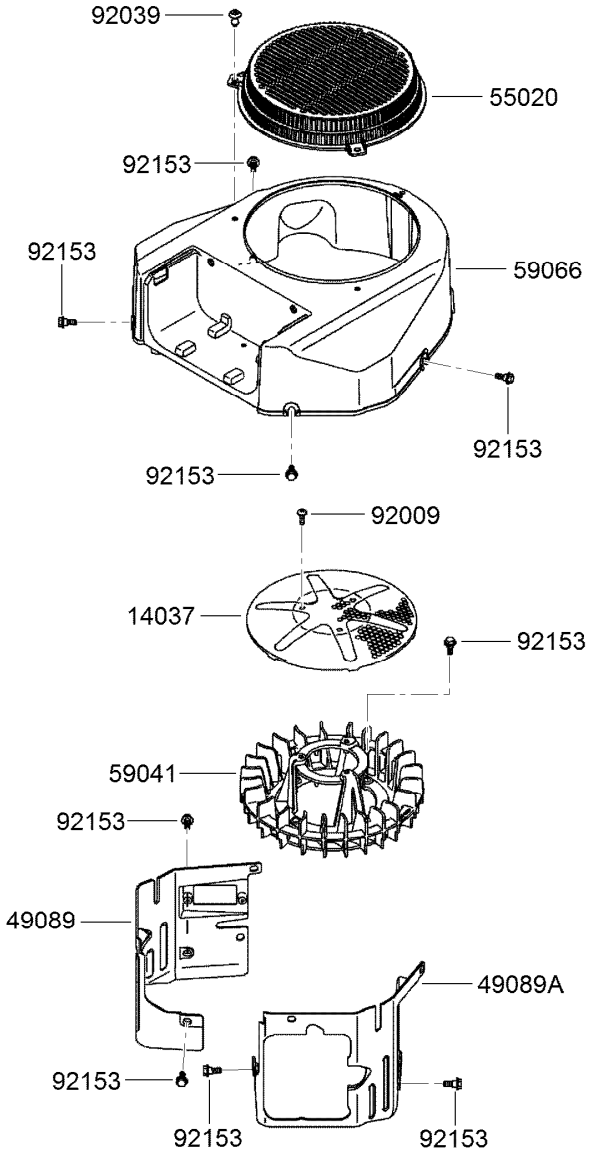

Cooling Equipment Assembly

Ref.	*Part Number*	*Qty.*	*Description*
14037	120-7486	1	Screen
49089	120-7420	1	Shroud-Engine
49089A	120-7421	1	Shroud-Engine
55020	120-7487	1	Guard-Screen
59041	120-7488	1	Fan
59066	120-7489	1	Housing-Fan
92009	119-5879	3	Screw
92039	120-7490	3	Rivet-Guard
92153	120-7424	12	Bolt

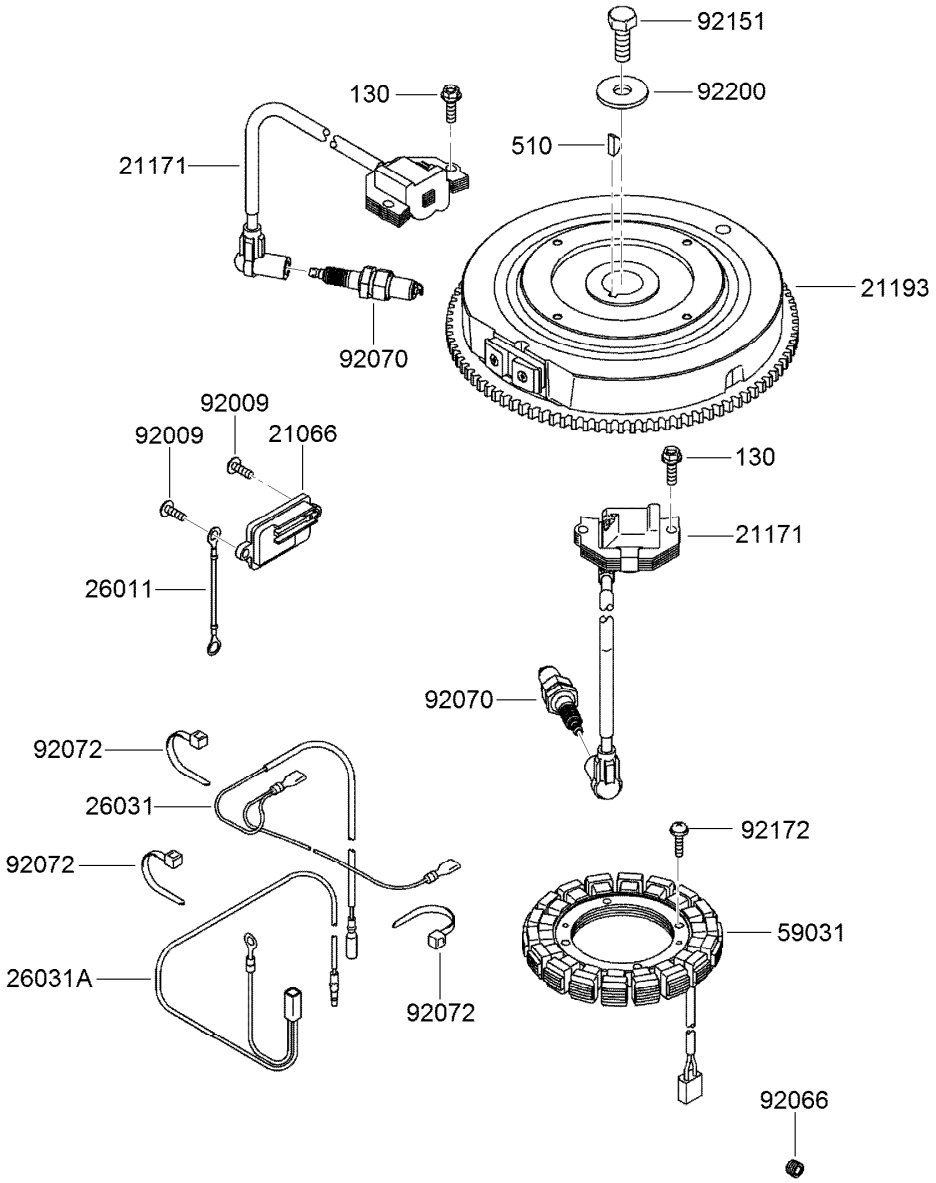

Electric Equipment Assembly

Ref.	Part Number	Qty.	Description
130	95-9893	4	Bolt-Flanged (6X20)
510	KW10163	1	Key-Woodruff
21066	120-7356	1	Regulator-Voltage
21171	119-5872	2	Ignition Coil ASM
21193	120-7491	1	Flywheel ASM
26011	120-7492	1	Wire-Lead (L=95)
26031	119-5876	1	Harness
26031A	120-7493	1	Harness

Ref.	Part Number	Qty.	Description
59031	120-7494	1	Coil-Charging
92009	119-5879	2	Screw
92066	119-5820	1	Plug
92070	92-2153	2	Plug-Spark
92072	115-6585	3	Band
92151	115-6408	1	Bolt (12X30)
92172	115-4030	4	Screw (5X20)
92200	115-4031	1	Washer (12.2X46X3)

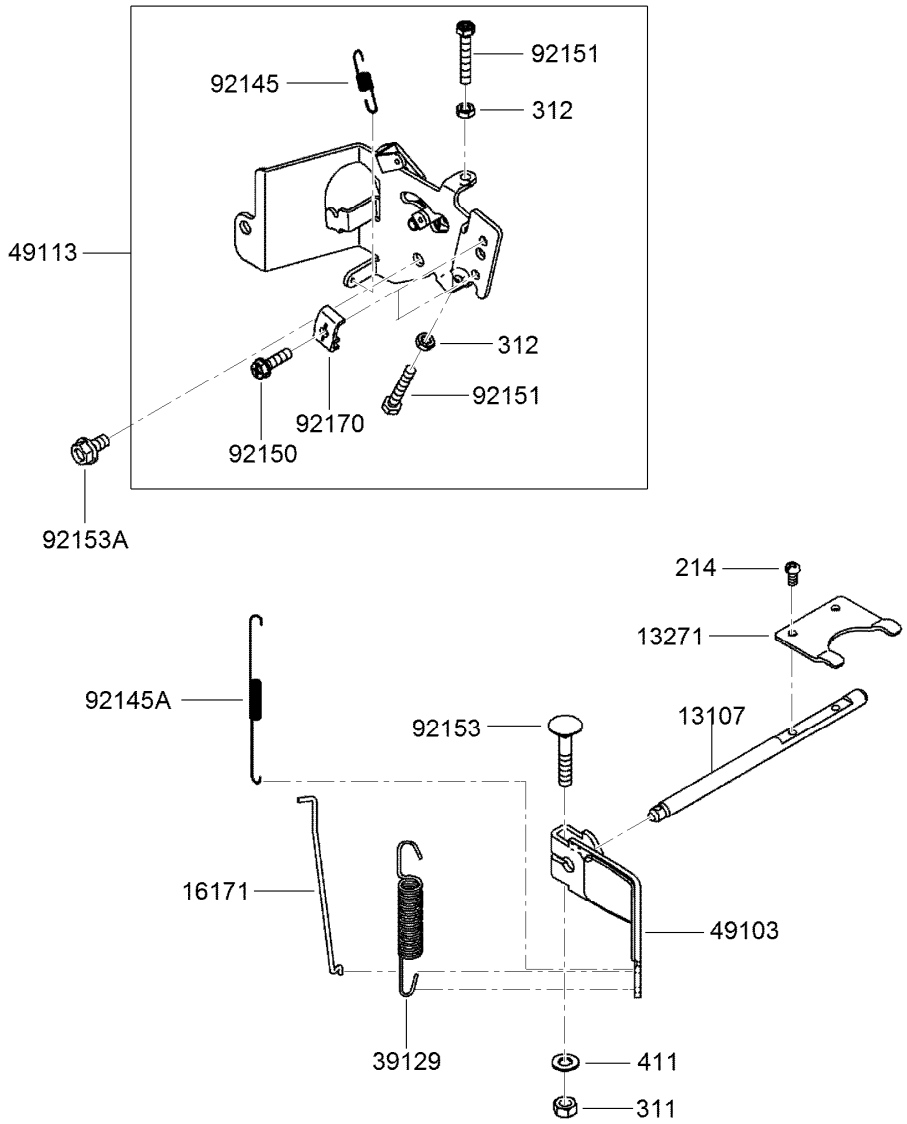

Control Equipment Assembly

Ref.	Part Number	Qty.	Description
214	115-6422	2	Screw-Pan (4X8)
311	114-8698	1	Nut-Hex (6Mm)
312	119-5894	2	Nut-Hex (5Mm)
411	115-6423	1	Washer-Plain (6Mm)
13107	120-7428	1	Shaft
13271	119-5883	1	Plate
16171	120-7495	1	Link
39129	120-7496	1	Spring-Governor
49103	120-7431	1	Arm-Governor

Ref.	Part Number	Qty.	Description
49113	120-7497	1	Control Panel ASM
92145	120-7498	1	Spring
92145A	119-5889	1	Spring
92150	95-9853	2	Bolt (5X18)
92151	119-5891	2	Bolt (5X30)
92153	115-6420	1	Bolt (6X35)
92153A	114-8655	1	Bolt (6X12)
92170	115-6421	2	Clamp

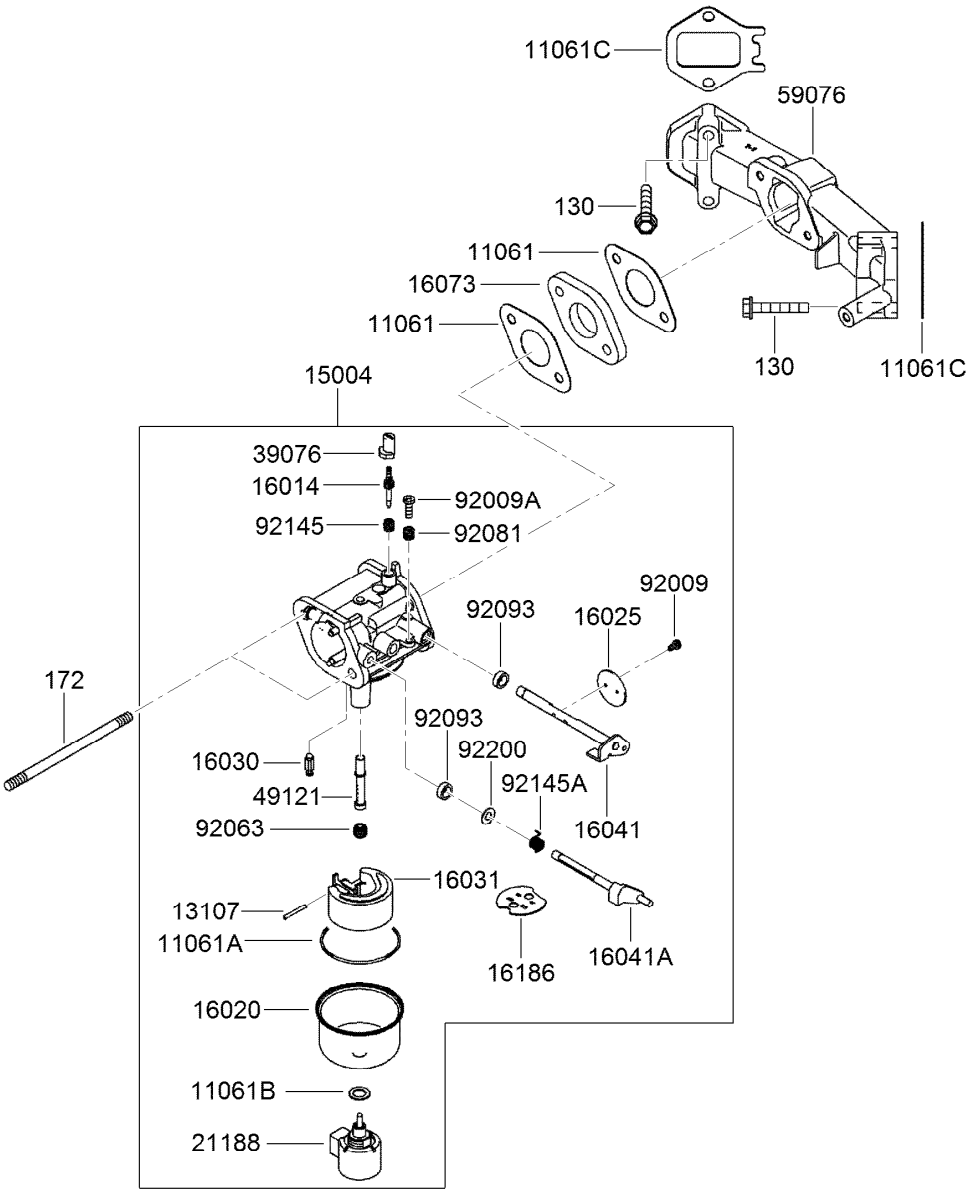

Carburetor Assembly

Ref.	Part Number	Qty.	Description
130	115-6591	4	Bolt-Flanged (6X35)
172	120-7446	2	Bolt-Stud (6X95)
11061	115-6424	2	Gasket-Insulator
11061A	115-6425	1	Gasket-Chamber
11061B	108-2580	1	Gasket-Screw
11061C	120-7433	2	Gasket-Manifold
13107	115-6427	1	Shaft
15004	120-7499	1	Carburetor ASM
16014	120-7436	1	Screw-Air, Pilot
16020	115-6430	1	Chamber-Float
16025	115-6431	2	Valve-Throttle
16030	115-6432	1	Valve-Float
16031	115-6433	1	Float
16041	115-6435	1	Shaft-Throttle, Carburetor
16041A	120-7437	1	Shaft-Carburetor, Choke

Ref.	Part Number	Qty.	Description
16073	115-6594	1	Insulator
16186	120-7438	1	Choke Valve ASM
21188	115-6597	1	Solenoid
39076	108-2593	1	Limiter
49121	120-7500	1	Nozzle-Main
59076	120-7440	1	Manifold-Intake
92009	108-2595	2	Screw
92009A	108-2596	1	Screw
92063	120-7443	1	Jet-Main, No. 102
92081	108-2598	1	Spring
92093	108-2599	2	Seal
92145	108-2600	1	Spring
92145A	120-7444	1	Spring
92200	120-7445	1	Washer (9.8X5.5X1.0)

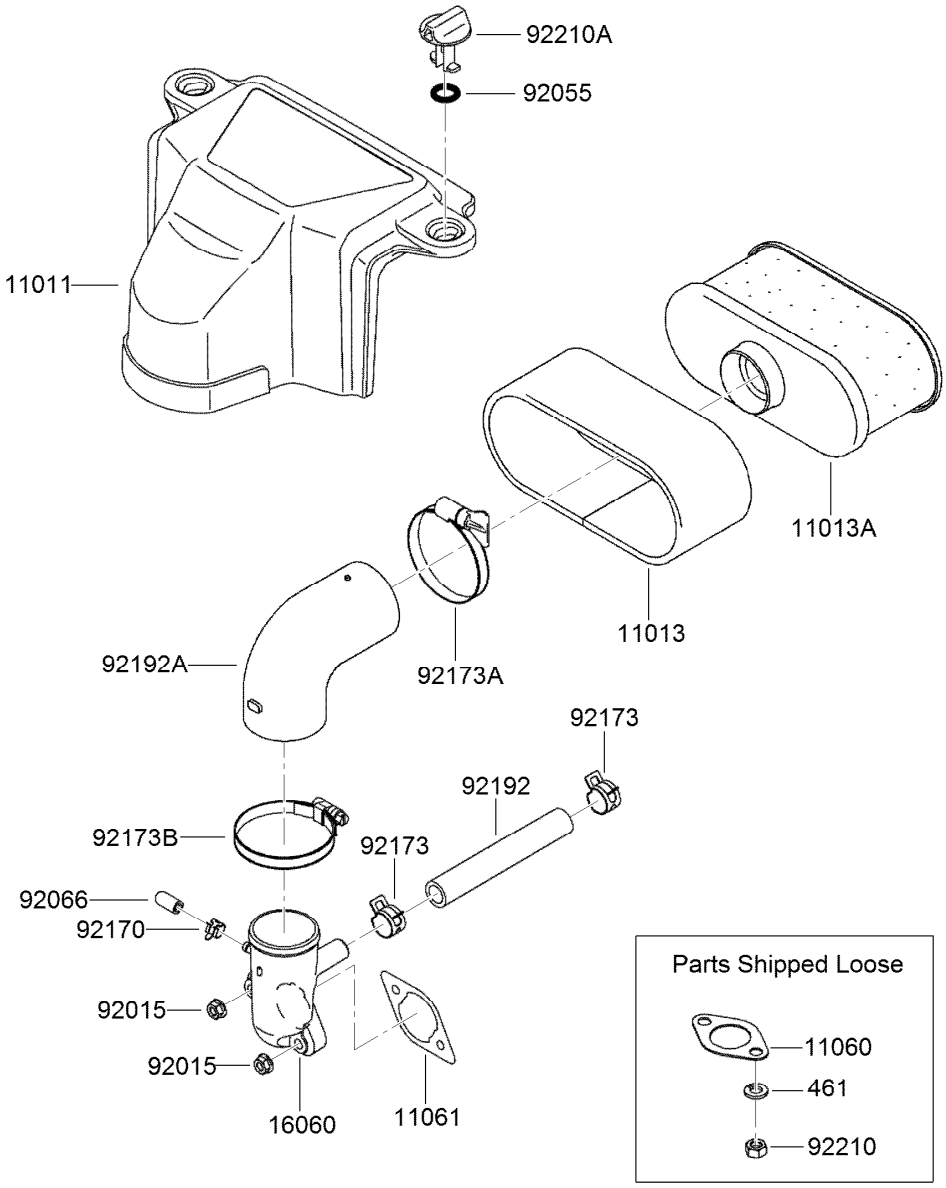

Air Filter and Muffler Assembly

Ref.	Part Number	Qty.	Description
461	119-5962	4	Washer-Spring (8Mm)
11011	120-7477	1	Case-Filter, Air
11013	120-7501	1	Element-Filter, Air
11013A	120-7502	1	Element-Filter, Air
11060	119-5948	2	Gasket-Muffler
11061	115-6426	1	Gasket-Cleaner, Air
16060	120-7450	1	Pipe-Intake
92015	119-5954	2	Nut
92055	120-7451	2	O-Ring

Ref.	Part Number	Qty.	Description
92066	120-7452	1	Plug
92170	120-7453	1	Clamp
92173	119-5956	2	Clamp
92173A	120-7454	1	Clamp
92173B	120-7455	1	Clamp
92192	119-5957	1	Tube (12.6X18.6X118)
92192A	120-7503	1	Tube-A/C
92210	119-5959	4	Nut (M8)
92210A	120-7457	2	Nut

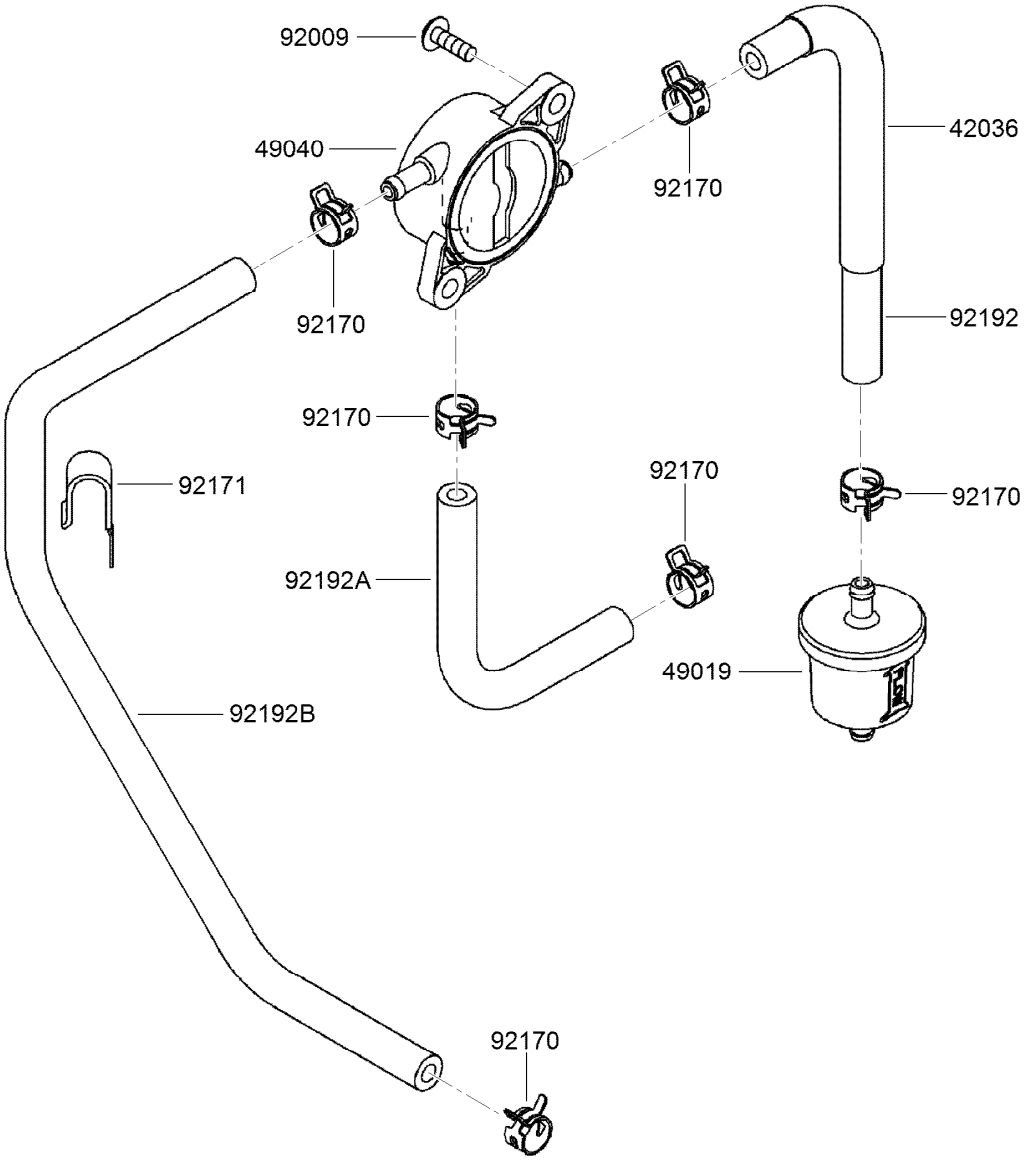

Fuel Pump and Filter Assembly

Ref.	*Part Number*	*Qty.*	*Description*
42036	119-5963	1	Sleeve
49019	121-4570	1	Filter-Fuel
49040	119-5965	1	Pump-Fuel
92009	119-5879	2	Screw
92170	119-5967	6	Clamp
92171	119-5968	1	Clamp
92192	119-5969	1	Tube (6.35X12.7X185)
92192A	119-5970	1	Tube (6.4X12.7X150)
92192B	120-7516	1	Tube (6.35X12.7X360)

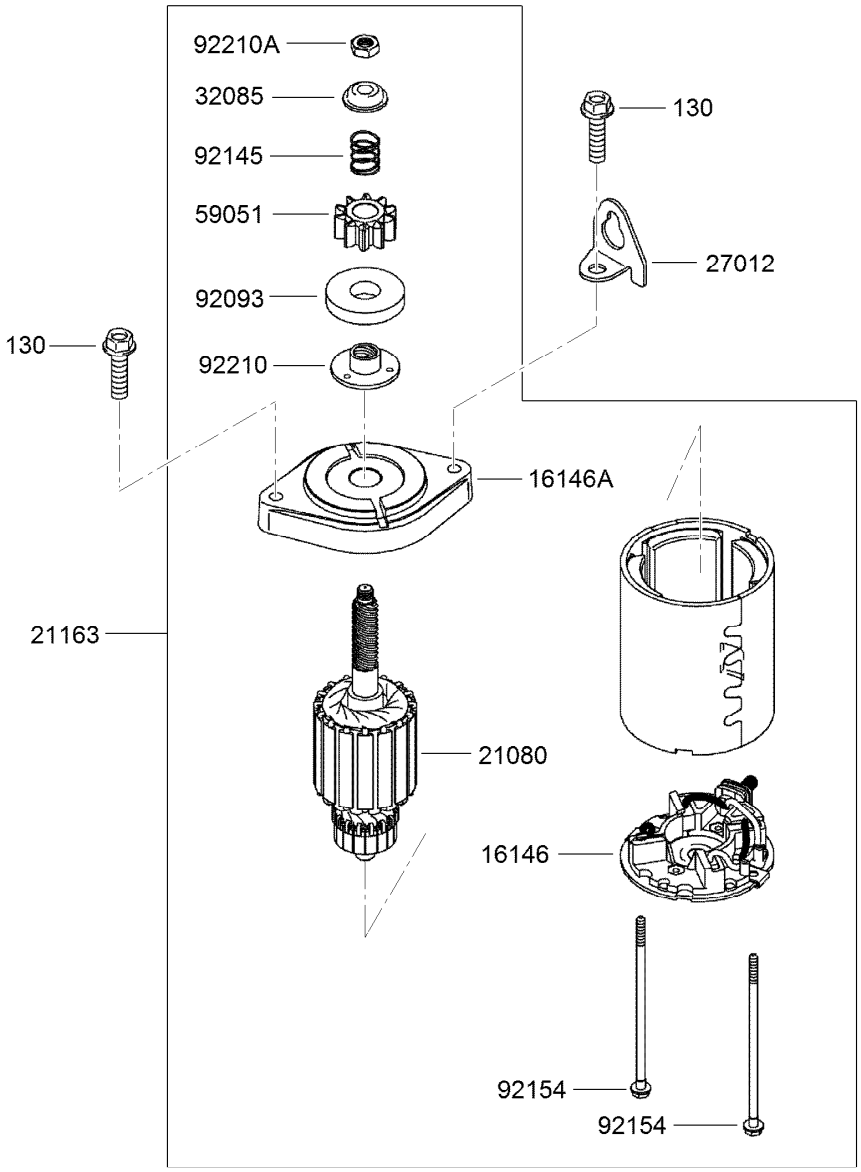

Starter Assembly

Ref.	Part Number	Qty.	Description
130	120-7515	2	Bolt-Flanged (8X30)
16146	120-7504	1	Cover ASM
16146A	120-7505	1	Cover ASM
21080	120-7506	1	Armature
21163	120-7507	1	Electric Starter ASM
27012	119-5983	1	Hook
32085	120-7508	1	Stopper
59051	120-7509	1	Gear-Spur
92093	120-7510	1	Seal
92145	120-7511	1	Spring
92154	120-7512	2	Bolt
92210	120-7513	1	Nut
92210A	120-7514	1	Nut

56070

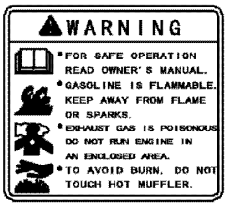

56080

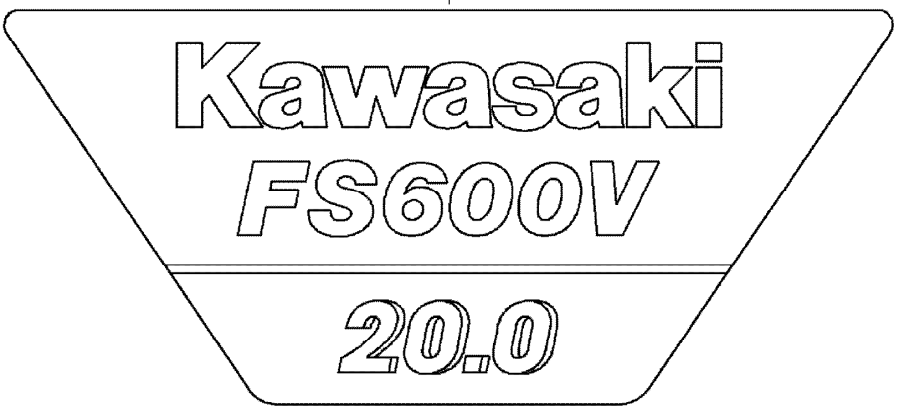

Label Set

Ref.	Part Number	Qty.	Description
56070	108-2625	1	Label-Warning
56080	120-7517	1	Label-Brand

Attachments and Accessories

For 22973 TRX-20 Trencher

Product Name	Model/Part
8in Chain Conversion Kit for 36in Soil Chain	117-3480
Crumber Kit	22477
24in X 4in Soil Chain	22480
24in X 4in Combination Chain	22481
24in X 4in Rock Tooth Chain	22482
24in X 6in Soil Chain	22483
24in X 6in Combination Chain	22484
24in X 6in Rock Tooth Chain	22485
36in X 4in Soil Chain	22486
36in X 4in Combination Chain	22487
36in X 4in Rock Tooth Chain	22488
36in X 6in Rock Tooth Chain	22489
36in X 6in Soil Chain	22490
36in X 6in Combination Chain	22491
48in x 4in Soil Chain	22492
48in x 4in Combination Chain	22493
48in x 6in Soil Chain	22494
48in x 6in Combination Chain	22495
24in X 4in Bullet Chain	22496
24in X 6in Bullet Chain	22497
36in X 4in Bullet Chain	22498
36in X 6in Bullet Chain	22499
24in Trencher Boom	22975
36in Trencher Boom	22976
48in Trencher Boom	22977
Bore Drive Attachment	22978
Backfill Blade	22980
Spark Arrestor Screen	94-8157

Notes:

Notes:

Notes:

TORO®

Count on it.