FORM NO. 3310-481

TORO®

MODEL NO. 21900-300001 & UP

PARTS CATALOG

21" WHIRLWIND® LANDSCAPER H.P.

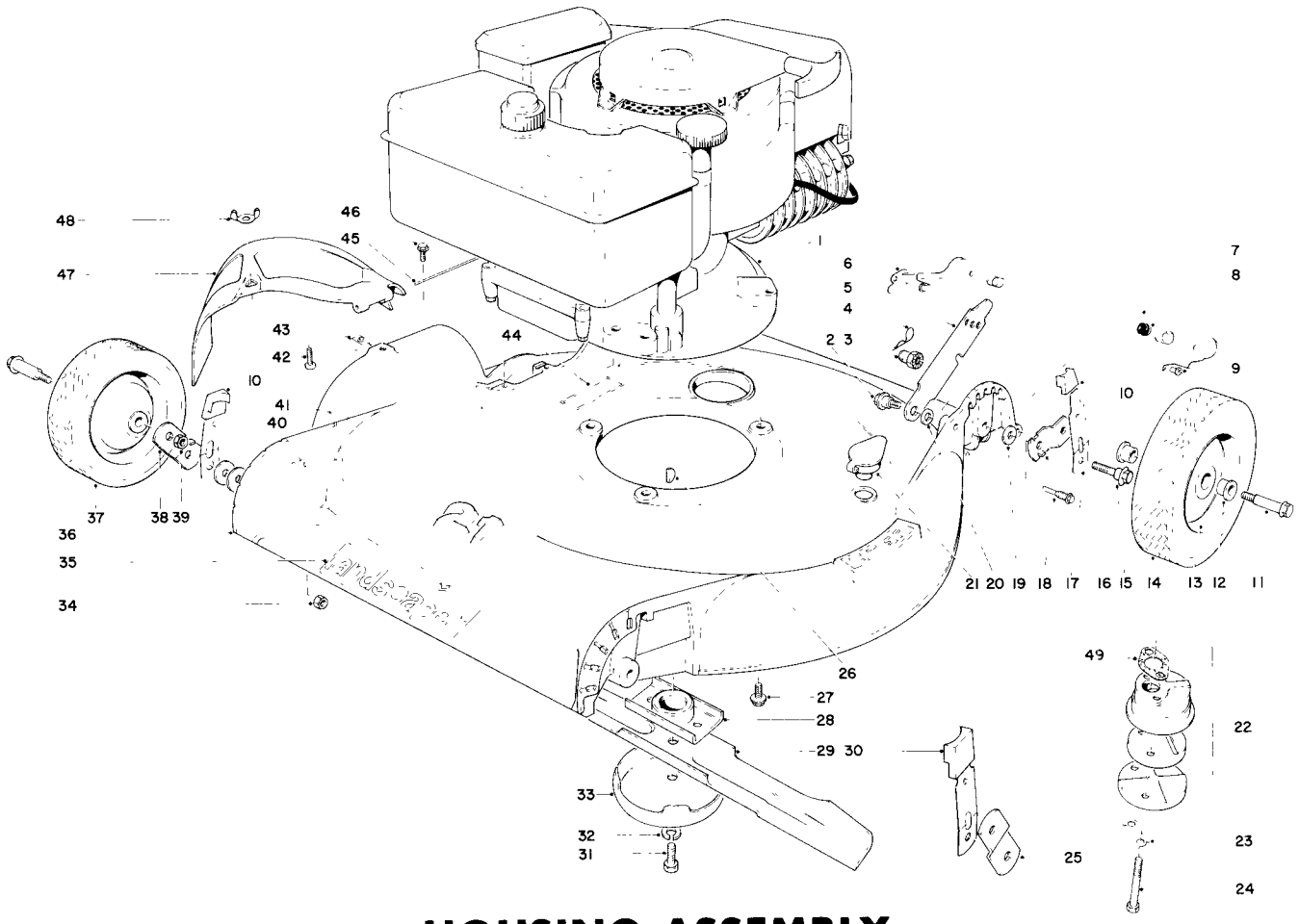

HOUSING ASSEMBLY

Ref. No.	Part No.	Description	No. Used
1	221-454	Engine	1
2	5-2490	Shoulder Screw	2
3	12-2080	Handle Pivot Nut	2
4	3290-255	Hair Pin Cotter	2
5	5-2446	Handle Latch	2
6	19-5680	Restraint R.H.	1
*	19-5740	Restraint L.H.	1
7	19-5780	Safety Shield (Incl. Ref. 8 & 9)	1
8	5-6450	Skid Button	2
9	8-6080	Bushing	2
10	6-6220	Arm Knob	2
11	3-2652	Wheel Bolt	4
12	5-4504	Bushing	8
13	3-7350	Wheel Assembly (Incl. Ref. 12)	4
14	4-2600	Tire (8")	2
15	12-2440	Pivot Screw	4
16	18-9590	Spring Arm	4

Ref. No.	Part No.	Description	No. Used
17	20-3190	Pivot Arm	2
18	8-6160	Safety Shield Screw	2
19	5-4460	Pivot Washer	5
20	3-3287	Handle Latch Spacer	2
21	6-4500	Washout Port	1
22	2-9319	Muffler Assy. (Incl. Ref. 23 & 24)	1
23	3-5094	Locking Clip	1
24	321-10	Capscrew	2
25	20-3170	Pivot Arm (C)	1
26	3257-3	Woodruff Key	1
27	11-0590	Screw	3
28	8-5380	Blade Retainer	1
29	8-5230	Blade	1
30	6-6230	Arm Knob	2
31	3-5246	Screw	1
32	3253-22	Lockwasher	1
33	8-4240	Anti-scalp Cup	1

*Not Illustrated

Copyright 1973 by
The Toro Company
Bloomington, Minnesota 55420 U.S.A.

Price $1.00

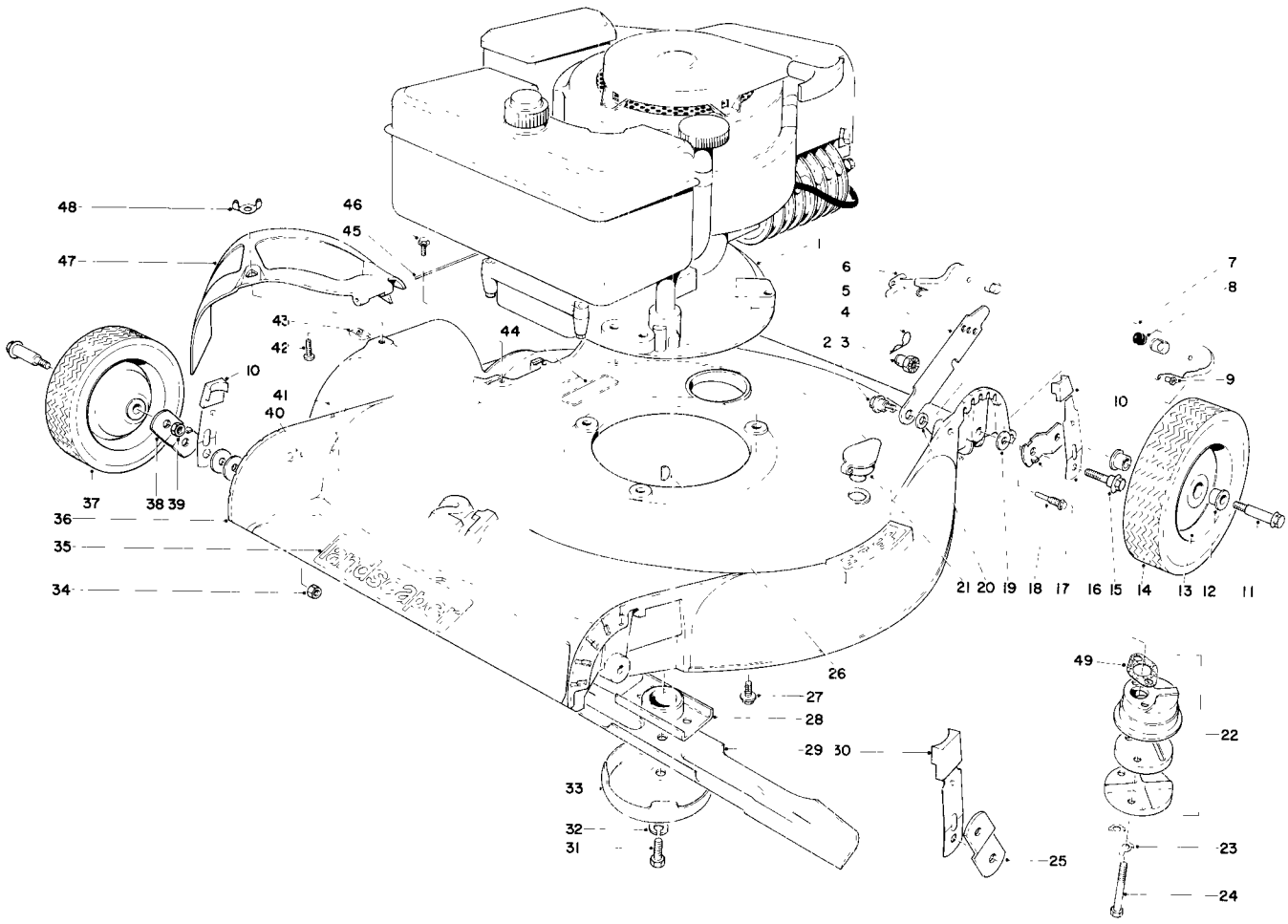

HOUSING ASSEMBLY (Continued)

Ref. No.	Part No.	Description	No. Used
34	32146-5	Nut	2
35	20-3230	Decal	1
36	5-9839	Housing 21"	1
37	5-0660	Tire (7")	2
38	20-3180	Pivot Arm (D)	1
39	32146-12	Locknut	4
40	32104-17	Self-tapping Screw	2
41	12-2990	Safety Bar	1

Ref. No.	Part No.	Description	No. Used
42	3290-133	Screw	1
43	3290-199	Speed Nut	1
44	3-7643	Warning Decal	1
45	3-2644	Hinge Pin	1
46	12-5450	Screw	2
47	12-2270	Deflector	1
48	32103-14	Wing Nut	1
49	11-9580	Gasket	1

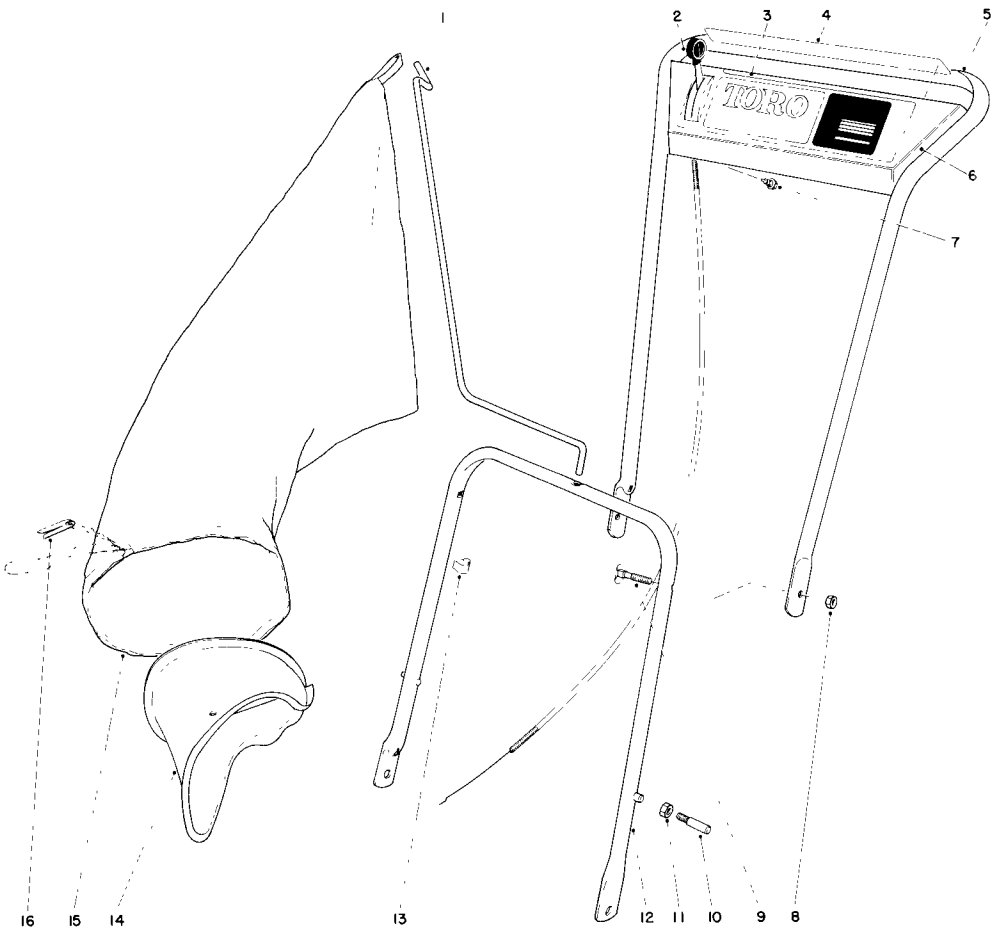

HANDLE ASSEMBLY

Ref. No.	Part No.	Description	No. Used
1	19-4210	Bag Hanger Rod	1
2	17-9390	Throttle Control	1
3	20-3320	Escutcheon Plate Decal	1
4	18-8950	Safety Instructions	1
5	17-9290	Upper Handle	1
6	17-9300	Escutcheon Plate	1
7	32104-76	Screw	4
8	32146-5	Handle Nut	2

Ref. No.	Part No.	Description	No. Used
9	17-9410	Handle Screw	2
10	*17-9380	Handle Pin	2
11	*32146-8	Locknut	2
12	17-9360	Lower Handle	1
13	218-466	Control Wire Clip	1
14	12-2320	Bag Attachment	1
15	5-8679	Grass Bag (Incl. Ref. 16)	1
16	3-2781	Bag Cord Fastener	1
	20-3260	Loose Parts Assembly	

*Replacement Parts Only

ENGINE TECUMSEH MODEL LAV40-50329C

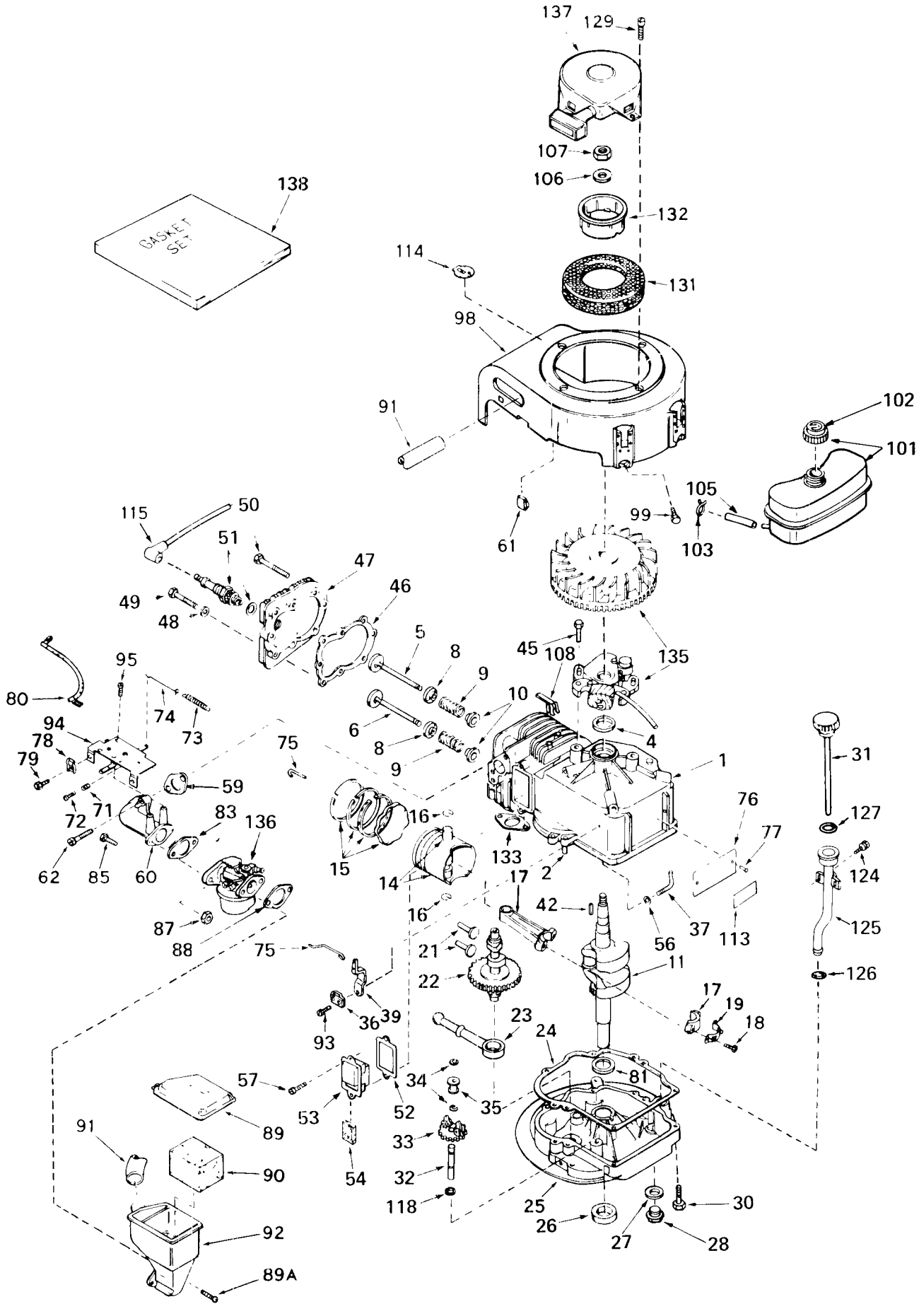

ENGINE TECUMSEH MODEL LAV40-50329C

Ref. No.	Part No.	Description	No. Used
1	33824	Cylinder Assy. (Incl. Nos. 2 & 4)	1
2	26727	Pin, Dowel	2
4	32600	Seal, Oil	1
5	29314A	Valve, Intake (Standard) (Incl. Nos. 8, 9 & 10)	1
5	29315B	Valve, Intake (1/32" oversize) (Incl. 8, 9 & 10)	1
6	29313B	Valve, Exhaust (Standard) (Incl. Nos. 8, 9 & 10)	1
6	29315B	Valve, Exhaust (1/32" Oversize) (Incl. Nos. 8, 9 & 10)	1
8	31671	Cap, Upper Valve Spring	2
9	31672	Spring Valve	2
10	31673	Cap, Lower Valve Spring	2
11	32887A	Crankshaft	1
14	32603	Piston & Pin Assy. (Incl. 2 of No. 16) (Standard)	1
14	32604	Piston & Pin Assy. (Incl. 2 of No. 16) (.010 Oversize)	1
14	32605	Piston & Pin Assy. (Incl. 2 of No. 16) (.020 Oversize)	1
15	32606	Ring Set, Piston (Standard)	1
15	32607	Ring Set, Piston (.010 Oversize)	1
15	32608	Ring Set, Piston (.020 Oversize)	1
16	20381	Ring, Piston Pin Retaining	2
17	32875	Rod Assy., Connecting (Incl. Nos. 18 & 19)	1
18	32610	Bolt, Connecting Rod	2
19	32609	Plate, Lock	1
21	27241	Lifter, Valve	2
22	33148A	Camshaft (Compression Release)	1
23	29914	Pump Assy., Oil	1
24	*26750A	Gasket, Mounting Flange	1
25	33825	Flange Assy., Mounting (Incl. Nos. 26, 27, 28 & 32)	1
26	27897	Seal, Oil	1
27	*28833	Gasket, Oil Drain Plug	1
28	27244	Plug, Oil Drain	1
30	650488	Screw, Hex Hd. Sems	6
31	30140	Dipstick, Oil (Incl. No. 127)	1
32	30574	Shaft, Mechanical Governor	1
33	30591	Gear Assy., Governor (Incl. No. 118)	1
34	29193	Ring, Retaining	2
35	30588A	Spool, Governor	1
36	31335	Clamp, Governor Lever	1
37	30589	Rod, Governor (Incl. No. 56)	1
39	32651	Lever, Governor	1
42	27247	Key, Flywheel	1
45	650489	Screw, Hex Hd. Sems with Flatwasher	2
46	*33015	Gasket, Cylinder Head	1
47	33016	Head, Cylinder	1
48	26073	Washer	8
49	6021	Screw, Hex Hd. Cap	5
50	650694	Screw, Hex Hd. Cap	3
51	33636	Plug, Spark (Champion J-8 or Equivalent)	1
52	*31619	Gasket, Valve Spring Cover	1
53	31337	Body Assy., Breather (Incl. Nos. 52 & 54)	1
54	31410	Element, Breather	1
56	28277	Washer, Flat	1
57	650128	Screw, Fil. slotted head Sems	2
59	*30188	Gasket, Intake	1
60	33004	Pipe, Intake	1
61	27275	Clip, Lead Wire	1
62	650451	Screw, Fil. Flex Head, Sems	2
71	31342	Spring	1
72	650549	Screw, Fil. Slotted Hd., Mach	1
73	31386	Spring, Governor	1
74	32653	Link, Governor Spring	1
75	33133	Link, Governor-to-Throttle	1
76	31345	Plate, Identification	1
77	28670	Screw, Drive	2
78	27793	Clip, Conduit	1
79	28942	Screw, Hex Slotted Hd., Sems	1
80	31388	Wire, Ground	1
81	32323	Washer, Thrust	1
83	*26756	Gasket, Carburetor	1
85	6202	Screw, Hex Hd. Cap	2
87	29752	Nut, Hex, w/Washer	2
88	*33051	Gasket, Air Cleaner	1
89	33007	Cover, Air Cleaner	1
89A	650707	Screw, Fil. Hd. Sems	2
90	33006	Element, Air Cleaner	1
91	33008	Tube, Air Cleaner	1
92	33005	Body, Air Cleaner	1
93	650548	Screw, Hex Slotted Washer Hd.	1
94	33131	Control Assy., Speed (Incl Nos. 71 & 72)	1
95	30200	Screw, Slotted Hex Hd.	2
98	32455B	Housing, Blower	1
99	650561	Screw, Phil. Hex Hd. Sems	2
101	32671	Tank Assy., Fuel (Incl. No. 102)	1
102	410144B	Cap, Fuel Tank	1
103	26460	Clamp, Fuel Line	1
105	29774	Line, Fuel	1
106	650490	Washer, Belleville	1
107	650607	Nut, Flywheel	1
108	29443	Clip	1
113	31865	Decal, Name & Instruction	1
114	31328	Decal, Name & H.P.	1
115	610118	Cover, Spark Plug	1
118	30590A	Washer, Flat	1
124	650562	Screw, Hex Slotted Hd. Sems	2
125	32750	Tube Assy., Oil Filler	1
126	30139	"O" Ring	1
127	29985	"O" Ring	1
129	29716	Screw, Pan P.C.R. Hd., Sems	4
131	590417	Screen, Starter Cup	1
132	590416	Cup, Starter	1
133	*30081	Gasket, Exhaust	1
135	610755	Magneto	1
136	631699	Carburetor	1
137	590420	Starter, Rewind	1
138	33238	Gasket Set (Incl. Items Marked *)	1

*Included in Gasket Set, Part No. 33238

NOTE: In original production the starter is riveted to the blower housing. If either the starter or blower housing requires replacement, both will have to be ordered. Also order 4 screws illustrated to attach replacement starter to replacement blower housing.

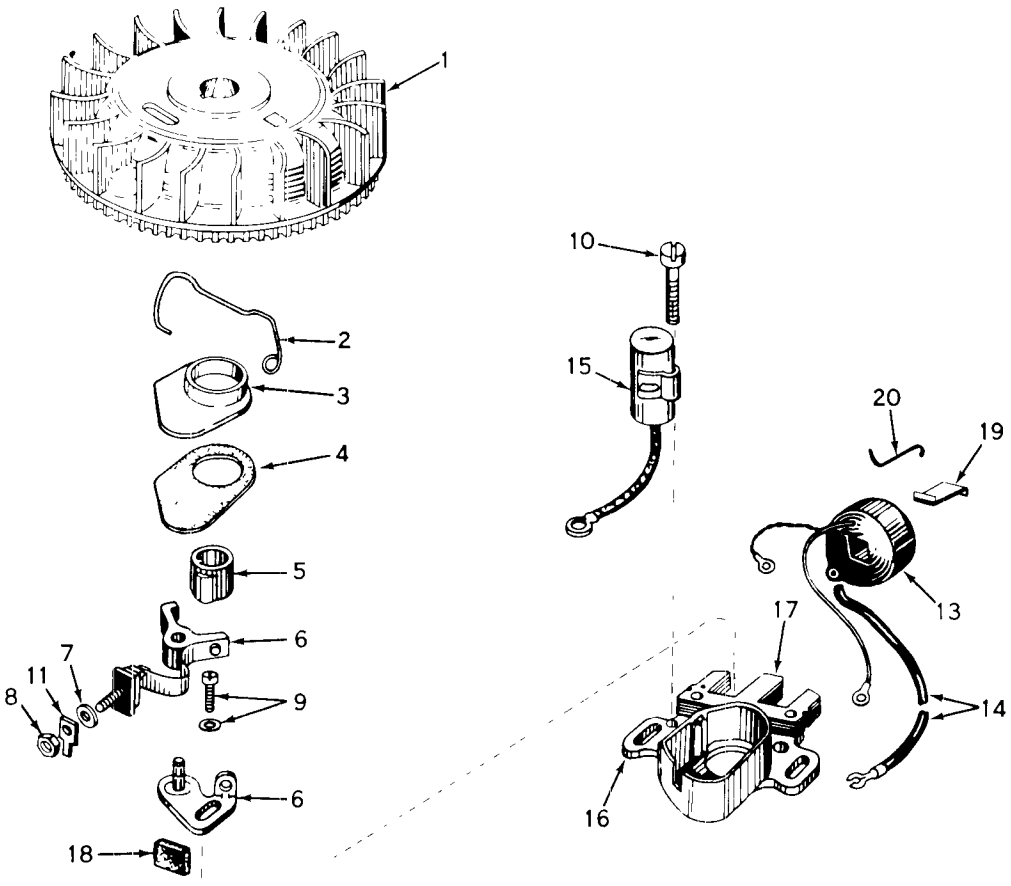

MAGNETO NO. 610755

Ref. No.	Part No.	Description	No. Used
1	32517	Flywheel	1
2	30551	Spring, Breaker Box Dust Cover	1
3	30550	Cover, Breaker Box Dust	1
4	32052	Gasket, Dust Cover	1
5	30992	Cam, Breaker	1
6	30547A	Breaker Assembly	1
7	610385	Washer, Terminal	1
8	610408	Nut, Terminal	1
9	29181	Screw & Washer Assy., Breaker	1
10	610593	Screw, Condenser Fastening	1

Ref. No.	Part No.	Description	No. Used
11	30843	Tab, Ground Terminal	1
13	30560A	Coil Assy. (Incl. Ref. No. 14)	1
14	30554	Wire, Ignition Lead	1
15	30548A	Condenser	1
16	30545	Core and Plate Group	1
17	30561A	Stator Assembly	1
18	30549	Felt, Cam Wiper	1
19	29629	Spring, Coil Wedge	1
20	31311	Clip, Coil Locking	1

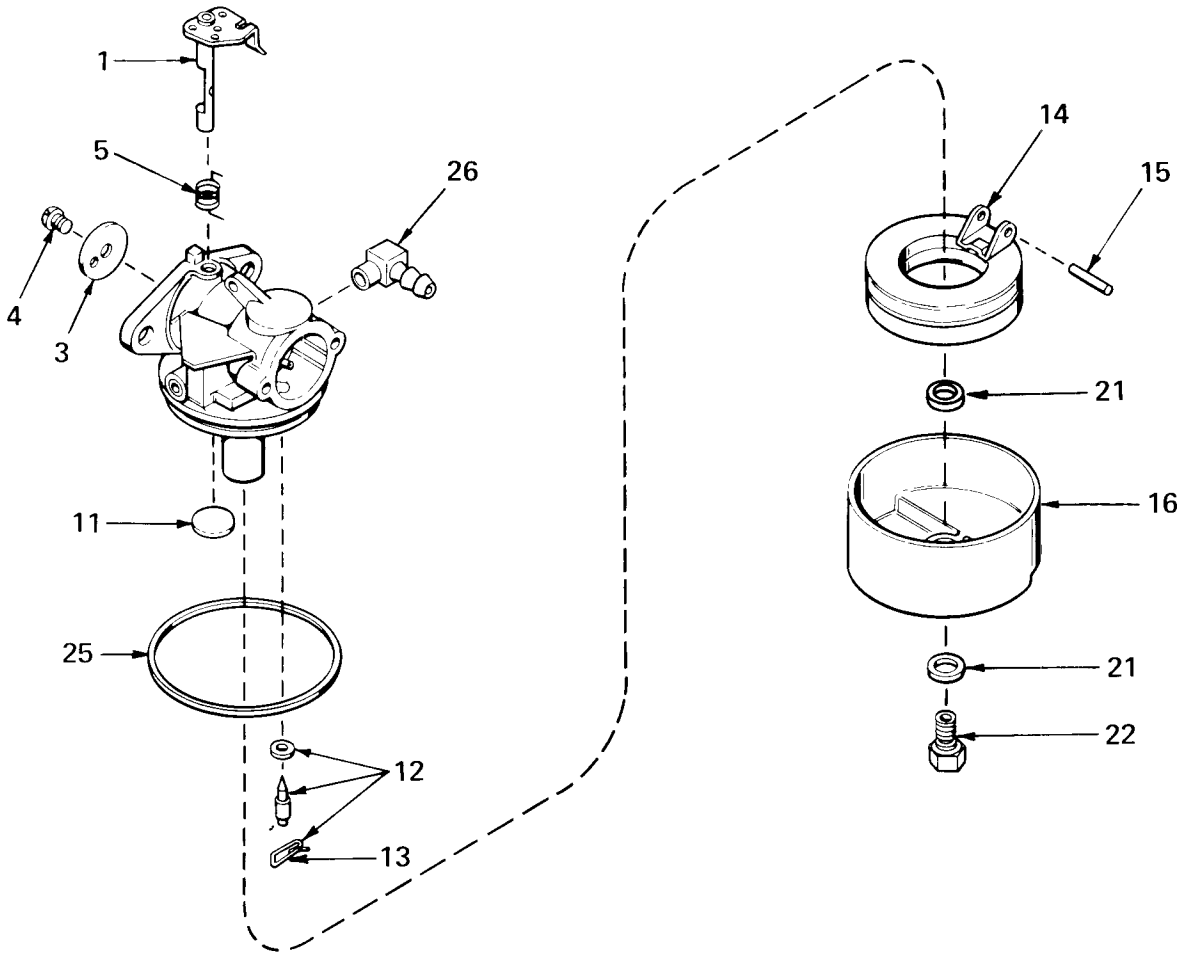

CARBURETOR NO. 631699

Ref. No.	Part No.	Description	No. Used
1	631615	Shaft & Lever Assy., Throttle	1
3	631616	Shutter, Throttle	1
4	650506	Screw	1
5	630731	Spring, Return	1
11	631027	Plug, Welch	1
12	631021	Inlet Needle, Seat & Clip Assy. (Incl. No. 13)	1
13	631022	Clip, Inlet Needle	1

Ref. No.	Part No.	Description	No. Used
14	631023	Float, Carburetor	1
15	631024	Shaft, Float	1
16	631700	Bowl Float	1
21	631334	Gasket, Bowl-to-Body	2
22	631617	Nut, Float Bowl	1
25	631028	Gasket, Bowl-to-Body	1
26	631038	Fitting, Fuel Inlet	1

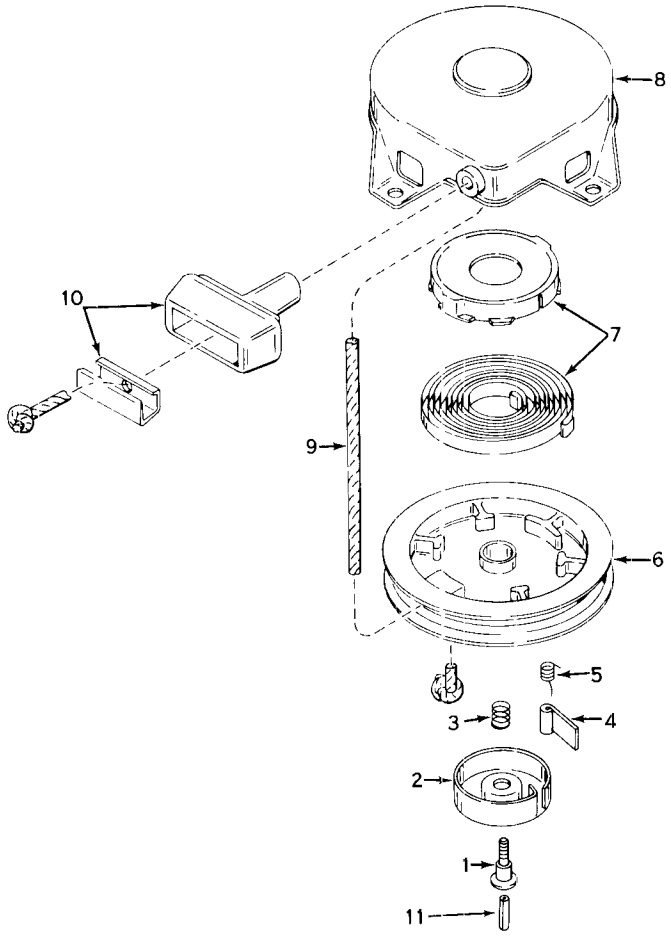

REWIND STARTER NO. 590420

Ref. No.	Part No.	Description	No. Used
1	590409	Screw, Retainer	1
2	590410	Retainer, R.H.	1
3	590411	Spring, Brake	1
4	590148	Dog, Starter	1
5	590412	Spring, R.H. Dog	1
6	590413A	Pulley	1

Ref. No.	Part No.	Description	No. Used
7	590414	Spring & Keeper Assy.	1
8	590415	Housing Assy., Starter	1
9	590386	Rope, Starter	1
10	590387	Handle Assy., Starter	1
11	590459	Pin, Centering	1

PRODUCT CHANGES

In an effort to make improvements available to TORO owners as quickly as possible, minor changes are incorporated into Toro's products from time to time that do not become immediately shown in the Parts Catalog. If such a change apparently has been made in your unit, which is not reflected in your manual, see your TORO distributor or his Authorized TORO Service Dealer for information and part numbers.

IMPORTANT ORDERING INSTRUCTIONS

Repair parts are available from your Authorized TORO Service Dealer. To insure getting correct parts without delay, furnish the following information:

1. Serial number of your mower as shown on the name plate.
2. Part number, description, and quantity of each part required.
3. State whether parts should be shipped by mail or express. All repair parts are shipped F.O.B. Factory.
4. Name and address where parts are to be shipped.
5. Do not order by reference number; use part number only.

THE TORO PROMISE

It is Toro's policy to design and produce TORO products to provide our customers with a high level of performance and durability in normal operation. Our products, however, are produced in high volume, and it is inevitable that occasionally a unit will reach a customer with a defect in materials or workmanship which causes that unit to fall below the normal high level of TORO performance. Invariably, such a defect will be noticed in a residential product within one year, and in an institutional product within ninety days after purchase. Recognizing this possibility, Toro has established a simple guarantee policy and procedure that is intended to assure customer satisfaction. This guarantee statement is as follows:

The Toro Promise

The Toro Company promises to repair any TORO product for the original purchaser if defective in materials or workmanship. The following time periods from the date of purchase apply

Residential products	1 year
Residential products used commercially	45 days
Institutional products	90 days

The costs of parts and labor are included, but the customer pays the transportation costs. Just return any residential product to an Authorized TORO Service Dealer, or any institutional product to a TORO distributor.

Should you feel that a product is defective, and wish to rely on The Toro Promise, the following procedure is recommended:

1. Contact any TORO dealer or distributor, but preferably the dealer or distributor from whom you purchased the product.
2. He will instruct you to either return the product to him, or tell you the name and address of your nearest Authorized TORO Service Dealer if the product is to be returned to such dealer.
3. Take the product and your original sales slip, or other evidence of purchase date, to the servicing dealer.
4. The servicing dealer will inspect the unit, advise you whether the product is defective and, if so, make all repairs necessary to correct the defect without extra charge to you.

If for any reason you are dissatisfied with the dealer's analysis of the defect or the service he performs, we urge you to contact us. Write:

TORO "Customer Care" Department
8111 Lyndale Avenue South
Bloomington, Minnesota 55420

MAINTENANCE RECORD

Date	Hours Used	Oil Change	Air Cleaner Service	Lubrication	Winter Storage	Spring Service	Spark Plug Gap

MAINTENANCE RECORD

Date	Hours Used	Oil Change	Air Cleaner Service	Lubrication	Winter Storage	Spring Service	Spark Plug Gap

MAINTENANCE RECORD

Date	Hours Used	Oil Change	Air Cleaner Service	Lubrication	Winter Storage	Spring Service	Spark Plug Gap