Form No. 3436-995 Rev B

TORO®

Count on it.

Parts Catalog

# 52in (7 GPM) Sprayer

## Spray Master Max

**Model No. 34237—Serial No. 400000000 and Up**

Register at www.Toro.com.
Original Instructions (EN)

*3436-995* B

# Ordering Replacement Parts

To order replacement parts, please supply the part number, the quantity, and the description of each part desired.

### Understanding Reference Numbers

Each identified part in an illustration has a reference number. The reference number for a part also appears in the parts list, along with other information about the part.

This catalog uses two special reference number formats, one to indicate parts in a service assembly and another to indicate the quantity of a given part in an illustration.

### Service Assembly Reference Numbers

Parts in service assemblies have reference numbers in the form a:b. The a represents the reference number of the entire service assembly and the b represents a sequential number unique to each part within the service assembly.

For example, a wheel assembly might be identified by reference number 6, the tire by 6:1, the valve by 6:2, and the wheel by 6:3. When you order the assembly identified by reference number 6, you receive all parts identified by reference numbers 6:1,6:2, and 6:3. However, you may also order any part individually. Reference numbers of this type appear in illustration and in parts lists.

### Reference Numbers Indicating Quantity

In an illustration, if a reference number indicates more than one part, the reference number has the form nX y. The n represents the quantity of the part, the X is the multiplication symbol, and the y represents the reference number.

For example, in an illustration, the reference number 2X 37 means that two of the parts identified by reference number 37 are indicated.

# Contents

Main Frame Assembly . . . . . 4
Engine Assembly . . . . . 6
Hydraulic Assembly . . . . . 8
Park Brake Assembly . . . . . 10
Electrical Assembly . . . . . 12
Motion Control Assembly . . . . . 14
Tire and Wheel Assembly . . . . . 16
Fuel Assembly . . . . . 18
Fuel Tank Assembly No. 140-4343 . . . . . 20
Spray System Assembly . . . . . 22
Tank Hose Reel Assembly . . . . . 24
Reel Hose Assembly . . . . . 26
Manifold Assembly . . . . . 28
Spray Boom Assembly . . . . . 30
Liquid Valve Assembly . . . . . 32
Hopper Assembly . . . . . 34
Attachments and Accessories . . . . . 36

**© 2020—The Toro® Company**
**8111 Lyndale Avenue South**
**Bloomington, MN 55420**



**Contact us at www.Toro.com.**
**Printed in the USA.**
**All Rights Reserved**

# Main Frame Assembly

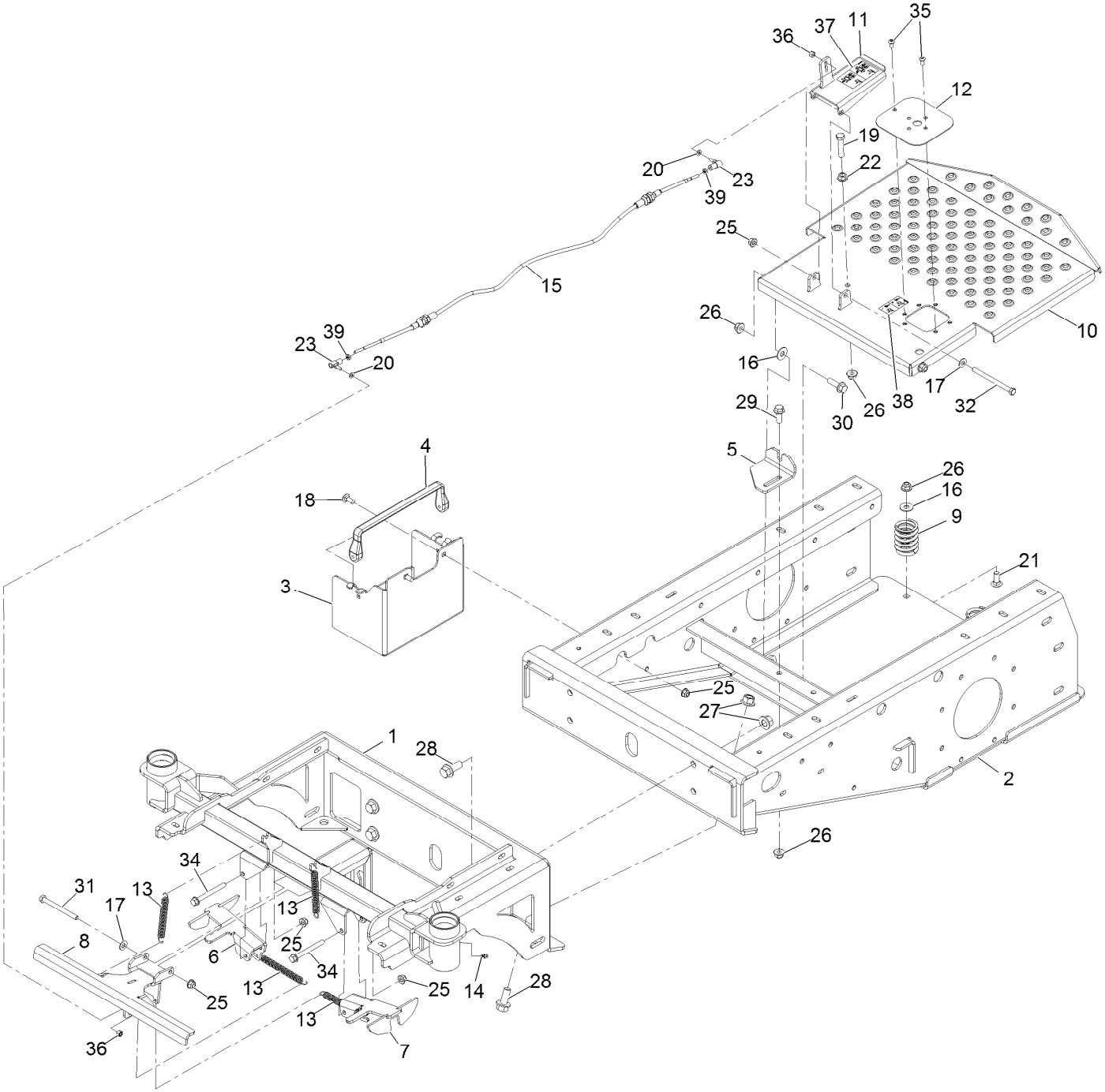

# Main Frame Assembly (continued)

| Ref. | Part Number | Qty. | Description |
|---|---|---|---|
| 1 | 135-5179 | 1 | Frame-Front |
| 2 | 135-5171 | 1 | Frame-Rear |
| 3 | 142-3038 | 1 | Box-Battery |
| 4 | 142-1748 | 1 | Strap, Tarp |
| 5 | 135-5494 | 1 | Bracket-Cable, Lower |
| 6 | 135-5195 | 1 | Wing-Capture, Rt |
| 7 | 135-5194 | 1 | Wing-Capture, Lt |
| 8 | 135-5369 | 1 | Capture-Lcs |
| 9 | 135-5654 | 3 | Spring-Compression |
| 10 | 135-7502 | 1 | Plate-Foot |
| 11 | 135-5191 | 1 | Pedal-Foot |
| 12 | 135-5561 | 1 | Panel-Switch, Foot |
| 13 | 135-5652 | 4 | Spring-Extension |
| 14 | 302-63 | 2 | Zerk |
| 15 | 135-5644 | 1 | Cable-Caster, Locking |
| 16 | 1126 | 5 | Washer-Flat |
| 17 | 107-0279 | 2 | Washer |
| 18 | 126-0695 | 2 | Screw-Carriage 5/16-18 X 3/4 SS |
| 19 | 126-0710 | 1 | Screw-HHF 3/8-16 X 1.75 SS |
| 20 | 126-0759 | 2 | Washer-Flat |
| 21 | 126-0980 | 3 | Bolt-Carriage 3/8-16 X 1 SS |
| 22 | 135-6806 | 1 | Nut-Hex Flange 3/8-16 Serrated SS |
| 23 | 135-5682 | 2 | Ball Joint-SS |
| 25 | 135-6109 | 6 | Nut-Hex Flg 5/16-18 Nyloc SS |
| 26 | 135-6110 | 7 | Nut-Hex Flg 3/8-16 SS W/Patch SS |
| 27 | 135-6111 | 6 | Nut-Hex Flg 3/8-16 SS W/Patch SS |
| 28 | 135-6207 | 6 | Screw-HHF 5/16-18 X 1 1/4 SS |
| 29 | 135-6208 | 1 | Screw-HHF 3/8-16 X 1 Serrated SS |
| 30 | 135-6211 | 2 | Screw-HHF 3/8-16 X 1 1/4 Serrated SS |
| 31 | 135-6217 | 1 | Screw-HH 5/16-18 X 3 1/2 SS |
| 32 | 135-6218 | 1 | Screw-HH 5/16-18 X 4 SS |
| 34 | 135-6222 | 2 | Screw-HHF 5/16-18 X 3 Serrated SS |
| 35 | 135-6367 | 2 | Screw-Button Head 1/4-20 X 1/2 SS |
| 36 | HDW05856 | 2 | Nut-Hex Nyl Ins #10-32 Unf |
| 37 | 135-6430 | 1 | Decal-Lock, Caster |
| 38 | 135-6728 | 1 | Decal-Button, Foot (Spray) |
| 39 | 520-0019 | 2 | Nut-Hex Jam #10-32 Unf |

# Engine Assembly

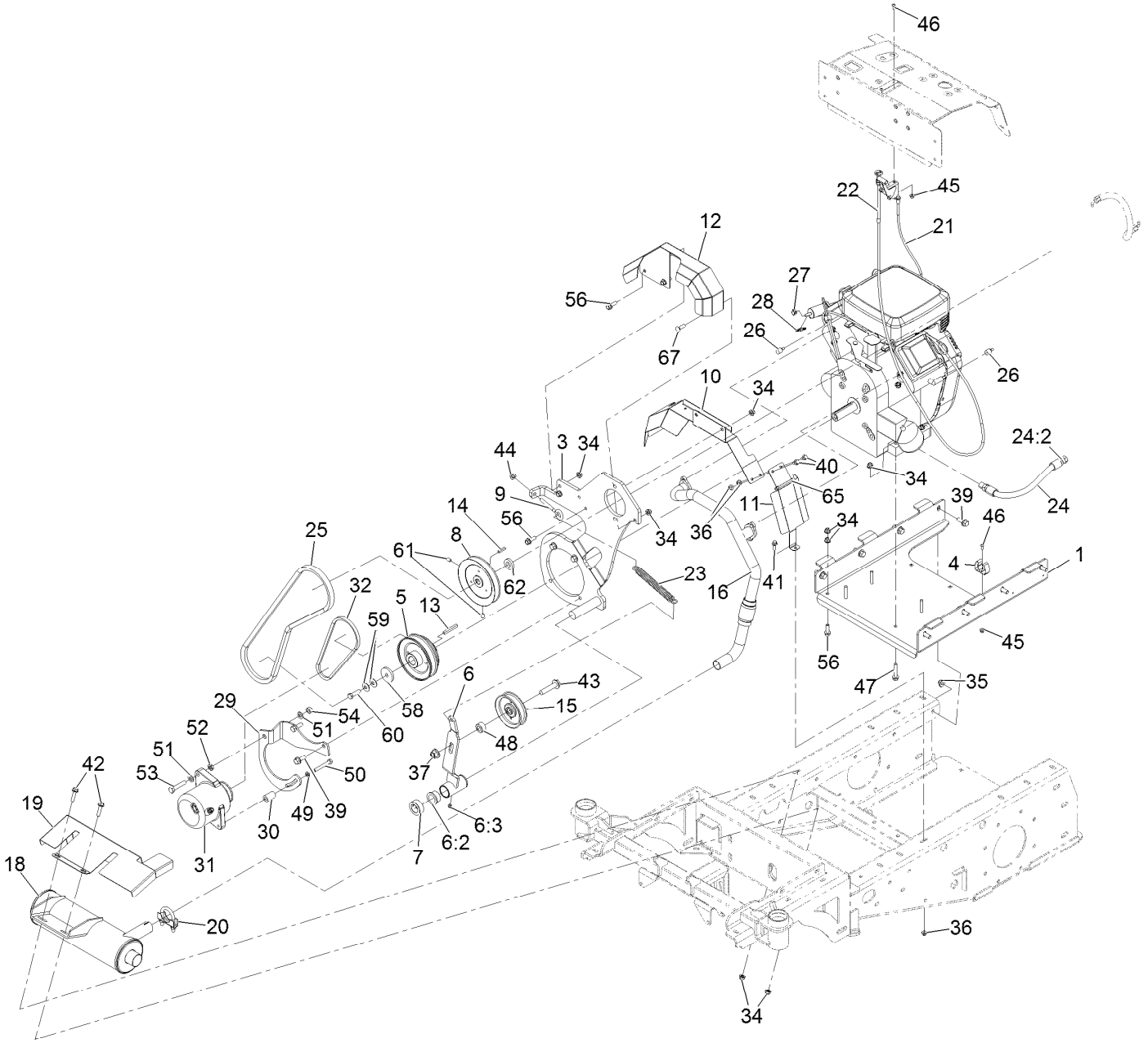

# Engine Assembly (continued)

| Ref. | Part Number | Qty. | Description |
|---|---|---|---|
| 1 | 135-5492 | 1 | Tray-Engine |
| 3 | 135-5453-03 | 1 | Bracket-Engine, Pump |
| 4 | 135-5661 | 1 | Holder-Tool, Clip |
| 5 | 135-6394 | 1 | Pulley-Double |
| 6 | 135-5669 | 1 | Tension Arm ASM |
| 6:2 | 256-132 | 2 | Bushing-Flange |
| 6:3 | 302-63 | 1 | Zerk |
| 7 | 135-5382 | 1 | Collar |
| 8 | 135-5663 | 1 | Pulley-Drive, Pump |
| 9 | 135-5667 | 1 | Bolt-Eye |
| 10 | 135-5565 | 1 | Guard-Muffler, Lower |
| 11 | 135-5566 | 1 | Guard-Muffler, Lower |
| 12 | 142-3320 | 1 | Guard-Pulley |
| 13 | 103-4177 | 1 | Key |
| 14 | 1-807272 | 1 | Key-5Mm X 5Mm X 25Mm |
| 15 | 135-5662 | 1 | Pulley-Idler, Flat |
| 16 | 135-7089 | 1 | Manifold-Exhaust |
| 18 | 135-7090 | 1 | Muffler |
| 19 | 135-5568 | 1 | Shield-Heat, Muffler |
| 20 | 2112-11 | 1 | Clamp-Muffler |
| 21 | 135-5260 | 1 | Cable-Throttle |
| 22 | 135-5707 | 1 | Cable-Choke |
| 23 | 135-5780 | 1 | Spring-Extension |
| 24 | 135-5365 | 1 | Oil Drain Hose ASM (W/Plug) |
| 24:2 | AU218-774 | 1 | Plug |
| 25 | 135-5664 | 1 | Belt-V |
| 26 | 135-5677 | 2 | Tube-Shrink, Heat |
| 27 | 2412-98 | 1 | Clamp-Hose |
| 28 | 120-1996 | 1 | Fitting-STR |
| 29 | 135-5929 | 1 | Bracket-Alternator |
| 30 | 135-5930 | 1 | Tube-Support, Alternator |
| 31 | 135-6057 | 1 | Alternator |
| 32 | 135-6613 | 1 | Belt-V, 3L240 |
| 34 | 135-6109 | 13 | Nut-Hex Flg 5/16-18 Nyloc SS |
| 35 | 135-6110 | 8 | Nut-Hex Flg 3/8-16 SS W/Patch SS |
| 36 | 135-6108 | 3 | Nut-Hex Flg 1/4-20 Nyloc SS |
| 37 | 99-5107 | 1 | Nut-Lock 1/2-13 |
| 39 | 135-6208 | 12 | Screw-HHF 3/8-16 X 1 Serrated SS |
| 40 | 135-6280 | 2 | Screw-HHF 1/4-20 X 1/2 Serrated SS |
| 41 | 135-6221 | 1 | Screw-HHF 1/4-20 X 3/4 Serrated SS |
| 42 | 135-6261 | 2 | Screw-HHF 5/16-18 X 1 1/4 Serrated SS |
| 43 | 3234-46 | 1 | Screw-HHF 1/2-13 X 2 1/4 |
| 44 | 104-8300 | 1 | Nut-Nyloc 5/16-18 Flg |
| 45 | 135-6342 | 3 | Nut-Hex Flg #10-24 Nyloc SS |
| 46 | 135-6374 | 3 | Screw-Button Head #10-24 X 1/2 SS |
| 47 | 135-5779 | 4 | Screw-HHF 5/16-18 X 1 3/4 Serrated SS |
| 48 | 116-2959 | 1 | Spacer |
| 49 | 3253-4 | 1 | Washer-Lock 5/16 |
| 50 | 120-9642 | 1 | Screw-HH |
| 51 | 33095-00 | 2 | Washer-Flat |
| 52 | 110-9346 | 1 | Nut-Jam M10 Thin |
| 53 | 33115-050 | 1 | Screw-HH M10-1.5 X 50Mm |
| 54 | 33025-00 | 1 | Nut-Lock, NI |
| 56 | 135-6272 | 5 | Screw-HHF 5/16-18 X 1 Serrated SS |
| 58 | 110-9981 | 1 | Washer-Plain |
| 59 | 3290-340 | 2 | Washer-Belleville |
| 60 | 3211-5 | 1 | Screw-HH 3/8-24 X 1 1/4 |
| 61 | 3246-17 | 2 | Screw-Set 5/16-24 X 1/2 |
| 62 | 1-323539 | 1 | Spacer-Blade Drive |
| 65 | 3290-378 | 1 | Tie-Cable |
| 67 | HDW17294 | 1 | Bolt-Carriage 5/16-18 X 1 SS |

# Hydraulic Assembly

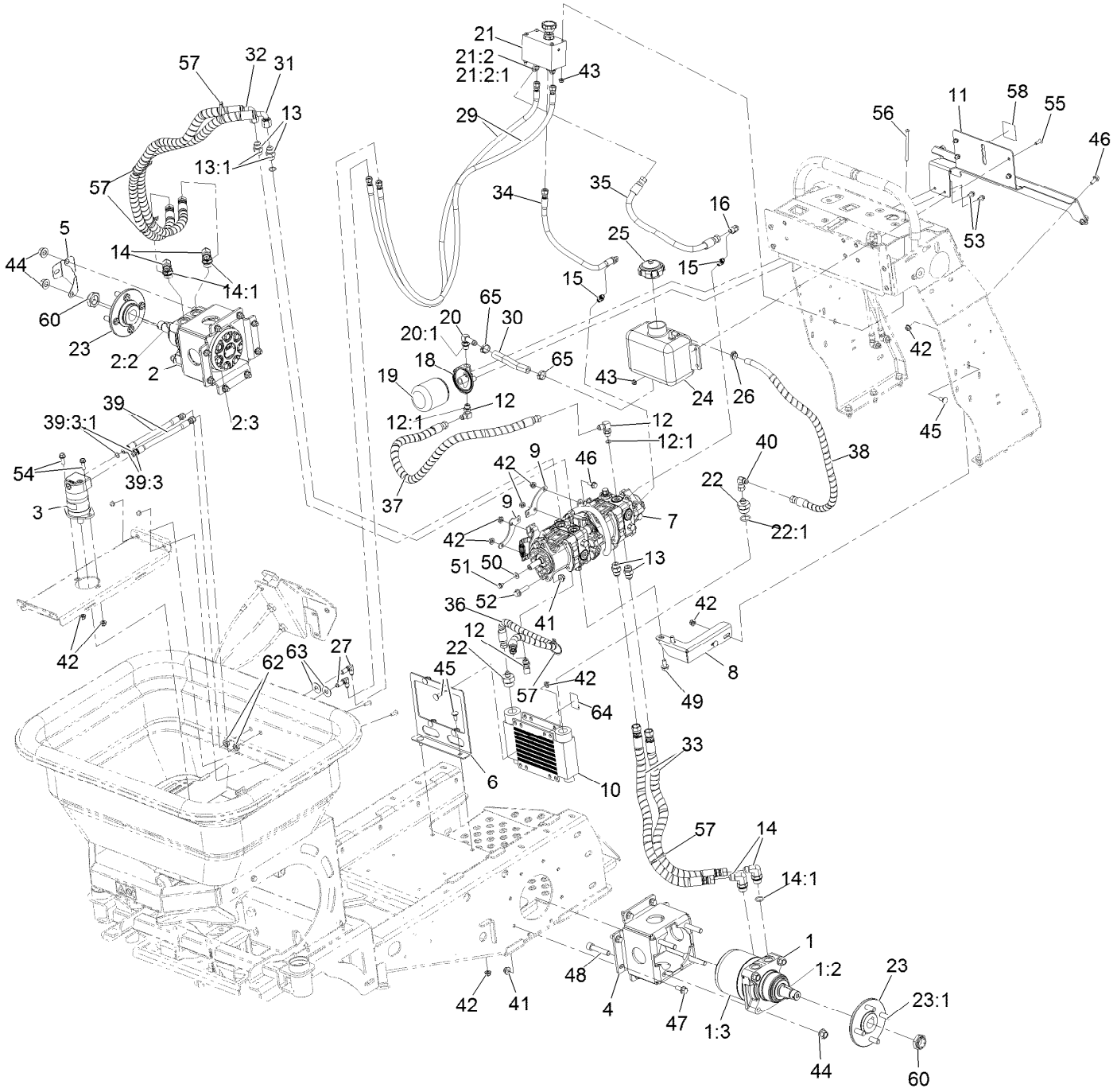

# Hydraulic Assembly (continued)

| Ref. | Part Number | Qty. | Description |
|---|---|---|---|
| 1 | 135-5230 | 1 | Motor-Wheel, LH |
| 1:2 | 3257-42 | 1 | Key-Woodruff |
| 1:3 | 103-6994 | 1 | Seal Kit |
| 2 | 135-5231 | 1 | Motor-Wheel, RH |
| 2:2 | 3257-42 | 1 | Key-Woodruff |
| 2:3 | 103-6994 | 1 | Seal Kit |
| 3 | 135-5243 | 1 | Motor-Hydraulic, Spreader |
| 4 | 135-5448-03 | 2 | Mount-Motor, Wheel [black] |
| 5 | 135-5574 | 1 | Bracket-Hopper, Speedometer Sensor |
| 6 | 135-6483 | 1 | Mount-Cooler |
| 7 | 135-5665 | 1 | Pump-Tandem |
| 8 | 135-5551 | 1 | Bracket-Support, Hydro Pump |
| 9 | 135-5558 | 2 | Extension-Pump, Hydro |
| 10 | 135-5679 | 1 | Cooler-Oil |
| 11 | 135-5550 | 1 | Mount-Tank And Filter, Hydraulic |
| 12 | 103-1802 | 3 | Fitting-Elbow, 90 DEG |
| 12:1 | 237-42 | 1 | O-Ring |
| 13 | 353-388 | 4 | Fitting-Straight |
| 13:1 | 237-79 | 1 | O-Ring |
| 14 | 353-426 | 4 | Fitting-90 DEG |
| 14:1 | 237-80 | 1 | O-Ring |
| 15 | 353-545 | 2 | Fitting-Straight |
| 16 | 135-5680 | 1 | Fitting-Swivel, 90 DEG |
| 18 | 104-7836 | 1 | Head-Filter |
| 19 | 114-3494 | 1 | Element-Filter, 25 Micron |
| 20 | 109-6449 | 1 | Fitting-Elbow, 90 |
| 20:1 | 237-42 | 1 | O-Ring |
| 21 | 135-5256 | 1 | Manifold-Hopper, W/Out Relief |
| 21:2 | 353-212 | 1 | Fitting-Elbow, 45 DEG |
| 21:2:1 | 237-42 | 1 | O-Ring |
| 22 | AU218-5044 | 2 | Adapter-Straight |
| 22:1 | 237-81 | 1 | O-Ring |
| 23 | 135-7525 | 2 | Hub-Wheel |
| 23:1 | 135-7526 | 4 | Stud-1/2-20 X 1.55 |
| 24 | 135-5712 | 1 | Tank-Hydraulic, Plastic |
| 25 | 135-5713 | 1 | Cap-Vented |
| 26 | 135-5757 | 1 | Clamp-Oetiker, 167 |
| 27 | 135-5796 | 2 | Fitting-Elbow, 90 |
| 29 | 142-3111 | 2 | Hose ASM, HYD HP |
| 30 | 109-5577 | 1 | Hose-Hydraulic |
| 31 | 142-3115 | 1 | Hose ASM-HYD HP |
| 32 | 142-3116 | 1 | Hose ASM-HYD HP |
| 33 | 142-3114 | 2 | Hose ASM-HYD HP |
| 34 | 142-3113 | 1 | Hose ASM-HYD HP |
| 35 | 135-5361 | 1 | Hose ASM, HYD LP |
| 36 | 135-5384 | 1 | Hose ASM, HYD LP |
| 37 | 135-5385 | 1 | Hose ASM, HYD LP |
| 38 | 135-5456 | 1 | Hose ASM, HYD LP |
| 39 | 142-3112 | 2 | Hose ASM-HYD HP |
| 39:3 | | 1 | Fitting-Straight, Rigid ● |
| 39:3:1 | 237-42 | 1 | O-Ring |
| 40 | AU218-980 | 1 | Fitting-Swivel, 90 DEG |
| 41 | 135-6110 | 18 | Nut-Hex Flange |
| 42 | 135-6109 | 18 | Nut-Hex Flange |
| 43 | 135-6108 | 8 | Nut-Hex Flange |
| 44 | 99-5107 | 8 | Nut-Lock |
| 45 | 126-0695 | 8 | Screw-CARR |
| 46 | 126-2712 | 8 | Screw-HHF |
| 47 | 135-6208 | 16 | Screw-HHF |
| 48 | 3274-71 | 8 | Screw-HSH |
| 49 | 135-6274 | 2 | Screw-HHF |
| 50 | 135-6273 | 1 | Washer |
| 51 | 81-1280 | 1 | Screw-HHF |
| 52 | 135-6278 | 2 | Screw-HHF |
| 53 | 135-6280 | 2 | Screw-HHF, 1/4-20 X 1/2, Ser Flg, SS |
| 54 | 135-6272 | 2 | Screw-HHF |
| 55 | 135-7080 | 4 | Screw-Hsbhf |
| 56 | 135-6385 | 4 | Screw-HSBH |
| 57 | 3290-378 | 6 | Tie-Cable |
| 58 | 135-6398 | 1 | Decal-Oil |
| 60 | 116-1399 | 2 | Locknut |
| 62 | 3220-4 | 2 | Nut-Jam |
| 63 | 135-5586 | 2 | Washer |
| 64 | 106-5517 | 1 | Decal-Warning |
| 65 | 135-5692 | 2 | Clamp-Oetiker, 167 |

● Not serviced separately

# Park Brake Assembly

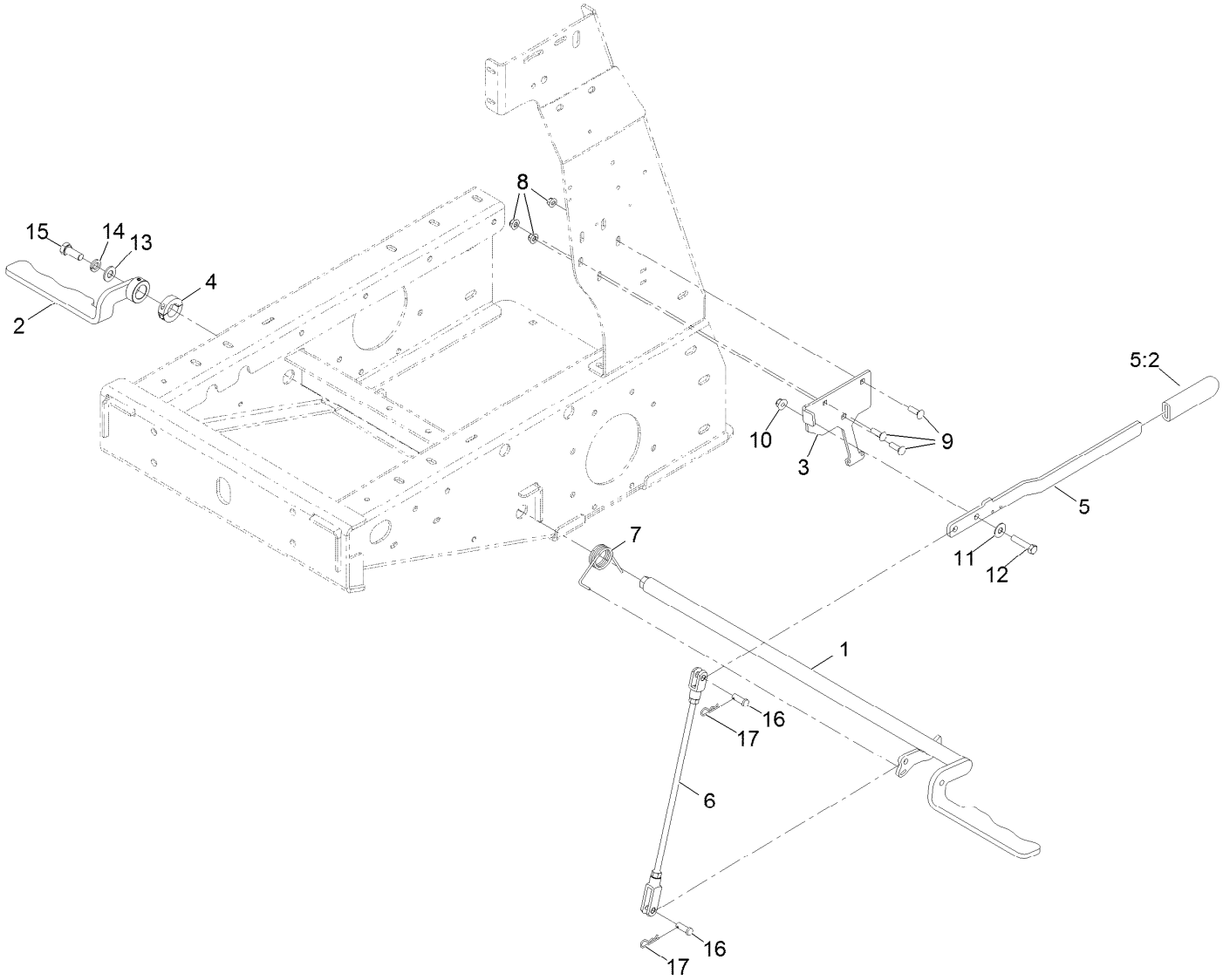

# Park Brake Assembly (continued)

| Ref. | Part Number | Qty. | Description |
|---|---|---|---|
| 1 | 135-5380-03 | 1 | Arm-Brake, Lt |
| 2 | 135-5376-03 | 1 | Arm-Brake, Rt |
| 3 | 135-5432 | 1 | Bracket-Handle, Brake |
| 4 | 116-7271 | 1 | Collar-Locking |
| 5 | 135-6059 | 1 | Brake Handle ASM |
| 5:2 | 1-633268 | 1 | Grip-Lever |
| 6 | 135-6066 | 1 | Brake Rod ASM |
| 7 | 135-6106 | 1 | Spring-Torsion |
| 8 | 135-6109 | 3 | Nut-Hex Flange |
| 9 | HDW17294 | 3 | Bolt,Carriage,5/16-18X1,ST/ST 18-8 |
| 10 | 104-8301 | 1 | Nut-HF, NI |
| 11 | 1126 | 1 | Washer-Flat |
| 12 | 323-52 | 1 | Screw-HH |
| 13 | 3256-26 | 1 | Washer-Flat |
| 14 | 3253-7 | 1 | Washer-Lock |
| 15 | 106-0378 | 1 | Screw |
| 16 | 1-808284 | 2 | Pin-Clevis |
| 17 | 135-6284 | 2 | Pin-Hair |

# Electrical Assembly

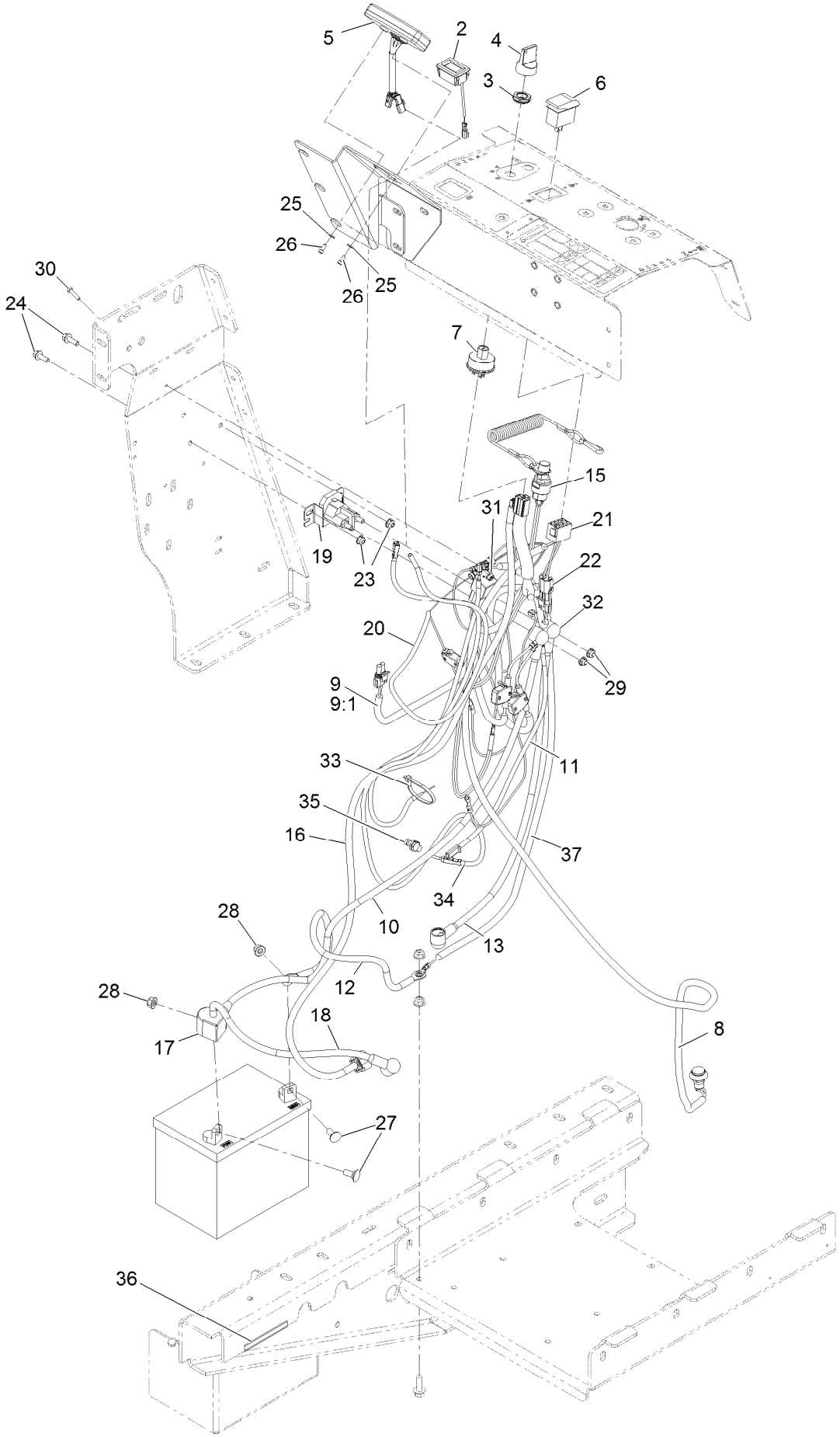

# Electrical Assembly (continued)

| Ref. | Part Number | Qty. | Description |
|---|---|---|---|
| 2 | 135-5259 | 1 | Meter-Tach/Hour |
| 3 | 135-5715 | 1 | Nut-Switch, Key |
| 4 | 1-603511 | 1 | Key-Ignition |
| 4 | 135-5708 | 1 | Key-Umbrella |
| 5 | 135-8900 | 1 | Striker-Head Only |
| 6 | 100-8469 | 1 | Switch-Rocker |
| 7 | 135-6052 | 1 | Switch-Ignition |
| 8 | 135-6054 | 1 | Switch-Push Button |
| 9 | 135-6113 | 1 | Harness-Main |
| 9:1 | 135-6270 | 1 | Relay-Mini ISO Pwr, 5M |
| 10 | 135-6114 | 1 | Cable-Positive |
| 11 | 135-6115 | 1 | Wire-Solenoid |
| 12 | 135-6116 | 1 | Cable-Ground |
| 13 | 135-6117 | 1 | Cable-Positive |
| 15 | 135-6121 | 1 | Switch-Op |
| 16 | 135-6120 | 1 | Harness, Alternator |
| 17 | 135-2304 | 1 | Insulator-Battery |
| 18 | 135-6119 | 1 | Cable-Positive |
| 19 | 135-6189 | 1 | Solenoid-Starter |
| 20 | 135-6443 | 1 | Harness-Striker |
| 21 | 32160-008 | 1 | Connector-Carling, 8F |
| 22 | 32160-072 | 1 | Connector-Wp,2M |

| Ref. | Part Number | Qty. | Description |
|---|---|---|---|
| 23 | 135-6108 | 2 | Nut-Hex Flg 1/4-20 Nyloc SS |
| 24 | 135-6221 | 2 | Screw-HHF 1/4-20 X 3/4 Serrated SS |
| 25 | 126-0759 | 2 | Washer-Flat |
| 26 | 135-6357 | 2 | Screw-HSH M4-0.7 X 10Mm |
| 27 | 126-0695 | 2 | Screw-Carriage 5/16-18 X 3/4 SS |
| 28 | 135-6109 | 2 | Nut-Hex Flg 5/16-18 Nyloc SS |
| 29 | 104-7201 | 2 | Nut-Nyloc 1/4-20 Flg |
| 30 | 135-6356 | 1 | Screw-HH #10-24 X 3/4 SS |
| 31 | 135-6342 | 1 | Nut-Hex Flg #10-24 Nyloc SS |
| 32 | 1-543393 | 4 | Insulator-Solenoid |
| 33 | 3290-378 | 11 | Tie-Cable |
| 34 | 135-8898 | 1 | Cable-Sensor, Trail Tech |
| 35 | 135-8903 | 1 | Magnet-Speedometer |
| 36 | 135-7557 | 1 | Strip-Trim, 3.5" |
| 37 | 135-3998 | 1 | Harness-Wire, Jumper |
| 99 | 135-7317 | 1 | Manual-User, Striker ● |
| 99 | 135-7318 | 1 | Card-Striker, Quick Start ● |

● Not illustrated

# Motion Control Assembly

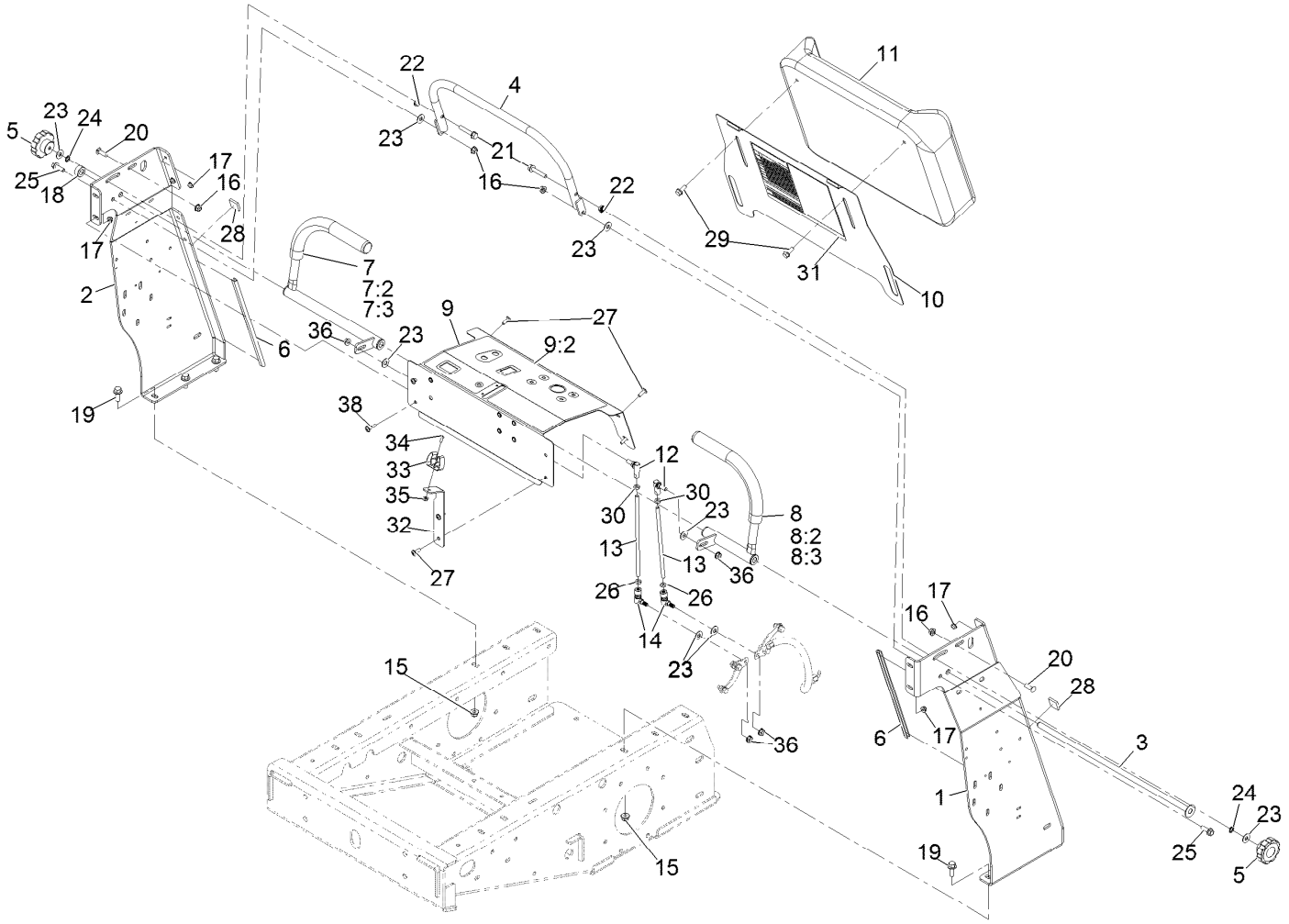

# Motion Control Assembly (continued)

| Ref. | Part Number | Qty. | Description |
|---|---|---|---|
| 1 | 135-5423-05 | 1 | Upright-Tower, Lt [blk-Txt] |
| 2 | 135-5425-05 | 1 | Upright-Tower, Rt [blk-Txt] |
| 3 | 135-5430 | 1 | Rod-Pivot, Joy Stick |
| 4 | 135-5427-05 | 1 | Bar-Speed [blk-Txt] |
| 5 | 135-5689 | 2 | Knob-Fluted |
| 6 | 135-5336 | 2 | Strip-Trim, 12.0 Inch |
| 7 | 135-5738 | 1 | Stick-Joy, Rt |
| 7:2 | 1-633257 | 1 | Grip-Control, Motion |
| 7:3 | 135-5694 | 2 | Bushing-Flange |
| 8 | 135-5739 | 1 | Stick-Joy, Lt |
| 8:2 | 1-633257 | 1 | Grip-Control, Motion |
| 8:3 | 135-5694 | 2 | Bushing-Flange |
| 9 | 142-3142 | 1 | ASM-Panel, Control |
| 9:2 | 135-6223 | 1 | Decal-Panel, Control |
| 10 | 135-5498-05 | 1 | Plate-Pad, Knee |
| 11 | 135-7884 | 1 | Pad-Knee |
| 12 | 135-5257 | 2 | Balljoint-SS |
| 13 | 135-5681 | 2 | Rod-Control, Motion |
| 14 | 135-5718 | 2 | Ball Joint-Quick Disconnect, SS |
| 15 | 135-6110 | 6 | Nut-Hex Flange |
| 16 | 135-6109 | 4 | Nut-Hex Flange |
| 17 | 135-6108 | 8 | Nut-Hex Flange |
| 18 | 135-6192 | 1 | Collar |
| 19 | 135-6208 | 6 | Screw-HHF |
| 20 | HDW17294 | 2 | Bolt,Carriage,5/16-18X1,ST/ST 18-8 |
| 21 | 135-5779 | 2 | Screw-HHF |
| 22 | 118-1722 | 2 | Nut-Hex Flange |
| 23 | HDW14535 | 8 | Flat Washer, 5/16 Nom,ST/ST,18-8 |
| 24 | 135-6286 | 2 | Washer-Lock |
| 25 | 135-6272 | 2 | Screw-HHF |
| 26 | 107-0282 | 2 | Nut-Hex |
| 27 | 135-7080 | 6 | Screw-Hsbhf |
| 28 | 93-9155 | 2 | Velcro |
| 29 | 126-2712 | 2 | Screw-HHF |
| 30 | 135-6512 | 2 | Nut-Hex |
| 31 | 142-3313 | 1 | Decal-Chart, Spray |
| 32 | 135-5506-05 | 1 | Mount-Gun |
| 33 | 135-5661 | 1 | Holder-Tool, Clip |
| 34 | 135-6374 | 1 | Screw-HSBH |
| 35 | 135-6342 | 1 | Nut-Hex Flange |
| 36 | 107-0380 | 4 | Nut-HHF |
| 38 | 135-7081 | 2 | Screw-Hsbhf |

# Tire and Wheel Assembly

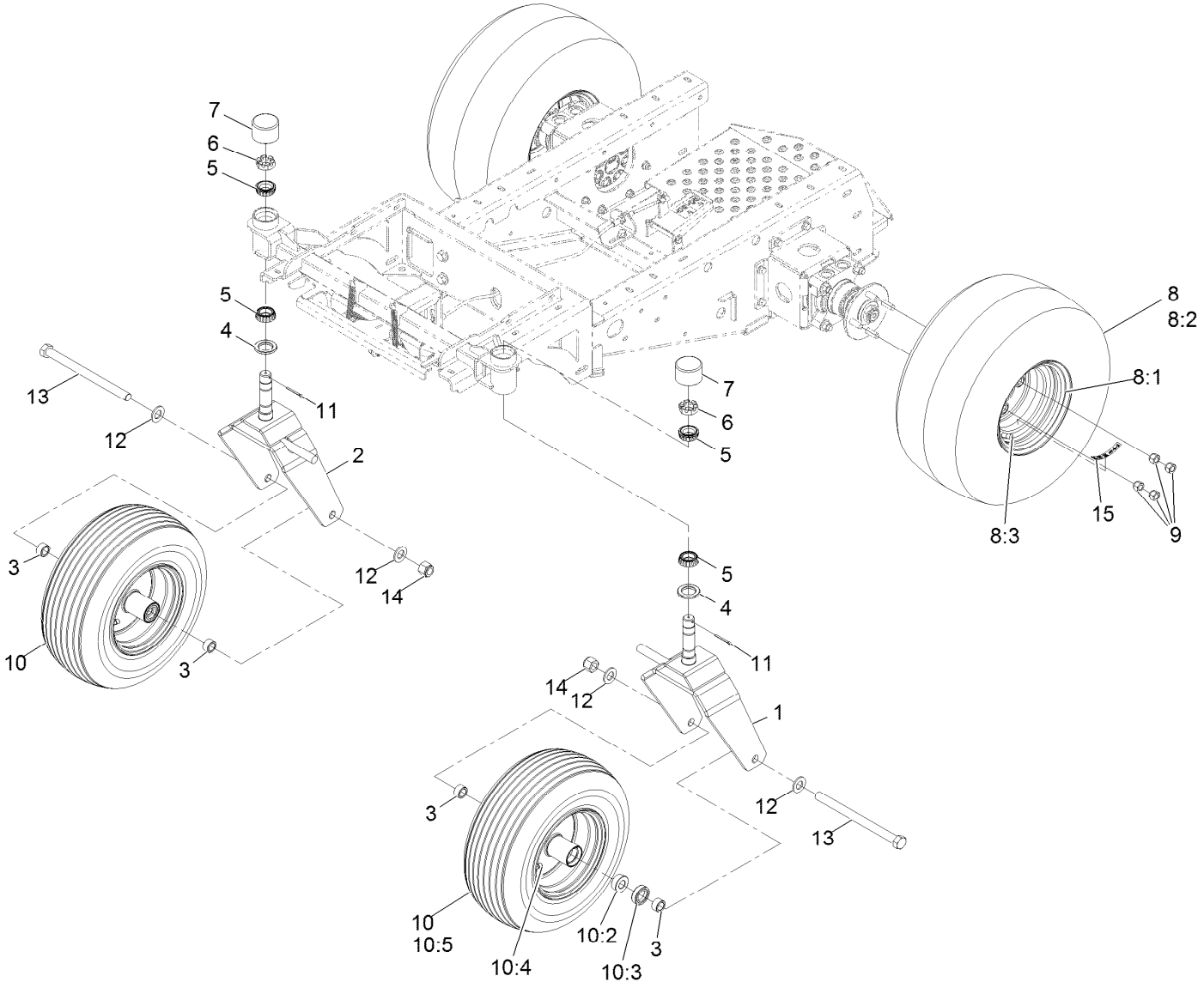

# Tire and Wheel Assembly (continued)

| Ref. | Part Number | Qty. | Description |
|---|---|---|---|
| 1 | 135-5441-05 | 1 | Caster-Lt [blk-Txt] |
| 2 | 135-5446-05 | 1 | Caster-Rt [blk-Txt] |
| 3 | 135-5683 | 4 | Spacer-Axle |
| 4 | 1-543511 | 2 | Seal-Grease |
| 5 | 254-92 | 4 | Cone-Bearing, Outer |
| 6 | 1-809082 | 2 | Nut-SHH |
| 7 | 135-5756 | 2 | Cap-Dust, Rubber |
| 8 | 135-5968 | 2 | Wheel And Tire ASM |
| 8:1 | 135-5969 | 1 | Rim-8 X 7, Black |
| 8:2 | 120-6466 | 1 | Tire |
| 8:3 | 232-27 | 1 | Stem-Valve |
| 9 | 242-50 | 8 | Nut-Lug |
| 10 | 135-5974 | 2 | Wheel And Tire ASM |
| 10:2 | 1-633585 | 2 | Bearing-Cone, Taper |
| 10:3 | 103-0063 | 2 | Seal-Caster |
| 10:4 | 5108 | 1 | Valve |
| 10:5 | 135-5976 | 1 | Tire-Rib |
| 11 | 135-6292 | 2 | Pin-Cotter |
| 12 | 3256-28 | 4 | Washer-Flat |
| 13 | 135-6300 | 2 | Screw-HH |
| 14 | 3296-51 | 2 | Nut-Lock, NI |
| 15 | 126-2055 | 2 | Decal-Torque, Wheel Hub Lug |

# Fuel Assembly

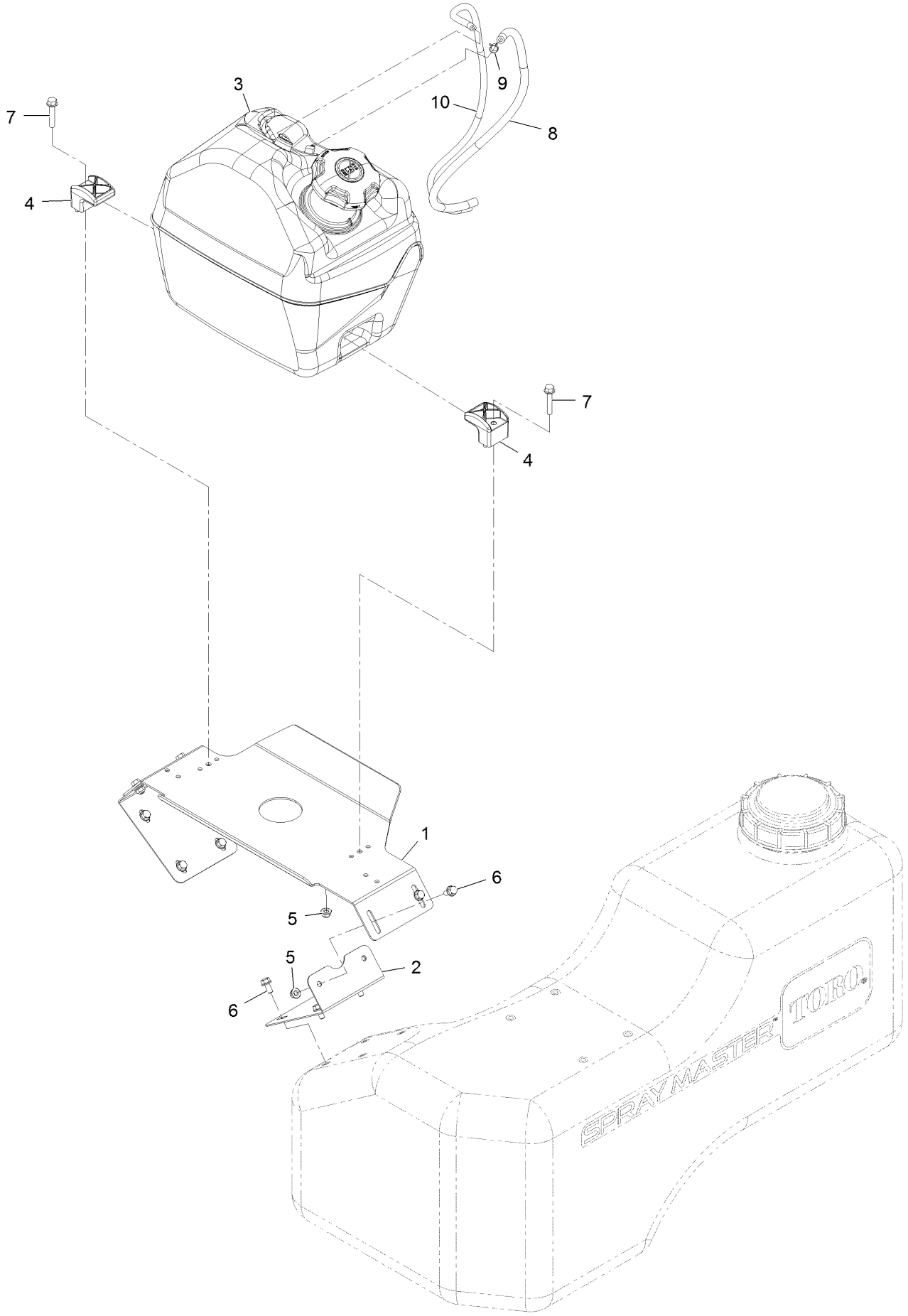

# Fuel Assembly (continued)

| Ref. | Part Number | Qty. | Description |
|---|---|---|---|
| 1 | 142-2975 | 1 | Support-Fuel Tank |
| 2 | 135-5555 | 2 | Bracket-Support, Gas Tank |
| 3 | 140-4343 | 1 | Fuel Tank ASM, 5 Gal |
| 4 | 107-4543 | 2 | Clamp |
| 5 | 135-6109 | 6 | Nut-Hex Flg 5/16-18 Nyloc SS |
| 6 | 135-7086 | 12 | Screw-HHF 5/16-18 X 5/8 Serrated SS |
| 7 | 135-5779 | 2 | Screw-HHF 5/16-18 X 1 3/4 Serrated SS |
| 8 | 109-1395 | 1 | Hose-Fuel Line 27" |
| 9 | 2412-98 | 1 | Clamp-Hose |
| 10 | 117-9569 | 1 | Hose-Fuel |

# Fuel Tank Assembly No. 140-4343

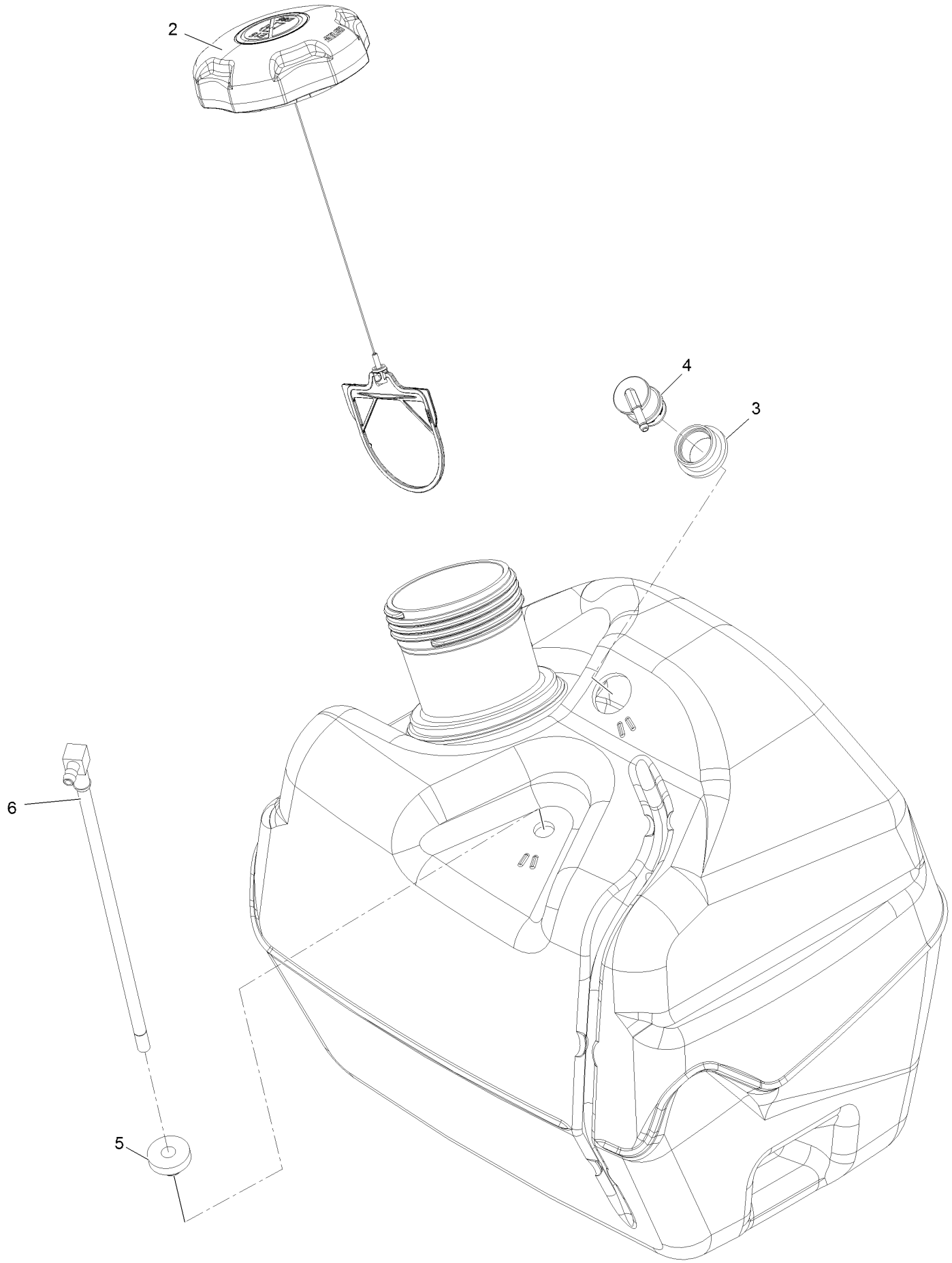

# Fuel Tank Assembly No. 140-4343 (continued)

| Ref. | Part Number | Qty. | Description |
|---|---|---|---|
| 2 | 137-4119 | 1 | Cap-Fuel, Ratcheting |
| 3 | 114-0284 | 1 | Grommet |
| 4 | 119-3547 | 1 | Valve-Vent, Fuel |
| 5 | 46-6560 | 1 | Bushing |
| 6 | 109-9364 | 1 | Fitting-Fuel (W/Line And Screen) |

# Spray System Assembly

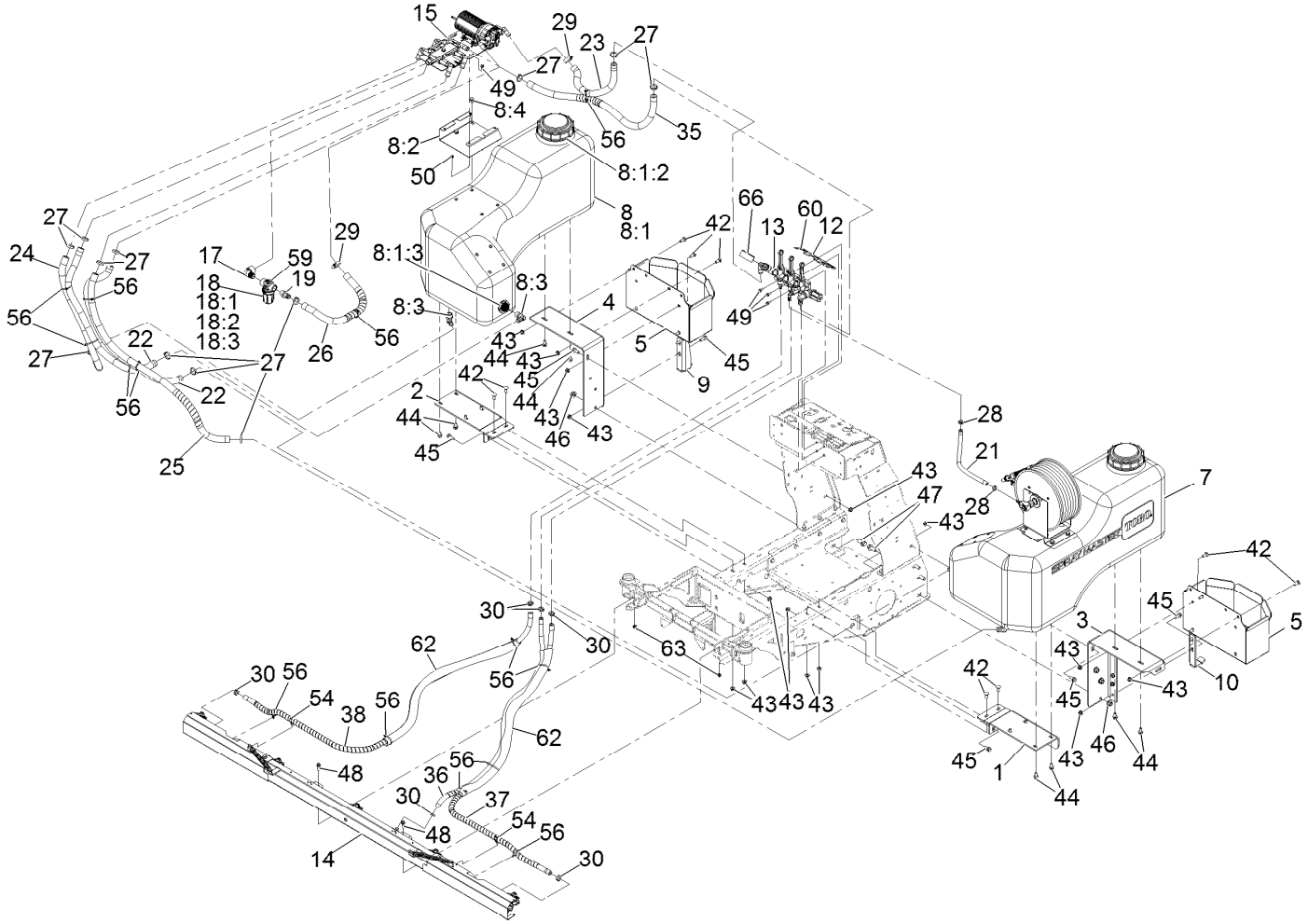

# Spray System Assembly (continued)

| Ref. | Part Number | Qty. | Description |
|---|---|---|---|
| 1 | 135-5495 | 1 | Mount-Tank, LH |
| 2 | 135-5496 | 1 | Mount-Tank, RH |
| 3 | 135-5395 | 1 | Mount-Box, Lt |
| 4 | 135-5397 | 1 | Mount-Box, Rt |
| 5 | 142-2436 | 2 | Box-Fert, Max |
| 7 | | 1 | ASM-Tank Hose Reel ■ |
| 8 | | 1 | ASM-Tank Rt ■ |
| 8:1 | 135-7870 | 1 | ASM-Tank, Rt |
| 8:1:2 | 135-5916 | 1 | Cap-Tank, Spray |
| 8:1:3 | 126-4393 | 2 | Fitting-Bulkhead |
| 8:2 | 135-5546 | 1 | Mount-Platform, Liquid Valve |
| 8:3 | 135-5772 | 2 | Fitting-Elbow, 90 |
| 8:4 | 135-7096 | 4 | Screw-HHF |
| 9 | 135-5408 | 1 | Bracket-Tip, Anti (Rt) |
| 10 | 135-5406 | 1 | Bracket-Tip, Anti (Lt) |
| 12 | 135-5570-05 | 1 | Bracket-Manifold |
| 13 | | 1 | ASM-Manifold ■ |
| 14 | | 1 | ASM-Boom, Spray ■ |
| 15 | | 1 | ASM, Liquid Valve ■ |
| 17 | 132-7706 | 1 | Elbow-90 DEG |
| 18 | 135-5765 | 1 | Strainer-Inline |
| 18:1 | 126-7195 | 1 | Bowl-Strainer |
| 18:2 | 126-2272 | 1 | Gasket-Head, Line Strainer |
| 18:3 | 135-5766 | 1 | Screen-Strainer, 50 Mesh |
| 19 | 41257 | 1 | Hosebarb |
| 21 | 135-5321 | 1 | Hose-Spray |
| 22 | 135-6163 | 2 | Hose-Spray |
| 23 | 135-5324 | 1 | Hose-Spray |
| 24 | 135-5326 | 1 | Hose-Spray |
| 25 | 135-5327 | 1 | Hose-Spray, Wrapped |
| 26 | 135-5325 | 1 | Hose-Spray, Wrapped |
| 27 | 135-5890 | 12 | Clamp-Oetiker, 167 |
| 28 | 135-5757 | 2 | Clamp-Oetiker, 167 |
| 29 | 2412-129 | 2 | Clamp-Hose |
| 30 | 135-5692 | 6 | Clamp-Oetiker, 167 |
| 35 | 135-6480 | 1 | Hose-Spray, Wrapped |
| 36 | 135-5294 | 1 | Hose-Spray, Wrapped |
| 37 | 135-5295 | 1 | Hose-Spray, Wrapped |
| 38 | 135-5296 | 1 | Hose-Spray, Wrapped |
| 42 | 126-0980 | 12 | Screw-CARR |
| 43 | 135-6110 | 22 | Nut-Hex Flange |
| 44 | 135-6274 | 12 | Screw-HHF |
| 45 | 135-6208 | 10 | Screw-HHF |
| 46 | 135-6111 | 6 | Nut-Hex Flange |
| 47 | 135-6207 | 6 | Screw-HHF |
| 48 | 135-6272 | 2 | Screw-HHF |
| 49 | 135-6221 | 7 | Screw-HHF |
| 50 | 135-6108 | 4 | Nut-Hex Flange |
| 54 | 32180-030 | 2 | Clip-Tie |
| 56 | 3290-378 | 14 | Tie-Cable |
| 59 | 135-6424 | 1 | Decal-Cap, Strainer |
| 60 | 135-6285 | 1 | Decal-Valve, Boom |
| 62 | 135-6484 | 2 | Guard-Mesh |
| 63 | 135-6109 | 2 | Nut-Hex Flange |
| 66 | 142-3437 | 1 | Gauge-Plain |
| 99 | 3290-379 | 3 | Tie-Cable ● |

● Not illustrated

■ Not serviced separately

# Tank Hose Reel Assembly

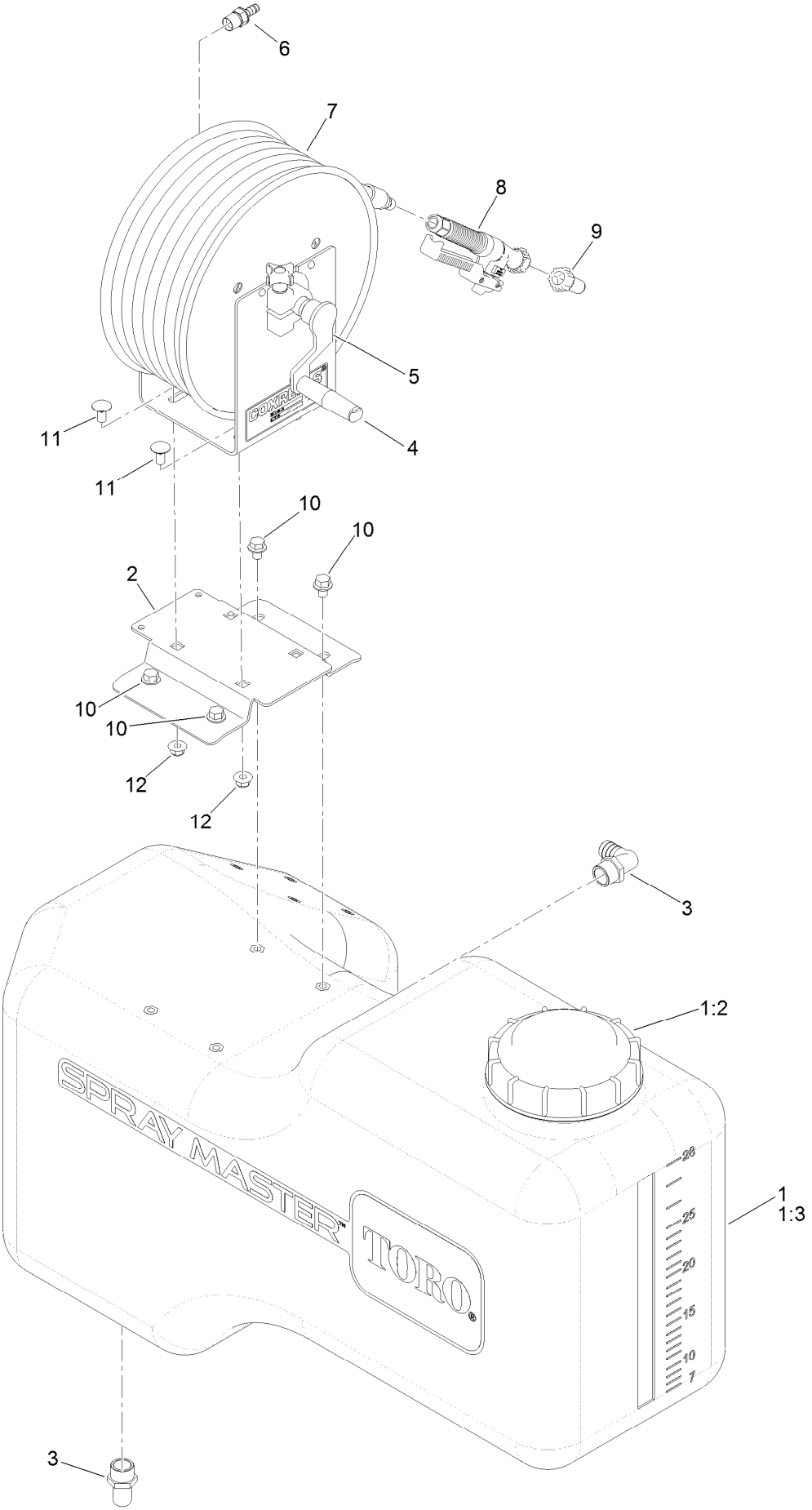

# Tank Hose Reel Assembly (continued)

| Ref. | Part Number | Qty. | Description |
|---|---|---|---|
| 1 | 135-7868 | 1 | ASM-Tank, Lt |
| 1:2 | 135-5916 | 1 | Cap-Tank, Spray |
| 1:3 | 126-4393 | 2 | Fitting-Bulkhead |
| 2 | 135-5497 | 1 | Mount-Reel, Hose |
| 3 | 135-5772 | 2 | Fitting-Elbow, 90 |
| 4 | 135-5787 | 1 | Reel-Hose |
| 5 | 135-6011 | 1 | Crank-Reel |
| 6 | 1-513200 | 2 | Fitting,Male |
| 7 | 135-5794 | 1 | Hose-Spray, 75' |
| 8 | 135-5773 | 1 | Gun-Spray, Spot |
| 9 | 135-5778 | 1 | Tip-Spray, #12 Spot |
| 10 | 135-7096 | 4 | Screw-HHF |
| 11 | 135-6271 | 4 | Screw-Carriage |
| 12 | 135-6110 | 4 | Nut-Hex Flange |
| 13 | 135-5757 | 1 | Clamp-Oetiker, 167 ● |

● Not illustrated

# Reel Hose Assembly

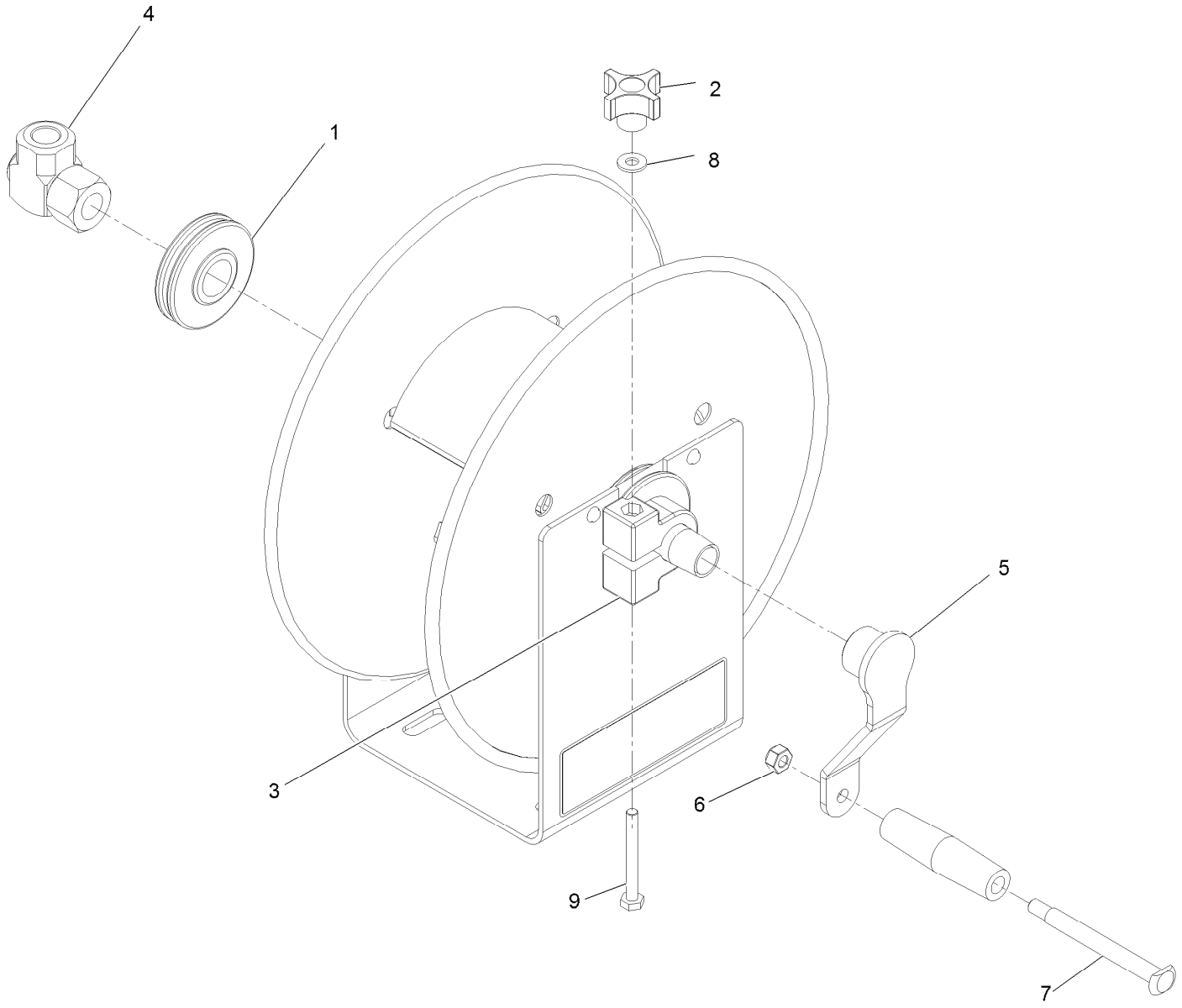

# Reel Hose Assembly (continued)

| Ref. | Part Number | Qty. | Description |
|---|---|---|---|
| 1 | 135-8439 | 1 | Plastic Bearing |
| 2 | 135-8437 | 1 | Hose Reel Brake Knob |
| 3 | 135-8438 | 1 | Brake/Bearing 6329-1-1 |
| 4 | 135-8421 | 1 | Swivel 3/8" Npt |
| 5 | 135-6011 | 1 | Crank-Reel |
| 6 | 119-4038 | 1 | Nut-Hex Nyloc 5/16-18 |
| 7 | 135-8436 | 1 | Bolt, Hose Reel Handle |
| 8 | 120-9679 | 1 | Washer-Flat |
| 9 | 321-18 | 1 | Screw-HH 1/4-20 X 2 1/4 |

# Manifold Assembly

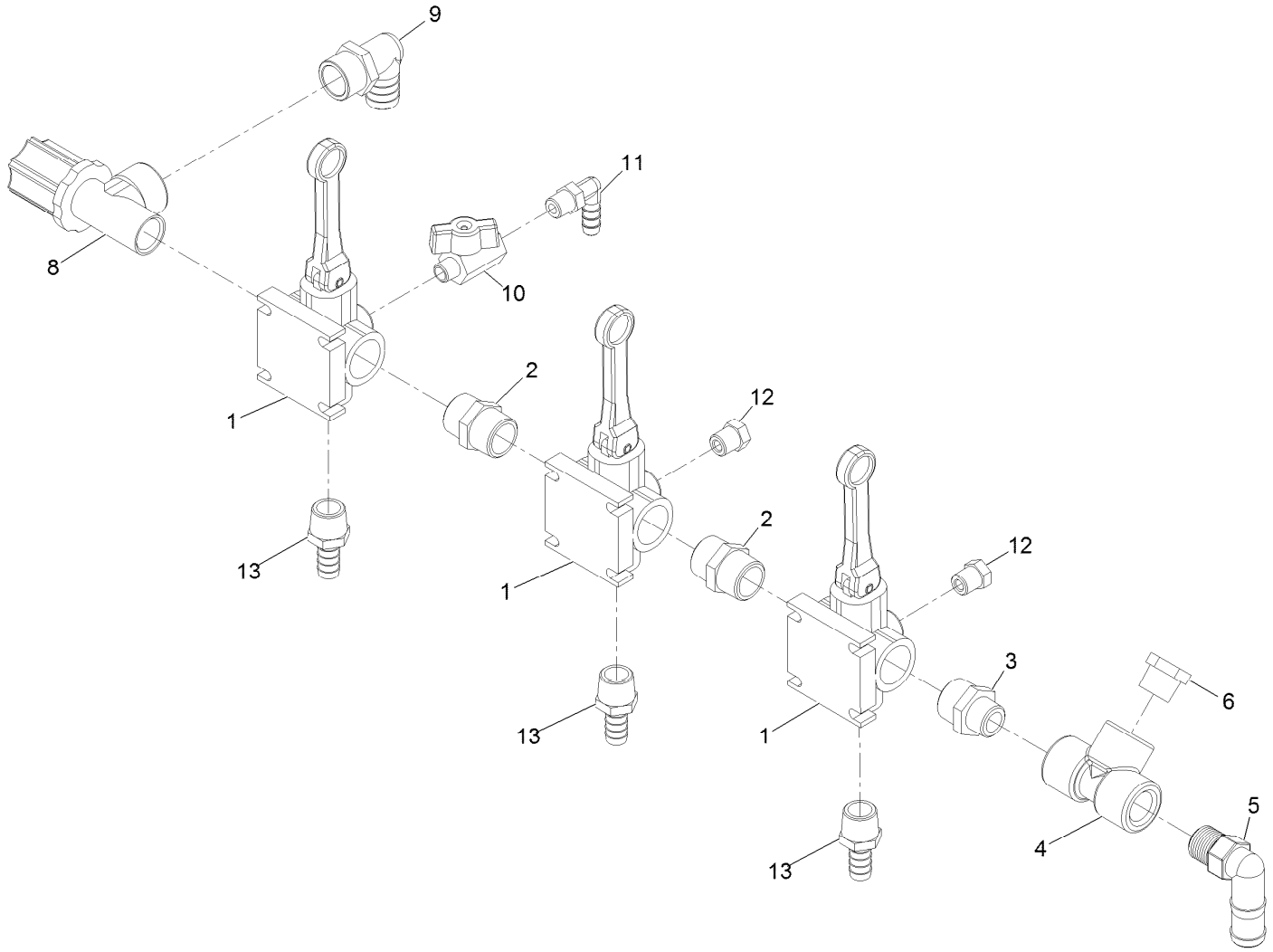

# Manifold Assembly (continued)

| Ref. | Part Number | Qty. | Description |
|---|---|---|---|
| 1 | 135-5721 | 3 | Valve-Directo |
| 2 | 135-5741 | 2 | Fitting-Nipple |
| 3 | 135-5742 | 1 | Fitting-Nipple |
| 4 | 94-7100 | 1 | Tee |
| 5 | 92-8557 | 1 | Elbow-90 |
| 6 | 135-5743 | 1 | Fitting-Reducer |
| 8 | 135-5736 | 1 | Valve-Throttle |
| 9 | 135-5772 | 1 | Fitting-Elbow, 90 |
| 10 | 135-5737 | 1 | Valve-Chrome, 1/4 |
| 11 | 135-5745 | 1 | Fitting-Elbow, 90 |
| 12 | 135-5735 | 2 | Plug-Valve |
| 13 | 120-8671 | 3 | Fitting-Hosebarb |

# Spray Boom Assembly

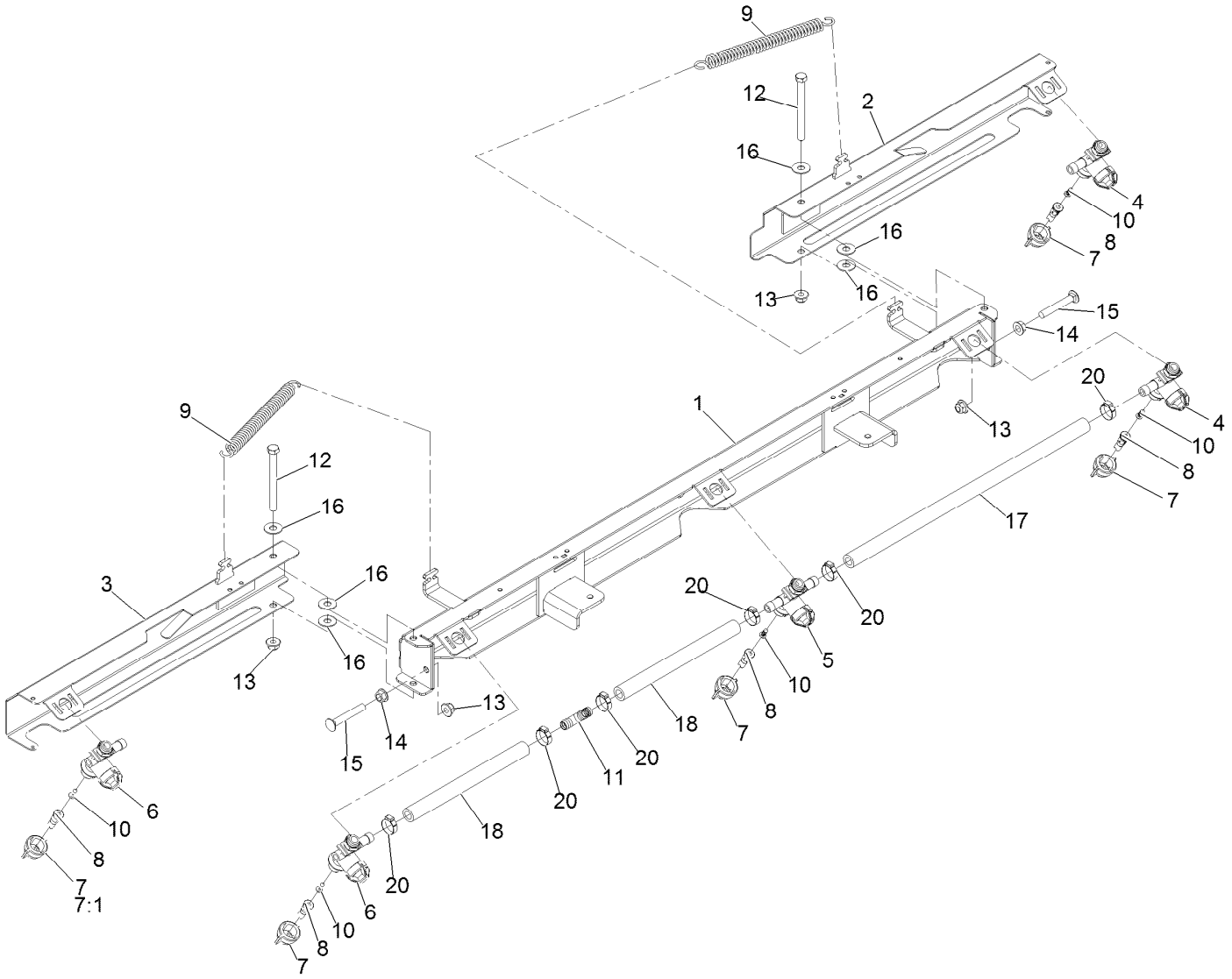

# Spray Boom Assembly (continued)

| Ref. | Part Number | Qty. | Description |
|---|---|---|---|
| 1 | 135-5409 | 1 | Boom-Center |
| 2 | 135-5415 | 1 | Boom-Wing, Rt |
| 3 | 135-5419 | 1 | Boom-Wing, Lt |
| 4 | 135-5790 | 2 | Body-Nozzle, Right |
| 5 | 135-5789 | 1 | Body-Nozzle, Center |
| 6 | 135-5788 | 2 | Body-Nozzle, Left |
| 7 | 135-5781 | 5 | Cap-Nozzle |
| 7:1 | 40998 | 1 | Seat-Gasket |
| 8 | 142-3308 | 5 | Tip-Spray, 025 |
| 9 | 135-5780 | 2 | Spring-Extension |
| 10 | 126-3943 | 5 | Strainer-Nozzle, 50M 5PSI Check |

| Ref. | Part Number | Qty. | Description |
|---|---|---|---|
| 11 | 138-2751 | 1 | Fitting-Tee, Barb |
| 12 | 135-6310 | 2 | Screw-HH 3/8-16 X 4 SS |
| 13 | 135-6110 | 4 | Nut-Hex Flg 3/8-16 SS W/Patch SS |
| 14 | 135-6806 | 2 | Nut-Hex Flange 3/8-16 Serrated SS |
| 15 | 126-0702 | 2 | Bolt-Carriage 3/8-16 X 2 1/2 SS |
| 16 | 1126 | 6 | Washer-Flat |
| 17 | 135-7106 | 1 | Hose-Spray |
| 18 | 135-7105 | 2 | Hose-Spray |
| 20 | 135-5692 | 6 | Clamp-Oetiker, 167 |

# Liquid Valve Assembly

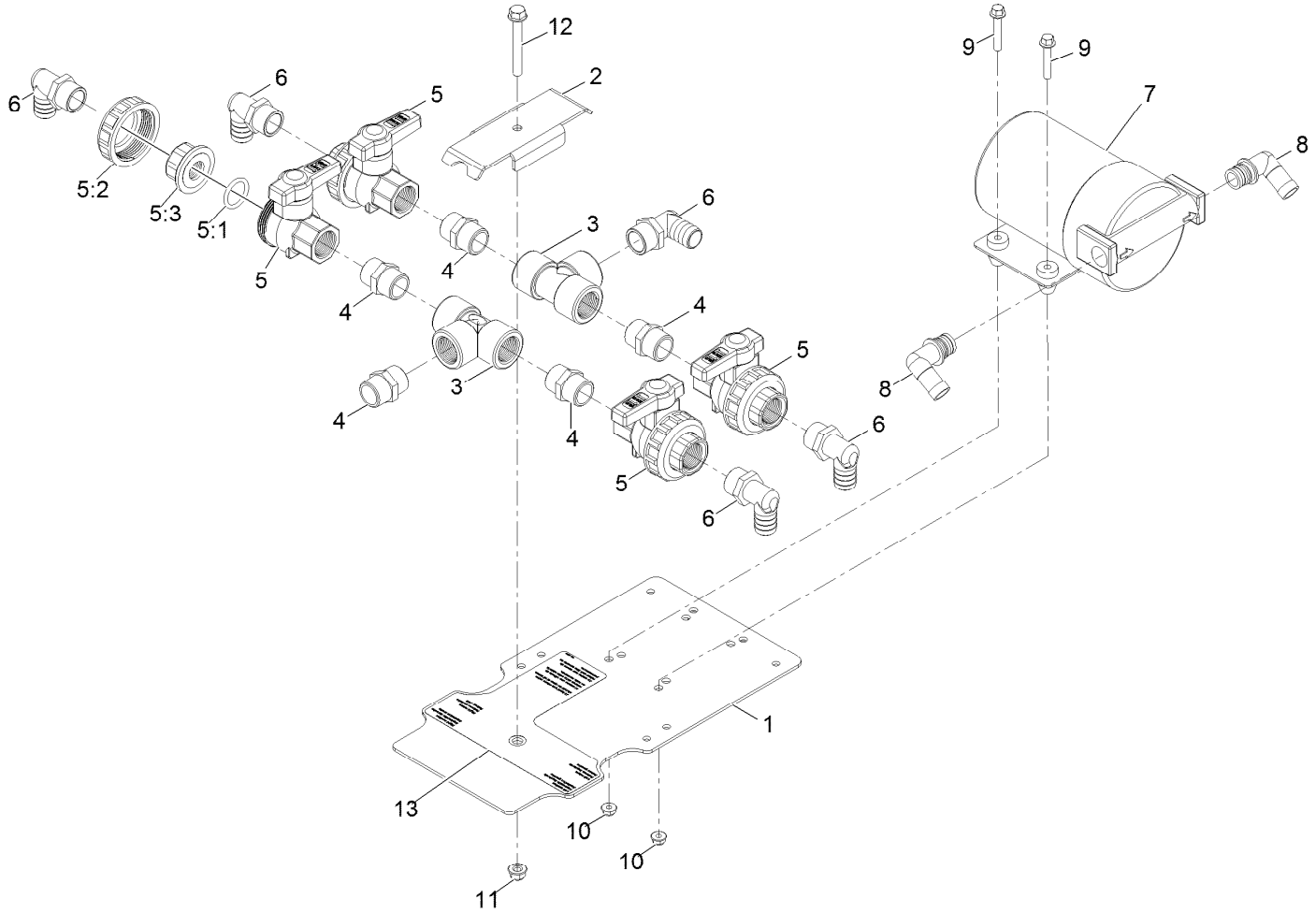

# Liquid Valve Assembly (continued)

| Ref. | Part Number | Qty. | Description |
|---|---|---|---|
| 1 | 135-5491 | 1 | Mount-Plate, Liquid Valve |
| 2 | 135-5504 | 1 | Plate-Clamp, Liquid Valve Fittings |
| 3 | 135-6004 | 2 | Fitting-Tee |
| 4 | 135-5741 | 5 | Fitting-Nipple |
| 5 | 135-6002 | 4 | Valve-Union, 3/4 |
| 5:1 | 135-6006 | 1 | O-Ring |
| 5:2 | 135-6007 | 1 | Ring-Valve, Union 3/4 |
| 5:3 | 135-6008 | 1 | Adapter-Uv, 3/4 |
| 6 | 135-5772 | 5 | Fitting-Elbow, 90 |
| 7 | 135-8324 | 1 | 7.0 Remco Pump |
| 8 | 135-6003 | 2 | Fitting-Elbow, 3/4Qd X 3/4Barb |
| 9 | 135-6320 | 4 | Screw-HHF 1/4-20 X 1 1/2 Serrated SS |
| 10 | 135-6108 | 4 | Nut-Hex Flg 1/4-20 Nyloc SS |
| 11 | 135-6109 | 1 | Nut-Hex Flg 5/16-18 Nyloc SS |
| 12 | 135-6323 | 1 | Screw-HHF 5/16-18 X 2 1/2 Serrated SS |
| 13 | 135-6420 | 1 | Decal-Valve, Tank |

# Hopper Assembly

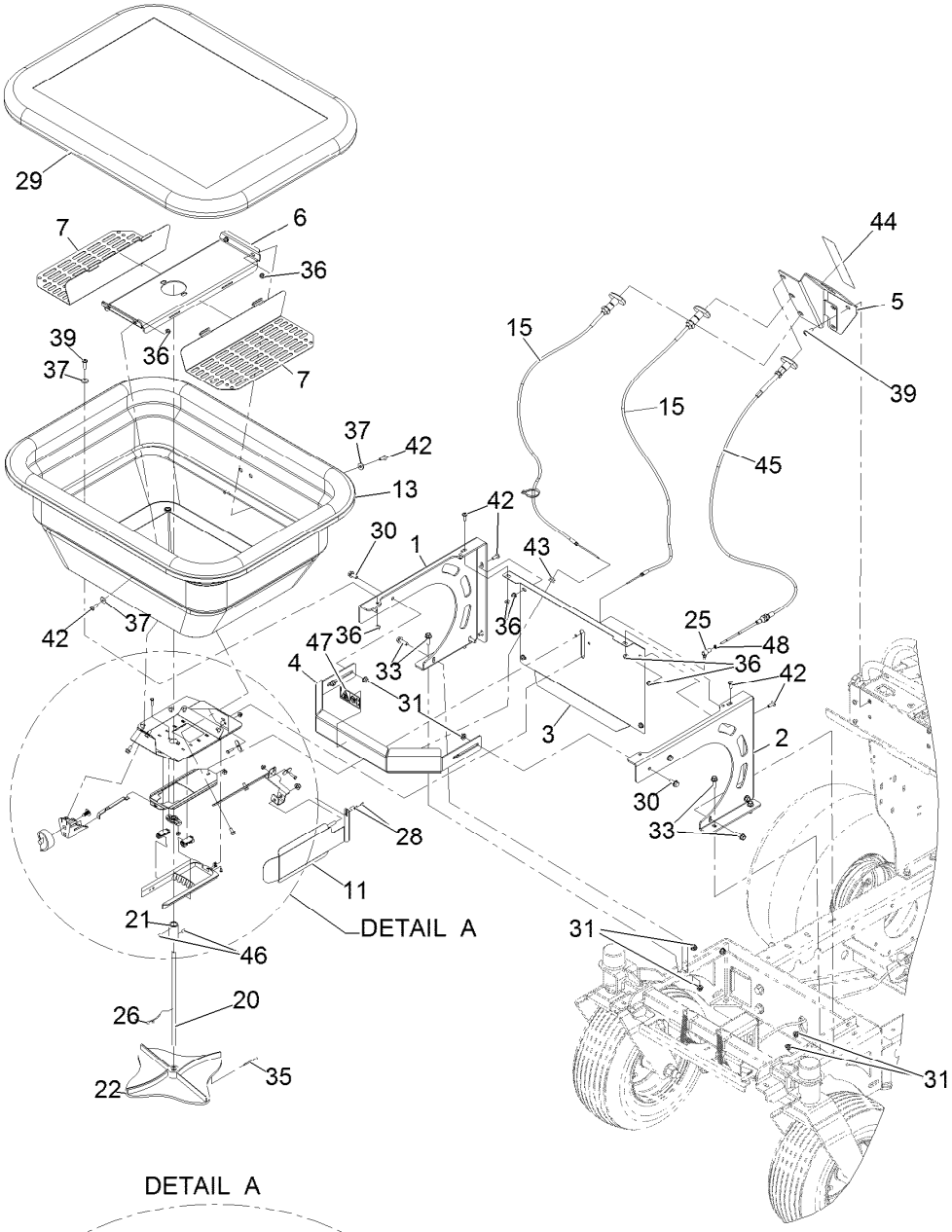


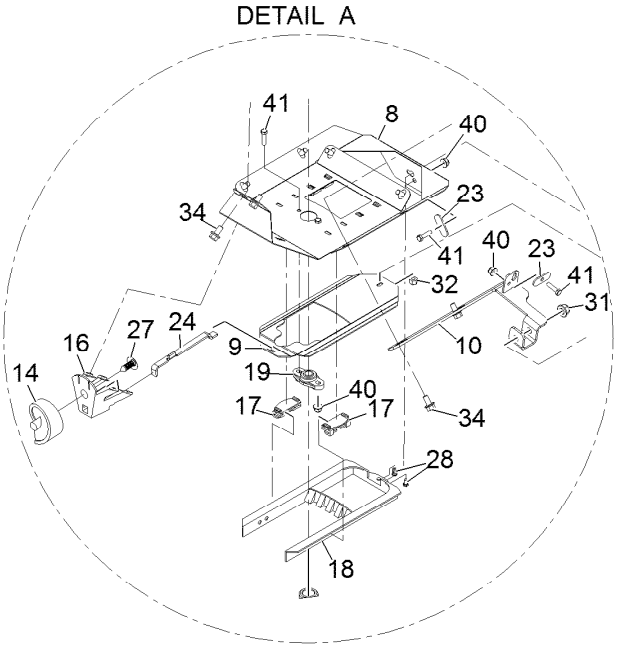

# Hopper Assembly (continued)

| Ref. | Part Number | Qty. | Description |
|---|---|---|---|
| 1 | 135-5391 | 1 | Side-Hopper, Rt |
| 2 | 135-5393 | 1 | Side-Hopper, Lt |
| 3 | 135-5571 | 1 | Backshield-Hopper |
| 4 | 135-5567 | 1 | Bumper-Front, Hopper |
| 5 | 142-3283-05 | 1 | Mount-Speedometer |
| 6 | 135-5542 | 1 | Pan-Hopper, 220 |
| 7 | 135-5544 | 2 | Screen-Hopper, 220 |
| 8 | 135-5572 | 1 | Plate-Base, Hopper |
| 9 | 135-5573 | 1 | Slide-Door, Hopper |
| 10 | 135-5388 | 1 | Mount-Deflector, Side |
| 11 | 135-5589 | 1 | Deflector-Side, Spreader |
| 13 | 135-5985 | 1 | Hopper-220Lb |
| 14 | 126-0988 | 1 | Dial |
| 15 | 135-5931 | 2 | Cable-Push/Pull |
| 16 | 126-0985 | 1 | Mount-Dial |
| 17 | 126-0990 | 4 | Guide-Rate, Gate |
| 18 | 126-0991 | 1 | Diffuser |
| 19 | 135-5943 | 1 | Bearing-Flange |
| 20 | 135-5936 | 1 | Shaft-Hopper, 220 |
| 21 | 135-5937 | 1 | Coupler-SS |
| 22 | 135-5954 | 1 | Spinner-Spreader |
| 23 | 135-5569 | 2 | Retainer, Cable |
| 24 | 135-5965 | 1 | Linkage-Gate, Rate |
| 25 | 135-5682 | 1 | Ball Joint-SS |
| 26 | 135-5957 | 1 | Wire-Agitator |
| 27 | 126-0986 | 1 | Clip |
| 28 | 135-5961 | 2 | Retainer-Cable, Wire |
| 29 | 135-7981 | 1 | Cover-Hopper, Large |
| 30 | 126-2712 | 4 | Screw-HHF |
| 31 | 135-6109 | 13 | Nut-Hex Flange |
| 32 | HDW05856 | 1 | Nut-NYL Lock,#10-32,ST/ST 18-8 |
| 33 | 135-6272 | 8 | Screw-HHF |
| 34 | 135-6280 | 8 | Screw-HHF, 1/4-20 X 1/2, Ser Flg, SS |
| 35 | 135-6340 | 1 | Pin-Cotter |
| 36 | 135-6108 | 14 | Nut-Hex Flange |
| 37 | 135-6341 | 8 | Washer |
| 39 | 135-7081 | 5 | Screw-Hsbhf |
| 40 | 135-6342 | 4 | Nut-Hex Flange |
| 41 | 135-6356 | 4 | Screw-HH |
| 42 | 135-7080 | 10 | Screw-Hsbhf |
| 43 | 135-5988 | 1 | Grommet-Rubber |
| 44 | 142-3351 | 1 | Decal-Hopper Control |
| 45 | 135-5935 | 1 | Cable-Push/Pull |
| 46 | 3241-7 | 2 | Screw-SQH |
| 47 | 135-6725 | 1 | Decal-Dismemberment Hazard |
| 48 | 520-0019 | 1 | Nut-Hex, Jam |
| 50 | 3290-378 | 1 | Tie-Cable ● |

● Not illustrated

# Attachments and Accessories

## For 34237 52in (7 GPM) Sprayer Spray Master Max

| Product Name | Model/Part |
|---|---|
| Foam Marker Kit | 135-6663 |
| 7 Gallon Auxiliary Tank Kit | 142-2269 |
| 7 Gallon Isolated Tank Kit | 142-2270 |
| 30 Gallon Auxiliary Tank Kit | 142-2271 |
| Tip-Spray, 015 | 142-3306 |
| Tip-Spray, 02 | 142-3307 |
| Tip-Spray, 025 | 142-3308 |
| Tip-Spray, 03 | 142-3309 |
| Tip-Spray, 04 | 142-3310 |
| Tip-Spray, 05 | 142-3311 |
| Tip-Spray, 06 | 142-3312 |

**Notes:**

**Notes:**

**Notes:**

TORO®

Count on it.