Form No. 3436-995 Rev B

TORO®

Count on it.

Parts Catalog

52in (7 GPM) Sprayer

Spray Master Max

Model No. 34237—Serial No. 400000000 and Up

Register at www.Toro.com.
Original Instructions (EN)

3436-995 B

Ordering Replacement Parts

To order replacement parts, please supply the part number, the quantity, and the description of each part desired.

Understanding Reference Numbers

Each identified part in an illustration has a reference number. The reference number for a part also appears in the parts list, along with other information about the part.

This catalog uses two special reference number formats, one to indicate parts in a service assembly and another to indicate the quantity of a given part in an illustration.

Service Assembly Reference Numbers

Parts in service assemblies have reference numbers in the form a:b. The a represents the reference number of the entire service assembly and the b represents a sequential number unique to each part within the service assembly.

For example, a wheel assembly might be identified by reference number 6, the tire by 6:1, the valve by 6:2, and the wheel by 6:3. When you order the assembly identified by reference number 6, you receive all parts identified by reference numbers 6:1,6:2, and 6:3. However, you may also order any part individually. Reference numbers of this type appear in illustration and in parts lists.

Reference Numbers Indicating Quantity

In an illustration, if a reference number indicates more than one part, the reference number has the form nX y. The n represents the quantity of the part, the X is the multiplication symbol, and the y represents the reference number.

For example, in an illustration, the reference number 2X 37 means that two of the parts identified by reference number 37 are indicated.

Contents

Main Frame Assembly 4
Engine Assembly 6
Hydraulic Assembly 8
Park Brake Assembly 10
Electrical Assembly 12
Motion Control Assembly 14
Tire and Wheel Assembly 16
Fuel Assembly 18
Fuel Tank Assembly No. 140-4343 20
Spray System Assembly 22
Tank Hose Reel Assembly 24
Reel Hose Assembly 26
Manifold Assembly 28
Spray Boom Assembly 30
Liquid Valve Assembly 32
Hopper Assembly 34
Attachments and Accessories 36

© 2020—The Toro® Company
8111 Lyndale Avenue South
Bloomington, MN 55420

Contact us at www.Toro.com.
Printed in the USA.
All Rights Reserved

Main Frame Assembly

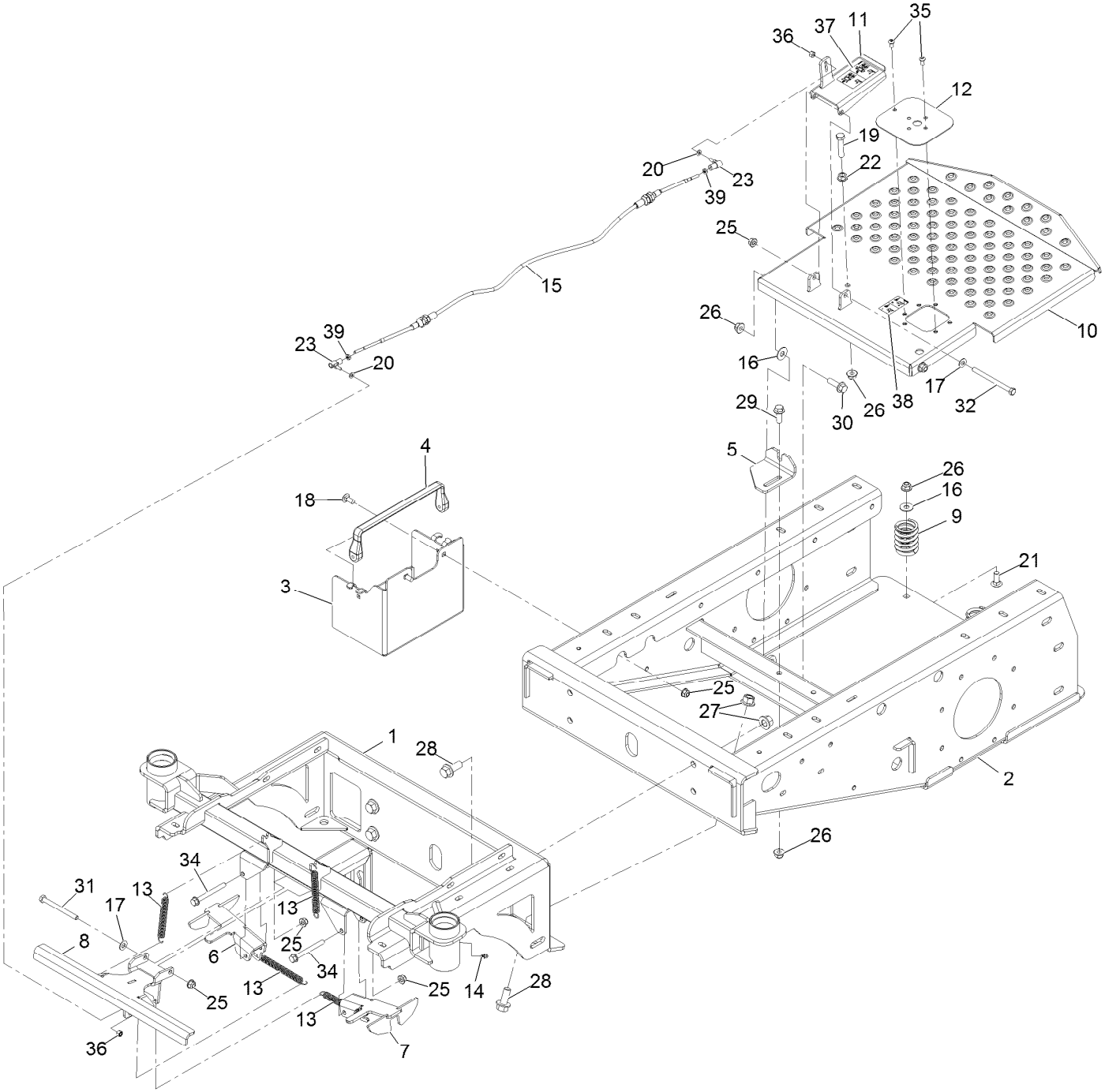

Main Frame Assembly (continued)

Ref.	Part Number	Qty.	Description
1	135-5179	1	Frame-Front
2	135-5171	1	Frame-Rear
3	142-3038	1	Box-Battery
4	142-1748	1	Strap, Tarp
5	135-5494	1	Bracket-Cable, Lower
6	135-5195	1	Wing-Capture, Rt
7	135-5194	1	Wing-Capture, Lt
8	135-5369	1	Capture-Lcs
9	135-5654	3	Spring-Compression
10	135-7502	1	Plate-Foot
11	135-5191	1	Pedal-Foot
12	135-5561	1	Panel-Switch, Foot
13	135-5652	4	Spring-Extension
14	302-63	2	Zerk
15	135-5644	1	Cable-Caster, Locking
16	1126	5	Washer-Flat
17	107-0279	2	Washer
18	126-0695	2	Screw-Carriage 5/16-18 X 3/4 SS
19	126-0710	1	Screw-HHF 3/8-16 X 1.75 SS
20	126-0759	2	Washer-Flat
21	126-0980	3	Bolt-Carriage 3/8-16 X 1 SS
22	135-6806	1	Nut-Hex Flange 3/8-16 Serrated SS
23	135-5682	2	Ball Joint-SS
25	135-6109	6	Nut-Hex Flg 5/16-18 Nyloc SS
26	135-6110	7	Nut-Hex Flg 3/8-16 SS W/Patch SS
27	135-6111	6	Nut-Hex Flg 3/8-16 SS W/Patch SS
28	135-6207	6	Screw-HHF 5/16-18 X 1 1/4 SS
29	135-6208	1	Screw-HHF 3/8-16 X 1 Serrated SS
30	135-6211	2	Screw-HHF 3/8-16 X 1 1/4 Serrated SS
31	135-6217	1	Screw-HH 5/16-18 X 3 1/2 SS
32	135-6218	1	Screw-HH 5/16-18 X 4 SS
34	135-6222	2	Screw-HHF 5/16-18 X 3 Serrated SS
35	135-6367	2	Screw-Button Head 1/4-20 X 1/2 SS
36	HDW05856	2	Nut-Hex Nyl Ins #10-32 Unf
37	135-6430	1	Decal-Lock, Caster
38	135-6728	1	Decal-Button, Foot (Spray)
39	520-0019	2	Nut-Hex Jam #10-32 Unf

Engine Assembly

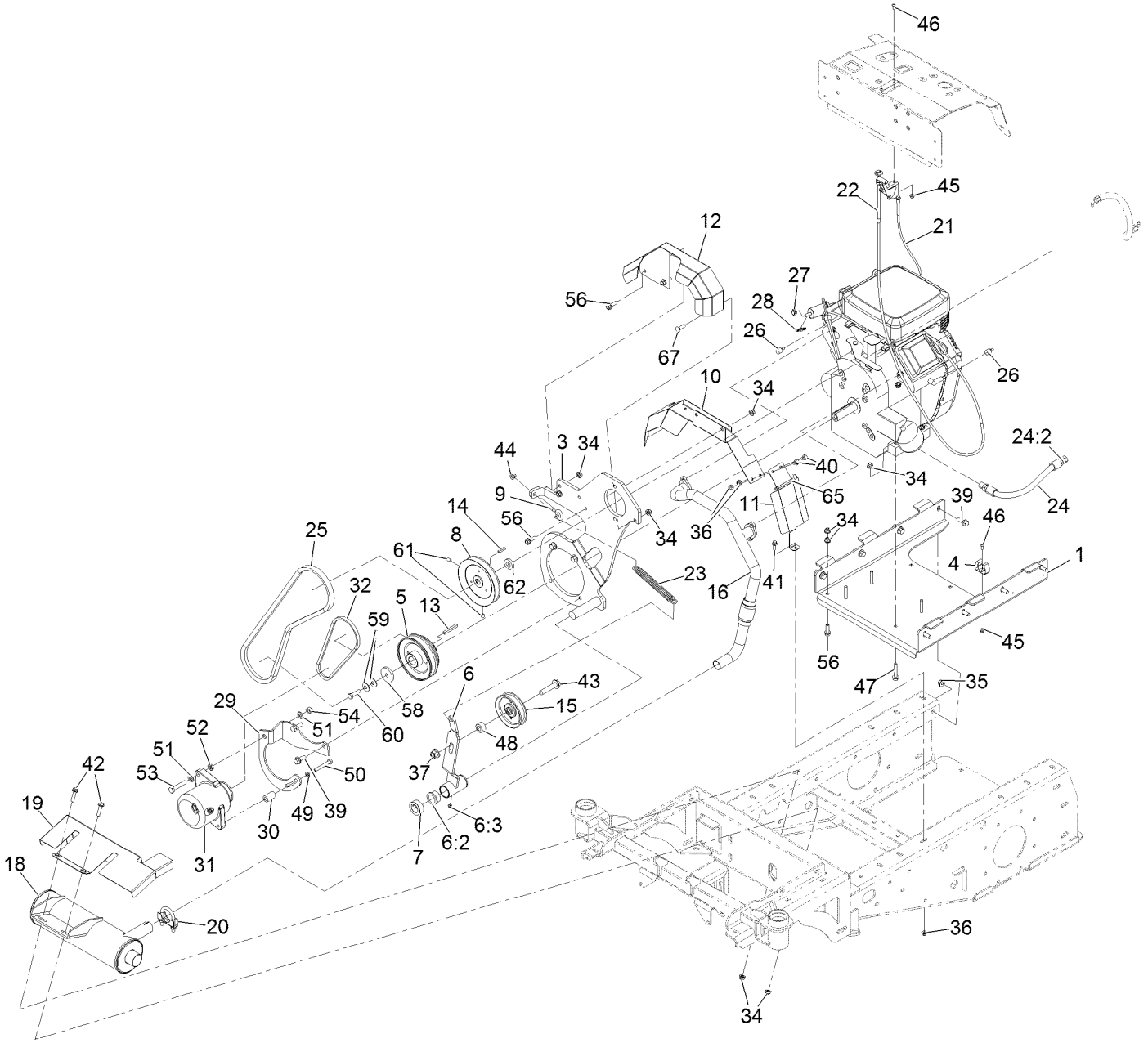

Engine Assembly (continued)

Ref.	Part Number	Qty.	Description
1	135-5492	1	Tray-Engine
3	135-5453-03	1	Bracket-Engine, Pump
4	135-5661	1	Holder-Tool, Clip
5	135-6394	1	Pulley-Double
6	135-5669	1	Tension Arm ASM
6:2	256-132	2	Bushing-Flange
6:3	302-63	1	Zerk
7	135-5382	1	Collar
8	135-5663	1	Pulley-Drive, Pump
9	135-5667	1	Bolt-Eye
10	135-5565	1	Guard-Muffler, Lower
11	135-5566	1	Guard-Muffler, Lower
12	142-3320	1	Guard-Pulley
13	103-4177	1	Key
14	1-807272	1	Key-5Mm X 5Mm X 25Mm
15	135-5662	1	Pulley-Idler, Flat
16	135-7089	1	Manifold-Exhaust
18	135-7090	1	Muffler
19	135-5568	1	Shield-Heat, Muffler
20	2112-11	1	Clamp-Muffler
21	135-5260	1	Cable-Throttle
22	135-5707	1	Cable-Choke
23	135-5780	1	Spring-Extension
24	135-5365	1	Oil Drain Hose ASM (W/Plug)
24:2	AU218-774	1	Plug
25	135-5664	1	Belt-V
26	135-5677	2	Tube-Shrink, Heat
27	2412-98	1	Clamp-Hose
28	120-1996	1	Fitting-STR
29	135-5929	1	Bracket-Alternator
30	135-5930	1	Tube-Support, Alternator
31	135-6057	1	Alternator
32	135-6613	1	Belt-V, 3L240
34	135-6109	13	Nut-Hex Flg 5/16-18 Nyloc SS
35	135-6110	8	Nut-Hex Flg 3/8-16 SS W/Patch SS
36	135-6108	3	Nut-Hex Flg 1/4-20 Nyloc SS
37	99-5107	1	Nut-Lock 1/2-13
39	135-6208	12	Screw-HHF 3/8-16 X 1 Serrated SS
40	135-6280	2	Screw-HHF 1/4-20 X 1/2 Serrated SS
41	135-6221	1	Screw-HHF 1/4-20 X 3/4 Serrated SS
42	135-6261	2	Screw-HHF 5/16-18 X 1 1/4 Serrated SS
43	3234-46	1	Screw-HHF 1/2-13 X 2 1/4
44	104-8300	1	Nut-Nyloc 5/16-18 Flg
45	135-6342	3	Nut-Hex Flg #10-24 Nyloc SS
46	135-6374	3	Screw-Button Head #10-24 X 1/2 SS
47	135-5779	4	Screw-HHF 5/16-18 X 1 3/4 Serrated SS
48	116-2959	1	Spacer
49	3253-4	1	Washer-Lock 5/16
50	120-9642	1	Screw-HH
51	33095-00	2	Washer-Flat
52	110-9346	1	Nut-Jam M10 Thin
53	33115-050	1	Screw-HH M10-1.5 X 50Mm
54	33025-00	1	Nut-Lock, NI
56	135-6272	5	Screw-HHF 5/16-18 X 1 Serrated SS
58	110-9981	1	Washer-Plain
59	3290-340	2	Washer-Belleville
60	3211-5	1	Screw-HH 3/8-24 X 1 1/4
61	3246-17	2	Screw-Set 5/16-24 X 1/2
62	1-323539	1	Spacer-Blade Drive
65	3290-378	1	Tie-Cable
67	HDW17294	1	Bolt-Carriage 5/16-18 X 1 SS

Hydraulic Assembly

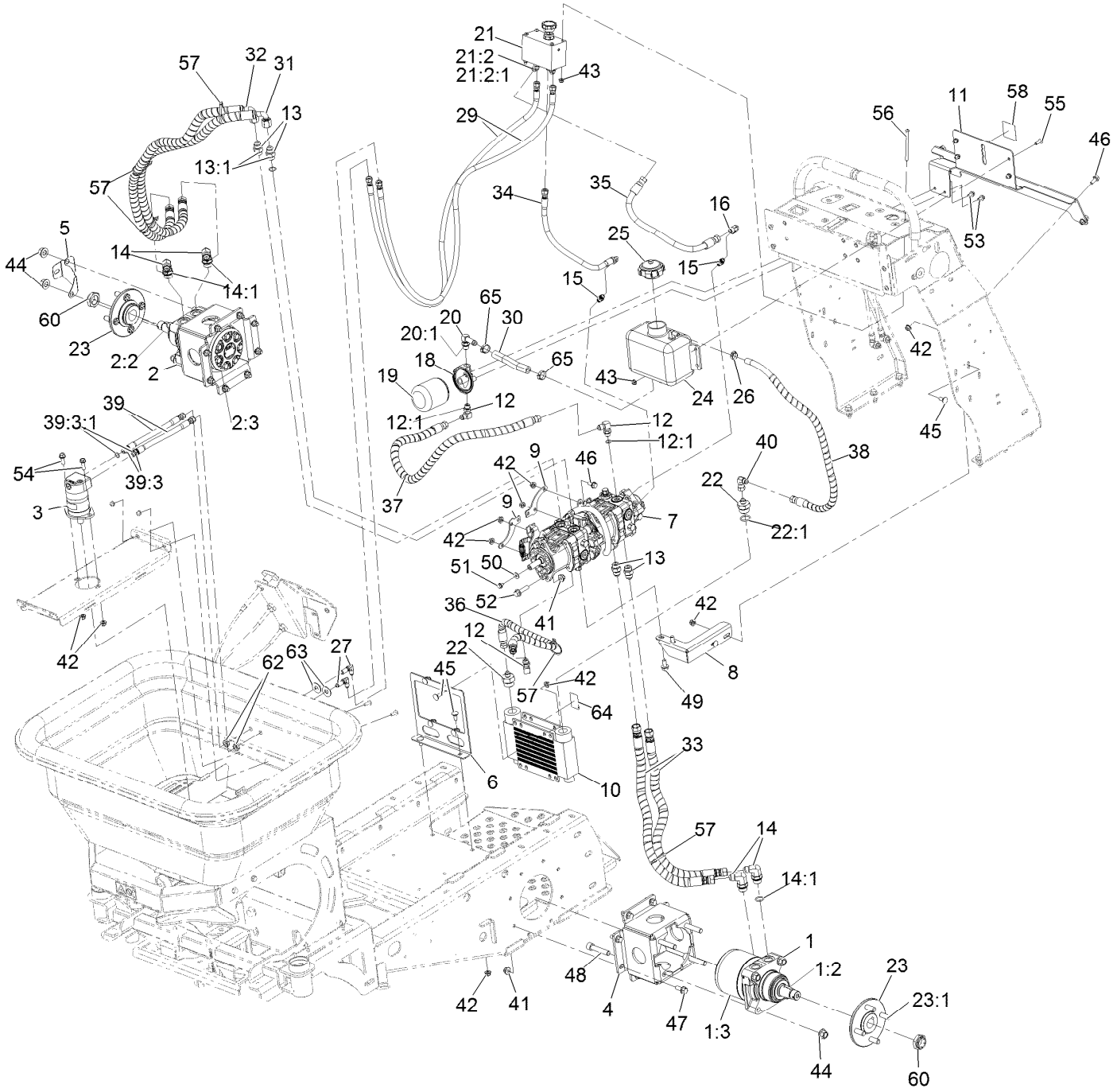

Hydraulic Assembly (continued)

Ref.	Part Number	Qty.	Description
1	135-5230	1	Motor-Wheel, LH
1:2	3257-42	1	Key-Woodruff
1:3	103-6994	1	Seal Kit
2	135-5231	1	Motor-Wheel, RH
2:2	3257-42	1	Key-Woodruff
2:3	103-6994	1	Seal Kit
3	135-5243	1	Motor-Hydraulic, Spreader
4	135-5448-03	2	Mount-Motor, Wheel [black]
5	135-5574	1	Bracket-Hopper, Speedometer Sensor
6	135-6483	1	Mount-Cooler
7	135-5665	1	Pump-Tandem
8	135-5551	1	Bracket-Support, Hydro Pump
9	135-5558	2	Extension-Pump, Hydro
10	135-5679	1	Cooler-Oil
11	135-5550	1	Mount-Tank And Filter, Hydraulic
12	103-1802	3	Fitting-Elbow, 90 DEG
12:1	237-42	1	O-Ring
13	353-388	4	Fitting-Straight
13:1	237-79	1	O-Ring
14	353-426	4	Fitting-90 DEG
14:1	237-80	1	O-Ring
15	353-545	2	Fitting-Straight
16	135-5680	1	Fitting-Swivel, 90 DEG
18	104-7836	1	Head-Filter
19	114-3494	1	Element-Filter, 25 Micron
20	109-6449	1	Fitting-Elbow, 90
20:1	237-42	1	O-Ring
21	135-5256	1	Manifold-Hopper, W/Out Relief
21:2	353-212	1	Fitting-Elbow, 45 DEG
21:2:1	237-42	1	O-Ring
22	AU218-5044	2	Adapter-Straight
22:1	237-81	1	O-Ring
23	135-7525	2	Hub-Wheel
23:1	135-7526	4	Stud-1/2-20 X 1.55
24	135-5712	1	Tank-Hydraulic, Plastic
25	135-5713	1	Cap-Vented
26	135-5757	1	Clamp-Oetiker, 167
27	135-5796	2	Fitting-Elbow, 90
29	142-3111	2	Hose ASM, HYD HP
30	109-5577	1	Hose-Hydraulic
31	142-3115	1	Hose ASM-HYD HP
32	142-3116	1	Hose ASM-HYD HP
33	142-3114	2	Hose ASM-HYD HP
34	142-3113	1	Hose ASM-HYD HP
35	135-5361	1	Hose ASM, HYD LP
36	135-5384	1	Hose ASM, HYD LP
37	135-5385	1	Hose ASM, HYD LP
38	135-5456	1	Hose ASM, HYD LP
39	142-3112	2	Hose ASM-HYD HP
39:3		1	Fitting-Straight, Rigid ●
39:3:1	237-42	1	O-Ring
40	AU218-980	1	Fitting-Swivel, 90 DEG
41	135-6110	18	Nut-Hex Flange
42	135-6109	18	Nut-Hex Flange
43	135-6108	8	Nut-Hex Flange
44	99-5107	8	Nut-Lock
45	126-0695	8	Screw-CARR
46	126-2712	8	Screw-HHF
47	135-6208	16	Screw-HHF
48	3274-71	8	Screw-HSH
49	135-6274	2	Screw-HHF
50	135-6273	1	Washer
51	81-1280	1	Screw-HHF
52	135-6278	2	Screw-HHF
53	135-6280	2	Screw-HHF, 1/4-20 X 1/2, Ser Flg, SS
54	135-6272	2	Screw-HHF
55	135-7080	4	Screw-Hsbhf
56	135-6385	4	Screw-HSBH
57	3290-378	6	Tie-Cable
58	135-6398	1	Decal-Oil
60	116-1399	2	Locknut
62	3220-4	2	Nut-Jam
63	135-5586	2	Washer
64	106-5517	1	Decal-Warning
65	135-5692	2	Clamp-Oetiker, 167

● Not serviced separately

Park Brake Assembly

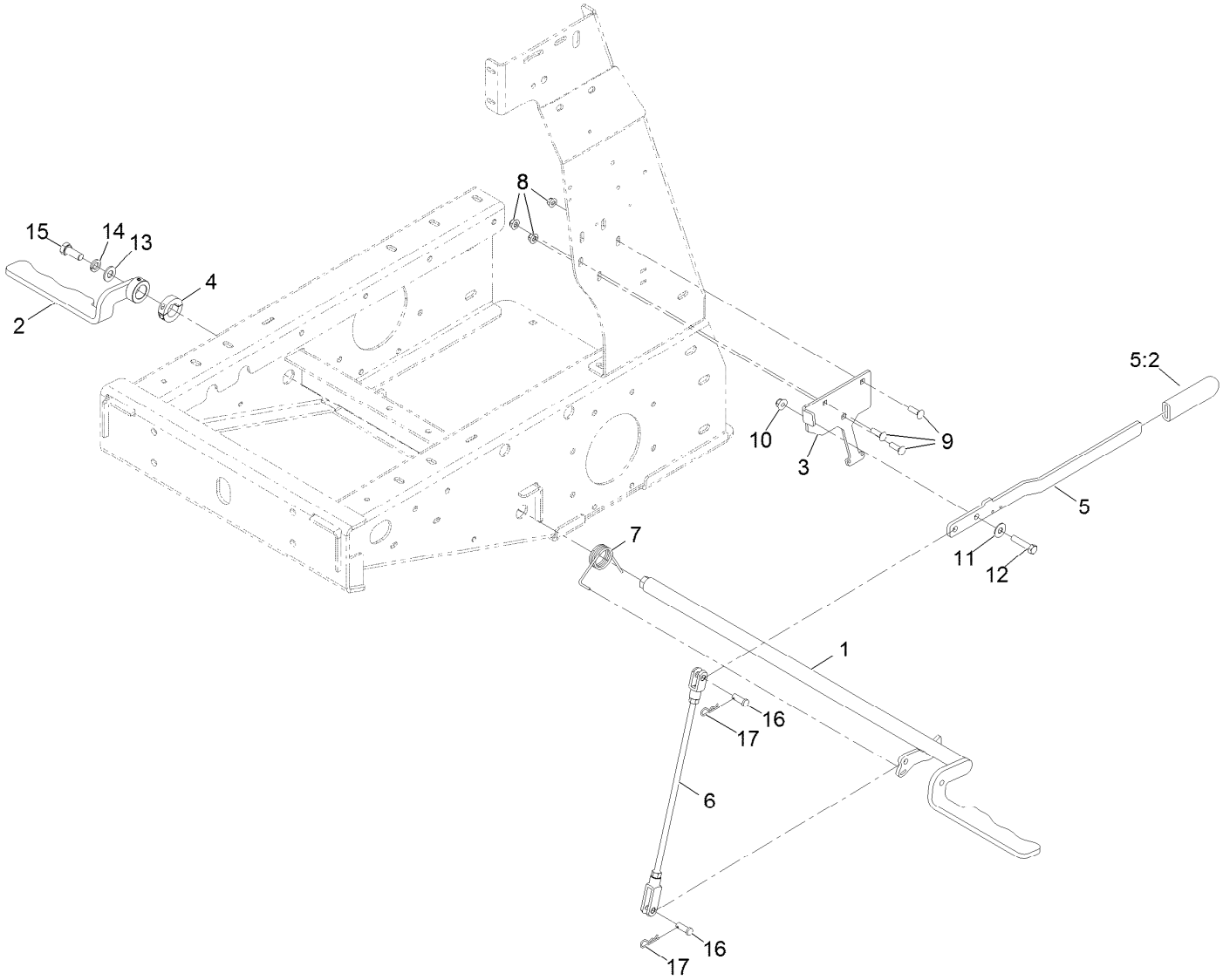

Park Brake Assembly (continued)

Ref.	Part Number	Qty.	Description
1	135-5380-03	1	Arm-Brake, Lt
2	135-5376-03	1	Arm-Brake, Rt
3	135-5432	1	Bracket-Handle, Brake
4	116-7271	1	Collar-Locking
5	135-6059	1	Brake Handle ASM
5:2	1-633268	1	Grip-Lever
6	135-6066	1	Brake Rod ASM
7	135-6106	1	Spring-Torsion
8	135-6109	3	Nut-Hex Flange
9	HDW17294	3	Bolt,Carriage,5/16-18X1,ST/ST 18-8
10	104-8301	1	Nut-HF, NI
11	1126	1	Washer-Flat
12	323-52	1	Screw-HH
13	3256-26	1	Washer-Flat
14	3253-7	1	Washer-Lock
15	106-0378	1	Screw
16	1-808284	2	Pin-Clevis
17	135-6284	2	Pin-Hair

Electrical Assembly

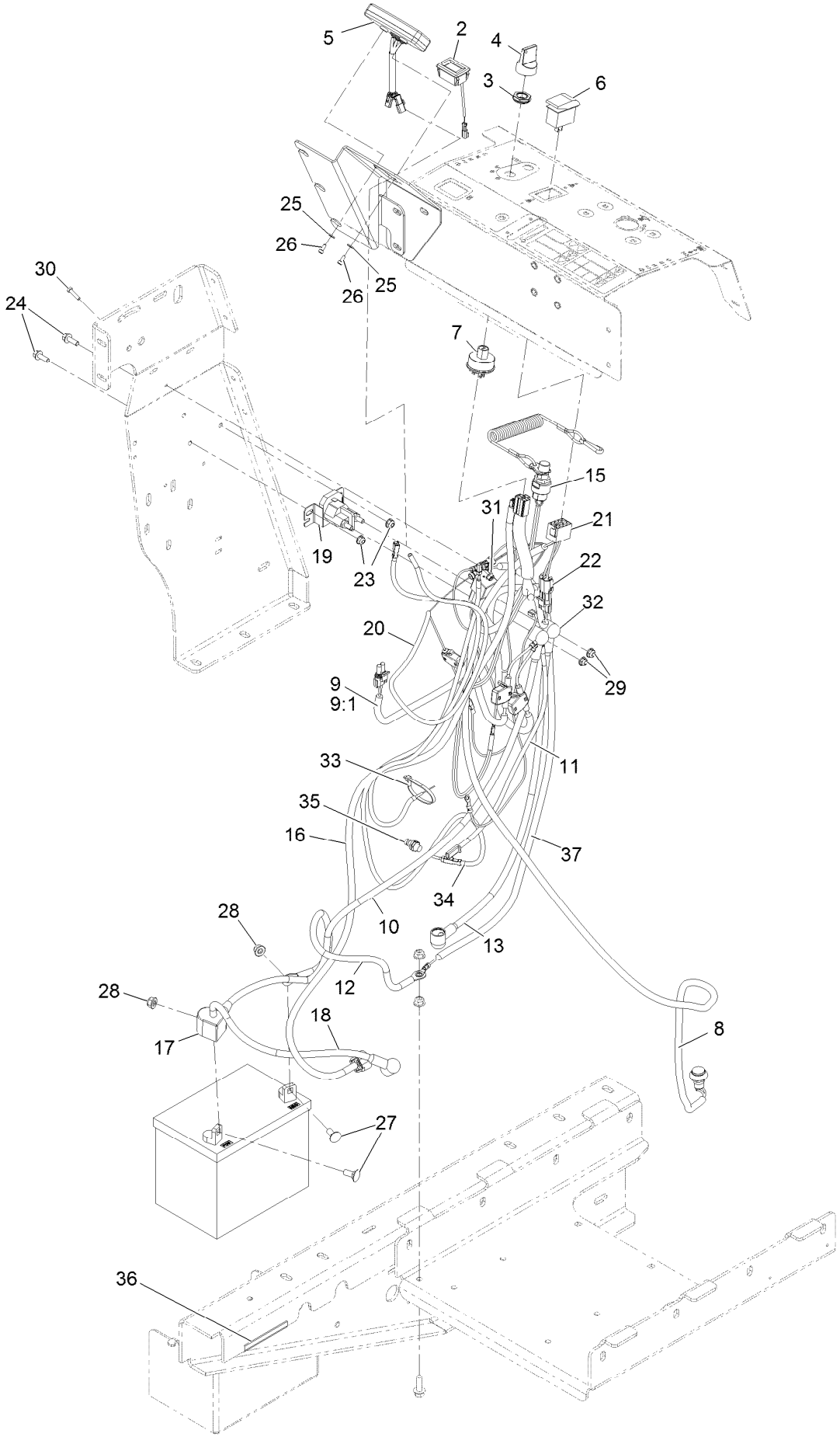

Electrical Assembly (continued)

Ref.	Part Number	Qty.	Description
2	135-5259	1	Meter-Tach/Hour
3	135-5715	1	Nut-Switch, Key
4	1-603511	1	Key-Ignition
4	135-5708	1	Key-Umbrella
5	135-8900	1	Striker-Head Only
6	100-8469	1	Switch-Rocker
7	135-6052	1	Switch-Ignition
8	135-6054	1	Switch-Push Button
9	135-6113	1	Harness-Main
9:1	135-6270	1	Relay-Mini ISO Pwr, 5M
10	135-6114	1	Cable-Positive
11	135-6115	1	Wire-Solenoid
12	135-6116	1	Cable-Ground
13	135-6117	1	Cable-Positive
15	135-6121	1	Switch-Op
16	135-6120	1	Harness, Alternator
17	135-2304	1	Insulator-Battery
18	135-6119	1	Cable-Positive
19	135-6189	1	Solenoid-Starter
20	135-6443	1	Harness-Striker
21	32160-008	1	Connector-Carling, 8F
22	32160-072	1	Connector-Wp,2M

Ref.	Part Number	Qty.	Description
23	135-6108	2	Nut-Hex Flg 1/4-20 Nyloc SS
24	135-6221	2	Screw-HHF 1/4-20 X 3/4 Serrated SS
25	126-0759	2	Washer-Flat
26	135-6357	2	Screw-HSH M4-0.7 X 10Mm
27	126-0695	2	Screw-Carriage 5/16-18 X 3/4 SS
28	135-6109	2	Nut-Hex Flg 5/16-18 Nyloc SS
29	104-7201	2	Nut-Nyloc 1/4-20 Flg
30	135-6356	1	Screw-HH #10-24 X 3/4 SS
31	135-6342	1	Nut-Hex Flg #10-24 Nyloc SS
32	1-543393	4	Insulator-Solenoid
33	3290-378	11	Tie-Cable
34	135-8898	1	Cable-Sensor, Trail Tech
35	135-8903	1	Magnet-Speedometer
36	135-7557	1	Strip-Trim, 3.5"
37	135-3998	1	Harness-Wire, Jumper
99	135-7317	1	Manual-User, Striker ●
99	135-7318	1	Card-Striker, Quick Start ●

● Not illustrated

Motion Control Assembly

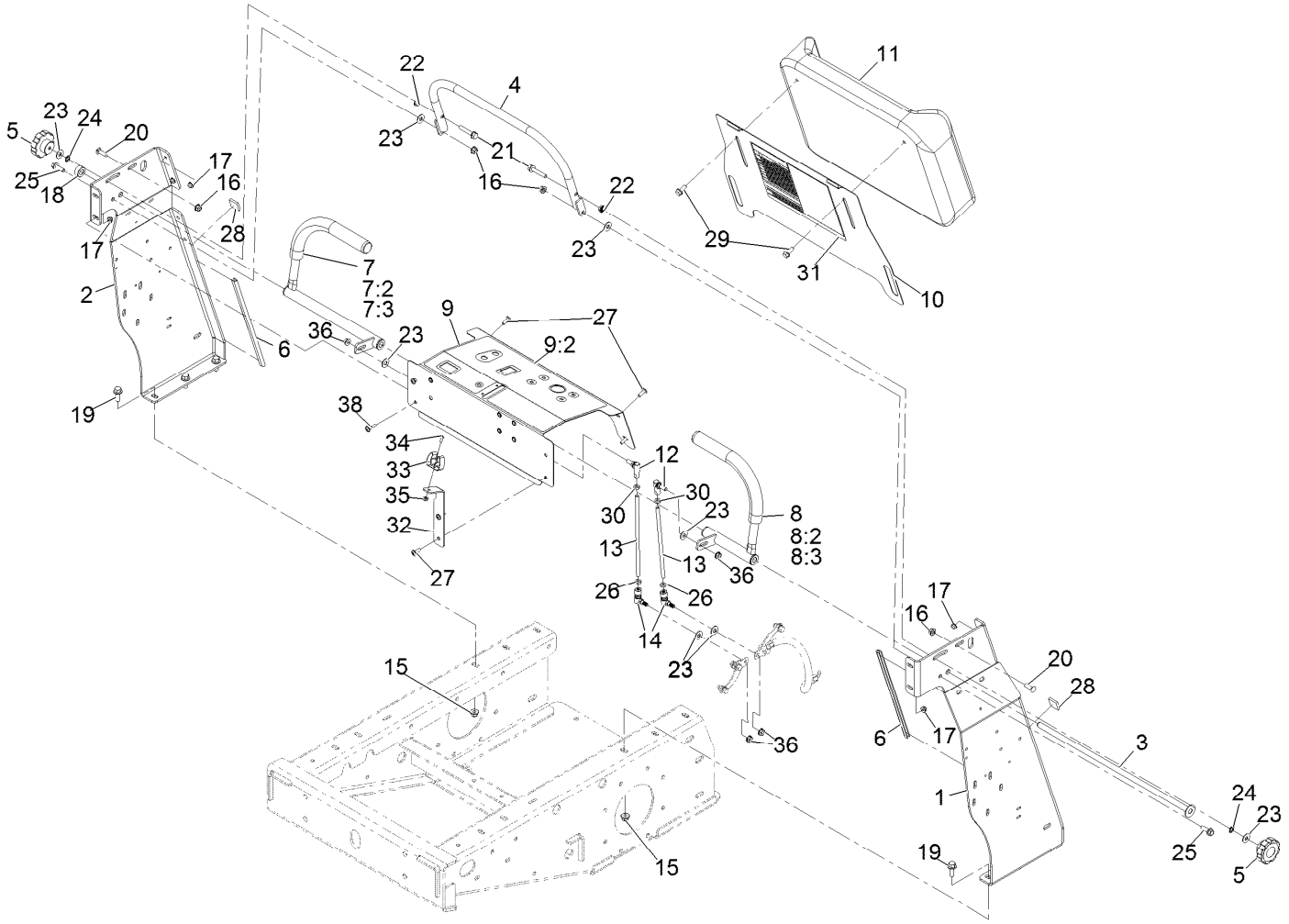

Motion Control Assembly (continued)

Ref.	Part Number	Qty.	Description
1	135-5423-05	1	Upright-Tower, Lt [blk-Txt]
2	135-5425-05	1	Upright-Tower, Rt [blk-Txt]
3	135-5430	1	Rod-Pivot, Joy Stick
4	135-5427-05	1	Bar-Speed [blk-Txt]
5	135-5689	2	Knob-Fluted
6	135-5336	2	Strip-Trim, 12.0 Inch
7	135-5738	1	Stick-Joy, Rt
7:2	1-633257	1	Grip-Control, Motion
7:3	135-5694	2	Bushing-Flange
8	135-5739	1	Stick-Joy, Lt
8:2	1-633257	1	Grip-Control, Motion
8:3	135-5694	2	Bushing-Flange
9	142-3142	1	ASM-Panel, Control
9:2	135-6223	1	Decal-Panel, Control
10	135-5498-05	1	Plate-Pad, Knee
11	135-7884	1	Pad-Knee
12	135-5257	2	Balljoint-SS
13	135-5681	2	Rod-Control, Motion
14	135-5718	2	Ball Joint-Quick Disconnect, SS
15	135-6110	6	Nut-Hex Flange
16	135-6109	4	Nut-Hex Flange
17	135-6108	8	Nut-Hex Flange
18	135-6192	1	Collar
19	135-6208	6	Screw-HHF
20	HDW17294	2	Bolt,Carriage,5/16-18X1,ST/ST 18-8
21	135-5779	2	Screw-HHF
22	118-1722	2	Nut-Hex Flange
23	HDW14535	8	Flat Washer, 5/16 Nom,ST/ST,18-8
24	135-6286	2	Washer-Lock
25	135-6272	2	Screw-HHF
26	107-0282	2	Nut-Hex
27	135-7080	6	Screw-Hsbhf
28	93-9155	2	Velcro
29	126-2712	2	Screw-HHF
30	135-6512	2	Nut-Hex
31	142-3313	1	Decal-Chart, Spray
32	135-5506-05	1	Mount-Gun
33	135-5661	1	Holder-Tool, Clip
34	135-6374	1	Screw-HSBH
35	135-6342	1	Nut-Hex Flange
36	107-0380	4	Nut-HHF
38	135-7081	2	Screw-Hsbhf

Tire and Wheel Assembly

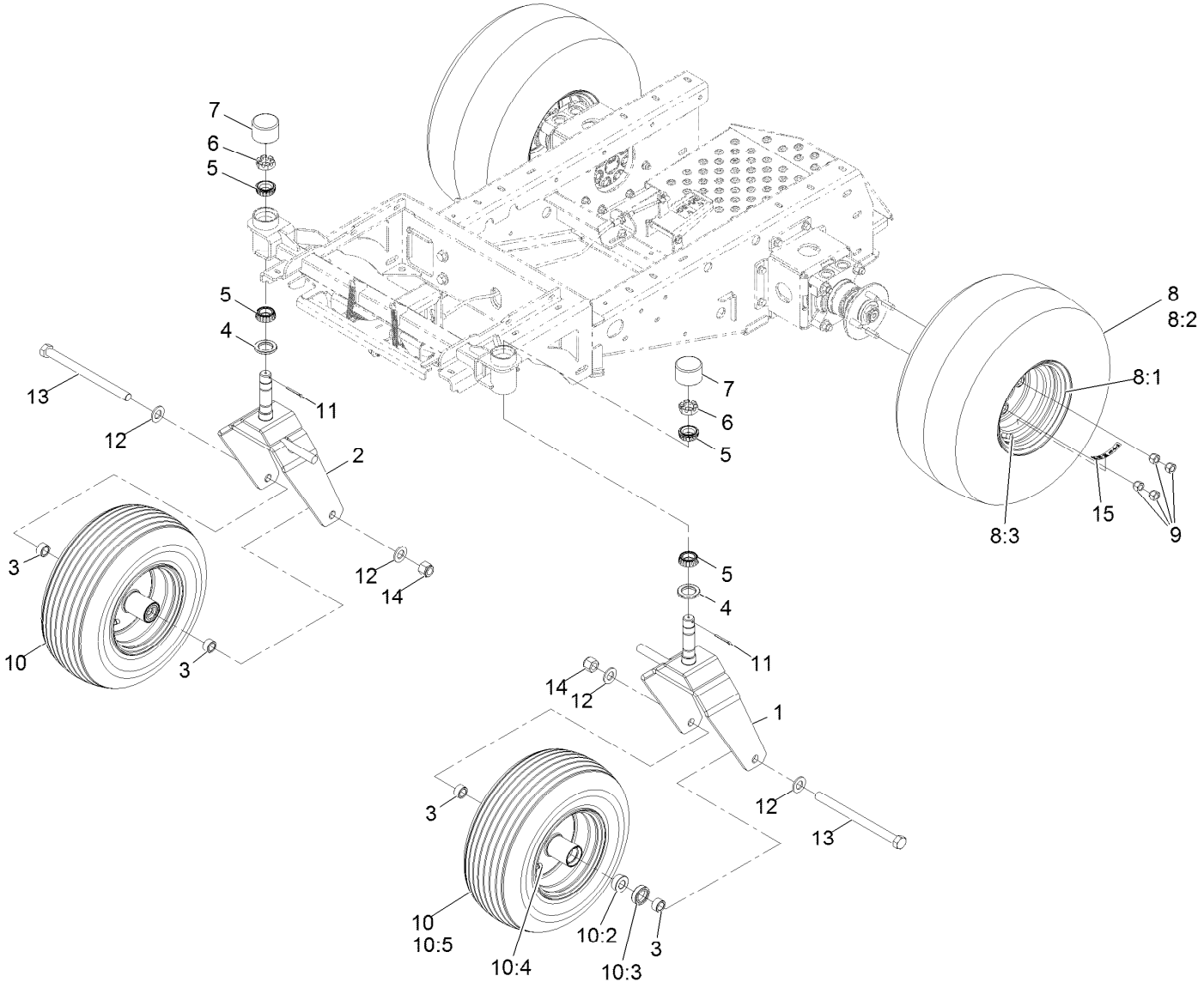

Tire and Wheel Assembly (continued)

Ref.	Part Number	Qty.	Description
1	135-5441-05	1	Caster-Lt [blk-Txt]
2	135-5446-05	1	Caster-Rt [blk-Txt]
3	135-5683	4	Spacer-Axle
4	1-543511	2	Seal-Grease
5	254-92	4	Cone-Bearing, Outer
6	1-809082	2	Nut-SHH
7	135-5756	2	Cap-Dust, Rubber
8	135-5968	2	Wheel And Tire ASM
8:1	135-5969	1	Rim-8 X 7, Black
8:2	120-6466	1	Tire
8:3	232-27	1	Stem-Valve
9	242-50	8	Nut-Lug
10	135-5974	2	Wheel And Tire ASM
10:2	1-633585	2	Bearing-Cone, Taper
10:3	103-0063	2	Seal-Caster
10:4	5108	1	Valve
10:5	135-5976	1	Tire-Rib
11	135-6292	2	Pin-Cotter
12	3256-28	4	Washer-Flat
13	135-6300	2	Screw-HH
14	3296-51	2	Nut-Lock, NI
15	126-2055	2	Decal-Torque, Wheel Hub Lug

Fuel Assembly

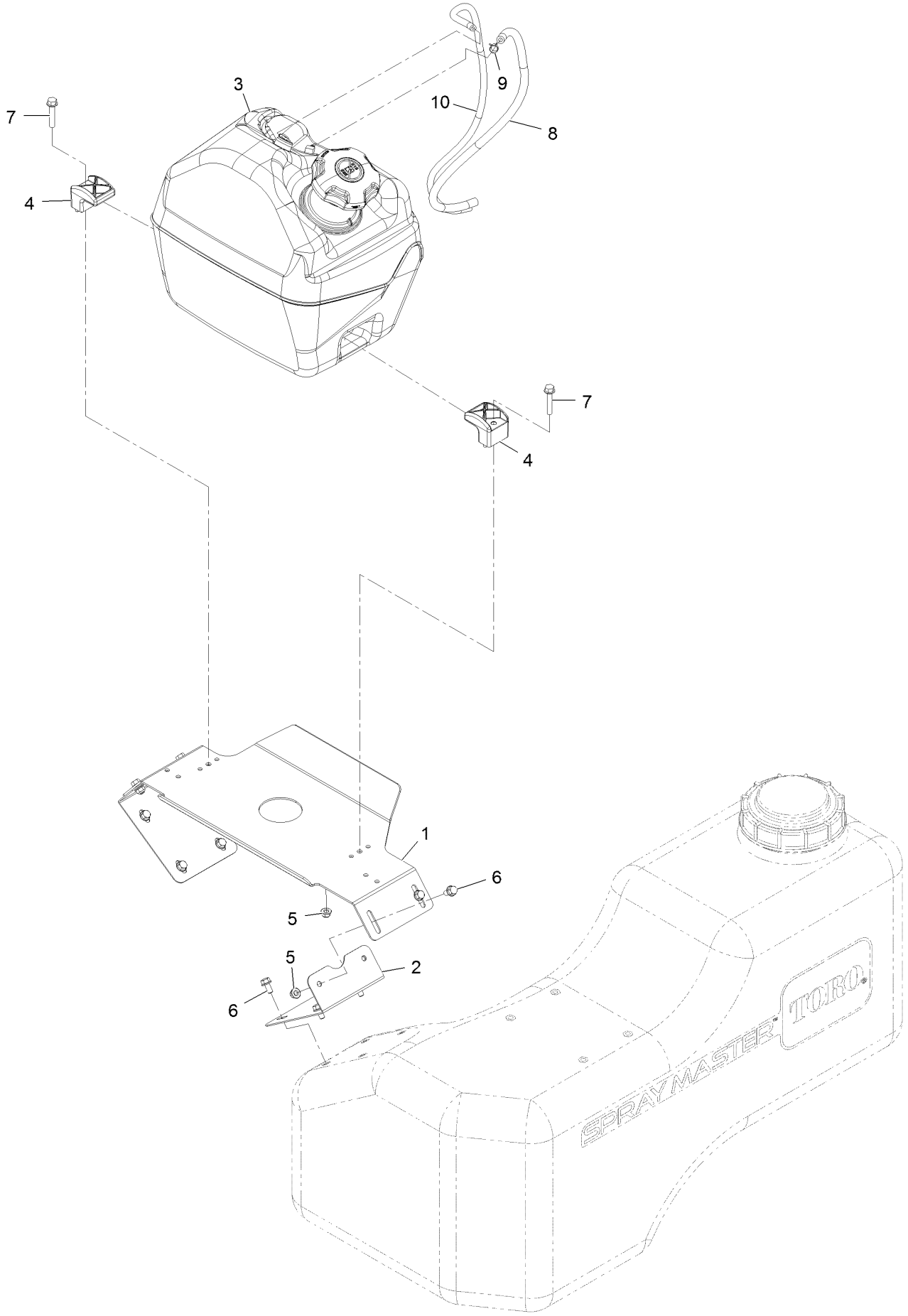

Fuel Assembly (continued)

Ref.	Part Number	Qty.	Description
1	142-2975	1	Support-Fuel Tank
2	135-5555	2	Bracket-Support, Gas Tank
3	140-4343	1	Fuel Tank ASM, 5 Gal
4	107-4543	2	Clamp
5	135-6109	6	Nut-Hex Flg 5/16-18 Nyloc SS
6	135-7086	12	Screw-HHF 5/16-18 X 5/8 Serrated SS
7	135-5779	2	Screw-HHF 5/16-18 X 1 3/4 Serrated SS
8	109-1395	1	Hose-Fuel Line 27"
9	2412-98	1	Clamp-Hose
10	117-9569	1	Hose-Fuel

Fuel Tank Assembly No. 140-4343

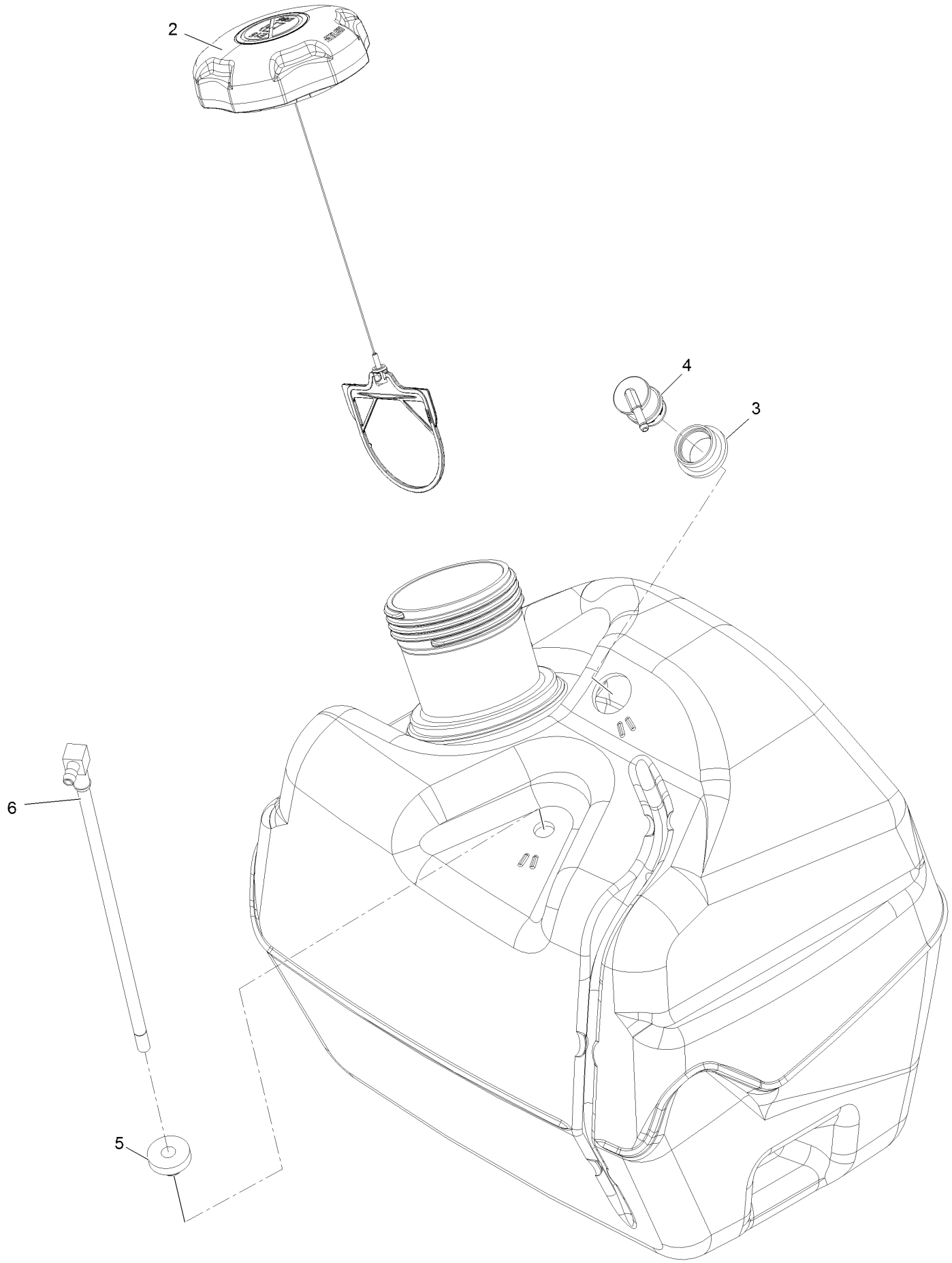

Fuel Tank Assembly No. 140-4343 (continued)

Ref.	Part Number	Qty.	Description
2	137-4119	1	Cap-Fuel, Ratcheting
3	114-0284	1	Grommet
4	119-3547	1	Valve-Vent, Fuel
5	46-6560	1	Bushing
6	109-9364	1	Fitting-Fuel (W/Line And Screen)

Spray System Assembly

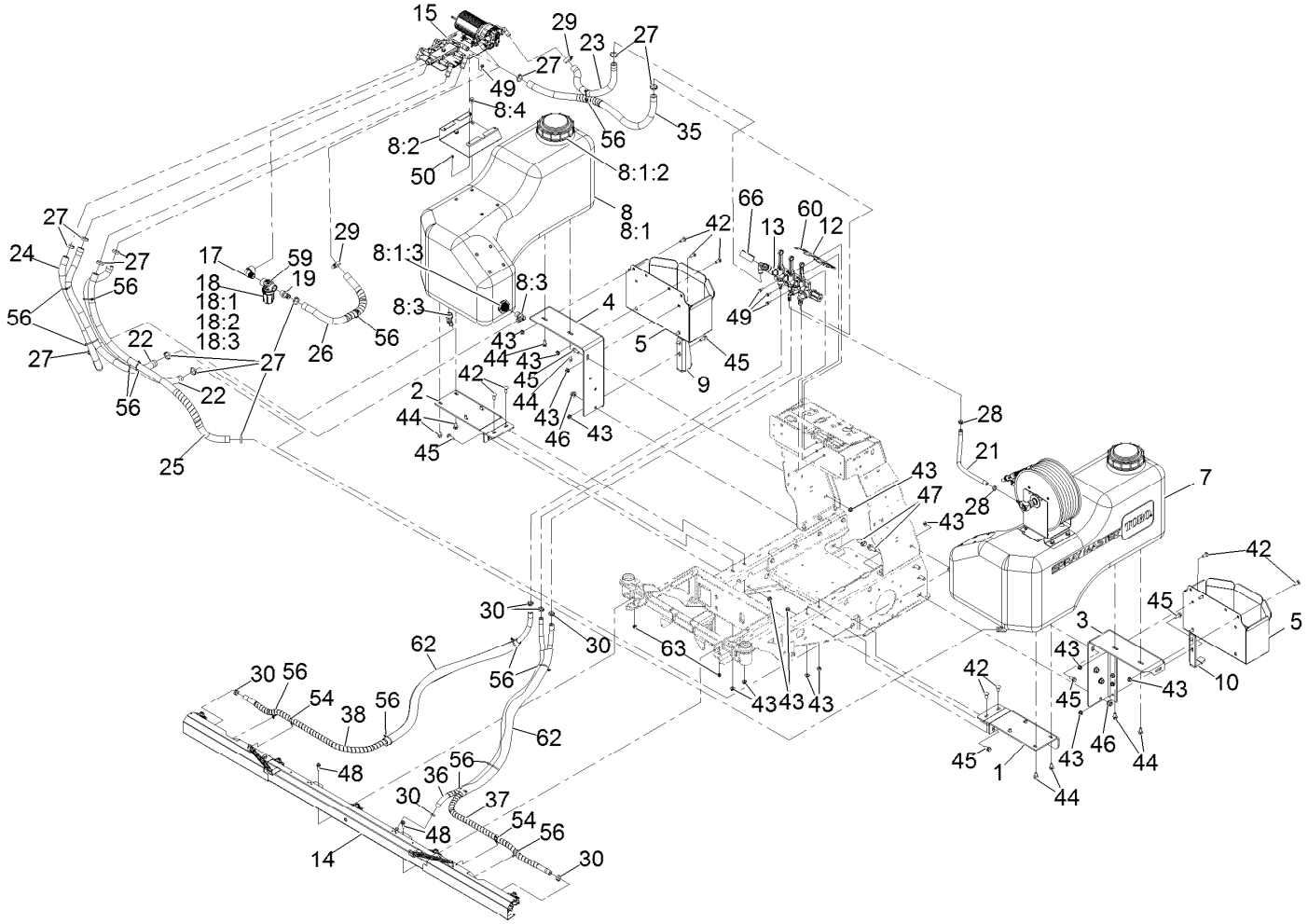

Spray System Assembly (continued)

Ref.	Part Number	Qty.	Description
1	135-5495	1	Mount-Tank, LH
2	135-5496	1	Mount-Tank, RH
3	135-5395	1	Mount-Box, Lt
4	135-5397	1	Mount-Box, Rt
5	142-2436	2	Box-Fert, Max
7		1	ASM-Tank Hose Reel ■
8		1	ASM-Tank Rt ■
8:1	135-7870	1	ASM-Tank, Rt
8:1:2	135-5916	1	Cap-Tank, Spray
8:1:3	126-4393	2	Fitting-Bulkhead
8:2	135-5546	1	Mount-Platform, Liquid Valve
8:3	135-5772	2	Fitting-Elbow, 90
8:4	135-7096	4	Screw-HHF
9	135-5408	1	Bracket-Tip, Anti (Rt)
10	135-5406	1	Bracket-Tip, Anti (Lt)
12	135-5570-05	1	Bracket-Manifold
13		1	ASM-Manifold ■
14		1	ASM-Boom, Spray ■
15		1	ASM, Liquid Valve ■
17	132-7706	1	Elbow-90 DEG
18	135-5765	1	Strainer-Inline
18:1	126-7195	1	Bowl-Strainer
18:2	126-2272	1	Gasket-Head, Line Strainer
18:3	135-5766	1	Screen-Strainer, 50 Mesh
19	41257	1	Hosebarb
21	135-5321	1	Hose-Spray
22	135-6163	2	Hose-Spray
23	135-5324	1	Hose-Spray
24	135-5326	1	Hose-Spray
25	135-5327	1	Hose-Spray, Wrapped
26	135-5325	1	Hose-Spray, Wrapped
27	135-5890	12	Clamp-Oetiker, 167
28	135-5757	2	Clamp-Oetiker, 167
29	2412-129	2	Clamp-Hose
30	135-5692	6	Clamp-Oetiker, 167
35	135-6480	1	Hose-Spray, Wrapped
36	135-5294	1	Hose-Spray, Wrapped
37	135-5295	1	Hose-Spray, Wrapped
38	135-5296	1	Hose-Spray, Wrapped
42	126-0980	12	Screw-CARR
43	135-6110	22	Nut-Hex Flange
44	135-6274	12	Screw-HHF
45	135-6208	10	Screw-HHF
46	135-6111	6	Nut-Hex Flange
47	135-6207	6	Screw-HHF
48	135-6272	2	Screw-HHF
49	135-6221	7	Screw-HHF
50	135-6108	4	Nut-Hex Flange
54	32180-030	2	Clip-Tie
56	3290-378	14	Tie-Cable
59	135-6424	1	Decal-Cap, Strainer
60	135-6285	1	Decal-Valve, Boom
62	135-6484	2	Guard-Mesh
63	135-6109	2	Nut-Hex Flange
66	142-3437	1	Gauge-Plain
99	3290-379	3	Tie-Cable ●

● Not illustrated

■ Not serviced separately

Tank Hose Reel Assembly

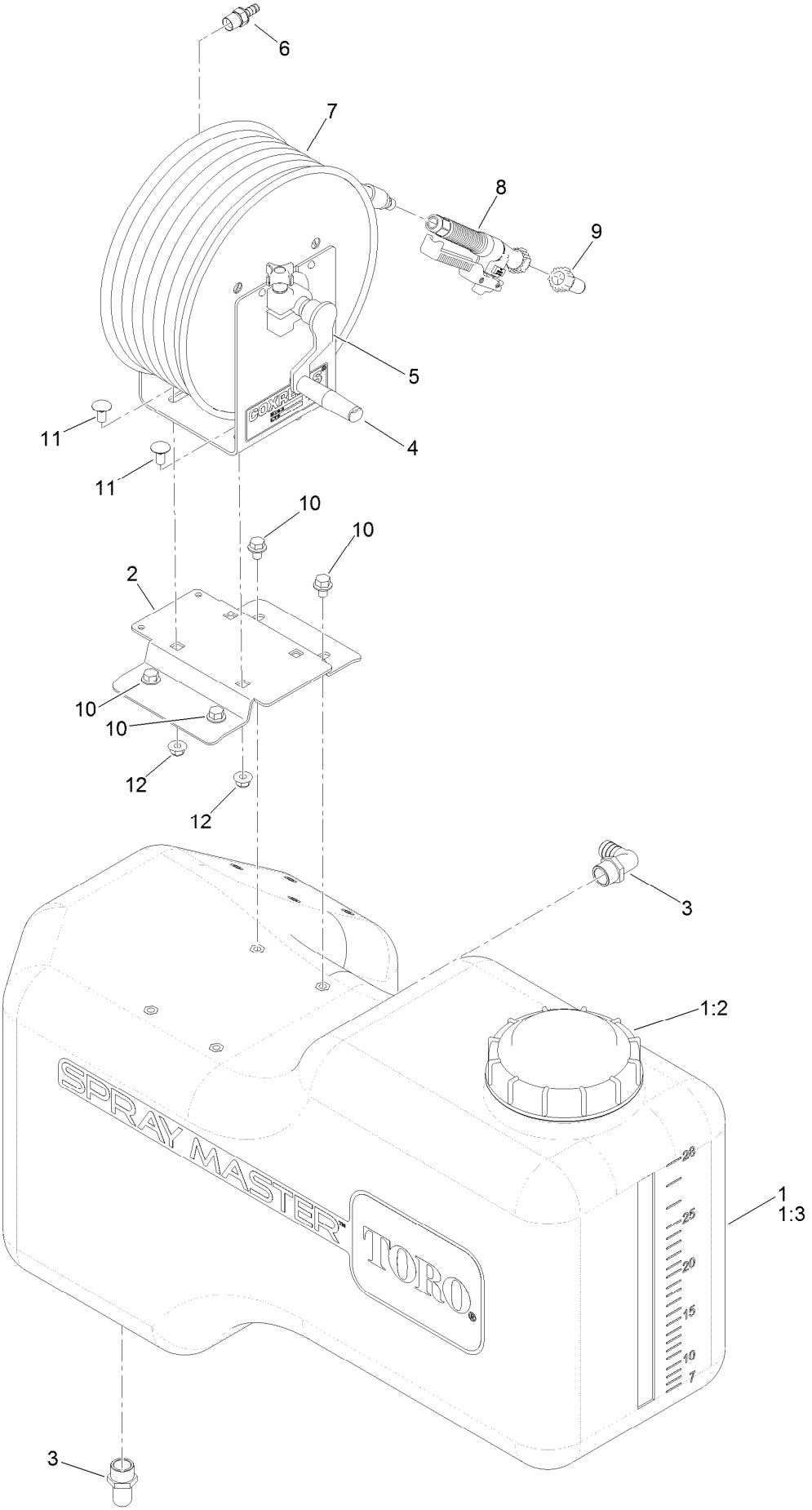

Tank Hose Reel Assembly (continued)

Ref.	Part Number	Qty.	Description
1	135-7868	1	ASM-Tank, Lt
1:2	135-5916	1	Cap-Tank, Spray
1:3	126-4393	2	Fitting-Bulkhead
2	135-5497	1	Mount-Reel, Hose
3	135-5772	2	Fitting-Elbow, 90
4	135-5787	1	Reel-Hose
5	135-6011	1	Crank-Reel
6	1-513200	2	Fitting,Male
7	135-5794	1	Hose-Spray, 75'
8	135-5773	1	Gun-Spray, Spot
9	135-5778	1	Tip-Spray, #12 Spot
10	135-7096	4	Screw-HHF
11	135-6271	4	Screw-Carriage
12	135-6110	4	Nut-Hex Flange
13	135-5757	1	Clamp-Oetiker, 167 ●

● Not illustrated

Reel Hose Assembly

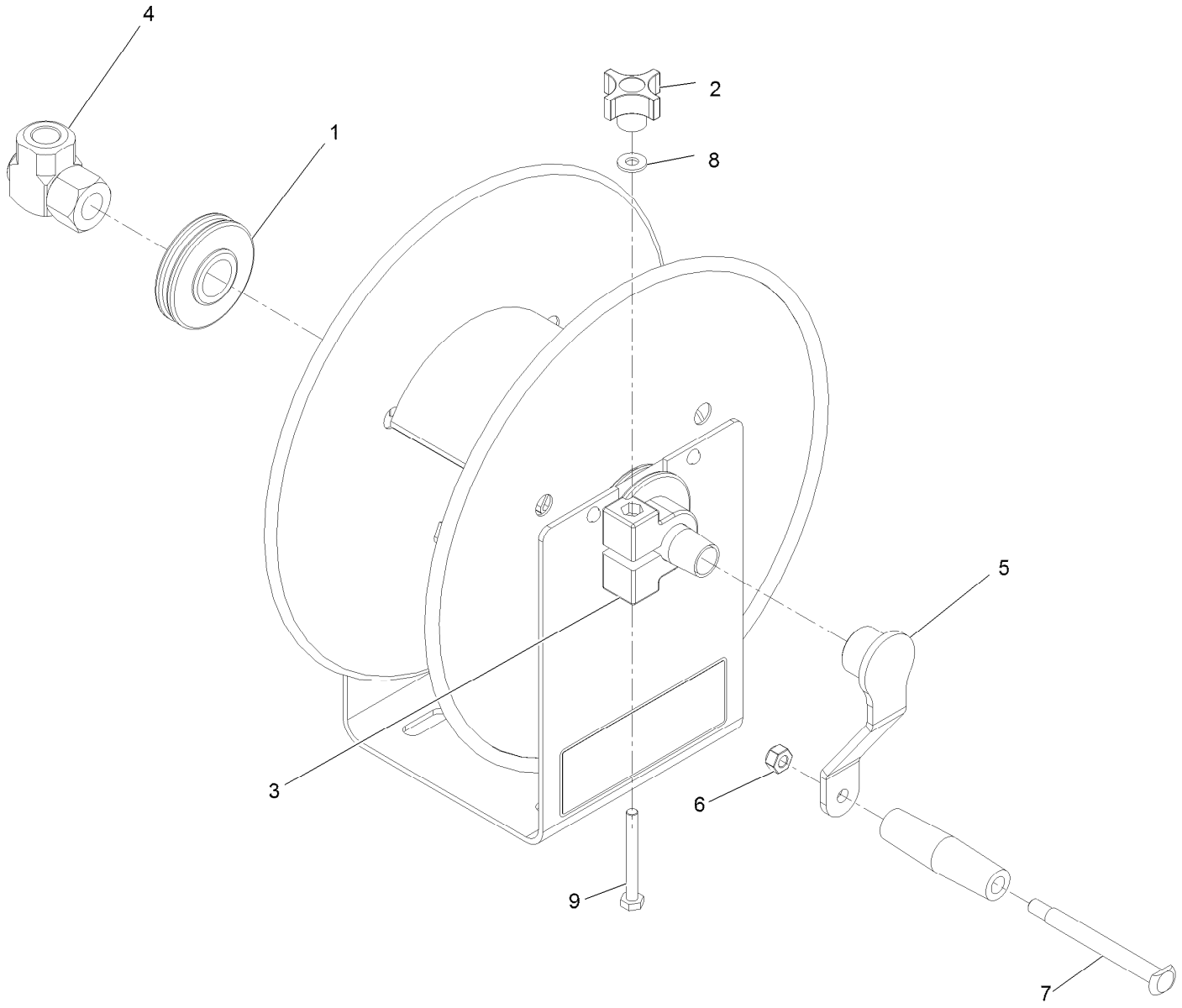

Reel Hose Assembly (continued)

Ref.	Part Number	Qty.	Description
1	135-8439	1	Plastic Bearing
2	135-8437	1	Hose Reel Brake Knob
3	135-8438	1	Brake/Bearing 6329-1-1
4	135-8421	1	Swivel 3/8" Npt
5	135-6011	1	Crank-Reel
6	119-4038	1	Nut-Hex Nyloc 5/16-18
7	135-8436	1	Bolt, Hose Reel Handle
8	120-9679	1	Washer-Flat
9	321-18	1	Screw-HH 1/4-20 X 2 1/4

Manifold Assembly

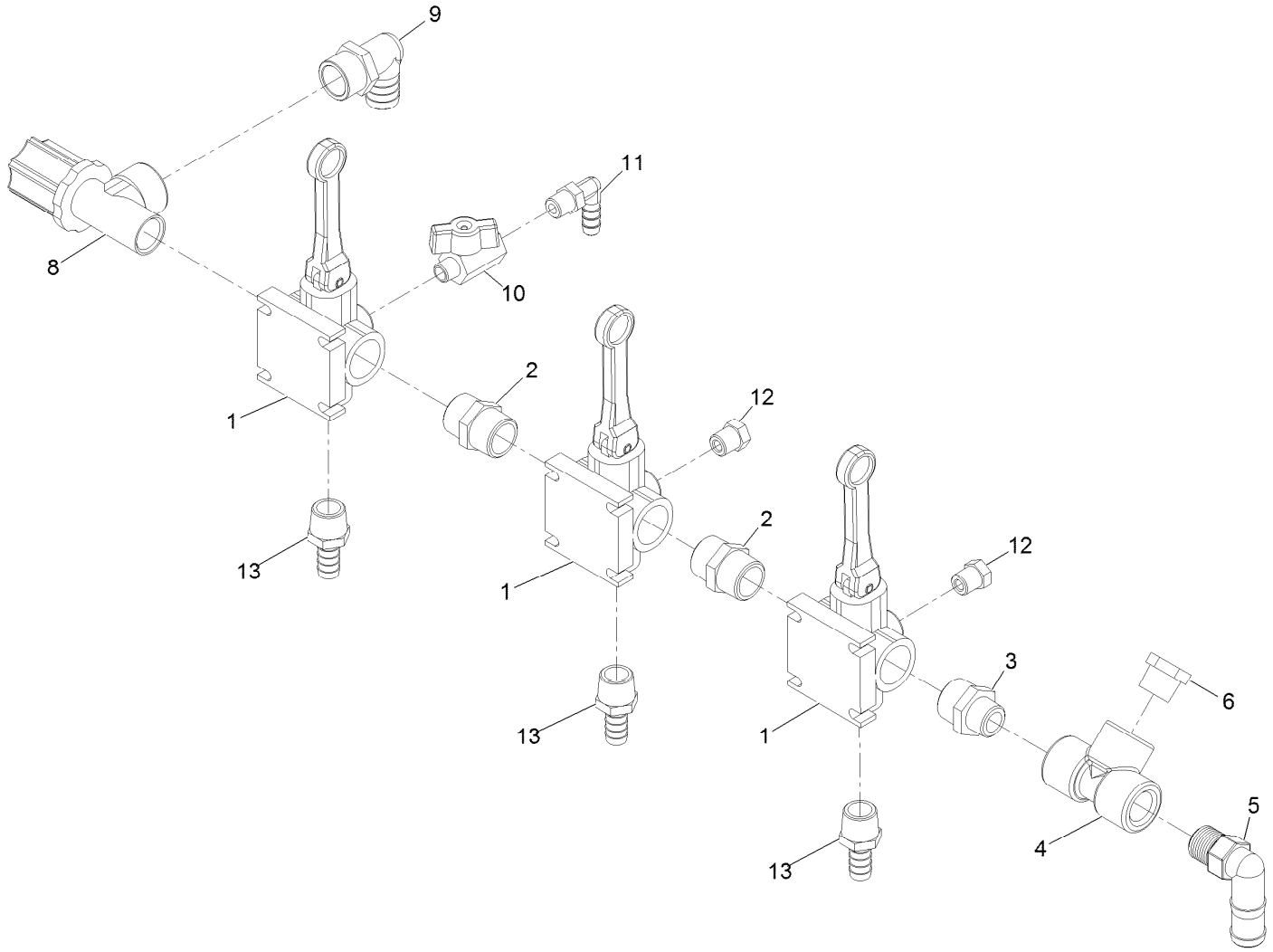

Manifold Assembly (continued)

Ref.	Part Number	Qty.	Description
1	135-5721	3	Valve-Directo
2	135-5741	2	Fitting-Nipple
3	135-5742	1	Fitting-Nipple
4	94-7100	1	Tee
5	92-8557	1	Elbow-90
6	135-5743	1	Fitting-Reducer
8	135-5736	1	Valve-Throttle
9	135-5772	1	Fitting-Elbow, 90
10	135-5737	1	Valve-Chrome, 1/4
11	135-5745	1	Fitting-Elbow, 90
12	135-5735	2	Plug-Valve
13	120-8671	3	Fitting-Hosebarb

Spray Boom Assembly

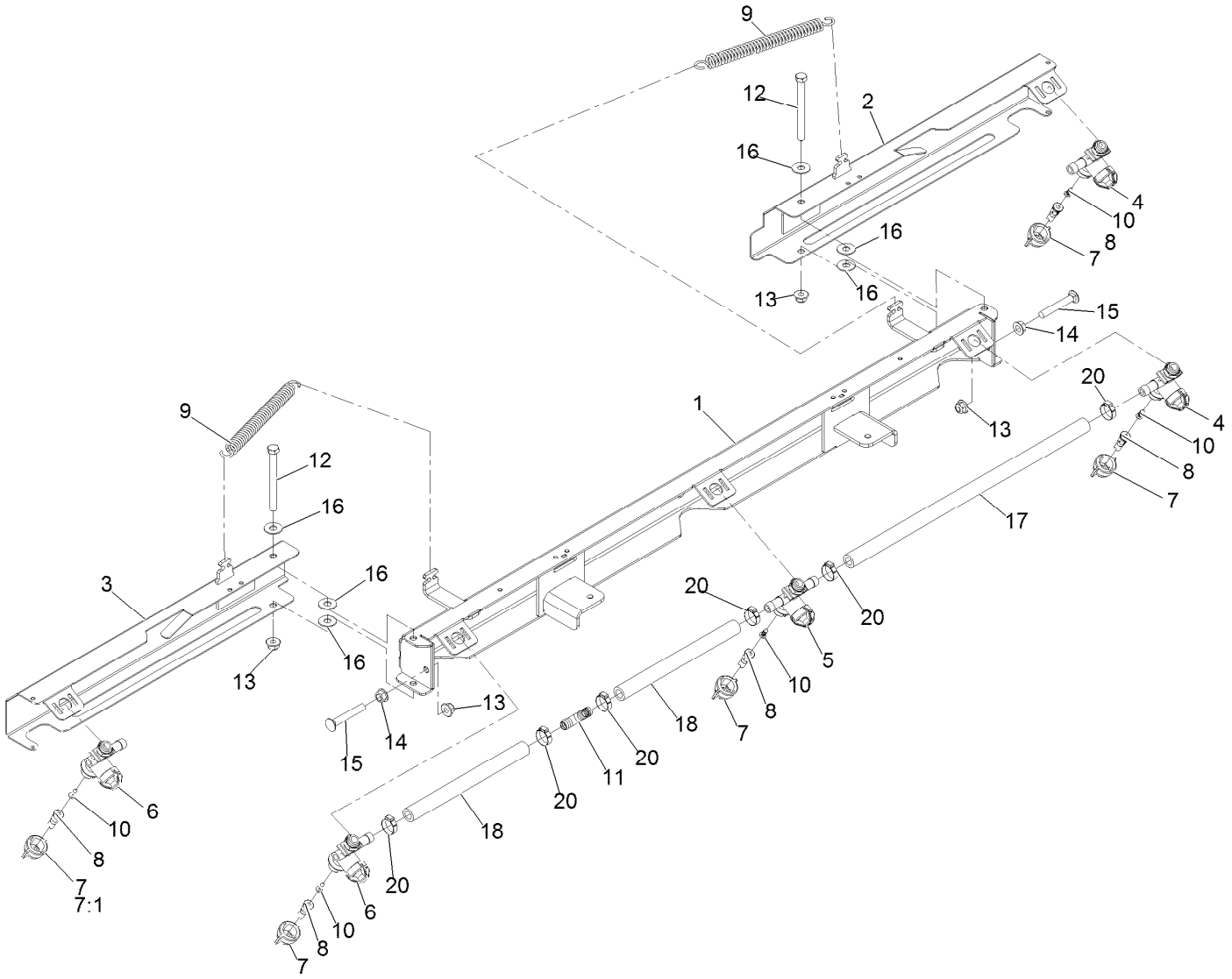

Spray Boom Assembly (continued)

Ref.	Part Number	Qty.	Description
1	135-5409	1	Boom-Center
2	135-5415	1	Boom-Wing, Rt
3	135-5419	1	Boom-Wing, Lt
4	135-5790	2	Body-Nozzle, Right
5	135-5789	1	Body-Nozzle, Center
6	135-5788	2	Body-Nozzle, Left
7	135-5781	5	Cap-Nozzle
7:1	40998	1	Seat-Gasket
8	142-3308	5	Tip-Spray, 025
9	135-5780	2	Spring-Extension
10	126-3943	5	Strainer-Nozzle, 50M 5PSI Check

Ref.	Part Number	Qty.	Description
11	138-2751	1	Fitting-Tee, Barb
12	135-6310	2	Screw-HH 3/8-16 X 4 SS
13	135-6110	4	Nut-Hex Flg 3/8-16 SS W/Patch SS
14	135-6806	2	Nut-Hex Flange 3/8-16 Serrated SS
15	126-0702	2	Bolt-Carriage 3/8-16 X 2 1/2 SS
16	1126	6	Washer-Flat
17	135-7106	1	Hose-Spray
18	135-7105	2	Hose-Spray
20	135-5692	6	Clamp-Oetiker, 167

Liquid Valve Assembly

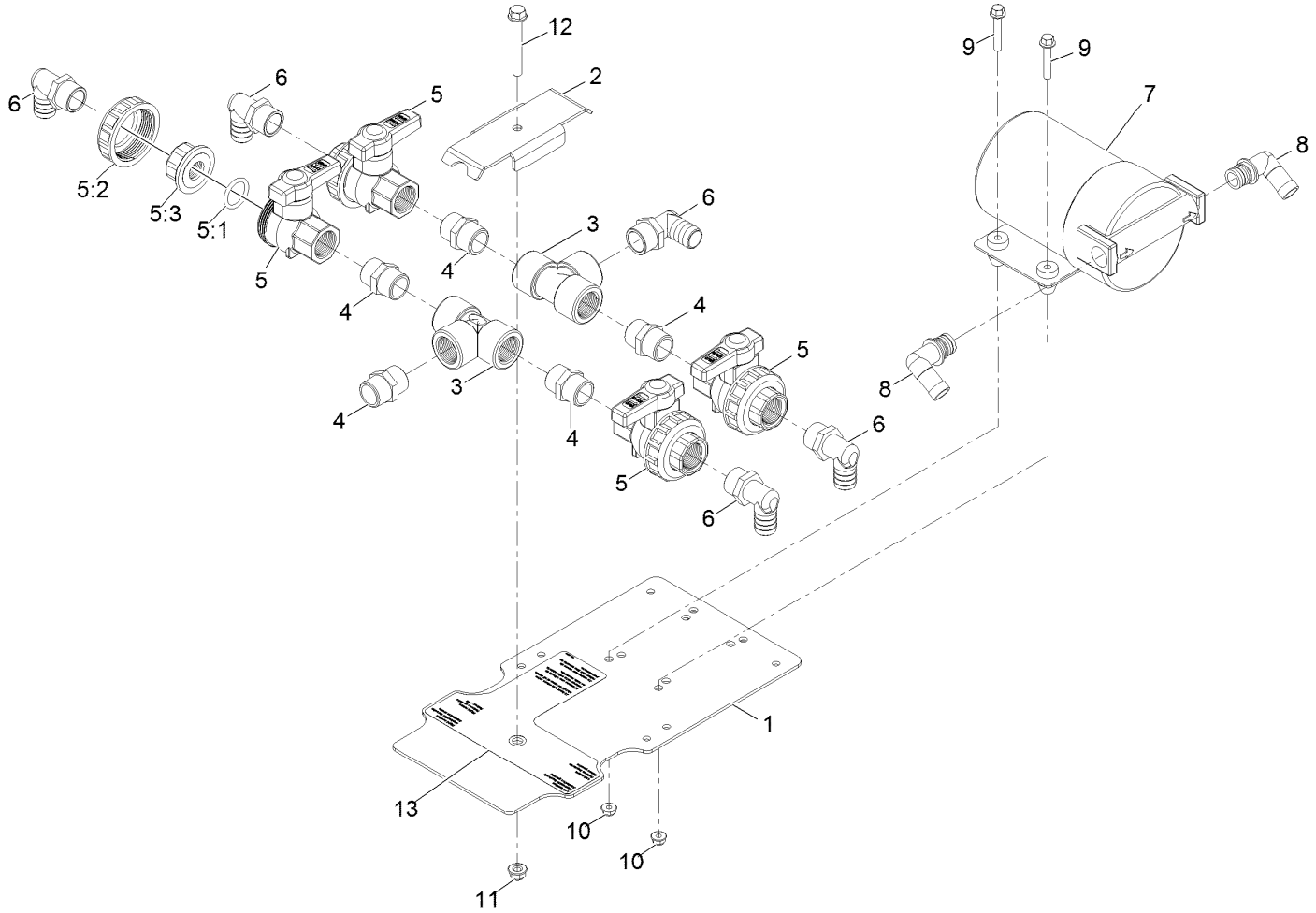

Liquid Valve Assembly (continued)

Ref.	Part Number	Qty.	Description
1	135-5491	1	Mount-Plate, Liquid Valve
2	135-5504	1	Plate-Clamp, Liquid Valve Fittings
3	135-6004	2	Fitting-Tee
4	135-5741	5	Fitting-Nipple
5	135-6002	4	Valve-Union, 3/4
5:1	135-6006	1	O-Ring
5:2	135-6007	1	Ring-Valve, Union 3/4
5:3	135-6008	1	Adapter-Uv, 3/4
6	135-5772	5	Fitting-Elbow, 90
7	135-8324	1	7.0 Remco Pump
8	135-6003	2	Fitting-Elbow, 3/4Qd X 3/4Barb
9	135-6320	4	Screw-HHF 1/4-20 X 1 1/2 Serrated SS
10	135-6108	4	Nut-Hex Flg 1/4-20 Nyloc SS
11	135-6109	1	Nut-Hex Flg 5/16-18 Nyloc SS
12	135-6323	1	Screw-HHF 5/16-18 X 2 1/2 Serrated SS
13	135-6420	1	Decal-Valve, Tank

Hopper Assembly

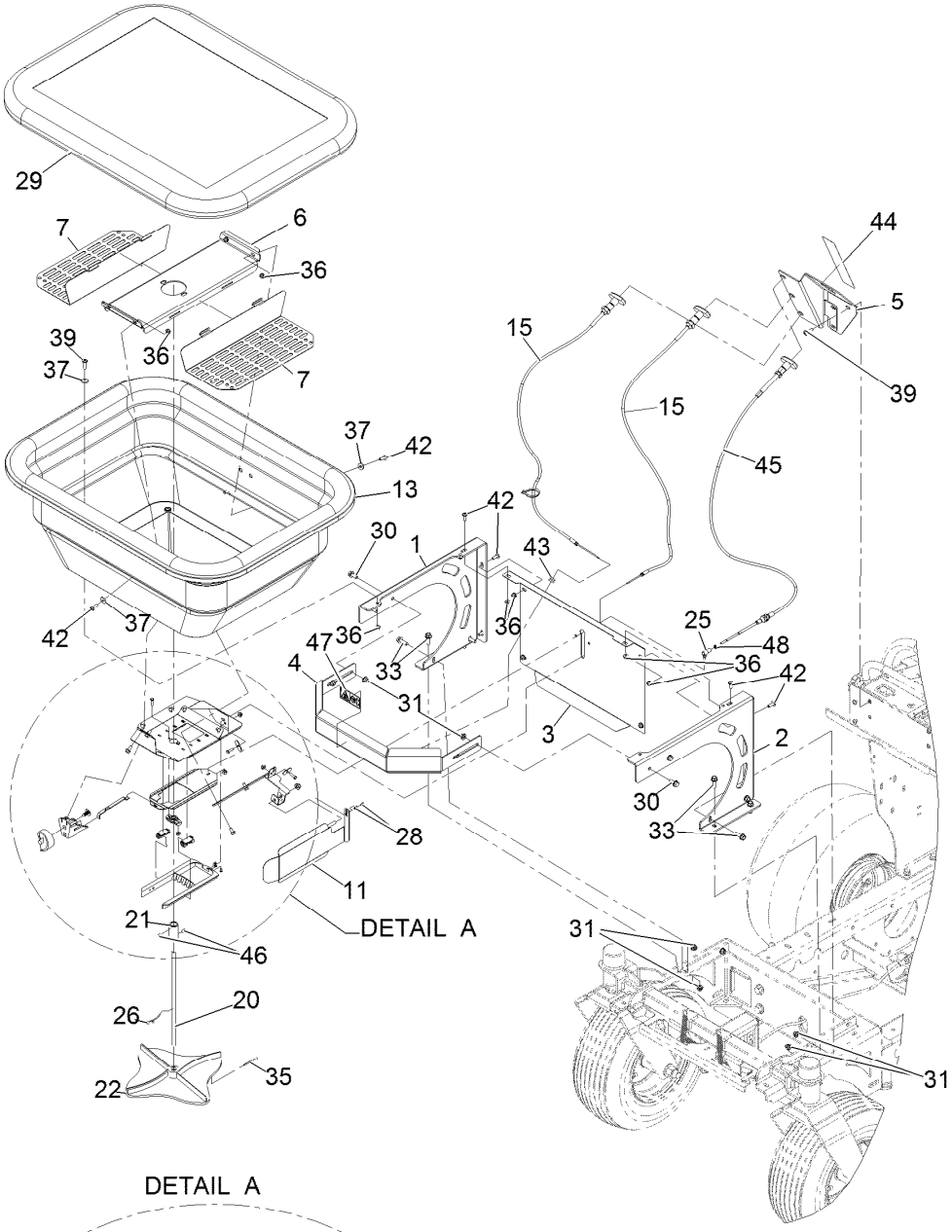

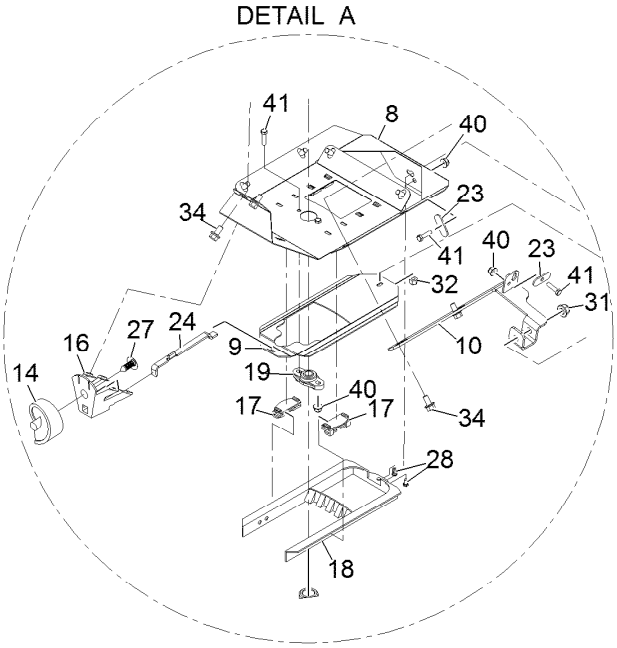

Hopper Assembly (continued)

Ref.	Part Number	Qty.	Description
1	135-5391	1	Side-Hopper, Rt
2	135-5393	1	Side-Hopper, Lt
3	135-5571	1	Backshield-Hopper
4	135-5567	1	Bumper-Front, Hopper
5	142-3283-05	1	Mount-Speedometer
6	135-5542	1	Pan-Hopper, 220
7	135-5544	2	Screen-Hopper, 220
8	135-5572	1	Plate-Base, Hopper
9	135-5573	1	Slide-Door, Hopper
10	135-5388	1	Mount-Deflector, Side
11	135-5589	1	Deflector-Side, Spreader
13	135-5985	1	Hopper-220Lb
14	126-0988	1	Dial
15	135-5931	2	Cable-Push/Pull
16	126-0985	1	Mount-Dial
17	126-0990	4	Guide-Rate, Gate
18	126-0991	1	Diffuser
19	135-5943	1	Bearing-Flange
20	135-5936	1	Shaft-Hopper, 220
21	135-5937	1	Coupler-SS
22	135-5954	1	Spinner-Spreader
23	135-5569	2	Retainer, Cable
24	135-5965	1	Linkage-Gate, Rate
25	135-5682	1	Ball Joint-SS
26	135-5957	1	Wire-Agitator
27	126-0986	1	Clip
28	135-5961	2	Retainer-Cable, Wire
29	135-7981	1	Cover-Hopper, Large
30	126-2712	4	Screw-HHF
31	135-6109	13	Nut-Hex Flange
32	HDW05856	1	Nut-NYL Lock,#10-32,ST/ST 18-8
33	135-6272	8	Screw-HHF
34	135-6280	8	Screw-HHF, 1/4-20 X 1/2, Ser Flg, SS
35	135-6340	1	Pin-Cotter
36	135-6108	14	Nut-Hex Flange
37	135-6341	8	Washer
39	135-7081	5	Screw-Hsbhf
40	135-6342	4	Nut-Hex Flange
41	135-6356	4	Screw-HH
42	135-7080	10	Screw-Hsbhf
43	135-5988	1	Grommet-Rubber
44	142-3351	1	Decal-Hopper Control
45	135-5935	1	Cable-Push/Pull
46	3241-7	2	Screw-SQH
47	135-6725	1	Decal-Dismemberment Hazard
48	520-0019	1	Nut-Hex, Jam
50	3290-378	1	Tie-Cable ●

● Not illustrated

Attachments and Accessories

For 34237 52in (7 GPM) Sprayer Spray Master Max

Product Name	Model/Part
Foam Marker Kit	135-6663
7 Gallon Auxiliary Tank Kit	142-2269
7 Gallon Isolated Tank Kit	142-2270
30 Gallon Auxiliary Tank Kit	142-2271
Tip-Spray, 015	142-3306
Tip-Spray, 02	142-3307
Tip-Spray, 025	142-3308
Tip-Spray, 03	142-3309
Tip-Spray, 04	142-3310
Tip-Spray, 05	142-3311
Tip-Spray, 06	142-3312

Notes:

Notes:

Notes:

TORO®

Count on it.